उत्कर्ष UTKARSHA

(A Joint Venture Company of NALCO and MIDHANI)

UTKARSHA ALUMINIUM DHATU NIGAM LIMITED

PO-KANCHANBAGH, HYDERABAD, TELANGANA – 500 058, INDIA

INSTALLATION OF HIGH END ALUMINIUM ALLOY MELTING, CASTING AND FLAT ROLLED PRODUCTS PRODUCTION FACILITY AT NELLORE, ANDHRA PRADESH

TENDER SPECIFICATION

FOR

HIGH END ALUMINIUM ALLOY MELTING AND CASTING PLANT (PACKAGE NO. – 01)

VOLUME – I OF II
(COMMERCIAL)

MECON LIMITED
RANCHI – 834002

MEC/UADNL/11/35/Q7R6/TS/01/R0 **June' 2022**

LIST OF VOLUMES/SECTIONS OF THE TENDER DOCUMENTS

SECTIONS	DESCRIPTION OF TENDER DOCUMENT	PAGE NO.
Volume-I : Tender Specifications – Commercial		
Section-I :	Notice Inviting Tender	1-11
Section-II :	General Instructions to Bidders	1-29
Section-III :	Contract Agreement	1-16
	Appendix-1 : Price Schedule	7
	Appendix- 2 : Time schedule	8-9
	Appendix-3 : Terms of Payment	9-16
Section-IV :	Evaluation Procedure	1-8
Section- V :	Special Conditions of Contract	1-15
Section-VI	General Conditions of Contract	1-83
Section-VII	Formats & Annexures	1-35
	Annexure- 1: Procedure to be followed for submission of bid	2
	Annexure 2 : Integrity Pact	3-8
	Annexure 3 : Specimen Forms of bank guarantee 1. Bank Guarantee For Earnest Money Deposit 2. Form of Bank Guarantee in lieu of Security Deposit 3. Bank Guarantee to secure the initial advance payment 4. Bank Guarantee for GA Drawings 5. Bank Guarantee For Lot wise supplies 6. Performance Bank Guarantee	9-20
	Annexure 4 : Consortium Agreement	21-24
	Annexure 5 : Draft Letter of Credit Format	25-26

© 2022 MECON LIMITED. All rights reserved

	Annexure 6 : Self Certification and Undertaking by Bidder	27
	Annexure-7 Bidders Shall Submit Compliance Of The Clauses Given Below in Their Offer.	28-30
	Annexure-8 Preference To Make In India And Granting Of Purchase Preference To Class-I Local Suppliers	31-35
Volume-II (Tender Specification – Technical)		
General Technical Specifications		

NOTICE INVITING TENDER

Global Tender Enquiry (GTE)

M/s Utkarsha Aluminium Dhatu Nigam Limited (UADNL), Nellore in Andhra Pradesh, invites **sealed bids** on global tender enquiry under single stage two part bid system (Part-I: Techno- Commercial Bid-Un-priced and Part-II: Price Bid) from reputed, experienced and financially sound parties for the work of "High End Aluminium Alloy Melting and Casting Plant".

Tender Notice No. : UADNL/ADVT/GTE/PKG-01/0622/01 Date: 04/06/2022

Start of Issue of Tender Documents:	**04/06/2022 at 17.30 Hrs.**
Pre-Bid Meeting Date:	**20/06/2022 at 11.00 Hrs.**
Receipt of Tender on or before:	**11/07/2022 at 17.30 Hrs.**
Opening of Tender Date:	**12/07/2022 at 10.30 Hrs.**

The detailed NIT can be viewed and downloaded from web site of M/s Utkarsha Aluminium Dhatu Nigam Limited live tender (www.https://uadnl.com), MIDHANI and NALCO. This Tender is on **CONVENTIONAL MODE** and hence the bidders shall submit the bids in **HARD COPY** only to M/s Utkarsha Aluminium Dhatu Nigam Limited, P.O-Kanchanbagh, Hyderabad.

Any amendment, time extension, clarifications, etc. will be uploaded on the above mentioned Website only. Bidders should regularly visit the above websites to keep themselves updated.

1.0 Introduction

M/s Utkarsha Aluminium Dhatu Nigam Limited (UADNL), is a Joint Venture company of M/s National Aluminium Company Limited (NALCO), a Navratna CPSE under Ministry of Mines and M/s Mishra Dhatu Nigam Limited (MIDHANI), a Miniratna CPSE under the Ministry of Defence. This JV

© 2022 MECON LIMITED. All rights reserved

Company is incorporated on 21.08.2019 with an equal equity partnership of NALCO and MIDHANI for Setting up green field project of High End Aluminium Alloy Flat Rolled Products Production Plant.

MECON Limited (MECON), Ranchi hereinafter referred to as “Consultant", on behalf of UADNL, Hyderabad hereinafter referred to as "Purchaser”.

UADNL intends to install Special Aluminium Alloy Melting and Slab & billet Casting Facilities at Nellore District in Andhra Pradesh, India.

Bidder shall download the Bid Document in his own name and submit the Bid directly. The Bid Document is non- transferable. Bidders shall submit the bid directly and in their own name without involving any intermediaries.

The Offers of only those Bidders who qualify the Eligibility Criteria stipulated below and also meet / comply with the requirements specified under various sections of this Bidding Document, will be considered for further evaluation.

2.0 Description of Work

The scope of work shall cover design, engineering, manufacturing, assembly, shop inspection, testing, painting, packing, delivery, unloading & storage at site, transportation to erection location, erection, commissioning and demonstration of performance guarantee of High end Aluminium Alloy Melting and slab & billet Casting Facilities as detailed in the Technical Specification complete in all respects along with their accessories and commissioning spares which mainly comprises with Aluminium Ingot & Scrap Melting Furnaces, Liquid High end Aluminium Alloy Holding Furnaces, Vertical Direct Chill Casting Units, Homogenizing Furnace Units, Scalping Machine, Band Sawing Machine and Ultrasound inspection System with all accessories including instrumentations, electrics & automation, utilities & services within the battery limit on lumpsum turnkey basis.

The detailed Scope of Work is mentioned in various sections of the Bidding Document

3.0 Time Schedule For Completion

The Facilities will be commissioned including PG test (PAC) within (Twenty Four) 24 months from the effective date of the Contract.

4.0 Eligibility Criteria :

Bidder fulfilling eligibility criteria, mentioned below, can only participate in this tender. Bidders can participate either solely or through a consortium. In case of consortium, a consortium agreement is to be submitted along with the techno-commercial bid indicating the scope matrix of the members and proportional cost of their share of work for the proposed project. The lead partner and consortium partner together shall fulfil the experience requirement mentioned in sl. no. 4.1 of the eligibility criteria in case of consortium bidding. Turn over criteria to be fulfilled by the consortium members’ together. Number of Consortium members is limited to maximum **three members.**

© 2022 MECON LIMITED. All rights reserved

However, any firm/agency having no prior experience for their proposed share of work (as per sl. No 4.1) shall not be considered as a Consortium member.

4.1 Technical Eligibility criteria

(i) The Bidder should have provided Process Technology/know-how for Melting and Vertical Direct Chill (DC) casting facility of Aluminium Alloys of 2xxx/7xxxx Series, in last 10 years from the date of issue of tender.

(ii) The Bidder should have designed, supplied and commissioned project in last 10 years from the date of issue of tender for Melting and Vertical Direct Chill (DC) casting facility of high end aluminium alloys (Alloys of 2xxx/5xxx/6xxx/7xxx series). The capacity of the previously supplied melting furnace shall be equal to or more than 45 tons/heat and the Capacity of DC casting machine shall be equal to or more than 40000 tonnes/Annum/machine.

Note : The bidder shall submit following supporting documents for the above mentioned eligibility criteria:

(a) Work order/ Contract Agreement / Purchase Order and completion certificate(s) / final certified bills towards job completion issued by Owner(s) and / or end user(s) on their official letter head /format along with supporting documents evidencing fulfilment of the experience criteria.

4.2. <u>Financial criteria</u>

Sl. No	Criteria	Documents for confirmation
1.	**Sole bidder/Consortium Partners** a) Should have been established and operating since last 10 years from the date of issue of the Tender. b) Should not be a trading company	a) Certificate of Incorporation issued by the Registrars of Companies with proof of address and year of establishment. In case of foreign companies, relevant registration certificate from the countries where the company is registered. b) Self certificated document to be submitted
2.	**<u>Annual Turnover</u>** Should have an average annual turnover of equal to or more than INR 150 crores or equivalent amount in foreign currency in	Audited Balance sheet and profit & Loss account for last three financial Years of Bidders(Sole)/lead partner & consortium partners.

© 2022 MECON LIMITED. All rights reserved

	previous three financial years (FY2018-19, 2019-20, 2020-21) or FY2019,2020, 2021 for companies having 31st of December as financial year end In case of consortium, each member shall have minimum Turnover proportional to the cost of their share of work for the proposed project and all together shall meet the required criteria.	RBI reference exchange rate prevailing on the date of opening of Part – I bid (Techno-Commercial) shall be considered for arriving equivalent amount in foreign currency.
3	**<u>Net worth / Solvency Certificate</u>**: a) Bidder (Sole / All members of consortium) should have positive net worth for each of the last 3 financial years.(FY2018-19, 2019-20, 2020-21) or FY2019,2020, 2021 for companies having 31st December as financial year end. OR b) Submission of solvency certificate for INR 100 Crores or equivalent amount by sole bidder/consortium partners together issued not earlier than 6 months from the date of Tender. In case of consortium, each member shall have minimum solvency proportional to the cost of their share of work for the proposed project and all together shall meet the required criteria	a) Audited Balance sheet for last three financial Years of Bidders(Sole)/lead partner and consortium partners. OR b) In case of Indian parties it should be issued by nationalized or scheduled bank from INDIA. In case of foreign parties it should be issued by Nationalized or schedule bank from India or bank of repute from their own country having branches in India.

Notes to Eligibility Criteria:

1. All documents are to be submitted in English language Only.

2. The translated copy of audited balance sheet and P & L accounts are to be certified by notary/Auditor.

3. In case of sole bidder being Indian subsidiary of a Parent Foreign Company may be considered, provided that the bidder / the Foreign Parent Company meets the technical experience qualification Criteria as stipulated in the tender. In the event of works get awarded

© 2022 MECON LIMITED. All rights reserved

to Indian Subsidiary of Parent company, then works have to be executed under the supervision and back–up of the Foreign Parent Company and for which Parent Company has to furnish a Corporate Undertaking to be jointly and severally responsible with the Indian Subsidiary for due, proper and timely performance of the contract and discharge of liabilities of its Indian Subsidiary.

4. Failure to meet the eligibility criteria will render the bid to be summarily rejected. Therefore, the bidder shall, in his own interest furnish complete documentary evidence by way of copies of work orders, work completion certificates, etc., in the first instance itself, in support of their fulfilling the eligibility criteria. If required, UADNL may seek clarifications only on submitted documents.

5. **In-house work experience shall not be considered as valid experience for the purpose of qualification**

5.0 Documents to be submitted along with the Bid:

5.1 Bidder (sole)/All Consortium Partners should have PAN/ TAN/TIN/GST registration no.

a) Copy of registration certificates for Indian parties.

b) In case of foreign parties, relevant tax registration certificate from the countries where the company is Registered.

c) For foreign Bidders only PAN shall be submitted.

5.2 This is a no deviation tender. Bidder shall quote against the bidding document without any deviation. Offers submitted by the bidders with deviations **shall be summarily rejected.**

Unconditional acceptance of all technical & commercial Terms & conditions as outlined in the tender. Self-certified documents are to be submitted by Bidder/all consortium partners in this context.

5.3 In case any documents including documents for financial eligibility are not in English Language, then the English translation copy of the same shall be furnished duly certified, stamped and signed by Local Chamber of Commerce in Bidder's country, along with the original Eligibility documents.

5.4 Integrity Pact: Bidder(Sole/ consortium partners) shall submit the signed Integrity Pact enclosed herewith along with Techno-Commercial Bid without any changes / deviation. If the signed Integrity Pact is not found enclosed, such offers would be liable for rejection.

5.5 EMD : Bidder shall submit an EMD amount of **Rs.50,00,000/- (Rupees Fifty Lakhs only) or equivalent Foreign Currency as mentioned in this tender** through online, DD or Bank Guarantee confirmed through a Nationalized Bank/ Scheduled Commercial Bank encashable at Hyderabad along with Techno-Commercial Bid. **If EMD is not found enclosed, such offers are liable for rejection**. Bank Guarantee shall be valid for a period of eight (8) months. EMD is exempted for MSMEs as per Government Guidelines.

© 2022 MECON LIMITED. All rights reserved

The fee towards cost of EMD can be submitted by any of the member of the Consortium subject to proper authorization from the leader of Consortium.

All the bidders are requested to submit the "EMD and Security Deposit" online preferably or through Bank Guarantee (in the prescribed proforma given at part VII) from a Nationalized Bank or Scheduled commercial Bank encashable in Hyderabad, INDIA.

Bank Details for Online submission of EMD:

Name of the account holder	: Utkarsha Aluminium Dhatu Nigam Limited
Name of the Bank	: State Bank of India
Branch	: Chandrayangutta Branch, Hyderabad, Telangana 500058, India
Account number	: 00000038754989786
Type of Account	: Current Account
IFSC Code	: SBIN0003026
MICR Code	: 500002012
Swift Code	: SBININBB306

5.6 **All Bank Guarantees (EMD/SD/Advances/PBG) submitted:**

a. Shall be from a Nationalized Bank/ Scheduled Commercial Bank encashable in India and in our prescribed formats only.

b. Bank Guarantees (SD/Advances/PBG) shall have an additional claim period of three months from the date of expiry.

5.8 Consortium bidding: In case bid is submitted as consortium, a consortium agreement as per prescribed format (Annexure-6) is to be submitted along with the techno-commercial bid.

Consortium bids will be considered as per the following terms:

a. Number of members in the consortium is restricted to three (one Leader and two members)

b. The overall project management shall be performed by the Leader. The members of Consortium shall assume responsibility jointly and severally and shall submit Agreement/ Memorandum of Understanding (MOU) duly notarized so as to be legally valid and binding on the members along with the bid clearly defining the scope and responsibility of each consortium member including the leader. The MOU shall be converted to a definitive Agreement between consortium members after award of job and before signing of Contract agreement between UADNL and the each member of the consortium member which shall be done within three months from the date of award. The Agreement must remain in force at least till the pendency of the Contract.

c. Member(s) of the Consortium shall give Power of Attorney (POA) to the Leader of the Consortium.

© 2022 MECON LIMITED. All rights reserved

d. The Leader of the Consortium shall be authorized to incur liabilities and receive instructions for and on behalf of any and all member(s) of the Consortium during the entire execution of the contract and may receive payment on behalf of the consortium.

e. Members of the Consortium shall be liable jointly and severally for the performance of the contract in accordance with the contract terms and discharge of the contractor's obligations & liabilities under the contract.

f. The Consortium Leader and the scope of the work (i.e. scope responsibility matrix of each consortium member in line with the experience criteria submitted) shall be clearly defined and enclosed in the bid and shall not be changed thereafter.

g. Separate bid by any of the Consortium member shall not be accepted. A bidder can be a member only in one consortium. In case any bidder participates in more than one consortium for this tender, all the consortium bids with that bidder participation, shall be rejected.

h. In case of consortium, the Technology Supplier or the partner having the maximum share of work in value terms shall be the Leader.

i. On the offer of the bidder being accepted by the UADNL, the Security Deposit Bank Guarantee as per stipulations has to be submitted by the Leader of the Consortium.

j. The fee towards cost of EMD can be submitted by any of the member of the Consortium subject to proper authorization from the leader of Consortium.

k. Payments to be made to respective members/partners directly for their respective scope of work (ex: In case of INR payments to Indian Partners in the Consortium etc.), which shall be indicated in the techno-commercial offer and recommended by the Lead Partner.

6.0 SALIENTFEATURES OF TENDER

i)	NAME OF THE WORK	HIGH END ALUMINIUM ALLOY MELTING AND CASTING PLANT (PACKAGE NO.01)
ii)	LOCATION OF THE WORK	NELLORE,ANDHRA PRADESH,INDIA
iii)	TENDER REFERENCE	**UADNL/ADVT/GTE/PKG-01/0622/01, Dt: 04.06.2022**
iv)	COMPLETION PERIOD	THE FACILITIES WILL BE COMMISSIONED INCLUDING PG TEST (PAC) WITHIN (TWENTY FOUR) 24 MONTHS FROM THE EFFECTIVE DATE OF THE CONTRACT.
v)	MODE OF TENDERING	OPEN , CONVENTIONAL , TWO PART TENDERING

© 2022 MECON LIMITED. All rights reserved

vi)	VALIDITY OF OFFER	06 MONTHS FROM BID OPENING DATE
vii)	DATE OF SITE VISIT	BIDDERS TO INFORM THE DATE FOR THEIR PROPOSED SITE VISIT
viii)	DATE AND VENUE OF PRE BID MEETING	FROM 11:00 AM IST OF 20.06.2022 AT UADNL, HYDERABAD.
ix)	TENDER SUBMISSION DUE DATE & TIME	ON OR BEFORE OF 11.07.2022 UPTO 17.30 HOURS IST.
x)	UN-PRICED TENDER OPENING DATE / TIME	AT 10:30 HRS IST OF 12.07.2022
xi)	PRICED BID OPENING DATE / TIME	WILL BE INTIMATED LATER

7.0 OTHER POINTS:

7.1 Owner / Consultant will examine the Bids for completeness and authenticity including whether the documents have been signed, complete and the details furnished are in order.

7.2 Bidder shall be deemed to have examined, fully understood and considered the contents of all documents issued as part of this NIT prior to preparation of the proposal. It shall be the sole responsibility of the Bidder to notify the Client of any discrepancies errors or omissions in any part of the NIT and to obtain interpretation and/or clarification on any questions that may arise.

7.3 Bidders requiring a clarification of the documents must notify the Client, in writing, not later than fifteen (15) days before the proposal submission date. The Client shall respond to such requests and copies of the response shall be sent to all invited Bidders.

7.4 Submission of authentic documents is the responsibility of the Bidder. However, UADNL / MECON reserves the right of getting the document cross verified, at their discretion, from the document issuing authority.

7.5 UADNL / MECON shall not be responsible for any expenses incurred by bidders in connection with the preparation & delivery of their bids, site visit and all other expenses incurred during bidding process regardless of the conduct or outcome of the bidding process.

7.6 UADNL / MECON reserve the right to accept or reject any or all the bids received and/ or annul the Bidding process at any time without assigning any reason whatsoever, without incurring any obligation or liability whatsoever, and without any obligation to inform the Bidder(s) of the grounds for such action.

7.7 Canvassing in any other form by the Bidder or by any other agency on their behalf may lead to disqualification of their Bid.

© 2022 MECON LIMITED. All rights reserved

7.8 In case any bidder is found to be involved in cartel formation, his bid will not be considered for evaluation / placement of Order. Such bidder will be debarred from bidding in future.

7.9 Bids received after the due date and time shall be rejected and representative of such bidders shall not be allowed to attend the bid opening.

7.10 Bidders should comply with all Notifications (including amendment, if any,) issued by the Government of India, Reserve Bank of India , Statutory Authorities in India etc.

7.11 Tender documents including Terms & Conditions and detailed specification of work shall be downloaded from website of M/s UADNL, NALCO & MIDHANI.

Amendments and/or clarifications, if any, issued for the NIT shall form part and parcel of the Tender Documents. Amendments/Clarifications will be hosted in the web sites as mentioned above. Bidders are requested to visit these web sites from time to time to note the amendments/clarifications before submission of their bid. UADNL/MECON shall not be responsible if any bidder omits to notice any amendments/clarifications before submission of their bid.

7.12 Bids (Part-I: Techno- Commercial Bid-Un-priced and Part-II: Price Bid) will be received in Sealed Cover up to last date and time as specified in the tender document or extended bid due date., as the case may be through Speed post/Courier / hand over personally at address given below in the manner specified at Annexure - 1.

7.13 If it happens to be holiday on the date of opening of bids, then the bid shall be opened on next working day at the same time.

7.14 UADNL shall not be responsible for any expenses incurred by bidders in connection with the submission of their bids, site visit and other expenses incurred during bidding process.

7.15 Bid shall remain valid for acceptance for a period of 06 (six) months from the due date/ extended due date of opening of the bid.

7.16 The date of opening of bid (Part-II : Price Bid) shall be informed to all the qualified bidders whose offers qualify as per bid evaluation criteria and are techno-commercially acceptable.

7.17 A bidder may seek clarification regarding the bidding document provisions, bidding process and / or rejection of his bid. UADNL shall respond to such queries within a reasonable time.

7.19 Multiple Offers from bidders under same group of companies are liable for rejection.

7.20 Please note that neither Price should be given in Blanked Price Format nor price bid should be put in this techno-commercial part. In case this condition is not complied, the bid may be liable for rejection.

© 2022 MECON LIMITED. All rights reserved

7.19 Multiple Offers from bidders under same group of companies are liable for rejection.

7.20 Please note that neither Price should be given in Blanked Price Format nor price bid should be put in this techno-commercial part. In case this condition is not complied, the bid may be liable for rejection.

Contact Person : Shri Jayanta Sarkar, GM I/c (NFD),
MECON Limited,
Ranchi-834002, India.
Tel No. 0651-2483362,
email – jsarkar@meconlimited.co.in

Contact Person : Shri Ramanaiah Thudum, Deputy General Manager
Nodal Officer
Utkarsha Aluminium Dhatu Nigam Limited,
P.O.Kanchanbagh
Hyderabad-500058, India.
Tel No. +91 40 2418 4466; Mobile No.:+91-9741964231,
email – nodalofficer@uadnl.com

For UTKARSHA ALUMINIUM DHATU NIGAM LIMITED

(4/6/22)

( )

Date: 04/06/2022

© 2022 MECON LIMITED. All rights reserved

SECTION- II

GENERAL INSTRUCTIONS TO TENDERER

© 2022 MECON LIMITED. All rights reserved

TABLE OF CONTENTS

1.0 LIST OF TENDER DOCUMENTS 4-5
2.0 TENDERER TO INFORM HIMSELF FULLY 5
3.0 SCOPE OF WORK 5-9
4.0 SPECIAL CONDITIONS 9-10
5.0 INFORMATION TO BE SUBMITTED WITH TENDER 10-11
6.0 TRAINING OF PERSONNEL 11
7.0 TIME SCHEDULE FOR DELIVERY 11-12
8.0 TRANSPORTATION 13
9.0 INSURANCE 13
10.0 LICENSES AND TAXES 13-16
11.0 GUARANTEE AND PERFORMANCE 16
12.0 PRICES 16-17
13.0 PRICE VARIATION 17
14.0 FOREIGN CURRENCY TO BE STIPULATED 17
15.0 TERMS OF PAYMENT 17
16.0 LETTER OF CREDIT 17-19
17.0 CAPACITY OF THE TENDERER 19
18.0 SUBMISSION OF TENDER 20
19.0 PERIOD OF VALIDITY OF TENDER 20
20.0 LANGUAGE 21
21.0 ARRANGEMENT OF TENDER 21
22.0 EARNEST MONEY 21-22
23.0 NO CLAIM FOR COMPENSATION FOR SUBMISSION OF TENDER 22
24.0 INSURANCE POLICY FOR WORKMEN 22
25.0 LOWEST TENDER MAY NOT NECESSARILY BE ACCEPTED 22
26.0 CONTRACT AGREEMENT 22
27.0 NOTICES ON BEHALF OF PURCHASER 22

© 2022 MECON LIMITED. All rights reserved

28.0 ADDENDA TO TENDER DOCUMENTS 23
29.0 QUERIES/CLARIFICATIONS 23
30.0 INTEGRITY PACT 23
31.0 ADDITIONAL INSTRUCTIONS TO THE TENDERERS 23-26
32.0 OVERRIDING EFFECT 26-27
33.0 CONSORTIUM 27

© 2022 MECON LIMITED. All rights reserved

1.0 LIST OF TENDER DOCUMENTS

We have pleasure in enclosing the following documents for the above work and would invite you to submit your best offer. The following documents shall constitute the tender.

Volume-I: Commercial Document

Section – I : Notice Inviting Tender

Section – II : Instruction to Tenderers

Section – III : Contract Agreement
Appendix-1 : Price Schedule
Appendix-2 : Time Schedule
Appendix-3 : Terms of Payment

Section- IV : Price bid format & Evaluation Criteria

Section – V : Special Conditions of Contract

Section – VI : General Conditions of Contract for supply of Plant, Machinery and Equipment, supervisory service for Erection & commissioning and complete Erection and commissioning, and performance guarantee.

Section – VII : Formats & Annexures
Annexure- 1 - Procedure to be followed for submission of bid
Annexure 2 - Integrity Pact
Annexure 3 - Specimen Forms of bank guarantee

1. Bank Guarantee For Earnest Money Deposit
2. Form of Bank Guarantee in lieu of Security Deposit
3. Bank Guarantee to secure the initial advance payment
4. Bank Guarantee for GA Drawings
5. Bank Guarantee For Lotwise supplies
6. Performance Bank Guarantee

Annexure 4 - Consortium Agreement
Annexure 5 - Draft Letter of Credit Format
Annexure 6 - Safety Contractor Manual
Annexure 7 – (Land Sharing as DPPIT)

© 2022 MECON LIMITED. All rights reserved

Volume-II: Technical Specifications (TS)
Volume-III: General Technical Specifications (GTS)

2.0 TENDERER TO INFORM HIMSELF FULLY

2.1 The tenderer shall study carefully the enclosed tender documents and the documents referred to therein before submitting his offer. The tenderer shall fully satisfy himself of the suitability of the plant, machinery and equipment and layout as indicated in the tender documents, conditions of working at and around the construction Site and take full responsibility for the safe and efficient operation and guarantee of the quality and specified output of the plant, machinery and equipment offered. The offer should be for plant, machinery and equipment and for the services according to the Technical Specifications and in accordance with the terms and conditions of the General Conditions of Contract.

2.2 The tenderer shall inspect the Site and shall satisfy himself of the Site conditions and shall collect any other information which he may require before submitting the tender. Claims and objections due to ignorance of Site condition shall not be considered after submission of the tender.

3.0 SCOPE OF WORK

3.1 The Work is outlined in the tender documents listed in Clause 1.0 above which are enclosed with this tender and all of which shall be used together to define the Work. The Work shall be in conformity with this tender and all other documents, such as specifications, drawings, standards, commercial and legal terms and conditions, which make up the tender documents and those referred to therein.

3.2 The tenderer shall include in his tender, for the provision of process technology & know-how, equipment and services required for the effective implementation of the Project specified in the tender documents, including complete mechanical, electrical with automation system, refractories, measuring and control instruments, technological steel work & platforms, all necessary piping, valves and fittings, all cables & cable trays with required supports and all foundation bolts, anchoring parts, embedded steel, etc. In addition the tenderer shall offer separately for the supply of any additional equipment and material which are not specially mentioned in the tender, but are required to complete the plant, machinery and equipment offered in every respect and for safe and efficient operation and guaranteed performance. It shall be the responsibility of the successful tenderer to furnish the materials, plant, machinery and equipment and provide the services specified accordingly, unless specifically stated as being furnished by others.

© 2022 MECON LIMITED. All rights reserved

3.3 The materials, plant, machinery and equipment and services to be provided by the successful tenderer shall include, but not be limited to, the following:

3.3.1 Submission of all drawings, documents and data to be furnished as per the Contract, along with complete list of drawings and a time schedule for submitting these in accordance with Clause 17 of the General Conditions of Contract.

3.3.2 Submission of general arrangement drawings showing to scale the size and location of major equipment and components, including electrics, control cabinets etc. giving over- all dimensions, clearances, controlling dimensions as well as necessary elevation, sections, and plans.

3.3.3 Submission of foundation outline drawings, anchor Bolt location plans, loading diagrams and foundation Bolt details for all foundations and concrete structures, duly certified by the Contractor.

3.3.4 Submission of mechanical, electrical, piping, instrumentation, refractory, assembly, installation drawings, instruction and all other drawings and documents as specified.

3.3.5 Procurement of materials, manufacture/fabrication and supply of plant, machinery and equipment for all items as specified.

3.3.6 Supply of all foundation bolts for equipment under the scope of this package, large size foundation Bolts, Bolts of special design and those made of alloy / special steels, special embedment and embedded inserts/steel for equipment that may be required for the plant, machinery and equipment.

3.3.7 Submission of itemized list of spare parts for two (2) years normal working of the plant, machinery and equipment operating instructions and maintenance manuals. Spare parts not manufactured directly by the tenderer shall be identified and description/catalogues given in sufficient detail to enable the Purchaser to procure these directly from the manufacturers, if required.

3.3.8 Carrying out inspection and tests during and after manufacture (including making arrangements for inspection by the Purchaser or its authorized representative) and on completion, packing, marking and dispatching the equipment FOB and supply and delivery of indigenous items FOR Site of the Purchaser including unloading thereof.

© 2022 MECON LIMITED. All rights reserved

3.3.9 Supply of sufficient quantity of commissioning spares necessary for the commissioning of the plant, machinery and equipment offered up to the date of its provisional acceptance by the Purchaser. The commissioning spares shall be included with the plant, machinery and equipment and must be at Site with the plant, machinery and equipment. Supply of spare parts for two years normal working of the plant for use after PAC.

3.3.10 Supply of one set of special tools for repair and maintenance of plant, machinery and equipment. A list of these tools proposed to be supplied shall be given in the offer.

3.4 For the plant, machinery and equipment offered, electric power and utility piping connections shall be suitably terminated at switches or valves, as the case may be, switch boxes and termination valves (with companion flanges, where relevant), shall be located at easily accessible positions. The tenderer shall minimize the number of connections to be provided by the Purchaser for electric power and utilities. The particulars of power and utilities that will be made available by the Purchaser are indicated in the specification and the tenderer shall include any equipment required to transform these to suit the requirements of the equipment offered. The offer shall include all piping with valves and fittings and wiring, for interconnecting parts / components of the different units/systems of the tendered plant, machinery and equipment.

3.5 Where refractory and special lining work is involved, e.g. furnace etc. in addition to one set of refractory lining materials, the offer shall include ten percent (10%) extra quantity for all refractory/materials from Indian sources and twenty percent (20%) extra quantity for all imported refractories/materials. For such refractory/lining work the tenderer shall furnish itemized lists of such refractory/lining materials for two (2) years normal working of the plant, machinery and equipment. The tenderer shall also properly identify these with the specifications, sizes and shapes in sufficient detail to enable the Purchaser to procure these directly from the manufacturers, if required.

3.6 Supervision of Erection of Plant and equipment and Putting into commissioning

3.6.1 The successful tenderer to provide services for supervision of unloading of the consignment at project site, supervision of erection, start-up and putting into commission, including performance tests of all plant, machinery and equipment supplied by the successful tenderer, as well as those that may be procured from/fabricated by others based on the successful tenderer's drawings, specifications and bills of quantities. The scope of work , inter

© 2022 MECON LIMITED. All rights reserved

alia, include final painting/finishing, however, where such services are required, the same is indicated in the enclosed specifications.

3.6.2 The successful tenderer shall provide resident supervisory personnel for the above services in accordance with the relevant part of the General Conditions of Contract. The tenderer shall indicate in his offer the number and category of supervisory personnel and other erection / operation specialists he proposes to depute for the Work as well as the estimated duration of their stay at Site.

3.6.3 The tenderer shall in his tender also furnish the complete list of specialized installation tools, tackles, instruments and appliances that, in his opinion, will be required in connection with the installation of the Plant, Machinery and Equipment. All customs related formalities including costs, regarding declaration of instruments, tools, tackles and other appliances for re-export upon successful completion of the Work shall be the responsibility of the successful tenderer.

3.6.4 The successful tenderer shall satisfy himself before giving clearance for the foundation for erection purpose that the civil engineering work has been carried-out in accordance with the drawings and specifications furnished by the Purchaser or Purchaser's consulting Engineer, based on data furnished by the successful tenderer.

3.7 Complete erection of Plant, Machinery and Equipment and putting into Commission, including but not limited to the following:

3.7.1 The successful tenderer shall provide services for complete Installation, start-up and putting into Commission, including performance tests of all Plant, Machinery and Equipment supplied by the successful tenderer, as well as those that may be procured from/fabricated by others based on the successful tenderer's drawings, specifications and bills of quantities. The successful tenderer shall provide the above services in accordance with the terms and conditions of the Contract.

3.7.2 In such cases, the tenderer shall provide the above services in accordance with the relevant part of the General Conditions of Contract, and shall indicate in his offer the number and category of supervisory personnel and other erection operations specialists he proposes to depute for the work as well as the estimated duration of their stay at site.

3.7.3 The successful tenderer shall inspect and satisfy himself before commencement of installation that the civil engineering work has been carried out in accordance with

© 2022 MECON LIMITED. All rights reserved

the drawings and specifications approved by the Purchaser or Purchaser's consulting Engineer, based on data furnished by the successful tenderer.

3.7.4 The successful tenderer shall facilitate the Purchaser's personnel to get fully conversant with the process technology & know-how, working of the plant, machinery and equipment during installation, commissioning and testing.

3.7.5 The successful tenderer shall be responsible for providing the necessary installation tools, tackles, instruments and appliances required for the installation work. He shall also be required to provide, without any extra cost, additional tools, tackles, equipment etc., if considered necessary by the Purchaser for efficient working and the completion of installation in time. All charges in connection with these, such as transportation from the successful tenderer's work to Site and back on the completion of the installation, operation etc., shall be to the account of the successful tenderer.

3.7.6 The successful tenderer shall be responsible for proper storage of entire consignments (after taking over from Purchaser at project site in case of FOB/C&F as well as FOR delivery) containing equipment and materials under this package till installation at their stores and/or stocking place and all subsequent handling and transport.

3.7.7 The successful tenderer shall be responsible for safe storage and custody of their supplied plant & equipment till they are handed over to the Purchaser after PAC. Any damage, breakage and loss during this period will be to the account of the successful tenderer and he should make the necessary arrangements for proper replacement/repair in time.

4.0 SPECIAL CONDITIONS

4.1 Maximum use shall be made of Indian materials and services to the extent possible for which payments will be made in Indian rupees.

4.2 The tenderer shall, however, take complete responsibility for co-ordination of the supplies and adhering to the delivery and other schedules and give performance guarantee for the complete Plant, Machinery and Equipment, including the imported and indigenous portions thereof.

4.3 For procurement from indigenous sources, no foreign exchange or import licenses for importing equipment, components, spares, raw materials or other services will be arranged

© 2022 MECON LIMITED. All rights reserved

for or provided by Purchaser.

4.4 It is the intention of the Purchaser to obtain, to the maximum extent possible equipment and material from indigenous sources. These include various electrical equipment and controls, including drives and controls, as well as other equipment, components and materials such as cables, valves, pipes, refractories, insulation materials, fabricated components etc. available from indigenous sources, especially from the Public Sectors Units.

4.5 The tenderer shall clearly indicate for the major items offered from indigenous sources together with the name of the agency against the respective items.

4.6 The tenderer should preferably have a resident representative in India. The address of such representative in India should be indicated in the tender.

5.0 INFORMATION TO BE SUBMITTED WITH TENDER

In addition to the information called for in the different sections of the tender documents, tenderer shall furnish the following information with the tender without which the tender is liable to be rejected:

5.1 Complete description and working of the plant, machinery and equipment, supported by such drawings and catalogues as are required to enable the Purchaser to study the suitability of the Plant, Machinery and Equipment offered along with brief of the process technology & know-how.

5.2 A list of major components, systems and sub-systems of plant, machinery and equipment tendered, indicating the names of potential suppliers and/or sub-contractors. The tenderer shall clearly indicate the items offered from abroad and from indigenous sources, together with the name of the agency against the respective items.

5.3 General arrangement drawings, showing, major equipment, giving overall dimensions, clearances, controlling load dimensions, weights, etc. as well as necessary elevations, sections and plans for studying the suitability of the offered items. Along with these arrangement drawings, preliminary foundation outline drawings, with load data and bolt locations are to be furnished, wherever applicable.

5.4 Requirements of power, water and other utilities for normal operation of the offered plant, machinery and equipment for the purpose of designing the auxiliary and service systems. Requirement of Emergency power, water, air, etc along with name of consumers of emergency services also to be indicated separately. These shall be

© 2022 MECON LIMITED. All rights reserved

binding on the successful tenderer.

5.5 Grade and quantities of flushing oil, lubricating oils and other consumables required during the start-up, commissioning, initial filling and yearly requirements for normal operations. The equivalent brands and specifications for all consumables shall be furnished.

5.6 Details of consumption, output and performance guarantee of the plant, machinery and equipment.

5.7 Estimated cost of operation of the plant and equipment.

5.8 Itemized weights for major items of the complete plant, machinery and equipment.

5.9 List of tests and the procedures for conducting the tests proposed at the tenderer's factory before
dispatch and at Site during commissioning.

5.10 Recommended operation and maintenance personnel, semiskilled and skilled, for the efficient operation and maintenance of the plant, machinery and equipment offered.

5.11 Questionnaire, if any, included in the tender documents duly filled in. Tenders with incompletely filled in questionnaire are liable to be rejected.

6.0 TRAINING OF PERSONNEL

6.1 The successful tenderer shall arrange for the training of a reasonable number of the Purchaser's technical personnel in shops manufacturing the equipment and in plants where equipment similar to those covered in the tender documents are in operation. The number of such personnel and the period of training will be mutually agreed upon. The travelling and living expenses of the trainees will be borne by the Purchaser.

7.0 TIME SCHEDULE FOR DELIVERY

7.1 The delivery schedule planned by the Purchaser for plant, machinery and equipment and the performance of its services is indicated in the tender.

7.2 In the case of imported plant, machinery and equipment, the delivery shall mean (i) FOB Port of Shipment/Shipment Date for FOB Offers and (ii) Arrival at Port of Destination for C&F Offers . In the case of locally procured/indigenous items, the delivery shall mean FOR site including unloading at Site.

7.3 The tenderers shall submit with his offer a time schedule, showing the individual time

© 2022 MECON LIMITED. All rights reserved

periods required for submission of drawings, procurement, manufacture, fabrication, delivery, etc. The schedule shall also show the estimated Installation time, based on normal Site work, six (6) days a week and eight (8) hours a day, as well as the time for start-up, putting into commission, performance guarantee tests and provisional acceptance. In addition, the successful tenderer shall submit the schedules accompanied by a network diagram, incorporating all important activities and their estimated duration from the award of the Contract to its completion indicating clearly the critical path.

7.4 The successful tenderer shall be responsible for coordinated delivery of all plant, machinery and equipment, both from abroad and India, and shall ensure deliveries in the sequence in which they will be required at Site for installation. He shall affect delivery of plant, machinery equipment, materials etc. generally as under:

7.4.1 Plant, Machinery and Equipment, refractory and lining materials shall be delivered according to the billing cum shipping schedule and in general the sequence in which they will be required at Site for installation and erection.

7.4.2 Large size foundation Bolts, Bolts of special design, special embedment, etc. as per Clause 3.3.6 hereof shall be delivered well in advance of the equipment so as to be available at Site during the construction of the related foundations.

7.4.3 Commissioning spares as per Clause 3.3.9 hereof shall be delivered along with the plant, machinery and equipment.

7.4.4 Save and except elsewhere provided in the Contract, Spare parts for two (2) years normal work of the plant, machinery and equipment hereof shall be delivered prior to the provisional acceptance of the plant, machinery and equipment.

7.4.5 Special tools for repair and maintenance as per Clause 3.3.10 hereof shall be delivered prior to the provisional acceptance of the plant, machinery and equipment.

7.4.6 Specialized installation tools, tackles, instrument and appliances as per Clause 3.7.5 hereof shall be delivered before installation of the plant, machinery and equipment and the same shall remain the property of the successful tenderer.

7.4.7 Save and except elsewhere provided in the Contract, consumables as per Clause 5.5 hereof shall be delivered prior to commencement of installation of the plant and equipment.

7.4.8 Drawings and documents shall be delivered in the sequence outlined in Clause 17.14.3 for the due and effective performance of Contract.

© 2022 MECON LIMITED. All rights reserved

8.0 TRANSPORTATION

8.1 The successful tenderer shall deliver all imported plant, machinery and equipment on FOB Port of shipment or in case of C&F at port of arrival.

For indigenous items, the successful tenderer shall deliver the plant, machinery and equipment FOR site including unloading at Site.

For imported items under FOB port, the Purchaser will make arrangements to ship the cargo, pay the marine insurance, clear the consignment at Indian port, pay the custom's duty and arrange for obtaining the customs clearances and dispatch to and unloading at plant site. In case of C&F term, the successful tenderer will take care of cost for shipping.

Within the framework of the installation services referred to in Clause 3.6 and 3.7 above, the successful tenderer shall be responsible, if required by the Purchaser to give his expert advice and guidance in regard to the safe handling of cargo during unloading at India port and for dispatching to site.

9.0 INSURANCE

9.1 The successful tenderer shall provide all insurance up to the FOB port of shipment stage for imported items and up to the FOR site stage for indigenous items and unloading thereof, as per Clause 25 of the General Conditions of Contract. In case of C&F terms the successful tenderer will pay for cost of shipping and insurance will be paid by Purchaser.

10.0 LICENSES AND TAXES

10.1 Licenses

10.1.1 All export or other licenses or permits which may be required by law and/or regulations of the country in which any of the plant, machinery and equipment covered by this tender is produced or sold will be obtained by the successful tenderer at his expense. ***If any such license is required, a copy of the license is to be submitted to the Purchaser within three months from the date of signing of Contract and before the release of first payment for such plant, machinery and equipment or a self-declaration by the successful tenderer that such license is not required.***

10.1.2 The Purchaser will, at his expense, obtain necessary licenses and permits if or as may be required under law or regulations to import the plant, machinery and

© 2022 MECON LIMITED. All rights reserved

equipment into India. The successful tenderer and the Purchaser will furnish each of such information and assistance as may be necessary to procure the issuance of such licenses or permits.

10.2 Taxes

10.2.1 All statutory taxes, duties, fees, cess & levies payable outside India on the goods sold/services provided to the Purchaser shall be borne and paid by the successful tenderer.

All statutory customs/import duties, taxes, fees, cess & levies, etc. in India on the imported goods on amount payable in foreign currencies shall be borne and paid by the Purchaser.

Any tax applicable in India on foreign training provided by the tenderer outside India will be borne and paid by the Purchaser and shall not be included in the Contract Price to be quoted by the tenderer.

The Contract Price to be quoted by the tenderer for providing Installation services in India will be exclusive of taxes or any other duties, cess applicable for such services.

The successful tenderer shall be liable to pay the applicable income taxes under Indian Income Tax Act 1961 or under Double Taxation Avoidance Agreement as the case may be for income earned or in respect of income deemed to accrue or arise in India. The applicable withholding tax/other taxes for providing Installation services in India by the tenderer will be deducted by the Purchaser. A certificate for tax deduction at source shall be issued by the Purchaser to the successful tenderer to get the necessary tax credit for filing the tax return in their home country.

The successful tenderer shall be liable to pay and shall pay the relevant income tax if and as applicable to the personnel/experts deputed by them for providing Installation services in India under this Contract. The tenderer shall be responsible and comply with all the relevant laws including labour, employment, etc. of such personnel/experts.

10.2.2 Income tax in India, if leviable and other taxes in relation thereto on any other account shall be borne and paid by the successful tenderer. The successful tenderer shall be responsible to furnish the Permanent Account Number, Tax Residency Certificate, tax declarations along with the Tender and shall be liable to file tax returns with respective income tax authorities as required under the Indian Income Tax Act.

© 2022 MECON LIMITED. All rights reserved

All payments under the Contract to the successful tenderer shall be subjected to deduction of taxes at source at the applicable rates in force as per the provisions of the Indian Income Tax Act or Double Taxation Avoidance Treaty whichever is more beneficial to the tenderer. Where the benefits of double taxation are to be availed, it shall be the responsibility of the tenderer to furnish the Tax Residency Certificate to the Purchaser required under the Indian Income Tax Act. Tax deduction at source towards payment for on-site services will be made by the Purchaser as per applicable rate and the certificate thereof shall be provided to the tenderer by the Purchaser.

10.2.3 In the case of indigenous equipment, GST and other taxes and duties shall be borne by and to the account of the successful tenderer and shall be included in the prices quoted by them. The Contract Price shall be inclusive of all taxes, duties, levies, cess and other statutory impositions existing as on the date seven (7) days before due date of submission of the bid. The tenderers shall separately indicate and quantify (against each head) the basic price, incidence of tax, duty, cess and other statutory imposition etc. that they have included in the price quoted by them.

10.2.4 The Purchaser shall use his best efforts to get tax exemptions/concessions applicable in India, if any, to enable the tenderer to benefit from such tax savings to the maximum allowable extent. The successful tenderer shall pass on such benefits to the Purchaser in this regard. Tax deduction at source under GST Act shall be made by the Purchaser on the Contract Price and as per exclusions provided under the Act.

10.2.5 Base date of the Contract shall be the date seven (7) days before last date of submission of bid.

10.2.6 VOID

10.2.7 Any Statutory variation occurring after the Base Date of Contract in the taxes, duties, levies, cess etc. and / or imposition of new taxes, duties, levies, cess, etc. in relation to goods and services in India in the course of the performance of the Contract will be to Purchaser's account and payable at actual against documentary evidence. If the rate of taxes, duties, levies, cess etc. applicable in India is increased or decreased on the price indicated in foreign currency, or new tax is introduced in the course of the performance of Contract, the same shall be to Purchaser's account at actual.

10.2.8 Goods & Service Tax for the indigenous services shall be paid to the successful

© 2022 MECON LIMITED. All rights reserved

tenderer against each invoice. The invoice for the service portion shall separately indicate the GST claimed by the successful tenderer along with their relevant GST registration number obtained by the successful tenderer.

11.0 GUARANTEE AND PERFORMANCE

11.1 The tenderer shall guarantee the process technology & know-how, workmanship and materials, and satisfactory operation of all items of the plant, machinery and equipment offered by him, with respect to all individual items and collective items comprising a group of equipment, and for the whole plant, machinery and equipment, in accordance with the performance requirements indicated in the Technical Specifications. In this respect, the offer shall include in clear detail the various outputs, consumption and performance guarantee for the Plant, Machinery and Equipment offered.

12.0 PRICES

12.1 The tenderer shall include in his offer prices for process technology & know-how, all materials and services as specified in the tender documents and in manner stated in the relevant articles/clauses/para of the Instructions to Tenderer.

12.2 Prices for technology, plant, machinery and equipment, spares, special maintenance tools etc. shall be indicated as per the price bid format enclosed. The prices shall be itemized in accordance with and as stated in, the tender specification and are to be quoted in the following two parts:

12.2.1 For all imported items of plant, machinery and equipment, spares, special maintenance tools, etc. prices shall be quoted for delivery, duly packed, FOB Port of shipment, storage at project site, with indication of estimated CIF charge separately.

12.2.2 For all indigenous items of plant, machinery and equipment, spares, special maintenance tools, etc. Prices shall be quoted for delivery, duly packed, FOR site including unloading & storage at project Site.

12.3 Itemized weights shall be given to each of the major items specified in the scope of supply. Weight of the supplies shall be indicative and there shall be no bearing on the quoted price for any variance with actual weights.

© 2022 MECON LIMITED. All rights reserved

12.4 Separate prices for supervision, complete Installation, start-up and putting into commission and other services, as indicated in Clause 3.6 and 3.7 above shall be quoted. These shall be inclusive of demonstration of performance parameters / tests.

12.5 For complete erection services, the detailed break-up of prices, such as cost of labour, supervisory personnel, consumable materials for erection, cost of site office, storage at site, provision of tools and tackles and accommodation and incidental expenses justifying the prices to be quoted under para
12.4 above, must be furnished in the tender.

12.6 VOID

12.7 If some of the Installation and Commissioning personnel are required by the Purchaser beyond the provisional acceptance date, which are not covered in the Contract Price, the successful tenderer shall provide the same. The terms and conditions for these should be stated in the offer.

13.0 PRICE VARIATION

13.1 Tenderers shall offer firm prices. ***No escalation*** of any kind whatsoever shall be allowed by the Purchaser under the Contract.

14.0 FOREIGN CURRENCY TO BE STIPULATED

14.1 The foreign currency in which payments have to be effected shall be clearly mentioned in the offer against each item of work and finally the total of quotes in foreign currency.

15.1 TERMS OF PAYMENT – Refer Appendix- 3 of Contract Agreement

16.0 LETTER OF CREDIT

16.1 The letter of credit for the imported plant, machinery and equipment shall be opened (single or multiple inline with clause 2.0 of Appendix – 3 of Section III of SCC-3) by the Purchaser within 15 (fifteen) days after receipt of the Bank Guarantee for security deposit and shall allow payment against the presentation of the following documents to the Bank:

(i). Bill of lading/Airway Bill/LR (three (3) negotiable and three (3) non-negotiable copies) or photo copies of LR in case of indigenous equipment.

(ii). Commercial invoice (six (6) original copies).

© 2022 MECON LIMITED. All rights reserved

(iii). Acceptance certificate for dispatch issued by the Purchaser.
Or
Inspection waiver certificate, if any, issued by the Engineer / Purchaser's authorized representative or Contractor's / his sub-contractor's internal inspection certificate / report.

(iv). Packing List (ten (10) copies).

(v). Certificate of Origin.

(vi). Copy of fax intimation to the Purchaser's insurer furnishing the shipment details.

16.2 All bank charges outside India including confirmation charges shall be to the successful tenderer's account. Charges for counter guarantee by Purchaser's bank in respect of Standby LC or BG shall be borne by the Purchaser. The Bank charges for opening and maintaining LC will be to Purchaser's account.

16.3 VOID .

16.4 The letter of credit shall be initially valid for a period of 21 (twenty one) days more than the Delivery period/shipment date for the realization of all the payments covered under the letter of credit with a provision of extension on request of successful tenderer without affecting the Work Schedule read with Clause 41.18.7 of the General Conditions of Contract. ***The letter of credit shall be established as per the enclosed format (to be finalized before signing of the Contract and shall be part of Contract***).

16.5 Purchaser shall establish irrevocable letter of credit for payment and unrestricted negotiation against letter of credit complying documents. The letter of credit shall ***be established by Purchaser within the period as spec ified above by a first class bank of international repute and shall be advised through succes***sful tenderer's designated bank. The transshipment and partial shipment shall be allowed.

16.6 Purchaser shall extend the validity of letters of credit if so required within 10 (ten) working days of written request by successful tenderer. In case the validity of the letters of credit needs to be extended due to reasons attributable to the successful tenderer (Contractor), then the Purchaser shall extend the validity of letters of credit at successful tenderer's expense. In case the validity of letters of credit needs to be extended due to reasons attributable to Purchaser, then the Purchaser shall extend the letters of credit at its own expense.

© 2022 MECON LIMITED. All rights reserved

16.7 Subject to the terms and conditions agreed between the parties, the letters of credit shall be subject to Uniform Customs and practice for documentary credits (2007 Revision) of International chamber of Commerce (ICC Publication No. 600).

17.0 CAPACITY OF THE TENDERER

Save as otherwise stated elsewhere, the following shall be the pre-qualifying criteria.

17.1 The tenderer should submit a detailed statement of similar plant, machinery and equipment supplied/built by him during the last ten (10) years along with process technology/ know-how or as stipulated in the tender.

17.2 The tenderer shall satisfy the Purchaser that he possesses the necessary and requisite technical experience, expertise and qualifications and that he has at his disposal suitable modern facilities and staff of specialized personnel to ensure that his contract work is of the best quality and workmanship, according to the latest engineering practice. The tenderer shall furnish necessary particulars in this behalf with the tender.

17.3 VOID

17.4 Each tenderer shall submit in his proposal a list of qualifying units. The list shall include for each unit the date of initial operation, the location, capacity and operating conditions.

17.5 **Legal Character and Capacity**

The tenderer shall clearly state about its legal character and capacity and satisfy the Purchaser that he is competent and authorized to submit the offer and to enter into a legally binding contract with the Purchaser. To this effect, any person giving an offer shall render documentary evidence that his signature on the offer, submitted by him, is legally binding upon himself, his firm or company, as the case may be.

17.6 **Authority of Person Signing Documents**

A person signing the tender or any document forming part of the Contract, on behalf of another, shall be deemed to warranty that he has authority to bind such other and if, on enquiry, it appears that the person so signing had no authority to do so, the Purchaser may, without prejudice to any other civil and criminal remedies, cancel the tender / contract and hold the signatory liable for costs and damages.

17.7 **Financial Capacity**

© 2022 MECON LIMITED. All rights reserved

The tenderer shall produce satisfactory proof such as annual reports, solvency certificate, etc. that he is financially in a position to fulfill the contractual obligation offered to be undertaken by him. In the case of Indian tenderers, the tenderer shall also submit the Income tax clearance certificate along with the tender and or as stipulated in the tender.

18.0 SUBMISSION OF TENDER

18.1 Tenders shall be sent by Speed post/Courier or handed over personally so as to reach the Purchaser before due date, time and at the place specified in the invitation to tender. They shall contain a special declaration that the tenderer agrees to hold the tender open for the period indicated in this invitation to tender.

18.2 Tenders must be submitted in four (4) copies in sealed covers, super scribing the reference number and date of opening on the covers.

18.3 Unsealed tenders, unsigned tenders, tenders which are incomplete, or otherwise considered defective, are liable to be rejected.

18.4 No tender will be received after the stipulated time and date due to any reason whatsoever.

18.5 Tenders shall be received at the office of Utkarsha Aluminium Dhatu Nigam Limited (UADNL), C/o MIDHANI, P.O-Kanchanbagh, Hyderabad-500058, India, by the date mentioned on page 1 herein and opened at the same place on the date and time mentioned on page 1 herein above or as per the latest corrigendum. Tenderers are at liberty to be present or authorize their representatives to be present at the time of the opening of the tenders.

19.0 PERIOD OF VALIDITY OF TENDER

19.1 The tender and the price quoted shall be deemed to remain valid for acceptance for a period of six (6) months from the date of opening of Part-I. In the event of termination of the tender process due to reasons not attributable to the successful tenderer the Purchaser shall release the Earnest Money Deposit (EMD) without interest. However, if the same pertains to the reasons attributable to the successful tenderer, the EMD of the successful tenderer shall be forfeited. In any of the cases whatsoever the Purchaser shall not be liable for any extra cost or expenses or shall not be liable to pay any claim or expenses to the successful tenderer.

20.0 LANGUAGE

20.1 The tender shall be submitted in the English language.

© 2022 MECON LIMITED. All rights reserved

21.0 ARRANGEMENT OF TENDER

21.1 The tender shall be neatly arranged, plain and intelligible, or printed on white paper, with consecutively numbered pages in solid binding. They should not contain any terms and conditions, prints or otherwise, which are not applicable to the tender.

21.2 Insertions, postscripts, additions and alterations shall not be recognized, unless confirmed by the tenderer's signature.

22.0 EARNEST MONEY

22.1 The tender must be accompanied by earnest money in the form of Demand Draft or Bank Guarantee or Electronic fund transfer, in favour of the Purchaser. Tenders not accompanied by earnest money will not be considered. The earnest money shall be kept deposited for such period as may be specified for keeping the tender open. The earnest money will not earn any interest. If the tenderer after submitting his tender and during the tender's validity period, withdraws his offer or modifies the terms and conditions thereof, in a manner not acceptable to the Purchaser, or upon award of contract does not submit Security Deposit then the earnest money shall be liable to be forfeited. Earnest Money shall be kept valid for eight (8) months and will be extended till the successful tenderer submits security deposit. The Bank Guarantee and security deposit shall be provided as per the enclosed formats.

22.2 On the acceptance of the tender, but not earlier than the expiry date of the period for which the tender is kept open, the earnest money will be returned to the unsuccessful tenderers.

22.3 Should an invitation to tender be withdrawn or cancelled by the Purchaser, which it shall have the right to do at any time, the earnest money paid with the tender will be returned.

22.4 On the tender being accepted by the Purchaser, an agreement in respect of the Contract, will be signed and executed by and between the Purchaser and the successful tenderer in accordance with the terms of Clause 10 of the General Conditions of the Contract. The successful tenderer shall also be required to deposit, within 30 (thirty) days of signing of the contract, Security Deposit at 3% of the total Contract Price with the Purchaser in the manner indicated in Clause 11 of the General Conditions of Contract. Should the successful tenderer, upon the acceptance of his tender, fails or refuses to duly sign the agreement or fails or refuses to furnish the security deposit within the period fixed by the Purchaser as indicated above, the earnest money shall be forfeited without prejudice to his being liable for any further loss or damage incurred in consequence by the Purchaser.

© 2022 MECON LIMITED. All rights reserved

22.5 The earnest money shall be returned to the successful tenderer after the security deposit has been furnished to the Purchaser in accordance with Clause 11 of the General Conditions of Contract.

23.0 NO CLAIM FOR COMPENSATION FOR SUBMISSION OF TENDER

2 3.1 The tenderer whose tenders are not accepted shall not be entitled to claim any costs charges a nd expenses of the tender, incidental to or incurred by them, through or in connection with their s ubmission of tenders, even though the Purchaser may elect to withdraw the invitation to tender.

24.0 INSURANCE POLICY FOR WORKMEN

24.1 The successful tenderer shall also take insurance policy for suitable amount for payment of an ex- gratia per head in case of fatal accident to the contract labour engaged by him in addition to the Workmen's Compensation Insurance Policy. As and when a fatal accident takes place, along with the workmen compensation, the Contractor is required to pay ex-gratia amount within 30 (thirty) days from the date of accident.

25.0 LOWEST TENDER MAY NOT NECESSARILY BE ACCEPTED

25.1 The Purchaser is not bound to accept the lowest or any tender or to assign reasons for its non- acceptance. The Purchaser also reserves the right to accept the tender either in whole or in part.

26.0 CONTRACT

26.1 On a tender being accepted by the Purchaser, a Contract will be signed and executed by and between the Purchaser and the successful tenderer in accordance with the terms of Clause 10 of the General Conditions of the Contract. The Purchaser and the successful tenderer will bear their respective cost incurred by them for signing the Contract.

27.0 NOTICES ON BEHALF OF PURCHASER

27.1 Notices and certificates on behalf of the Purchaser or Contractor in connection with the Contract may be given by a duly authorized officer of the Purchaser or Contractor whose name shall have been previously communicated by the Purchaser in writing.

28.0 ADDENDA TO TENDER DOCUMENTS

© 2022 MECON LIMITED. All rights reserved

28.1 The Purchaser reserves the right to issue addenda to the tender documents to clarify, modify, supplement or delete any of the conditions, clauses or items stated in the tender documents issued with this invitation to tender. Each addendum issued will be distributed to each tenderer or his authorized representative or published in newspapers / web and the addendum so issued shall form a part of the original tender documents to be reviewed as required.

29.0 QUERIES/CLARIFICATIONS

29.1 Queries/clarifications either technical, financial or commercial, if any, that may arise should be referred by the tenderer by mail/email/fax direct to the M/s Utkarsha Aluminium Dhatu Nigam Limited (UADNL), P.O. Kanchanbagh, Hyderabad-500058, India.

29.2 All tenderers are requested to take special note of the above procedure and observe the same strictly.

30.0 INTEGRITY PACT

30.1 In respect of all Contracts for procurement of capital equipment for a value exceeding Rs.1 Crores, tenderers shall sign 'Integrity Pact' with the Purchaser in the format enclosed.

31.0 ADDITIONAL INSTRUCTIONS TO THE TENDERERS

31.1 **Agency Commission:**

Either the Indian agent on behalf of the foreign principal or the foreign principal directly could bid in this tender but not both. Further, in case where an agent participates in this tender on behalf of one manufacturer, he is not entitled to quote on behalf of another manufacturer along with the first manufacturer for the same item.

The Seller confirms and declares to the Buyer that the Seller is the original manufacturer or authorized vendor of original manufacturer or Government sponsored/ Designated Export Agencies (applicable In the case of countries where domestic laws do not permit direct export by OEMs) of the stores referred to in this offer/ Contract/ Purchase Order and has not engaged any individual or firm, whether Indian or foreign whatsoever, to intercede, facilitate or in any way to recommend to Buyer or any of its functionaries, whether officially or unofficially, to the award of the contract / Purchase order to the Seller; nor has any amount been paid, promised or intended to be paid to any such individual or firm in respect of any such intercession, facilitation or recommendation. The Seller agrees that if

© 2022 MECON LIMITED. All rights reserved

it is established at any time to the satisfaction of the Buyer that the present declaration is in any way incorrect or if at a later stage it is discovered by the Buyer that the Seller has engaged any such individual/firm, and paid or intended to pay any amount, gift, reward, fees, commission or consideration to such person, party, firm or institution, whether before or after the signing of this contract / Purchase Order, the Seller will be liable to refund that amount to the Buyer. The Seller will also be debarred from participating in any RFQ / Tender for new projects / program with Buyer for a minimum period of five years. The Buyer will also have a right to consider cancellation of the Contract/ Purchase Order either wholly or in part, without any entitlement or compensation to the Seller who shall in such an event be liable to refund all payments made by the Buyer in terms of the Contract / Purchase Order along with interest at the rate of 2% per annum above LIBOR (London Inter Bank Offer Rate) (for Foreign vendors) and Base Rate of SBI plus 2% (for Indian vendors). The Buyer will also have the right to recover any such amount from any contracts / Purchase Orders concluded earlier with Buyer.

31.2 **Price Negotiations**

Price negotiations as such shall not be held, except in the case of negotiations with the lowest tenderer and accordingly, the tenderers shall have to submit their best Price Bids.

31.3 **Tender Documents through Website**

The tender documents are available in the Purchaser's website UADNL and also in website of NALCO & Midhani.

31.4 **Submission of Tender**

Tender may be submitted either by Speed Post, Courier or by person. The tender shall contain a special declaration that the tenderer agrees to hold the tender open for the period indicated in this Instruction to Tenderers. No tender will be received after the stipulated time and due date, due to any reason whatsoever.

The Tenderer shall along with its techno-commercial Bid submit one set of the Bidding Document duly signed and stamped on each page in original, in token of its acceptance.

The bids shall be submitted strictly as per the instructions of ITB.

31.5 **Mode of Submission of Tender**

Tenderers are required to submit their tenders in two (2) parts, namely,

© 2022 MECON LIMITED. All rights reserved

Part I: Techno-Commercial Bid with all terms & conditions-

Detailed technical specifications should be furnished along with catalogue/literature of original manufacturer and submitted separately super scribed as "Techno-Commercial Bid" (Un-priced) indicating the tender No. & due date of opening duly sealed.

Techno-commercial / Unpriced Bid (PART-I) will contain the following documents in 1 (one) original and 3 (Three) copies (4 sets in all). Bidder shall also submit one soft copy of the Techno Commercial Unpriced Bid (in CD) along with the techno commercial unpriced bid.

Part II: Price Bid-

The priced offer/quotation should be submitted separately not along with Part I super scribed as Price Bid indicating the Tender No. & due date of opening duly sealed.
Part I: Techno-Commercial Bid related all documents to be put inside one envelop super scribed as "Techno-Commercial Bid" (Un-priced) indicating the tender No. & due date of opening duly sealed & **Part II**: Price Bid document to be put inside another envelop super scribed as Price Bid indicating the Tender No. & due date of opening duly sealed. These two envelops (Part-I & Part-II) are to be put inside another envelop super scribed as Complete Bid Document indicating Tender No. & due date of opening duly sealed.

Techno-commercial/Unpriced Bid (PART-1) will contain the following documents :

1. BID Security/Earnest Money Deposit
2. Letter of submission.
3. Integrity Pact
4. Eligibility documents
5. Power of Attorney in favour of Bid Signatory.
6. Memorandum of Understanding (MOU)/Consortium Agreement as mentioned in the NIT and this ITB.
7. Signed & stamped copy of all bidding document pages by authorized persons of the bidder.

8. Bidder should not be under liquidation, court receivership or similar proceeding and shall submit self-declaration for the same.

9. Bidders are required to furnish the complete and correct information required for evaluation of their bids. If any information furnished is found to be

© 2022 MECON LIMITED. All rights reserved

false/misleading/incomplete, the same shall be considered as adequate ground for rejection of the bids

31.6 Unsealed and unsigned tenders and tenders that are incomplete or otherwise considered defective are liable to be rejected.

31.7 **Tender Opening**

A. **Techno-Commercial Bids**

After being satisfied that EMD of the tenderers have the required validity, Techno- Commercial Bids shall be accepted from the tenderers and shall be opened in the presence of authorized representatives of the tenderers who choose to be present at the time of tender opening. The comparative assessment of offers/bids received would be made on equal footing.

B. **Price Bids**

The Price Bids of only those tenderers will be opened whose Techno-Commercial Bid has been qualified for price bid opening.

Conditional discounts offered by the tenderers for coverage within a shorter period for early inspection/payment etc., shall not be considered at the time of evaluation of tenders.

31.8 **Pre-bid conference**

A pre-bid conference will be held for clarifying issues and clearing doubts, if any, about the specifications and other allied technical details of the plant, equipment and machinery & commercial terms projected in the bidding document. The date, time and place of pre-bid conference shall be indicated in the bidding document.

32.0 OVERRIDING EFFECT

32.1 In case of any inconsistency or repugnancy between any provision of Instructions to tenderer and General Conditions of Contract on the same subject matter, the provisions of the Instructions to tenderers shall prevail over General Conditions of Contract and will have over riding effect over those conditions.

© 2022 MECON LIMITED. All rights reserved

33.0 CONSORTIUM

33.1 If a tenderer submits his bid in consortium then they will supply copy of the consortium agreement among the members of the consortium clearly identifying their respective scope of Work, strength of the consortium members and other relevant details. In that case the members of the consortium will be jointly and severally liable to perform the entire Contract. With a view to ensure this, the bank guarantee towards Security Deposit for the entire Contract will be liable to be forfeited even for any breach or non-performance on the part of any of the consortium member.

34.0 Purchase preference shall be given to Class-I local suppliers as per general methodology specified in Annexure-8 of Section-VII (Preference to Make in India and granting of purchase preference to Class-I local suppliers).

The bidders shall furnish Local Content Declaration and Certification as per the format provided in Attachment – 1& 2 to Annexure-8 of Section-VII along with their bid.

In case a bidder does not submit the aforesaid (Local Content) declaration and certification or no value is indicated by the bidder or statement/any declaration like 'later', 'to be furnished later', 'NA' etc. are indicated by the bidder against value/percentage of local content, then the bidder shall not be considered as a Class-I local supplier and shall not be eligible for any purchase preference.

35.0 The government guidelines issued vide Department's Order (Public Procurement No.1 issued vide OM F.No.6/18/2019-PPD dated 23.07.2020.regarding "Restriction under Rule 144 (xi) in the General Finance Rules (GFRs) 2017 of Govt. of India shall be applicable, As per para 11 of the Order, in case of Works contracts, including turnkey contracts, contractors shall not be allowed to sub-contract works to any contractor from a country which shares a land border with India unless such contractor is registered with the Competent Authority.

In this context following is hereby clarified: A bidder is permitted to procure raw material, components, sub-assemblies etc. from the vendors from countries which shares a land border with India. Such vendors will not be required to be registered with the Competent Authority, as it is not regarded as "sub-contracting". However, in case a bidder has proposed to supply finished goods procured directly/ indirectly from the vendors from the countries sharing land border with India, such vendor will be required to be registered with the Competent Authority.

35.1 Restrictions on Public Procurement from certain countries

[All bidders shall comply with Rule 144 (xi) of the General Financial Rules (GFRs) 2017]

© 2022 MECON LIMITED. All rights reserved

I. Any bidder from a country which shares a land border with India will be eligible to bid in this tender only if the bidder is registered with the Competent Authority. The Competent Authority for the purpose of registration shall be the Registration Committee constituted by the Department for Promotion of Industry and Internal Trade {DPIIT}, Government of India.

II. "Bidder" (including the term 'tenderer', 'consultant' or 'service provider' in certain contexts) means any person or firm or company, including any member of a consortium or joint venture (that is an association of several persons, or firms or companies), every artificial juridical person not falling in any of the descriptions of bidders stated hereinbefore, including any agency branch or office controlled by such person, participating in a procurement process.

III. "Bidder from a country which shares a land border with India" for the purpose of this Order means: -

a. An entity incorporated, established or registered in such a country; or

b. A subsidiary of an entity incorporated, established or registered in such a country; or

c. An entity substantially controlled through entities incorporated, established or registered in such a country; or

d. An entity whose beneficial owner is situated in such a country; or

e. An Indian (or other) agent of such an entity; or

f. A natural person who is a citizen of such a country; or

g. A consortium or joint venture where any member of the consortium or joint venture falls under any of the above

IV. The beneficial owner for the purpose of (iii) above will be as under:

1. In case of a company or Limited Liability Partnership, the beneficial owner is the natural person(s), who, whether acting alone or together, or through one or more juridical person, has a controlling ownership interest or who exercises control through other means.

   Explanation—

   a. "Controlling ownership interest" means ownership of or entitlement to more than twenty-five per cent. of shares or capital or profits of the company;

   b. "Control" shall include the right to appoint majority of the directors or to control the management or policy decisions including by virtue of their shareholding or management rights or shareholders agreements or voting agreements;

2. In case of a partnership firm, the beneficial owner is the natural person(s) who, whether acting alone or together, or through one or more juridical person, has ownership of entitlement to more than fifteen percent of capital or profits of the partnership;

3. In case of an unincorporated association or body of individuals, the beneficial owner is the natural person(s), who, whether acting alone or together, or through one or more juridical person, has ownership of or entitlement to more than fifteen percent of the property or capital or profits of such association or body of individuals;

4. Where no natural person is identified under (1) or (2) or (3) above, the beneficial owner is the relevant natural person who holds the position of senior managing official;

5. In case of a trust, the identification of beneficial owner(s) shall include identification of the author of the trust, the trustee, the beneficiaries with fifteen percent or more interest in the

© 2022 MECON LIMITED. All rights reserved

trust and any other natural person exercising ultimate effective control over the trust through a chain of control or ownership.

V. An Agent is a person employed to do any act for another, or to represent another in dealings with third person.

VI. The successful bidder shall not be allowed to sub-contract works to any contractor from a country which shares a land border with India unless such contractor is registered with the Competent Authority.

Note:

- No registration is required for bidders from those countries [even if sharing a land border with India] to which the Government of India has extended the lines of credit or in which Government of India is engaged in developmental projects).
- Updated lists of countries to which lines of credit have been extended or in which development projects are undertaken are given in the website of the Ministry of External Affairs, Government of India.

Bidders have to submit Compliance declaration as per Certificate given below:

CERTIFICATE

Ref: TENDER No…… DATED:…….for "…… "

"We, M/s _____(Name of the bidder) have read the clause regarding restrictions on procurement from a bidder of a country which shares a land border with India and on sub-contracting to contractors from such countries; We certify that we are not from such a country or, if from such a country, we have been registered with the Competent Authority and will not sub-contract any work to a contractor from such countries unless such contractor is registered with the Competent Authority. We hereby certify that we are fulfilling all requirements in this regard [as per Rule 144 (xi) of the General Financial Rules (GFRs) 2017 of Ministry of Finance, Department of Expenditure, Government of India] and are eligible to be considered."

[Evidence of valid registration by the Competent Authority to be attached (if applicable)]

SIGNATURE OF THE BIDDER

© 2022 MECON LIMITED. All rights reserved

SECTION - III

CONTRACT AGREEMENT AND APPENDIX

© 2022 MECON LIMITED. All rights reserved

CONTRACT NO.

_____

DATED: _____

CONCLUDED WITH

_____

_____

_____

_____

FOR

_____

_____

_____

BY

उत्कर्ष UTKARSHA
(A Joint Venture Company of NALCO and MIDHANI)

UTKARSHA ALUMINIUM DHATU NIGAM LIMITED

PO-KANCHANBAGH, HYDERABAD, TELANGANA – 500 058, INDIA

Corporate Identity Number: U14299TG2019PLC134932

© 2022 MECON LIMITED. All rights reserved

PART I

CONTRACT AGREEMENT

THIS CONTRACT NO. _____ made this ___ Day of_____, _____(Year) at _____(Location).

BETWEEN

M/s Utkarsha Aluminium Dhatu Nigam Limited (UADNL), is a Joint Venture company of M/s National Aluminium Company Limited (NALCO), a Navratna CPSE under Ministry of Mines and M/s Mishra Dhatu Nigam Limited (MIDHANI), a Miniratna CPSE under the Ministry of Defence incorporated and registered under the Companies Act 1956 with its registered office situated at P.O Kanchanbagh, Hyderabad – 500 058, Telangana, India **(hereinafter referred to as "Purchaser")** which term or expression unless excluded by or repugnant to the context or the meaning thereof, shall be deemed to include its successors and permitted assigns, **OF THE ONE PART**,

AND

_____ (herein after called the "Contractor"), which term or expression unless excluded by or repugnant to the context or meaning thereof, shall be deemed to include its successors and permitted assigns, **OF THE OTHER PART**

AND WHEREAS

a) The Purchaser has decided to set-up **a high end aluminium alloy melting & casting facility for slabs & billets** at M/s **Utkarsha Aluminium Dhatu Nigam Limited (UADNL)**, Nellore, Andhra Pradesh (hereinafter referred to as the **"Facilities"**),and

b) The Contractor has declared that the Contractor has valuable and specialized knowledge and expertise for providing and executing the above Facilities and

c) The Contractor has declared that the Contractor is in a position to disclose, impart, deliver and transfer the requisite engineering data, drawings and documents of those items which are in the scope of the Contractor in this Contract, to the Purchaser for the engineering of the Facilities and for erection, start-up and commissioning of the Facilities with the aim to manufacture product as specified in the Contract, and

d) The Contractor has obtained clarifications on technical and commercial aspects, inspected the site and surroundings of Facilities and has examined and considered all other matters, conditions and things, probable contingencies and generally all matters incidental thereto and ancillary thereof, affecting the execution and completion of the Facilities, and

e) The Contractor has agreed to undertake design & engineering, structures & equipment, fabrication & supply of steel structures, manufacture & supply of plant and equipment, intermediate storage, insurance & handling, erection work, testing, pre commissioning, start-up & commissioning and demonstration & establishment of performance guarantee parameters of the Facilities, as detailed under Scope of Work.

© 2022 MECON LIMITED. All rights reserved

NOW IT IS HERE BY AGREED as follows:

Article 1 Contract Documents

1.1 **Definitions** (Reference GCC Clause 2 and SCC Clause 1)

1.2 **Contract Documents**

The following documents shall constitute the Contract between the Purchaser and the Contractor, and each shall be read and construed as an integral part of the Contract:

Part - I:	This Contract Agreement and Appendices hereto
Part - II:	Technical Specifications
Part - III:	Special Conditions of Contract
Part - IV:	General Conditions of Contract
Part - V:	Integrity Pact
Part - VI:	Specimen Forms of Bank Guarantees
Part - VII:	Any other Documents

1.3 **Order of Precedence** (Reference SCC Clause 15.0)

In the event of any ambiguity or conflict between the Contract Documents listed above, the order of precedence shall be the order in which the Contract Documents are listed in Article 1.2 (Contract Documents) above.

Article 2 Contract Price and Terms of Payment

2.1 **Contract Price** (Reference Appendix – 1)

The Purchaser hereby agrees to pay to the Contractor the Contract Price in consideration of the performance by the Contractor of its obligations hereunder. The Contract Price shall be _____ or such other sums as may be determined in accordance with the terms and conditions of the Contract.

2.2 **Terms of Payment** (Reference - SCC Clause 5.0)

The terms of payment are given in Appendix 3 this agreement.

© 2022 MECON LIMITED. All rights reserved

2.3 **Price Adjustment due to Variation in Price Indices** (Reference Appendix 3)

Price Adjustment is not applicable. The prices mentioned herein shall remain firm during the currency of the Project Contract and is not subject to any variation whatsoever except for variation on Taxes and duties as per SCC.

Article 3 **Effective Date**

3.1 The Contract shall be valid and binding from the date of its signature by both Parties herein.

3.2 The effectiveness or coming into Force of the Contract shall be the date on which the Contract is signed or 30 days from the date of issue of LOA whichever is earlier.

Article 4 **Scope of Facilities** (Reference GCC Clause 6.0 & Technical Specifications)

4.1 The Contract is for the execution of Scope of Facilities as specified in the GCC Clause 6.0 and Technical Specifications.

Article 5 **Time for Completion** (Reference SCC Clause 4.0 & Appendix-2)

5.1 The Facilities will be commissioned including PG test (PAC) within (Twenty Four) 24 months from the effective date of the Contract.

Article 6 **Consultant**

6.1 MECON Limited, Ranchi shall be the Consultant for this project. This consultant in relation to the Contract, shall have such functions as are delegated to him or as may be delegated to him by the Purchaser from time to time. Purchaser shall keep the Contractor informed of such delegation.

Article 7 **Sub contracting** (Reference GCC Clause 4)

7.1 This shall be as per GCC Clause 4.

Article 8 **Liquidated Damages** (Reference GCC Clause 41 and SCC Clause 14)

8.1 **Liquidated Damages due to Delay in Completion of Facilities**

Liquidated damages shall be levied against CONTRACTOR in case of unsatisfactory or delay in supplies and execution of the Contract beyond the scheduled date of PAC. LD shall be leviable @ 1% per week or part thereof subject to a maximum of 10% of Contract price excluding Taxes, Duties, levies, cess etc, if any.

© 2022 MECON LIMITED. All rights reserved

The Purchaser may, without prejudice to any other method of recovery, deduct the amount of such damages from any amounts in his hands due to the CONTRACTOR. The payment or deduction of such damages shall not relieve the CONTRACTOR from his obligations to complete the work or from any other of his obligations and liabilities under the Contract. Being, delays beyond control of Contractor need to be resolved mutually.

NOTE:

1. If there is delay in supply of equipment but issue of PAC is within due date as per Contract, no LD shall be levied for delayed supply. Only, the date of issue of "Provisional Acceptance Certificate (PAC)" shall be considered for application of LD.

2. GST at applicable rates shall be charged on the Liquidated Damages as stated above and recovered from the Contractor, for which a tax invoice shall be issued by the Purchaser to the Contractor. Where the contract price is quoted in foreign currency, the amount of LD shall be converted into equivalent INR by applying the RBI reference rate on the date of invoice, and GST shall be charged on such equivalent value and recovered from the contractor along with the Liquidated Damages. A tax invoice in INR shall be issued to the Contractor.

Article 9 **Arbitration**

9.1 This shall be as per Clause 40 of GCC.

Article 10 **Liability of Govt. of India** (Reference GCC Clause 46)

10.1 It is expressly understood and agreed between the Contractor and the Purchaser that the Purchaser is entering into this Contract solely on its own behalf and not on behalf of any other person or entity. It is expressly understood and agreed that the Purchaser is an independent legal entity with power and authority to enter into Contracts solely on its own behalf under the applicable laws of India and general principles of Contract Law.

Article 11 **Appendices**

11.1 The following Appendices shall be deemed to form an integral part of this Contract Agreement. Reference in the Contract to any Appendix shall mean the Appendices attached hereto, and the Contract shall be read and construed accordingly.

1 Price Schedule
2 Time Schedule
3 Terms of Payment

© 2022 MECON LIMITED. All rights reserved

Article 12

No modifications of this Contract including Appendices hereto, shall be valid unless the same is agreed to in writing by the parties and specifically mentioned as an amendment to the Contract.

IN WITNESS WHEREOF the Purchaser and the Contractor have caused this Agreement to be duly executed by their duly authorized representatives the day and year first above written.

Signed by for and on behalf of the Contractor

_____
[Signature]

_____
[Designation]

In the presence of_____

1) _____
[Signature]

_____
[Designation]

2) _____
[Signature]

_____
[Designation]

Signed by for and on behalf of the Purchaser

_____
[Signature]

_____
[Designation]

In the presence of_____

1) _____
[Signature]

_____
[Designation]

2) _____
[Signature]

[Designation]

© 2022 MECON LIMITED. All rights reserved

APPENDIX – 1

PRICE SCHEDULE

Price schedule shall be prepared as per Price Bid format of the L1 bidder prior to finalization of the Contract Document.

© 2022 MECON LIMITED. All rights reserved

APPENDIX - 2

TIME SCHEDULE

1.0 Time Schedule for Completion of the Facilities

1.1 The Facilities will be commissioned including PG test within (Twenty Four) 24 months from the effective date of the Contract as per **Article-5** of the Contract Agreement. The overall time schedule for completion of the Facilities is given below

S. No.	Items of Work	Commencement (No. Of Month from Effective Date)	Completion (No. Of Month from Effective Date)
1.	Basic Engineering		
2.	Detailed Design Engineering		
3.	Civil Work		
4.	Supply / Delivery of:		
i)	Building Steel Structures & Sheeting		
ii)	Mechanical Plant & Equipment including Technological Structures		
	a) Imported		
	b) Indigenous		
iii)	Electrical Plant & Equipment:		
	a) Imported		
	b) Indigenous		
iv)	Refractories:		
	a) Imported		
	b) Indigenous		
5.	Erection of Building Steel Structures & Sheeting:		
6.	Erection:		
i)	Mechanical Plant & Equipment		
ii)	Electrical Plant & Equipment		
7.	Erection of Refractories		
8.	i) Cold Test ii)Hot Test		
9.	Commissioning including Performance Guarantee (PAC)		24

© 2022 MECON LIMITED. All rights reserved

APPENDIX - 3

TERMS OF PAYMENT

1. General

1.1 In accordance with the provisions given hereunder, the Purchaser shall pay the Contractor for the Scope of Facilities detailed under **Clause 6** of GCC & Technical Specifications, on the basis of the price break-up given in the Price Schedule (**Appendix-1**) and Billing Schedule

1.2 Subject to other provisions of the Contract, the payment shall also be made based on the following:

1.2.1 All payments shall be made directly by the Purchaser to the Contractor unless otherwise provided in the Contract or agreed between the Parties.

1.2.2 If as per provisions of Contract any payment is made directly by the Purchaser to the Sub-Contractor, such payments shall constitute a proper discharge of Purchaser's obligations for such payments to the Contractor.

1.2.3 The payments will be made in the currencies quoted by the Contractor and included in the Contract unless otherwise agreed between the Parties.

1.2.4 The Contractor shall furnish the detailed Billing Schedule, for each item under the scope of work of the Contract, for the approval of Purchaser, which after the approval only, will be the basis for submission of invoices for progress payments.

1.2.5 The Purchaser shall release the payment to the Contractor in 30 days from the date of receipt of the complete and correct invoices and relevant documents.

1.2.6 All interim / progress shall be regarded as payments by way of advance against the final payment only and not as payment for work completed and shall not preclude defective / imperfect / incomplete facilities to be removed. It will not be considered as an admission by the Purchaser of the due performance of the Contract, or an part thereof by the Contractor nor shall it preclude, determines or affect in any way the powers of the

© 2022 MECON LIMITED. All rights reserved

Purchaser under these conditions or in any way the powers of the

2.0 **TERMS OF PAYMENT**

PROVIDING PROCESS TECHNOLOGY & KNOW-HOW AND SUPPLY OF PLANT, MACHINERY & EQUIPMENT

2.1 **PROCESS TECHNOLOGY & KNOW-HOW FOR MELTING & CASTING OF HIGH END ALUMINIUM ALLOYS PRODUCTS**

(i) Ten (10) percent of the Contract price for "Technology Supply" plus GST/applicable taxes on

a. Furnishing of Security Deposit as per clause No.4.0 of SCC.

b. Submission of invoice in triplicate and Submission of Bank guarantee of similar amount from a Nationalized Bank/ Scheduled Commercial Bank encashable at Hyderabad, INDIA in the prescribed proforma for advance payment along with 12% interest per annum valid till issue of PAC by UADNL.

(ii) Ten (10) percent of Contract price for "Technology Supply" plus GST/applicable taxes on

a. Submission of invoice in triplicate
b. Submission of Bank guarantee of similar amount from a Nationalized Bank/ Scheduled Commercial Bank encashable at Hyderabad, INDIA in the prescribed proforma for advance payment along with 12% interest per annum valid till issue of PAC by UADNL.
c. Furnishing of the basic data for equipment, process technology, Quality checklist , details of lab testing facility.

(iii) Twenty (20) percent of the Contract price for "Technology Supply" plus GST/applicable taxes on

a. Submission of invoice in triplicate

b. Submission of Bank guarantee of similar amount from a Nationalized Bank/ Scheduled Commercial Bank encashable at Hyderabad, INDIA in the prescribed proforma for advance payment along with 12% interest per annum valid till issue of PAC by UADNL.

c. Completion of the last supply Consignment of equipment.

© 2022 MECON LIMITED. All rights reserved

(iv) Twenty (20) percent of the Project Contract price for "Technology Supply" plus GST/applicable taxes

a. After completion of erection and commissioning & issue of Provisional Acceptance Certificate (PAC) by Purchaser
b. submission of invoice in triplicate
c. Submission of documents related to Basic data, Detailed Process design & Technology adopted, Detailed Quality check procedures, and engineering manuals etc.

(v) The Twenty per cent (20 %) of the Project Contract price for "Technology Supply" plus GST/applicable taxes after

- Acquiring the product certification for Four (04) Alloy grades from the prescribed agencies & successful transfer of process technology for these grades.
- Submission of invoice in triplicate

(vi) The last Twenty per cent (20 %) of the Project Contract price for "Technology Supply" plus GST/applicable taxes after

- Acquiring the product certification for remaining alloy grads from the prescribed agencies & successful transfer of process technology for these grades.
- After certification of UADNL towards acceptance of the **process technology & know-how for melting & casting of high end aluminium alloys products.**

- Submission of invoice in triplicate

NOTE : GST/applicable taxes for "Technology supply" shall be paid as and when Invoice is raised

2.2 DESIGN & ENGINEERING OF PLANT, MACHINERY & EQUIPMENT

(i) Ten (10) percent of the Project Contract price for Design & Engineering i.e., plus GST/applicable taxes on

a. Furnishing of Security Deposit as per clause No.4.0 of SCC.

b. Submission of invoice in triplicate and Submission of Bank guarantee of equal amount from a Nationalized Bank/ Scheduled Commercial Bank encashable at Hyderabad, INDIA in the prescribed proforma for advance payment along with 12% interest per annum valid till supply of last consignment.

© 2022 MECON LIMITED. All rights reserved

(ii) Ten (10) percent of the Contract price for Design & Engineering plus GST/applicable taxes on

a. Submission of invoice in triplicate

b. Submission of Bank guarantee of equal amount from a Nationalized Bank/ Scheduled Commercial Bank encashable at Hyderabad, INDIA in the prescribed proforma given at section VII hereof for advance payment along with 12% interest per annum valid till supply of last consignment.

c. Furnishing of the following specified documents and drawings

- Name plate and numbering system
- Approved list of drawings with submission schedule
- Approved layout drawings including location of main equipment
- Certified foundation load data drawing including complete assignment drawing and bolt plan.
- Complete Electrical single line diagrams
- Data on cranes including capacity, hook approach, number of cranes, rail height and height of bay
- Detailed Quality Assurance Plan (QAP)
- Detailed approved Billing Schedule

(iii) Sixty (60) percent of the Contract value for "Design & Engineering" plus GST/applicable taxes in total four (4) equal instalments. Payment of each instalments shall be made against submission of Bank Guarantee in the prescribed proforma of equal amount valid till completion of last supply. First instalment of Payment shall be made on commencement of 1st Lot Supply. Release of balance three instalments shall be spread over total delivery time frame up to completion of last supply at Purchaser's Site.

(iv) Ten (10) percent of the Contract price plus GST/applicable taxes for "Design & Engineering" after completion of erection and commissioning & issue of Provisional Acceptance Certificate (PAC) by Purchaser on submission of invoice in triplicate and certificate issued by Purchaser on "Site cleaning".

(v) The last Ten per cent (10 %) of Contract price plus GST/applicable taxes for "Design & Engineering" after

- Certificate from purchaser that all drawings and documents as given Contract specification have been received and accepted.
- Submission of invoice in triplicate
- Submission of Final Acceptance Certificate (FAC) issued by the Purchaser

Or

Submission of Bank Guarantee from a Nationalized Bank/ Scheduled Commercial Bank encashable in Hyderabad, INDIA for ten (10) percent of

© 2022 MECON LIMITED. All rights reserved

Contract price for "Design & Engineering" (excluding taxes and duties) in the prescribed proforma valid for twelve(12) months from the date of Provisional acceptance certificate (PAC).

NOTE : GST/applicable taxes for "Design & Engineering" shall be paid as and when Invoice is raised.

2.3 **SUPPLY OF PLANT, MACHINERY & EQUIPMENT**

(i) Ten (10) percent of the Contract price for supplies (excluding taxes and duties) shall be paid on

a. Furnishing of Security Deposit as per clause No.4.0 of SCC.

b. Submission of invoice in triplicate and Submission of Bank guarantee of similar amount from a Nationalized Bank/ Scheduled Commercial Bank encashable at Hyderabad, INDIA in the prescribed proforma for advance payment along with 12% interest per annum valid till supply of last consignment.

(ii) Ten (10) percent of the Contract price for supplies (excluding taxes and duties) shall be paid upon

a. Submission of invoice in triplicate
b. Submission of Bank guarantee of similar amount from a Nationalized Bank/ Scheduled Commercial Bank encashable at Hyderabad, INDIA in the prescribed proforma for advance payment along with 12% interest per annum valid till Supply of last consignment.
c. Furnishing of the following specified documents and drawings

- Name plate and numbering system
- Approved list of drawings with submission schedule
- Approved layout drawings including location of main equipment
- Certified foundation load data drawing including complete assignment drawing and bolt plan.
- Complete Electrical single line diagrams
- Data on cranes including capacity, hook approach, number of cranes, rail height and height of bay
- Detailed Quality Assurance Plan (QAP)
- Detailed approved Billing Schedule

(iii) Sixty (60) percent of the Contract price for supplies with 100% Taxes & Duties of each and every part dispatch of equipment in lots by supplier payable against presentation of necessary shipping documents as mentioned below against Purchaser's Site dispatch and Payment of each lot shall be made against submission of Bank Guarantee of equal amount from a Nationalized Bank/ Scheduled Commercial Bank encashable at Hyderabad, INDIA in the prescribed proforma, valid till last supply at Purchaser's Site.

© 2022 MECON LIMITED. All rights reserved

The shipping documents required to be submitted by the supplier are:

i) Four (4) copies of the Invoice duly signed for the material dispatched,
ii) Tax invoice (original and duplicate)
iii) Consignee Copy of Lorry Receipt (LR), freight prepaid, Clean on Board Bill of Lading as defined in Incoterms 2010. - 2 negotiable and 2 non negotiable copies.
iv) Certificate of origin – 2 copies
v) Test / Manufacturer's certificate – 4 copies.
vi) Packing list in five (5) copies.
vii) Dispatch Advice issued by the Purchaser, in four (4) copies.
viii) Copy of Insurance policy coverage (single page cover note).

(iv) Ten (10) percent of the Contract price for supplies (excluding taxes and duties) after completion of erection and commissioning & issue of Provisional Acceptance Certificate (PAC) by Purchaser on submission of invoice in triplicate and certificate issued by Purchaser on "Site cleaning".

(v) The last Ten per cent (10 %) of the Contract price for supplies (excluding taxes and duties) after

- Certificate from purchaser that all drawings and documents as given in contract specifications have been received and accepted.
- Submission of invoice in triplicate
- Submission of Final Acceptance Certificate (FAC) issued by the Purchaser

Or

Submission of Bank Guarantee from a Nationalized Bank/ Scheduled Commercial Bank encashable in Hyderabad, INDIA for ten (10) percent of Contract price for "Design & Engineering" (excluding taxes and duties) in the prescribed proforma valid for twelve(12) months from the date of Provisional acceptance certificate (PAC).

2.4 **COMPLETE ERECTION, START UP AND PUTTING INTO COMMISSIONING**

The terms of payment shall be hereunder:

(i) Ten (10) per cent of the Contract price plus GST/applicable taxes for erection & commissioning shall be paid on the opening of crates and packing cases to the extent required to start erection, inspection of equipment, repair and replacement if necessary and transportation of equipment to the erection site.

(ii) Forty (40) per cent of the Contract price plus GST/applicable taxes for erection & commissioning shall be paid on the checking of foundation, including final

© 2022 MECON LIMITED. All rights reserved

adjustment of foundation, pre-assembly of equipment if necessary and placing of equipment on foundation.

(iii) Forty (40) per cent of the Contract price plus GST/applicable taxes for erection & commissioning shall be paid on final alignment, lining, leveling, grouting and connecting-up electric power supply, water and utilities.

(iv) Ten (10) per cent of the Contract price plus GST/applicable taxes for erection & commissioning shall be paid on issue of Provisional Acceptance certificate (PAC).

NOTE:GST/applicable taxes for "Erection, Start up and putting into commissioning" shall be paid as and when Invoice is raised.

2.5 **SUPERVISION FOR ERECTION, START UP AND PUTTING INTO COMMISSIONING**

(i) 80 % of Contract price for supervision of erection, startup and putting into commissioning in equal monthly installments spread over the contractual erection time schedule, the first installment being payable on the commencement of erection subject to adjustment if the progress of work is not according to schedule.

(ii) 20% of Contract price for supervision of erection, startup and putting into commissioning on the issuance of Provisional Acceptance certificate (PAC).

NOTE: GST/applicable taxes for "Supervision for Erection, Start up and putting into commissioning" shall be paid as and when Invoice is raised.

2.6 **SPARES FOR TWO YEARS OPERATIONS AND SPECIAL TOOLS FOR REPAIR & MAINTENANCE OF PLANT, MACHINERY & EQUIPMENT**

(i) Ninety percent (90%) of the value of Spares and Special tools plus 100% Taxes & Duties against the presentation of necessary documents proving that the goods are delivered FOR Site/FOB in a single lot or mutually agreed multiple lots and Payment of each lot shall be made against submission of Bank Guarantee of equal amount from a Nationalized Bank/ Scheduled Commercial Bank encashable at Hyderabad, INDIA in the prescribed proforma, valid till last supply of spares & special tools at Purchaser's Site.

(i) Ten (10%) of the value of Spares and Special tools ordered after issue of Provisional Acceptance Certificate (PAC).

3.0 **MODE OF PAYMENT**

For Import Suppliers: Purchaser shall make payment through Irrevocable Letter of Credit established by Purchaser or Telegraphic Transfer for 2.1 (i), (ii) & (iii); 2.2 (i), (ii) & (iii); 2.3 (i), (ii), & (iii); and 2.6 (i) . All other payments shall be made through RTGS/Telegraphic Transfer within 30 days from the submission of specified documents as per clause 5.0 of SCC.

© 2022 MECON LIMITED. All rights reserved

Mode of Payment is to be indicated in the techno-commercial offer. If not mentioned, all payments shall be through Telegraphic Transfer only.

For Indigenous Suppliers: All Payments shall be made through RTGS within 30 days from the date of submission of documents as per clause 5.0 of SCC.

4.0 **BANK CHARGES:**

All Bank Charges from supplier's side are to supplier's account and Purchaser's side to Purchaser's account.

© 2022 MECON LIMITED. All rights reserved

SECTION – IV: PRICE BID FORMAT & EVALUATION PROCEDURE

SECTION-IV : PRICE BID FORMAT & EVALUATION PROCEDURE

1. First of all, compliance of requirement pertaining to EMD shall be ascertained. Bids not accompanied by EMD shall not be opened further and such Bidder shall not be allowed to attend the further proceedings of the Bid Opening.

Thereafter, credentials of bidders shall be evaluated with respect to eligibility requirements. Bidders who meet the eligibility (technical & financial) requirements shall be eligible for further evaluation. Techno-commercial Bids of Bidders who do not fulfil the eligibility requirements shall not be evaluated.

- Subsequently, Techno-commercial evaluation shall be carried out based on the Tender documents and the bids submitted in response. The Bids shall be evaluated as per tender provision and complete scope of work. If necessary, techno-commercial discussions may be held with the Bidders.

PRICE BID FORMAT

Providing Process Technology and Design, Supply, Erection and Commissioning, Supervision of Melting and Vertical Direct Chill (DC) Casting facility (Package -01) for Aluminium Alloy Plant.

Prices Offered shall remain firm till completion of the Project.

A. For Indigenous offers (IN INR):

Sl. No.		Description	Qty	Basic Price	G S T	GST (%)	Total FOR UADNL	HSN Code
1	**Technology for Package-1**							
	1.1	Providing Technology for process, Product Machinery & equipment, Product certification, etc.						
2	**Design & Engineering for Package-1**							

3	**Supply of Plant, Machinery & equipment/materials/technological structures incl. Commissioning & Insurance Spares, Special Tools & Tackles, Initial Fills etc.**							
	3.1	Melting Furnaces with Auxiliary equipment etc.						
	3.2	Holding Furnaces with Auxiliary equipment etc.						
	3.3	VDC casting with Auxiliary equipment etc.						
	3.4	Homogenizing furnace with Auxiliary equipment etc.						
	3.5	Ultrasound Inspection system with Auxiliary equipment etc.						
	3.6	Band sawing & scalping Machine, auxiliary equipment etc.						
	3.7	Electrics and Automation system (upto Level - 2)						
	3.8	Spares for Two years operations & special tools for Repair & Maintenance of Plant, Machinery & equipment						
	3.9	Any other item not covered above but required for completion of the work						
		Total Price for A (3.1 to 3.9)						
4	**Installation/Erection and commissioning etc.** Storage, handling, construction & erection/installation of plant/equipment/technological structure, Training, commissioning							

	& conducting PG Test						
5	Supervision charges in India during erection, startup, putting in to commissioning & PG Test						
	Total Price for A (1 to 5)						

B. For Import offers:

Providing Process Technology, Design, Supply, Erection and Commissioning, Supervision of Melting and D.C Casting facility (Package -01) for Aluminium Alloy Plant (In USD/ EURO/GBP)

Sl. No.		Description II	F O B Port of Loading III	Any other terms as per INCOTERMS 2020	Custom Tariff Code under Harmonised System
		CURRENCY QUOTED & INCO TERMS QUOTED			
1	**Technology for Package-1**				
	1.1	Technology for Process, Product, Machinery & equipment, Product certification, etc.			
2	**Design and Engineering for Package-1**				
3	**Supply of Plant, Machinery & equipment/materials/technological structures incl. Commissioning & Insurance Spares, Special Tools & Tackles, Initial Fills etc.**				
	3.1	Melting Furnaces with Auxiliary equipment etc.			
	3.2	Holding Furnaces with Auxiliary equipment etc.			
	3.3	VDC casting with Auxiliary equipment etc.			
	3.4	Homogenizing furnace, auxiliary equipment etc.			

	3.5	Ultrasound Inspection system with auxiliary equipment etc.			
	3.6	Band sawing & scalping Machine, auxiliary equipment etc.			
	3.7	Electrics and Automation system (upto Level - 2)			
	3.8	Spares for Two years operations & special tools for Repair & Maintenance of Plant, Machinery & equipment			
	3.9	Any other item not covered above but required for completion of the work			
		Total Price for supply B (3.1 to 3.9)			
	4	**Installation/Erection and commissioning etc.** Storage, handling, construction & erection / installation of plant / equipment / technological structure, Training, testing, startup, commissioning & conducting PG Test			
	5	Supervision charges in India during erection, startup, commissioning & PG Test			
		Total Price for B (1 to 8)			

NOTES:

1) **Indian bidder shall quote in INR only. Bids in Foreign Currency shall be evaluated based on RBI reference exchange rate prevailing on the date of opening of techno-commercial bid (Part-I) The quotation should be in single currency and EURO/USD/GBP only.**

2) The fuel consumption of melting and holding furnaces shall be considered **as loading parameter while evaluating the bid.** The loading formula shall be as follows:-

L= (PG-PL) X C X DF X 5500

Where:

L = Loading on Tenderer's price.

PG = Guaranteed utility consumption by the Tenderer.

PL = Lowest guaranteed consumption amongst the Tenderers.

C = Unit cost of utility

DF= Discount Factor calculated as follow:

$$DF= \sum_{n=2}^{n=k+1}[1 \div \{1 + \left(\frac{x}{100}\right)\}^{n}]$$

Where

K= 20 years (from 2nd to 21st year as 1st year is considered as startup of operation), the life of the equipment.

X= Interest rate = 10%

5500 = Operating hours for one furnace to achieve the considered production, which may change to annual Production rate and the likes as required.

3) If the lowest Tenderer status changes due to the above loading, the new lowest Tenderer emerged based on the evaluated price has to submit a BG equivalent to the loading amount on the pre-evaluated lowest Tenderer in addition to SDBG.
4) The Lowest Bid will be decided upon the lowest of total price quoted by the particular bidder as per the Price schedule given in Appendix-1 of Contract Agreement after loading the amount due to fuel consumption of Melting & Holding Furnaces as per formula indicated above (Sl. No.2).
5) ***L1 shall be based on sum of total price for landed cost at UADNL, Nellore with net of all taxes and duties (after input tax credit) including the loading amount due to fuel consumption of Melting & Holding furnaces.***
6) Customs Tariff Code for various components shall be indicated in the offer.
7) Above break –up pertains to supply of major items. It will be the responsibility of the CONTRACTOR to supply all materials/equipment required for completion of work as per the Contract/TS, irrespective of whether all items are identified above or not.
8) Offers in Foreign Currencies shall be normally on **C&F basis/FOB basis**. However, in case any other Terms as per INCOTERMS are quoted, FOB price must be indicated. UADNL shall reserve the right to place order on either FOB or other Terms as per INCOTERMS 2020.
9) Price quoted in foreign currency should be including duties & taxes payable in the respective foreign country AND/OR Income tax/withholding tax payable in India.

10) Indicate whether the shipment shall be FCL (Full Container Load) or LCL (Low Container Load) and number of containers in the techno-commercial bid. In case the same is not feasible, indicate the volume and weight of the consignments.
11) Exchange rate for the foreign currencies shall be considered as on final scheduled techno-commercial bid opening date. Exchange rate shall be taken from the website of RBI.
12) Landed Costs shall be calculated on FOB Costs considering the following:
    a. Freight, Insurance and Clearance Charges (as per the port of Loading) till receipt of material at UADNL, Nellore.
    b. Duties and charges applicable after considering Tax Credits.
    c. LC charges prevailing as on techno-commercial bid opening date as per SBI taking into account the Delivery Period.
    d. Pre Dispatch Inspection/Training Charges, if any, for Inspection by UADNL
    e. Integrated GST presently @18% or as applicable.
13) Freight & Insurance charges for Landed cost calculations:

    a) In case of C & F Basis or FOB basis , freight charges either (i) from offer of bidder or (ii) internal prices of UADNL shall be considered, whichever is lower.

    b) In case of FOB Offers, freight charges as per UADNL internal prices shall be considered.

    c) Insurance charges prevailing as on Techno Commercial Bid opening date (Currently 0.031% of C&F Value) shall be loaded for C & F and FOB offers.

14) Item wise Tax rate/ GST to be quoted with applicable HSN / SAC code.
15) Lump sum Price for spares (itemized list with/without Price break up and along with quantity of each item) with applicable Taxes & duties for "Spares for two year operations and Maintenance" must be quoted by the supplier.

    Where only lump sum price has been quoted for spares, Itemized List with price breakup (limiting to Lump sum value as quoted) shall be given by supplier within 2 months from the Effective Date of Contract.

16) Un-priced Bid in this format must be submitted along with the Techno Commercial Bid mentioning the word "Quoted" or "Not Quoted" as applicable against each of the respective item.
17) Bidders are also requested to quote their prices for items in the Annexure-A below.
18) The price quoted against the items in the **Annexure-A** shall not be considered for evaluation of the L1 Bidder.

Annexure-A

For Indigenous offers (IN INR):

Sl		Description	Qty	Basic Price	G S T	GST (%)	Total FOR UADNL	HSN Code	
1	Providing Technology support for 05 years after PAC for new product development, etc.								
2	Electrics and Automation system (up to Level – 2) for the Package -1 compatible to adopt with Industry 4.0 at later date								

For Import offers:

Sl		Description	Qty	F O B Port of Loading III	Any other terms as per INCOTERMS 2020	Custom Tariff Code under Harmonised System
1	Providing Technology support for 05 years after PAC for new product development, etc.					
2	Electrics and Automation system (upto Level – 2) for the Package -1 compatible to adopt with Industry 4.0 at later date					

Special Note: Either of Sl. No 3.7 of Price Bid Format or Sl. No. 2 of Annexure - A of Price bid Format shall be considered for placement of the Contract which shall be decided by UADNL prior to placement of the Contract, ***provided L1 position is not getting changed for such consideration.***

SECTION-V
SPECIAL CONDITIONS OF CONTRACT

CONTENTS

SL.NO	DESCRIPTION	PAGE NO.
1.0	FIRMNESS OF PRICE	2
2.0	EFFECTIVE DATE OF CONTRACT	2
3.0	COMPLETION PERIOD	2
4.0	SECURITY DEPOSIT	2-3
5.0	SHIPPING DOCUMENTS	3-4
6.0	INSURANCE	4
7.0	TAXES AND DUTIES	4-7
8.0	PERFORMANCE AND GUARANTEE, DEFECT LIABILITY	7-12
9.0	COMPLETENESS OF EQUIPMENT	12
10.0	PROGRESS INSPECTION, PRE DISPATCH INSPECTION AND TRAINING	12
11.0	QUALITY ASSURANCE PLAN	12-13
12.0	LIQUIDATED DAMAGES FOR DELAY IN SUPPLIES AND EXECUTION	13
13.0	ORDER OF PRECEDENCE	13
14.0	JURISDICTION	14
15.0	LIABILITIES	14
16.0	PATENT INFRINGEMENT & COPYRIGHT	14
17.0	INTEGRITY PACT	14
18.0	DISCLAIMER	14
19.0	OTHERS	14-15
20	ELIGIBILITY CRITERIA	15

© 2022 MECON LIMITED. All rights reserved

SPECIAL CONDITIONS OF CONTRACT

The following Special Conditions of Contract [**SCC**] shall supplement the General Conditions of Contract [**GCC**]. Whenever there is a conflict, the provisions herein shall prevail over those in the **GCC**. The corresponding clause number of the **GCC** is indicated in parentheses

1.0 FIRMNESS OF PRICE

The quoted price shall remain firm during the currency of the Contract (to be signed at a later date) and is not subject to any variation whatsoever except for variation on Taxes and duties as per Clause 11.1 and price offer will be valid for 180 days.

2.0 EFFECTIVE DATE OF CONTRACT

The Contract (to be signed at a later date) shall be valid and binding from the date of its signature by both Parties herein.

The effectiveness or Coming into Force of the Contract shall be the date on which the Contract is signed or 30 days from the date of issue of LOA whichever is earlier.

3.0 COMPLETION PERIOD

FOR Purchaser's site delivery of Plant, machinery & equipment (as detailed in Price Bid Format at Clause 1.0) shall be completed by end of 18th month from the Effective Date of the Contract. In case of C & F, delivery of Plant, machinery & equipment shall be completed by 17.5 Months from the Effective Date of the Contract. In case of FOB, delivery of Plant, machinery & equipment shall be completed by end of 16th month from the effective date of the contract.

Erection, Start Up and putting into commissioning (Provisional Acceptance) shall start from 17th month and shall be completed by end of 24th month from the Effective Date of Contract.

The overall time schedule for commissioning / Completion of the plant & equipment covered under this package shall be 24 months from the effective date of contract.

4.0 SECURITY DEPOSIT [Ref GCC Clause 11.0]

Security Deposit valuing 3(THREE)percent of the Total Contract price (including taxes and duties), valid till the completion of installation and commissioning of the plant, machinery and equipment and issue of PAC upon successful completion of the PG test, shall be deposited by the supplier online preferably or through Bank Guarantee(in the prescribed proforma given at part VII) from a Nationalized Bank or Scheduled commercial Bank

© 2022 MECON LIMITED. All rights reserved

encashable in Hyderabad, INDIA. This Guarantee should be furnished immediately, but in any case, not later than thirty (30) days from the date of signing the Contract.

This amount is liable to be forfeited, in full or in part, for breach of any of the terms and conditions of the Contract (to be signed at a later date) by the supplier.

Encashment of performance security deposit is liable to GST at applicable rate.

5.0 SHIPPING DOCUMENTS

For Indigenous Suppliers:

The Shipping documents required to be furnished for supplies are as follows:

i) Four (4) copies of the Tax Invoice duly signed for the material dispatched, indicating the payments already received.
ii) Consignee Copy of Lorry Receipt (LR), freight prepaid
iii) Packing list in four (4) copies.
iv) Dispatch Advice issued by the Purchaser, in four (4) copies.
v) Copy of Insurance policy coverage (single page cover note)

For Import Suppliers:

The following documents will be furnished for each lot/consignment for purpose of payment. Clear instruction shall be given by you to the bank to forward the following documents without any delay to our bank(Bank detail will be provided to the successful bidder at the time of contract signing).

a. Clean on Board Bill of Landing / Air way bill as defined in Incoterms 2010. - 2 negotiable and 2 non negotiable copies.
b. Signed invoice for the goods dispatched – 4 copies.
c. Certificate of Origin – 2 copies.
d. Packing List – 5 copies.
e. Test / Manufacturer's Certificate – 4 copies.
f. Fax intimation particulars regarding shipment sent to our insurer (Insurer details shall be indicated in the contract) – 2 copies.
g. Dispatch Advice issued by the Purchase – 4 copies.
h. Phitosanitary Certificate: In case of wooden packing only. (one original and 5 copies)

The goods shall be consigned to the following address-

To,
I/c Stores
Utkarsha Aluminium Dhatu Nigam Limited (UADNL),
(A Joint Venture of NALCO&MIDHANI)
Industrial Park, Bodduvari palem
Village: Chandrasekhara Puram

© 2022 MECON LIMITED. All rights reserved

Mandal: Kodavaluru
District : SPS Nellore
State : Andhra Pradesh, India,
PIN: 524316

6.0 INSURANCE

For Indigenous Suppliers: The supplier shall bear the transit insurance charges from their works to the Purchaser's site at Hyderabad.

For Import Suppliers: In case of C&F or FOB port of shipment delivery for imported equipment, the contractor shall arrange insurance for all equipment and materials to be supplied by him up to FOB port of shipment. Marine Insurance Coverage will be arranged by the Purchaser.

All subsequent insurance shall also be arranged by the supplier till completion of erection and commissioning including the storage of equipment & machinery at project site, with the beneficiary being indicated as UADNL.

If any Contract work, including supplies and services, perishes or becomes unserviceable from any cause whatsoever, the supplier shall, on demand by the Purchaser, make replacement and in such a way as to avoid disturbances in the general progress of the installation of the work. This shall apply irrespective of the question whether or not the risk has been passed to the Purchaser, or who shall be responsible for unserviceableness as aforesaid.

7.0 TAXES AND DUTIES

The supplier shall bear and pay all taxes, duties, levies and charges. The payment of duties, taxes, levies, etc. will be reimbursed (at actual) against documentary evidence to be produced by the supplier, subject to a ceiling indicated in price schedule of the Contract. In no case the reimbursement towards duties and taxes, etc. shall exceed the amount indicated in price bid format except on account of statutory variation in Taxes & Duties and / or imposition of new taxes and duties.

The supplier shall bear and pay all the liabilities in respect of non-observance of all legal formalities as per various statutory provisions.

GST shall be applicable on "Design charges", "Erection and commissioning charges", "Supervision of Erection and Commissioning"

Income tax (Withholding Tax) in India, if leviable and other taxes in relation thereto on any other account shall be borne and paid by the successful supplier. The successful supplier

© 2022 MECON LIMITED. All rights reserved

shall be liable to file tax returns with respective income tax authorities as required under the Indian Income Tax Act.

7.1 Goods & Service Tax

7.1.1 The amount of CGST, SGST and IGST quoted by the contractor (as per Price Tables) shall be interchangeable. Since input tax credit is not available to the employer, the total amount of GST reimbursed to the contractor shall not exceed the total of CGST, SGST and IGST quoted in the price tables.

7.1.2 If reimbursement of GST has been made to the Contractor on the expectation that ITC shall be available, and subsequently ITC is denied in GSTN for reasons not attributable to the Employer, then the amount of GST disallowed for ITC shall be recovered from any subsequent bill of the Contractor or by way of encashment of PBG, if required.

7.1.3 If ITC has been availed by the Employer but is subsequently reversed due to reasons not attributable to the Employer, then the amount of GST along with interest and/or any penalty paid or payable by the Employer on such reversal shall be recovered from the Contractor from any subsequent bill of the Contractor or by way of encashment of PBG, if required.

7.1.4 In case, no Input Tax Credit has been indicated against a GST element in any Price Table, reimbursement of GST shall be restricted to the amount indicated in the Price Table, unless otherwise admissible as per Clause 11.2 of GCC (Variation in Taxes and Duties).

7.1.5 TDS under GST laws, if applicable, shall be deducted from Contractor's bills at applicable rates and a certificate as per rules, for tax so deducted shall be issued to the Contractor

7.1.6 The Contractor shall be under obligation for charging correct rate of tax as prescribed under the respective GST tax laws. Further the Contractor shall avail and pass on benefits of all exemptions / concessions available under GST laws.

7.1.7 The Contractor shall be liable to get himself registered under GST with the respective tax authorities and to submit self-attested copy of such GST registration certificate(s) and the Contractor shall be responsible for procurement of goods / capital goods in its own registration (GSTIN) and also to issue its own Road Permit / E-way Bill, if applicable.

7.1.8 The Contractors shall maintain GST compliance at any given point of time.

7.1.9 The Contractor shall submit to the Employer GST compliant tax invoices / debit notes / revised tax invoices on the basis of which Employer will be able to claim Input Tax Credit as per GST laws.

7.1.10 Contractor shall attend to all issues on reconciliation of GST invoices, mismatch reports etc. to the satisfaction of the Employer

7.1.11 Address of the recipient under GST laws will be the address of "Project Manager" as mentioned in the Special Conditions of the Contract.

7.1.12 The contractor shall declare whether the services are being supplied fully or partly out of a Fixed Establishment as specified in the CGST Act. In case some or all the services are being supplied from a Fixed Establishment in India, the foreign contractor shall obtain registration

© 2022 MECON LIMITED. All rights reserved

under GST and shall raise GST invoices in INR corresponding to supplies being invoiced in foreign currency.

7.2 VARIATION IN TAXES & DUTIES

The price specified in Price Bid format (as per Clause 1.0)is based on the taxes, duties, levies etc. and charges prevailing on Base date (i.e. Seven (7) days before the last date of submission of Price Bid). If any rate of tax is increased or decreased, a new tax is introduced, an existing tax is abolished or statutory application of any tax occurs in the course of the performance of Contract,, which was or will be assessed on the supplier in connection with performance of the Contract, an adjustment of the Contract Price shall be made by addition to the Contract Price or deduction therefrom, as the case may be, within the Delivery period.

The adjustment in the Contract Price towards variation in the taxes shall be made by the Purchaser on production of the documentary evidences by the supplier .The Contract Price shall be adjusted towards variations in taxes in respect of only finished equipment supplied by the supplier to the Purchaser. No adjustment in the Contract price shall be made for variations in the taxes on raw-materials, parts, component / intermediate components, assemblies / sub-assemblies, etc.

7.3 RECOVERY OF INCOME TAX & GST TDS

a) Any Indian Income Tax which UADNL may be required to deduct by law/statute, shall be deducted at the source under Chapter XVII B and the same & shall be paid to the Income Tax Authorities on account of the CONTRACTOR. UADNL shall provide the CONTRACTOR a certificate for such deduction of Tax. The Contractor shall indicate their Permanent Account Number with the relevant Income Tax Authority to UADNL. Contractor shall maintain Books of Account and shall get the accounts audited as required under the relevant Act.

b) Applicable TDS under GST Act will be deducted as and when notified.

c) TDS under section 194Q and compliance of section 206AB of the Income Tax Act, 1961

As per section **section 194Q of the Income Tax Act,1961**, any person , being a buyer whose aggregate turnover during the preceding financial year exceeds Rs. 10 crores and is responsible for paying any sum to any resident (hereafter in this section referred to as the seller) for **purchase of any goods of the value or aggregate of such value exceeding fifty lakh rupees in any previous year**, shall, at the time of credit of such sum to the account of the seller or at the time of payment thereof by any mode, whichever is earlier, deduct an amount equal to 0.1 percent of such sum excluding GST exceeding fifty lakh rupees as income –tax.

Accordingly, UADNL will deduct TDS u/s 194Q from 01.07.2021 in respect of purchase of goods. Thus for this cases vendors are advised not to charge TCS under section 206C (1H) since UADNL will not reimburse the same.

© 2022 MECON LIMITED. All rights reserved

In addition to above, as per **section 206AB of the Income tax Act, 1961**, where tax is required to be deducted at source under the provisions of Chapter XVIIB other than section 192, 192A, 194B, 194BB, 194LBC or 194N, the provision for **TDS rate shall be,** where the **payee have not filed their Income Tax Return of the preceding two financial year <u>on or before the due date</u>** and **their aggregate TDS & TCS amounts are more than Rupees 50,000/-** in each of these two previous years then in such case **TDS rate shall be twice the <u>applicable rate of TDS</u>** or **<u>5%</u> whichever is higher**.

8.0 PERFORMANCE AND GUARANTEE, DEFECT LIABILITY

8.1 The Guarantee for performance shall cover individual items and systems including electrics for their ratings / outputs as well as for the integrated operation of the equipment, its auxiliaries and the ancillaries as specified.

The equipment shall be guaranteed for workmanship & material as specified for a minimum period of 12 months from the date of provisional acceptance based on successful commissioning and performance trial. The supplier at his own expense, upon written demand by the purchaser promptly repair or replace free to the purchaser at site any part comprising the equipment which is defective or not complying with the specification, within a period of Twelve (12) months from the date the equipment is put into commercial operation at site. Part, which is so repaired or replaced, shall be guaranteed for an additional year, as shall any portion of the work that might have been affected by such defect. The maximum guarantee period for repaired or replaced parts shall be 24 months from the date of completion of successful commissioning i.e. PAC.

8.2 **Performance Guarantee Test & Provisional Acceptance Certificate (PAC) :**

The supplier shall be responsible for carrying out the performance guarantee tests as per the Contract / technical specifications in the presence of Purchaser's representative on all plant, machinery and equipment supplied by him.

Minimum Acceptance Level of Performance Guarantee parameters as described in Sl. No. 15.0 of Technical Specification are tabulated below.

Sl.No	Description	Performance Parameter	Remarks
	Melting Furnace		
1	Capacity – Melting Furnace: Molten aluminum when bath level i.e., molten metal level is 150mm below the pouring spout level	Not less than 55t at metal temp. 750 ± 5 ^{0}C (on the instruments)	PAC shall be issued

© 2022 MECON LIMITED. All rights reserved

Sl.No	Description	Performance Parameter	Remarks
2	Melting Furnace: Melting rate	6.5 t/h with no heel for charge of 39.0t charge comprising of solid pieces each weighing not more than 20 kgs	PAC shall be issued
3	Melting Furnace : Skin Temperature	Side Wall above sill level: 85^{0}C maximum	PAC shall be issued
4	Melting Furnace : Skin Temperature	Side Wall below sill level, hearth & ramp: 110^{0}C maximum	PAC shall be issued
5	Melting Furnace : Skin Temperature	On Roof: 100^{0}C maximum	PAC shall be issued
6	Melting Furnace: Fuel Consumption	As per guaranteed fuel consumption as mentioned in submitted bid	PAC shall be issued
7	Melting Furnace : Noise level	Noise level shall be less than 85 db at a distance of 1m around the furnace at working level.	PAC shall be issued
	Holding Furnace		
8	Capacity – Holding Furnace: Molten aluminum when bath level i.e., molten metal level is 150mm below the pouring spout level	Not less than 50t at metal temp. 740 ± 5^{0}C (on the instruments)	PAC shall be issued
9	Holding Furnace : Skin Temperature	Side Wall above sill level: 85^{0}C maximum	PAC shall be issued
10	Holding Furnace : Skin Temperature	Side Wall below sill level, hearth & ramp: 110^{0}C maximum	PAC shall be issued
11	Holding Furnace : Skin Temperature	On Roof: 100^{0}C maximum	PAC shall be issued
12	Holding Furnace: Fuel Consumption	As per guaranteed fuel consumption as mentioned in submitted bid	PAC shall be issued
13	Holding Furnace : Noise level	Noise level shall be less than 85 db at a distance of 1m around the furnace at	PAC shall

© 2022 MECON LIMITED. All rights reserved

Sl.No	Description	Performance Parameter	Remarks
		working level.	be issued
	Vertical DC Casting Machine		
14	Vertical DC Casting Machine: Production rate for proposed product grades	50,000 Tones/ year (considering 330 days operation availability)	PAC shall be issued
15	Chemistry of Cast Product	Within the range as specified in Clause 15.03 of Performance Guarantee under Chemical Quality Indicator Table for different grades.	PAC shall be issued
	Physical Quality of Cast Product:		
16	Inclusions	Free from inclusions of size more than 10 micron. Not more than 2 nos. of inclusions of maximum size of 10 micron over a sample area of 1 square inch of the cast metal	PAC shall be issued
17	Hydrogen content	Maximum of 0.11 cc/100 gm of molten metal before casting	PAC shall be issued
18	Ultrasonic Class	Conform ultrasonic Class-AA as per AMS 2154/AMS 2630	PAC shall be issued
19	Porosity	Not more than 10 micron in size. Not more than 2 nos. of porosity maximum size 5 micron over a sample area of 1 square inch of the cast	PAC shall be issued
20	Segregation	Maximum 4%	PAC shall be issued
21	Pit Recovery	Minimum of 98%	PAC shall be issued

© 2022 MECON LIMITED. All rights reserved

Sl.No	Description	Performance Parameter	Remarks
22	Grain Size	250 microns max	PAC shall be issued
	Dimensional Tolerance:		
23	Slab	±2 mm for width, ±2 mm for thickness	PAC shall be issued
24	Billets	8” / 9”size: (+) 0 & (-) 1.0 mm 18” size: (+)0 & (-) 1.5mm	PAC shall be issued
		26” size: (+) 0 & (-) 2.0mm	PAC shall be issued
25	Straightness/ Billet bow:	1 mm per meter length of billet and max 3 mm in total length	PAC shall be issued
	Homogenising Furnace:		
26	Guaranteed Specific Energy Consumption for production of 50T cast products of aluminium hard alloys of grade 5XXX/ 6XXX charge + Wt. Of charge support 1) Electrical Energy (excluding fan motor power) (kWh/t) 2) Gas Consumption (kg/t)	As specified in the bid	PAC shall be issued
27	Heating Rate of charge (°C/hr)	As specified in the bid	PAC shall be issued
28	Furnace temperature uniformity	$\pm$ 5^{0}C	PAC shall be issued
29	Noise Level	Maximum permissible noise level shall be 85 dBa at 1 m distance.	PAC shall be issued
30	Cooling rate of charge (°C/hr)	As specified in the bid	PAC shall

© 2022 MECON LIMITED. All rights reserved

Sl.No	Description	Performance Parameter	Remarks
			be issued
31	Shell Skin Temp	As specified in the bid	PAC shall be issued
	Ultrasonic Inspection Equipment		
32	Detection sensitivity of longitudinal notch (along the main axis) (DxWxL)	**Slab Thickness**: 401 -500 mm 0.50 x0.1 x 25 mm	PAC shall be issued
		Slab Thickness: 501 -600 mm 0.60 x0.1 x 25 mm	PAC shall be issued
	Detection sensitivity of longitudinal notch (along the main axis) (Dia in inchxL)	**Billet:** 8”-9”, 18” & 26” To be indicated by Tenderer	PAC shall be issued
33	**Scalper Unit**	90,000 TPA Cast Products with two shift working for 330 days	PAC shall be issued
34	**Sawing Unit**	production rate for producing 90,000 TPA Cast Products with two shift working for 330 days	PAC shall be issued

If, for reasons attributable to the supplier, the performance guarantee parameters specified in Technical Specification are not met either in whole or in part, the supplier shall at its cost and expense make such changes, modifications and/ or additions to the Plant & machinery or any part thereof as may be necessary to meet performance guarantees parameters.

The supplier shall notify the Purchaser upon completion of the necessary changes, modifications and/ or additions and the supplier shall be allowed by the Purchaser to repeat the performance guarantee tests ONCE after first campaign of guarantee test and the supplier must establish the performance guarantee parameters during the Repeat test and ***all costs of this second campaign has to be borne by supplier***. If the above mentioned performance guarantees parameters are not achieved after repeat test, PAC shall not be issued.

© 2022 MECON LIMITED. All rights reserved

The date of completion of performance guarantee test shall be considered to be the date of PAC and the plant, machinery and equipment is ready for hand over to purchaser /for commencement of commercial production.

8.3 **Defect Liability Period and Final Acceptance Certificate (FAC):**

The supplier shall warrant that the facilities or any part thereof shall be free from defects in the design, engineering, materials and workmanship of the plant, machinery and equipment and structures supplied and of the work executed for 12 months from the date of issue of PAC.

After satisfactory completion of guarantee period (i.e. 12 months), Purchaser shall issue the Final Acceptance Certificate (FAC) to the supplier.

9.0 COMPLETENESS OF EQUIPMENT

The equipment shall be complete in all respects with all auxiliaries, mountings, fittings, fixtures and accessories etc. The supplier shall not be eligible for any extra payment in respect of such auxiliaries, mountings, fittings, fixtures and accessories etc. that may be required for the safe operation of the equipment. The supplier shall be responsible for the completeness of the equipment to ensure its specified performance as per technical specification.

10.0 PROGRESS INSPECTION, PRE DISPATCH INSPECTIONAND TRAINING

PROGRESS INSPECTION

The purchaser has the right to send its Engineers for progress inspection at any time during the delivery period. The Purchaser will bear the cost of travel, lodging and boarding.

PRE DISPATCH INSPECTION

Purchaser, if required, shall carry out Pre dispatch Inspection of goods as per Clause No. 20 of General Conditions of Contract. Supplier shall intimate the readiness of items and give sufficient time for Purchaser's personnel for the Pre dispatch Inspection. The procedure of Pre dispatch Inspection shall be mutually agreed.

TRAINING

Besides on job training on the equipment supplied at Purchaser's site, the supplier shall also provide training of 30 Man days to the Purchaser's personnel at suitable locations in the supplier/ sub Contractor's works / purchaser's works. The detail training program shall be mutually agreed. The training shall be free of cost; however the expenses for travel, boarding and lodging will be borne by the Purchaser.

11.0 QUALITY ASSURANCE PLAN

Supplier shall develop and implement a quality assurance plan before ordering any equipment in connection with the Work and will maintain the QAP for the duration of the

© 2022 MECON LIMITED. All rights reserved

Contract. Prior to placing equipment orders, supplier shall advise Purchaser of any proposed deviations from the QAP. A quality assurance manual for all critical or major equipment shall be submitted by supplier to Purchaser for a review. Submission of detailed QAP is mandatory for release of Advance payment as per Clause 5.1(ii).

12.0 LIQUIDATED DAMAGES FOR DELAY IN SUPPLIES AND EXECUTION [Ref No.41.18.7]

Liquidated damages shall be levied against supplier in case of unsatisfactory or delay in supplies and execution of the Contract beyond the date of PAC. LD shall be leviable @ 1% per week or part thereof subject to a maximum of 10% of Contract price excluding Taxes, Duties, levies, cess etc.

The Purchaser may, without prejudice to any other method of recovery, deduct the amount of such damages from any amounts in his hands due to the supplier. The payment or deduction of such damages shall not relieve the supplier from his obligations to complete the work or from any other of his obligations and liabilities under the Contract.

GST at applicable rates shall be charged on the Liquidated Damages as stated above and recovered from the Contractor, for which a tax invoice shall be issued by the Employer to the Contractor. Where the contract price is quoted in foreign currency, the amount of LD shall be converted into equivalent INR by applying the RBI reference rate on the date of invoice, and GST shall be charged on such equivalent value and recovered from the contractor along with the Liquidated Damages. A tax invoice in INR shall be issued to the Contractor.

NOTE:

1. If there is delay in supply of equipment but issue of PAC is within due date as per Contract, no LD shall be levied for delayed supply. Only, the date of issue of “Provisional Acceptance Certificate (PAC)” shall be considered for application of LD.

13.0 ORDER OF PRECEDENCE

In case of any inconsistency or repugnancy between any provision of “Technical Specification”, “Special Conditions of Contract”, “General Instructions to tenderer” and “General Conditions of Contract” on the same subject matter, the provisions of the “Technical Specification and Special Conditions of Contract” shall prevail over the “General Instructions to tenderer” and “General Instructions to tenderer” shall prevail over “General Conditions of Contract”.

© 2022 MECON LIMITED. All rights reserved

14.0 JURISDICTION

All questions, disputed or differences arising under or in connection with this Contract, other than those covered by Arbitration clause , shall be subject to the exclusive jurisdiction of the courts within the local limits of Hyderabad, Telangana, India.

15.0 LIABILITIES

The supplier shall be liable for damages caused by him according to its Insurance Coverage for General Liability, Product Liability and Environmental Liability. Evidence of these policies shall be given by the supplier.

Neither PARTY shall be liable to the other for any loss of profit, loss of use, loss of production, loss of Contracts or for any other indirect or consequential damages that may be suffered by the other.

16.0 PATENT INFRINGEMENT& COPYRIGHT

The supplier shall warrant that the Equipment at the time of its delivery is free from any third party's intellectual property right. If, despite this confirmation, a third party's claim comes up, the supplier will at his own choice and at his own cost procure for the Purchaser the right to use the equipment for the contractually agreed purpose or will replace the infringing part or component by a non infringing one.

17.0 INTEGRITY PACT

All bidders shall sign the Integrity pact along with submission of his acceptance of technical specifications and commercial terms & conditions. Non signing of Integrity pact shall disqualify the bidder.

18.0 DISCLAIMER

Eligible bidder to study carefully all documents, technical specifications and commercial conditions referred to herein before accepting the same. He shall fully satisfy himself of the appropriateness of the equipment and layout as indicated in the "Technical Specification" considering the conditions of working at and around the construction site. Further he shall take full responsibility for providing process technology & know-how, design, manufacturing, supply and safe & efficient operation and guarantee quality of the plant, machinery & equipment supplied and specified output. Claims and objections due to ignorance on the subject shall not be considered after submission of the Price bid.

19.0 OTHERS

19.1 The documents attached (General Instructions to tenderer, General conditions of contract) are general in nature and covers both indigenous as well as import supplies. However, the

© 2022 MECON LIMITED. All rights reserved

relevant portions shall be considered during execution of contract. All the bidders are requested to take a note of it.

19.2 Bidders shall submit the acceptance of "Technical specification" and "Special conditions of Contract".

19.3 No changes are allowed in the submitted Price Bid at a later date.

19.4 Surrounding Value for insurance purpose shall be NIL.

19.5 Commissioning of the package shall be as detailed in technical specification.

20.0 **Eligibility Criteria**: As detailed in Clause 4.0 of Notice Inviting Tender.

© 2022 MECON LIMITED. All rights reserved

SECTION-VI

GENERAL CONDITIONS OF CONTRACT

© 2022 MECON LIMITED. All rights reserved

TABLE OF CONTENTS

GENERAL CONDITIONS OF CONTRACT FOR PURCHASE OF PLANT, MACHINERY AND EQUIPMENT; SUPERVISORY SERVICE AND COMPLETE ERECTION SERVICES INCLUDING COMMISSIONING AND PERFORMANCE GUARANTEE

1.0 PURPOSE 06
2.0 DEFINITIONS 06
3.0 ENGINEER 10
4.0 ASSIGNING AND SUBCONTRACTING 11
5.0 SITE EXAMINATION 12
6.0 EXTENT AND SCOPE OF CONTRACT 13
7.0 CONFLICT AND INTERPRETATION OF DOCUMENTS 16
8.0 LANGUAGE 16
9.0 CORRESPONDENCE 16
10.0 SIGNING OF THE CONTRACT AGREEMENT 17
11.0 SECURITY DEPOSIT 17
12.0 GENERAL DIRECTION OF THE WORK 18
13.0 REPRESENTATION, WARRANTIES AND REPLACEMENTS 19
14.0 RESPONSIBILITY FOR PERFORMANCE OF CONTRACT 20
15.0 TYPE QUALITY OF MATERIALS AND WORKMANSHIP 21
16.0 COMMISSIONING AND OPERATIONAL SPARES, SPECIAL MAINTENANCE TOOLS AND CONSUMABLES 23
16.1 Commissioning Spares: 23
16.2 Maintenance Spares: 24
16.3 Special Maintenance Tools 24
16.4 Consumables 24
17.0 CONTRACT DRAWINGS, DOCUMENTS AND MANUALS 25
17.1 Scope 25
17.2 Drawing Format 26

© 2022 MECON LIMITED. All rights reserved

17.3 Numbering System 27
17.4 Working documents and drawings list with schedule 27
17.5 Foundation outline drawings and load data: 29
17.6 Equipment details and other drawings and documents 29
17.7 Bills of Materials: 30
17.8 Assembly and Erection Instructions and Drawings 30
17.9 Final Drawings 31
17.10 Spares List, Maintenance and Operational Manuals 33
17.11 Approval of drawings 33
17.12 Drawings/ Documents at delivery of Equipment 35
17.13 Drawings and Documents at Completion of Work: 35
18.0 CONTRACT PRICE 37
19.0 ASSIGNING OF CLAIMS AND INTEREST IN THE CONTRACT 37
20.0 INSPECTION AND TESTS DURING MANUFACTURE 37
21.0 TESTS ON COMPLETION 40
22.0 REJECTION OF DEFECTIVE PLANT, MATERIALS AND WORKMANSHIP 40
23.0 PACKING, PROTECTIVE PAINTING, MARKING AND SHIPPING 41
23.1 PACKING AND PROTECTIVE PAINTING: 41
23.2 MARKING: 43
23.3 SHIPPING 44
23.4. NOTICE TO PURCHASER AND ACCEPTANCE FOR SHIPMENT 45
23.0 STORAGE 46
25.0 PASSAGE OF RISK AND INSURANCE 46
25.1 Passage of Risks 46
25.2 Insurance 47
26.0 TIME FOR COMPLETION 49
27.0 DELIVERY TIME, DELAYS AND EXTENSION OF TIME 49

© 2022 MECON LIMITED. All rights reserved

28.0 PROGRESS REPORTS 50

29.0 DEPUTATION OF EXPERTS BY THE CONTRACTOR 51

30.0 SUPERVISION OF ERECTION, START-UP & COMMISSIONING AND COMPLETE INSTALLATION, ERECTION, START-UP AND PUTTING INTO COMMISSION 52

30.1 Supervision of Erection, Start-up & Commissioning: 52

31.0 PERFORMANCE GUARANTEE TESTS AND PROVISIONAL ACCEPTENCE 55

32.0 DEFECT LIABILITY PERIOD AND FINAL ACCEPTENCE 57

33.0 CHANGES IN THE WORK 58

34.0 OWNERSHIP OF DRAWINGS AND SPECIFICATIONS 59

35.0 FORCE MAJEURE 60

36.0 TEMPORARY SUSPENSION 61

36.1 Temporary Suspension during manufacture and Installation 61

37.0 PATENT INFRINGEMENT AND INDEMNITY 62

37.1 Patent Infringement 62

37.2 Indemnity 62

38.0 ENVIRONMENT 63

39.0 REMEDIES OF PURCHASER 64

40.0 ARBITRATION 64

41.0 ADDITIONAL CONDITIONS FOR COMPLETE ERECTION OF EQUIPMENT 65

41.1 Installation 66

41.2 Facility to Purchaser's Engineers 66

41.3 Programme and Particulars of work and Progress Reports 66

41.4 Contractor's Agent and Personnel 66

41.5 Working Hours 67

41.6 Supply of Installation Equipment, Materials and Labour 67

41.7 Delay in Obtaining Materials from Purchaser 67

41.8 Purchaser's Installation and Transportation Equipment 67

41.9 Return of Surplus Materials 68

41.10 Accident or Injury to Workmen 68

41.11 Compliance with Statutory and other Regulations 68

© 2022 MECON LIMITED. All rights reserved

41.12	Payment of Taxes for Foreign Personnel	69
41.13	Work Permits, Passports etc.	69
41.14	Travelling Expenses	69
41.15	Labour Rules	69
41.16	Time of Completion for Installation Work and Delays	73
41.17	Safety, Watching and Lighting	75
41.18	Security Regulations	76
41.19	Care of Work	76
41.20	Damage to Persons or Property	76
41.21	Extraordinary Traffic	76
41.22	Co-operation with other Contractors	76
41.23	Inspection of other Contractor's Works	77
41.24	Vesting of Constructional / Erection Plant etc.	77
41.25	Irremovability of Constructional/Installation, Materials etc.	77
41.26	Removal of Constructional/Installation Materials	77
41.27	Purchaser not liable for Loss or Injury to Construction/Erection Plant	77
41.28	Work in or around an Operating Plant	78
41.29	Site to be cleared on Completion of Work	78
41.30	Possession Prior to Completion	78
41.31	Withholding Payment	78
41.32	Termination of Contract for Equipment Erection	78
41.33	Waiver	81
41.34	Valuation on Determination	81
41.35	Payment after Termination	81
41.36	Jurisdiction	81
42.0	CONSTRUCTION OF CONTRACT	82
43.0	PENALTY FOR USE OF UNDUE INFLUENCE	82
44.0	GENERAL	82
45.0	LIMITATION OF LIABILITY	82
46.0	LIABILITY OF GOVERNMENT OF INDIA	83

© 2022 MECON LIMITED. All rights reserved

1.0 PURPOSE

1.1 This document shall accompany and be a part of the Contract entered into by M/s Utkarsha Aluminium Dhatu Nigam Limited (UADNL), Hyderabad for the provision of materials, plant, machinery, equipment and services required for the effective implementation of the Project.

1.2 The purpose of this document is to establish general conditions for the purchase of plant, machinery and equipment, erection, supervision, and complete installation and erection services which shall be binding upon all Contractors. The Contractor shall, not limited to the following, undertake design and engineering, and supply of plant, machinery and equipment, intermediate storage and handling of electrics and automation, erection, installation and automations, supervision of erection of facilities, testing, pre-commissioning, start up and commissioning and demonstration and establishment of performance guarantee parameters of the facilities. These general conditions are complementary to the Contract, Tender documents, Contract Drawings and Technical Specifications, etc. and anything appearing in one shall be construed as appearing in the other, unless specifically exempted.

2.0 DEFINITIONS

The following terms or expressions, as used in these "General Conditions of Contract" and in the appertaining invitation to tender and Tender Specification, shall have the meanings defined hereunder:

"**Approval of the Purchaser**" shall mean the written / stamped approval by the Purchaser or Engineer of a document, a drawing or other particulars or matters in relation to the Contract.

"Base date of the Contract" shall mean the date seven (7) days before last date of submission of price bid / updated price bid.

"**Bolt(s)**" shall include nuts and washers.

"**Cold Test**" means the no load test as per Technical Specification.

"**Contract**" shall mean and include the contract signed by and between the Purchaser and the Contractor, the invitation of tender, Contract/Technical Specifications, the instruments to tender, the tender, letter of intent, acceptance of tender, contract drawings, contract price and particulars hereinafter defined in respect of the supply and delivery of materials and for the performance of services within the scope of the Work of the entire Project or envisaged for the extension or expansion thereof and these general conditions and such special conditions that may be added and agreed to, and shall also include any agreement signed by and between the Purchaser and the Contractor in terms of Clause 10 hereof.

© 2022 MECON LIMITED. All rights reserved

"**Contract Drawings**" shall mean the designs, plans drawings, sketches and details which have been supplied by the Contractor for the execution of the Contract and approved by the Purchaser.

"**Commissioning**" means the successful operation of the plant, machinery and equipment under no load and load conditions and production of first specified quantity as per the Technical Specifications, including execution of the Performance Tests, as per the Technical Specification.

"**Contractor**" shall mean the Tenderer whose tender has been accepted by the Purchaser and shall include his/its/heirs, executors, administrators, legal representatives, successors and assign approved by the Purchaser.

"**Contract Price**" shall have the meaning as provided in Clause 18 of General Conditions of Contract.

"Contract Specifications"/ "**Technical Specification**" shall mean the specifications, detailed design statements of technical data, performance characteristics and all such particulars mentioned as such in the Contract.

"**Defect Liability Period**" means the period of validity of the guarantees given by the Contractor commencing from the date of issuance of the PAC during which the Contractor is responsible for the defects with respect to the Work as provided in Clause 32 hereof.

"**Delivery**" shall mean delivery by the dates/period specified in the Contract for supply of plant, machinery & equipment and completion of services, wherever applicable which are found acceptable by the Purchaser and not the submission of materials which are not to the required standard or which are not delivered by due dates, and in case of erection work, delivery shall mean the approval by the Purchaser of the said erection work, within the period prescribed for such completion.

"**Dimensions**" shall mean the extent of a line, area or volume. They are to be based on the metric system. i.e.
For length measurement, in km-

- 1 km = 1000 m
- 1 m = 100 cm
- 1 dcm = 10 cm
- 1 cm = 10 mm
- For surface measurement, in sq.m
- For volume measurement, in cu.m.

"**Effective Date**" shall mean the date of signing of the Contract.

"**Engineer**" as used herein shall mean M/s Utkarsha Aluminium Dhatu Nigam Limited (UADNL), Hyderabad having its registered office at P.O: Kanchanbagh, Telangana-500058, India, or such other engineer or engineers as are designated by the Purchaser.

© 2022 MECON LIMITED. All rights reserved

"**Final Acceptance of the Works**" shall mean the Final Acceptance Certificate (FAC) to be issued at the end of successful completion of the Defect Liability Period.

"**FOR Site**" shall mean delivered, duly packed, free of expense to Purchaser, on board a road transport vehicle, unloading at the Purchaser's stores at the plant Site or the erection/Installation Site.

"**FOB port of Shipment**" shall mean delivered, duly packed, free of expense to Purchaser, placed on board a transport vessel at the port of Shipment.

"**Guaranteed Performance**" or "**Specified Performance**" or "Performance Guarantee" means attaining the range of values specified in the Technical Specification, subject to other terms and conditions of the Contract.

"**Hot Test**" means the production of the first specified quantity as provided in the Technical Specification.

"**Inspector**" shall mean any person or agency nominated by or on behalf of the Purchaser to inspect supplies, materials, plant, machinery and equipment or work under the Contract.

"**Installation**" or '**Erection**" shall mean the putting up under the particular contract of structures and/or installation and erection on turnkey basis of plant, machinery and equipment with all accessories supplied and will include supervision services for installation, erection, start up and commissioning and any service which the Contractor is required to perform for the due fulfilment of his contract at the Site with his own and/or other staff or labour made available to him and with the aid of his own and/or other staff, labour and equipment and auxiliary materials placed at his disposal.

"**Instructions to Tender**" shall mean and/or include the enquiry for the supply, delivery, installation including foundations and civil engineering work where necessary, and starting up of the plant or plants, or performance of service or services in connection with the Project or for the planned extension or expansion thereof.

"**Purchaser**" as used herein shall mean M/s Utkarsha Aluminium Dhatu Nigam Limited (UADNL), Hyderabad , incorporated under the Companies Act, 1956 / 2013 , and having its registered office at P.O.: Kanchanbagh, Telangana-500058, India, and shall include its successors and assigns in office.

"**Project**" shall mean the project or scheme in respect of the Purchaser's new venture and/or facilities including erection/installation, training and all related and incidental services in relation thereto.

© 2022 MECON LIMITED. All rights reserved

"**Provisional Acceptance of the Works**" or "**PAC**" shall mean the Provisional Acceptance Certificate (PAC) to be issued after the successful completion of the PG test.

"**Performance Test**" or "**PG Test**" means such tests to be carried out as per Technical Specification and Clause 31 hereof, to demonstrate the achievement of the Guaranteed Performance before the Provisional Acceptance Certificate is issued.

"**Schedule/ Work Schedule**" shall mean the accepted time schedules between the Contractor and the Purchaser forming a part of the Contract and shall indicate the Delivery and the major activities in the completion of the Work.

"**Site**" means the land and other places on, under, in or through which the plant, machinery and equipment supplied by the Contractor are to be erected, installed and commissioned and/or services under the Contract are to be executed or carried out, and any other lands or places which are, or have been provided by the Purchaser.

"**Sub-Contractor(s)**" shall mean a person, firm or corporation who directly or indirectly supplies services or materials to a Contractor or to Purchaser on behalf of the Contractor and to whom the execution of any part of the Project including preparation of any design or supply of any plant, machinery and equipment is sub contracted directly or indirectly by the Contractor and includes its successors or permitted assignees.

"**Tenderer**" shall mean the person, firm or corporation submitting a tender against the invitation to tender and shall include his/its heirs, executors, administrators, legal representatives, successors and permitted assign.

"**Tender Specification**" shall mean the design, data drawings, schedules, broad equipment, characteristics and other technical details furnished with the Invitation to Tender for the purpose of submitting the offer by the Tenderer.

"**Time**" shall be reckoned by months, days and hours, the period of a month being equivalent to the calendar month according to the Gregorian calendar.

"**Test(s)**" shall include all test or tests made, without releasing the Contractor of his liability, as may be considered necessary by the Purchaser or its duly authorized representative, in order to ascertain the quality and efficiency of the contract Work or parts thereof and performance of the plant, machinery and equipment and material tests in particular.

"**Plant, Machinery, Equipment, Facility, Materials, or Stores** " or "**Work**" shall mean all or any part of the materials, equipment, drawings, supervision of erection, commissioning, Installation and start up and other services required for the design, supply and execution of the work which is either specially required by the Contractor or is required in connection with such services and such materials or which is within the scope of the Contract and not specifically excluded by the contract from the materials and services which the Contractor is obligated to furnish under the Contract or implied from Tender Specifications, drawings and schedules thereto

© 2022 MECON LIMITED. All rights reserved

annexed or incidental thereto.

"**Weight**" shall mean the calculation of a load. It shall be stated in metric system using Grams and Kilograms, Specifically the weight unit "**Ton**" shall mean 'metric ton' equal to 1,000 kilograms.

Words importing persons shall include firms, companies, corporations, associations or body of individuals whether incorporated, registered. Words importing masculine gender or singular number shall also include the feminine gender and plural number and vice versa where the context so requires or permits.

Tender Drawings-The term "**Tender Drawings**" shall mean such drawings, plans, sketches and details as are issued together with the Purchaser's tender specification for the purpose of preparing tenders.

3.0 ENGINEER

3.1 Powers of Engineer:

To ensure the proper execution of the Contract, the Engineer reserves the right of:

(a) supervision and direction of the Contract,

(b) directing or amending the sequence of deliveries of plant, machinery and equipment and other services,

(c) directing the application of Contractor's labour and machinery forces to any portion of the work as required,

(d) ordering the increase or decrease of the size of the labour and machinery and to resolve issues which arise in the execution of the Contract,

(e) rejecting any or all work and materials, plant, machinery and equipment which do not conform to the Contract,

(f) stopping the work of execution whenever such stoppage may be necessary.

3.2 Duties of Engineer

(a) to inspect the plant, machinery, equipment and materials,

(b) to follow up and monitor proper delivery of the plant, machinery, equipment and

© 2022 MECON LIMITED. All rights reserved

materials to Site as per the specifications and drawings and as per the sequence required,

(c) to watch and supervise the Works,

(d) to inspect and test any materials to be used or workmanship employed in connection with the Works.

Any instructions or approvals given by Engineer to the Contractor in connection with the Contract shall bind the Contractor.

3.2.1 The Engineer shall have no authority to relieve the Contractor of any of his duties or obligations under the Contract except as expressly provided hereunder or elsewhere in the Contract, to order any work involving delay, any extra payment by the Purchaser and any variation in the Works.

3.2.2 Failure of the Engineer to reject any plant, equipment, materials, workmanship etc., or to disapprove any work or materials shall not prejudice the Purchaser to reject such plant, machinery and equipment, materials, workmanship etc., or to disapprove such work or materials and to order re-supply of such plant, machinery and equipment and materials or to pull down, remove or break up such disapproved work at the cost of the Contractor, provided the Contractor fails to comply with the direction and requirement of the Purchaser therefor. The decision, opinion, certificates or valuation of the Engineer/Purchaser in respect of any matter under this Clause shall be final, binding and conclusive.

3.2.3 If the Contractor is dissatisfied by reason of any decision, opinion, direction, certificate or valuation of the Engineer, he shall be entitled to refer the matters to the Purchaser who shall thereupon confirm, reverse or vary such matters based on its sole discretion.

4.0 ASSIGNING AND SUBCONTRACTING

4.1 Assigning: The Contractor shall not transfer or assign the Contract or any part thereof or any benefit or interest therein or there under without the written consent of the Purchaser. In the event of the Contractor contravening this condition, the Purchaser shall be entitled to place the Contract elsewhere on the Contractor's account and at the Contractor's risk and cost and that the Contractor shall be liable for any loss or damage which the Purchaser may sustain in consequence or arising out of such replacing of contract. This shall not relieve the Contractor of any responsibility under this Contract.

4.2 Sub-contracting: The Contractor shall not sub-contract the whole or any part of the Works without the prior Approval of the Purchaser except as stipulated otherwise in the Contract and/or

© 2022 MECON LIMITED. All rights reserved

for purchases from approved vendor's list. The list of approved vendors forming a part of the Contract Specification specifies major items of supply or services and indicates name of approved vendors against each such items. Such approval if given shall not establish any contractual relationship between the Sub-Contractor and the Purchaser and shall not relieve the Contractor of any responsibility, liability or obligation under the Contract and the Contractor shall be solely responsible for the acts, defaults and neglects of any sub-contractor or his agents, servants or workmen. In the event of the Contractor contravening this condition, the Purchaser shall be entitled to place the Contract elsewhere on the Contractor's account and at his risk and cost and then the Contractor shall be liable for any loss or damage which the Purchaser may sustain in consequence or arising out of such replacing of the Contract. This shall not relieve the Contractor of any responsibility under this Contract. The Contractor may from time to time propose any addition to approved vendors list to the Purchaser for its approval. The Contractor shall submit any such addition of vendors to the Purchaser along with sufficient details of their capability, past records, contact details etc. The Purchaser may approve/ comment on the list of such vendors.

4.3 Notwithstanding the approval given by the Purchaser for sub-contract, it shall continue to be obligatory on the part of the Contractor to provide to the Purchaser all drawings, specifications, technical data, detailed design, performance characteristics etc. from his Sub-Contractors.

4.4 In the event of the Purchaser agreeing for the sub-suppliers/Sub-Contractors proposed by the Contractor, it shall be obligatory on the part of the Contractor to deploy their technical experts in the works of the sub-suppliers/Sub-Contractors to direct and exercise control over quality of plant, equipment, materials and workmanship during the manufacture. However, the same shall not relieve the Contractor of any of his obligations, duties or responsibilities under the Contract.

4.5 The Purchaser shall have the right to specify the brand name/s of the standard bought out items in the Contract and the Contractor shall procure such items from those branded name/s. This shall, however, not relieve the Contractor of his other obligations under the Contract.

5.0 SITE EXAMINATION

5.1 The Contractor shall have visited, inspected and examined the Site of the Work and its surroundings and ascertained there from all conditions and information pertaining to the Work and shall satisfy itself prior to the preparation and submitting of the tender all such information and conditions including but not limited to the various facilities available at the Site for the receipt, storage and custody of the materials, as to the nature of the ground and sub soils, the form and the nature of the Site, the quantities and the nature of the Work and facilities necessary for transportation, erection, installation, testing and commissioning of the works and the means of access to the Site and in general shall obtain all necessary information as to the working conditions, risk, contingencies and other circumstances which may influence or affect the tender and performance of the Work. No claim by the Contractor shall be permitted or admissible arising

© 2022 MECON LIMITED. All rights reserved

from non-fulfilment of the above.

5.2 The Contractor shall also be deemed to have ascertained all special local and national standards, regulations, customs etc, which may affect his design, schedule, choice of supervisory personnel, etc. prior to the preparation of his tender. Typical of such information may include but not limited to the average Indian heights-of-eye (for design of control desks and pulpits) special restrictions or considerations, details of facilities to be expended, modified, or duplicated details of materials available in India etc. No claims for extra payment shall be permitted or admissible on these accounts.

6.0 EXTENT AND SCOPE OF CONTRACT

6.1 Extent of Contract: The Work comprises of providing process technology & know-how along with design and engineering, manufacture and supply of plant, machinery and equipment, storage, erection work (including associated civil & structural works as specified), testing, start-up and commissioning, demonstrating and establishing performance guarantee parameters of the work, including the facilities, materials and stores and guarantees thereof and the provision of construction facilities including but not limited to water, power, utilities, yard lighting, transport, handling and shifting, labour, materials, tools and tackles and all the temporary works required for successful completion of the Work. The Contractor shall be responsible for proper housekeeping and area cleaning of the Work to ensure safe working practices as well as deployment of watch and ward at his Work-Site.

6.2 The Contractor shall carry out and complete the Contract in every respect as per the directions of and to the satisfaction of the Purchaser/Engineer in accordance with the Contract. Further, during the course of the execution, the Purchaser/Engineer from time to time shall discuss and issue necessary instructions to the Contractor. The same shall include the following:

6.2.1 Revisions and modifications in the order of the delivery of the plant, machinery and equipment, materials, changes in the place of inspection or additions and modifications of the tests to be conducted.

6.2.2 Changes in the number of copies of the drawings to be submitted.

6.2.3 Any discrepancy in the drawings or between the schedule or quantities and/or drawings and/or specification.

6.2.4 The removal from the Site of any materials brought thereon by the Contractor and the substitution of any other materials therefor.

6.2.5 Pull down, removal or break-up and/or re-execution of any Works executed by the

© 2022 MECON LIMITED. All rights reserved

Contractor which are not in accordance to the Contract.

6.2.6 The dismissal from the Works of any person employed thereupon.

6.2.7 The opening up for inspection any Work covered up.

6.2.8 The rectifying and making good of any defects.

6.2.9 The inspection and carrying out of tests of materials, plant, machinery and equipment and finished Work on Site.

6.2.10 Deducting and recovering any amounts, in respect of defective plant, materials, labour and finished work for which payments had been made, from any amounts due to the Contractor.

6.3 The Contractor shall forthwith comply with and duly execute any work comprising such Engineers' instructions, provided always that verbal directions and explanations given to the Contractor or his agents/representatives upon the work by the Engineer shall, if involving variation, be confirmed in writing by the Contractor within ten (10) working days and if not dissented by the Engineer in writing within a period of ten (10) working days from the date of receipt of such confirmation in writing, such instructions shall be deemed to be the Engineer's instructions within the scope of the Contract.

6.4 If work is transferred from the jurisdiction of the Purchaser to any successor, while the Contract is in subsistence, the Contract shall be binding on the Contractor and the successor in the same manner and take effect in all respects as if the Contractor and the successor were parties thereto from the inception and then corresponding office of the competent authority of the successor will exercise the same powers and enjoy the same authority as conferred to the Purchaser under the original Contract entered into and the engineer so appointed shall have the same powers as envisaged in the Contract.

6.5 **Contractors Responsibilities**:

The Contractor shall carryout scope of facilities as specified in the scope of Work hereof including process technology & know-how supply, design and engineering; civil engineering work, if agreed between the parties; dismantling, if any, of existing building, structures and equipment; modification / diversion, if any, of utility / services; fabrication and supply of steel structures; manufacture (including associated purchases and / or sub-contracting as per the terms and conditions of the Contract) and supply of plant, machinery and equipment and refractories; inland transportation; intermediate storage; insurance as agreed herein and handling; erection work; testing;

© 2022 MECON LIMITED. All rights reserved

pre-commissioning; start up and commissioning and demonstration and establishment of performance guarantee parameters of the plant, machinery and equipment with due care and diligence in accordance with the Contract.

(i) The Contractor shall be deemed to have entered into this Contract on the basis of a proper examination of the data relating to the facilities (including any data as to boring tests) provided by the Purchaser, and on the basis of information that the Contractor could have obtained from a visual inspection of the Site and of other data readily available in relation thereto prior to bid submission. The Contractor acknowledges that any failure to acquaint itself with all such data and informed shall not relieve its responsibility for properly estimating the difficulty or cost of successfully performing the facilities.

The Contractor shall satisfy himself regarding the accessibility to Site and existing roads, feasibility of taking materials / equipment to Site and availability of Labour and local conditions.

(ii) The Contractor shall acquire permits, approvals and / or licenses that are necessary for the performance of the Contract. The necessary statutory fees for such permits, approvals and / or licenses are included in the Contract Price.

(iii) The Contractor shall comply with Indian laws that may be applicable and that may come into force during currency of the Contract that binds upon the Contractor. The Contractor shall indemnify and hold harmless the Purchaser from and against any and all liabilities, damages, claims, fines, penalties and expenses of whatever nature arising or resulting from the violation of such laws by the contractor or its personnel, including the Sub-Contractors and their personnel.

6.6 The Contract shall be governed by the law for the time being in force in the Republic of India.

6.7 In case of demise or dissolution or bankruptcy or insolvency of the Contractor or if the Contractor causes or suffers any receiver to be appointed to his business or any assets thereof or compound with his creditors, or being a corporation commence to be wound up, not being a member's voluntary winding up for the purpose of amalgamation or reconstruction, or carry on its business under a receiver for the benefits of its creditors or any of them, the Purchaser shall be at liberty:

(i) to terminate the Contract forthwith upon coming to know of the happening of any such event as aforesaid by notice in writing to the Contractor or to the receiver or liquidator or to any person in whom the Contract may become vested.
Or

(ii) to give such receiver, liquidator or other person the option of carrying out the Contract subject to his providing a guarantee up to an amount to be agreed for the due and faithful

© 2022 MECON LIMITED. All rights reserved

performance of the Contract.

7.0 CONFLICT AND INTERPRETATION OF DOCUMENTS

7.1 In case conflicting statements or directive should occur among the contract documents, it shall be the responsibility of the Contractor to notify the Purchaser, with a copy sent concurrently to the Engineer, Immediately in writing and obtain instructions from the Purchaser to eliminate the conflict.

7.2 The Contractor shall notify the Purchaser, with a copy sent concurrently to the Engineer promptly of any discrepancies, omissions or doubts it may have, regarding drawings, specification or other documents. Noted or calculated dimensions shall always be followed. Drawings shall not be scaled without the authorization of the Purchaser or Engineer. Such discrepancies, omissions or doubts shall be eliminated upon instructions from the Purchaser based on discussions between the parties.

8.0 LANGUAGE

The Contract, all correspondence among the Purchaser, the Engineer and the Contractor and title and written notations on drawings shall be in the English language.

9.0 CORRESPONDENCE

9.1 All correspondence by the Contractor pertaining to financial, commercial and technical matters and as may be specifically requested by the Purchaser and/or the Engineer shall be addressed to the Purchaser. Copies of all correspondence pertaining to technical matters shall be sent concurrently to the Engineer. Similarly all correspondence by the Purchaser to the Contractor shall made to the following address

9.2 The Contractor designates the following foreign address:[●]

9.3 The Contractor designates the following address in India: [●]

9.4 The Purchaser designates the following address:
M/s Utkarsha Aluminium Dhatu Nigam Limited
(UADNL),
P.O. Kanchanbagh
Hyderabad;
Telangana-500058, India

9.5 The Engineer designates the following address:
M/s Utkarsha Aluminium Dhatu Nigam Limited
P.O. Kanchanbagh ,

© 2022 MECON LIMITED. All rights reserved

Hyderabad,
Telangana-500058, India

9.6 The Inspector designates the following address:
M/s Utkarsha Aluminium Dhatu Nigam Limited
P.O. Kanchanbagh ,
Hyderabad,
Telangana-500058, India

10.0 SIGNING OF THE CONTRACT

On the tender being accepted by the Purchaser, a Contract will be signed and executed by the Purchaser and the successful tenderer. All costs, charges and expenses of and incidental to the execution of the said agreement shall, in so far as they are incurred in India, be borne by the Purchaser, and those that are incurred in the Contractor's country shall be borne by the Contractor, provided however, if both parties incur expenses in India, they shall be borne equally between the parties.

11.0 SECURITY DEPOSIT

11.1 The Contractor shall be required to deposit, within 30 (thirty) days of signing of Contract, Security Deposit of 3% of the Contract Price in favour of the Purchaser in one of the following forms:

a) Bank guarantee issued from State Bank of India or any Indian Scheduled bank payable at India.
b) Bank guarantee issued by any foreign bank and payable at any Indian Scheduled Bank in India.
c) Demand draft of any scheduled Indian Bank.

The Bank guarantee from an Indian Scheduled Bank shall be countersigned by the State Bank of India whereby the State bank of India will undertake full responsibility to indemnify the Purchaser in case of default. This security deposit shall be in relation to the scope of work till the completion of installation and commissioning of the plant, machinery and equipment and issuance of PAC upon successful completion of the PG Test. The bank guarantee for the security deposit shall be returned to the Contractor as soon as the PG Test is successfully completed to the satisfaction of the Purchaser.

The Contractor shall be required to deposit on the date of the issuance of PAC, security deposit of 10% of the Contract Price for the guarantee period till the issuance of the FAC i.e. successful completion of the Defect Liability Period, in favour of the Purchaser in one of the following

© 2022 MECON LIMITED. All rights reserved

forms:

a) Bank guarantee issued from State Bank of India or any Indian Scheduled bank payable at India.
b) Bank guarantee issued by any foreign bank and payable at any Indian Scheduled Bank in India.
c) Demand draft of any scheduled Bank.

The Bank guarantee from an Indian Scheduled Bank shall be countersigned by the State Bank of India whereby the State bank of India will undertake full responsibility to indemnify the Purchaser in case of default. The Bank Guarantee shall be returned to the Contractor as soon as the FAC is issued or, on the expiry of 12 (twelve) months from the date of issuance of PAC whichever is later.

11.2 The security deposit shall be for the due and faithful performance of the Contract and shall have to remain valid and binding notwithstanding such variations, alterations or extensions of time as may be made, given, conceded or agreed to between the Contractor and the Purchaser under these general conditions or otherwise.

11.3 The security deposit furnished by the Contractor will be subject to the terms and conditions of the Contract finally concluded between the parties and the Purchaser will not be liable for payment of any interest on the security deposit.

11.4 Should the extent or object of the Contract be altered during the execution of the Contract in such a way as to affect an increase or reduction of the Contract Price by more than 10% (ten per cent), then the security deposit shall be increased or reduced accordingly. The provisions of Clause11.1 to Clause 11.3 above shall apply in such cases.

11.5 If the Contractor is a Consortium then the Bank Guarantee will be furnished by the lead member of the Consortium for the Contract Price and for the entire scope of Work and services to be performed. In the event of failure of any one consortium member, the Bank Guarantee given by the lead consortium member will be liable to be encashed. This provision is to enforce the joint and several liability agreed by the members of the Consortium.

12.0 GENERAL DIRECTION OF THE WORK

12.1 The Contractor shall obtain instructions for carrying out the Work pertaining to his Contract from the Purchaser or its authorized representative without causing any disruption in the performance of the Work.

12.2 The Contractor shall be under obligation to comply with written instructions given by the Purchaser or its authorized representative. In the event that the Contractor should consider that

© 2022 MECON LIMITED. All rights reserved

such an instruction is harmful to the Contractor's interests, he may object to the same in writing and the same shall be decided by the Purchaser or its authorized representative at its sole discretion; if within ten (10) working days from the receipt of the instruction the Contractor has not objected to it, he shall forfeit his right to do so at a later date.

12.3 The Contractor shall take care of the progress of the work through a qualified representative. Any instructions given to such representative shall be considered as having been issued directly to the Contractor.

13.0 REPRESENTATION, WARRANTIES AND REPLACEMENTS

13.1 The Contractor represents and warrants to the Purchaser that:

13.1.1 The Process Technology & design of all plant, machinery and equipment will be proven and of the latest and best type as developed by recent experience and that the plant, machinery and equipment shall be capable, under normal use, operation and maintenance, of accomplishing the purposes for which it is supplied as per Contract Specifications.

13.1.2 The plant, machinery and equipment will comply with the Contract Specifications, drawings and other description furnished thereof by the Purchaser or the Contractor as the case may be as per the Contract.

13.1.3 The materials, workmanship, fabrication of the plant, machinery and equipment will be of high quality in all details as per Contract Specifications and conforming to the latest relevant standards and as prevailing on the Base Date of the Contract where the same has not been specified.

13.1.4 The plant, machinery and equipment supplied by the Contractor when erected, installed and commissioned at Site will constitute a complete and efficient functioning unit, capable of operation at the rate and capacity set forth, if any, in the Contract Specification.

13.1.5 The plant, including any extras, will in all respects comply with the specification therefor, and the specifications for any such extras, and the representations and warranties set forth herein.

13.1.6 The Contractor at the time of delivery to the Purchaser of the plant, machinery and equipment will own the same free and clear of all liens and encumbrances.

13.2 The Contractor shall, at his own expense, upon written demand by the Purchaser promptly repair or replace free to the Purchaser at Site any part comprising the plant machinery and equipment supplied by the Contractor, within a period of twelve (12) months from the date of the Provisional

© 2022 MECON LIMITED. All rights reserved

Acceptance Certificate issued upon successful completion of the PG Test:

13.2.1 Which may not comply with the specification thereof and the representations and warranties set forth herein; or

13.2.2 Which may be of defective or incorrect design; or

13.2.3 Which under normal and proper use and maintenance as per operation & maintenance manual proves deficient in performance or defective in workmanship or materials.

13.3 If the Contractor fails to so repair or replace the plant, machinery and equipment within reasonable time as may be determined by the Purchaser, the Purchaser may repair or replace the same at the Contractor's risk and expense without prejudice to any other rights which the Purchaser may have against the Contractor. Prior to taking remedial action, the Purchaser will give fifteen (15) days' notice to the Contractor to review the situation and advise steps to be taken. Failure to reply in fifteen (15) days after the receipt of notice by Contractor shall constitute authority for the Purchaser to proceed with the repairs or replacements.

13.4 All repairs and replacements carried out by the Contractor to rectify defects shall be made in compliance with the Contract Specification and shall be made to the satisfaction of the Purchaser. The part of the plant, machinery and equipment which is so repaired or replaced shall be guaranteed for an additional year as shall any portion of the Work which might have been affected by such defect. The maximum guarantee for repaired or replaced part shall be twenty four (24) months from the date of commissioning.

The guarantee shall not cover:

- fast wearing parts & consumables, where the normal life expectancy is less than the guarantee period.
- Modifications / alterations performed by the Purchaser during guarantee period without the consent of the Contractor. However, the Purchaser is allowed to take action in case of exigency with intimation to the Contractor.

14.0 RESPONSIBILITY FOR PERFORMANCE OF CONTRACT

14.1 **General**: The Contractor is to be entirely responsible for the due performance of the Contract in all respects according to the intent and meaning of the drawings, specifications and all other documents referred herein. Any approval which the Purchaser/Inspector/Purchaser's authorised representative may have given in respect of the stores, materials or other particulars and the work or the workmanship involved in the Contract (whether with or without test carried out by the

© 2022 MECON LIMITED. All rights reserved

Contractor or the Purchaser) shall not bind the Purchaser, and notwithstanding any approval or acceptance given by the Purchaser/Inspector/Purchaser's authorized representative, it shall be lawful for the Purchaser to reject the materials on or after arrival at Site, if it is found that the materials supplied, erection, supervision/erection work carried out by the Contractor are not in conformity with the terms and conditions of the Contract in all respects.

14.2 **Contract**: The Contractor shall commence the Work as stipulated in the Contract and in default thereof, the Earnest Money Deposit and/or the Security Deposit amount furnished by the Contractor shall be forfeited and the acceptance of the Tender shall be considered as withdrawn at the cost of the Contractor. Moreover, the Contract will be terminated and the Contractor will be liable for debarring from participation in the Purchaser's tenders for a period of 2 (two) years.

14.3 **Responsibility for Completeness**: Any materials plant, machinery and equipment and services which may not be specifically mentioned in the Contract Specifications or drawings but which are necessary and essential for carrying out the Contract works under the Contract as detailed in the Contract Specification for achieving performance guarantees in accordance with the Contract Specification are to be provided for and rendered by the Contractor without extra charge, and the plant, machinery and equipment must be complete in all details, to ensure the specified and guaranteed performance.

14.4 **Co-operation with other Contractor**: The Contractor shall co-operate with the Purchaser's other contractors at all stage of the Work and exchange all relevant and necessary technical information with the Purchaser in relation to the effective and successful implementation of the Contract to avoid unnecessary duplication of Work and to achieve coordinated work during erection, Installation and commissioning. No remuneration shall be claimed from the Purchaser for such technical co-operation. If any of the Contractor's work depends for proper execution or results upon the works of any other Purchaser's contractor, the Contractor shall inspect and inform the Purchaser of any defects found in such works that render it unsuitable for such proper execution or results, for the Purchaser to take remedial action.

14.5 Neither party shall be liable to the other for any loss arising out of any other indirect or consequential damages that may be suffered by the other.

15.0 TYPE QUALITY OF MATERIALS AND WORKMANSHIP

15.1 The Contractor shall be deemed to have carefully examined and to have knowledge of the general and other conditions, specifications, schedules, drawings, etc. forming part of the Contract, and also to have satisfied himself as to the nature and character of the work to be executed and, where necessary, of the Site conditions and other relevant matters and details. Any information thus had or otherwise obtained from the Purchaser shall not in any way relieve the Contractor from his responsibility for civil works, if agreed to be undertaken herein, supplying the plant, machinery and equipment and executing the work in terms of the Contract, including all details and

© 2022 MECON LIMITED. All rights reserved

incidental works and supply of all accessories or apparatus not specifically mentioned in the Contract but necessary for ensuring complete Installation and efficient working of the plant and equipment as per the Contract Specification. If he shall have any doubt as to the meaning of any portion of the Contract, he shall, before signing it set forth the particulars thereof and submit them to the Purchaser in writing in order that such doubt may be removed.

15.2 The contract work shall be as specified in the Contract Specification and of the best quality and workmanship according to the latest engineering practice at the time of the award of the Contract and shall be manufactured from materials of the best quality or highest class for their purpose. They shall be designed, manufactured, supplied and, if required, erected and maintained until their acceptance in India, in accordance with their requirements in India.

15.3 The Contractor shall be deemed to be aware of the fact that the supplies and services under the Contract are required for the Project and he shall, therefore, make provisions for his supplies and/or services to be so adjusted that they fit in to the Purchaser's general scheme in respect of the Project or expansion thereof and will not interfere with the interaction of the combined operation. The Contractor shall make necessary references and inquiries at appropriate stages.

15.4 The Contractor shall procure and/or fabricate all materials and equipment, and shall undertake the erection and Installation as provided in the Contract, in accordance with all requirements of Central and State enactments, rules and regulations governing such work as prevailing on the Base Date of the Contract and as may be amended from time to time and codes and standards listed in the contract documents and normal considerations of quality and good workmanship. This shall not be construed as relieving the Contractor from complying with any requirements of the drawings and contract specifications which may be more rigid than, but not contrary to, the above mentioned rules nor from providing such constructions as may be required by the above mentioned rules and regulations, even though it may not be shown on the drawings or in the specifications. In case of variance of the drawings and/or contract specifications from the laws, ordinances, rules and regulations governing the work, the Contractor shall immediately notify the Purchaser. It is the sole responsibility of the Contractor, however to determine that such variance exists. Additional costs, if any, due to such revision and / or variation in the rules, regulations and enactment of Governmental Authorities governing such supplies, codes and standard from that existing arising after the Base Date of the Contract shall be mutually discussed and agreed upon. Wherever required by regulations, the Contractor shall also obtain relevant statutory authorities approval (e.g. the Boiler Inspector's, Factory Inspector, etc.) for the plant, machinery and equipment supplied by the Contractor. The Purchaser to the extent possible shall provide the reasonable support to the Contractor for obtaining such approval.

15.5 Codes and standards referred to in the Contract documents shall be followed. Necessary codes and standards of suitable Indian or International standard can be followed, with the prior Approval of the Purchaser, provided materials and equipment according to these standards are

© 2022 MECON LIMITED. All rights reserved

equal to, or better than the corresponding standards specified in the Contract. In the absence of codes & standards of any item in the contract, codes and standards of suitable Indian or International standard can be followed.

15.6 In general, the materials and workmanship shall meet the requirements of standards and specifications in the contract documents. In any case materials shall be of best grade and quality and most suitable for the purpose intended, in accordance with modern practice and as per the Contract Specification. All materials shall be new. Substitutions for specified materials or variations from designed processes or methods of fabrication will be permitted only if approved by the Purchaser. Such approval may be granted only if a compelling reason exists for making a substitution. Before any defect in materials or workmanship is repaired, the Contractor shall outline the procedure proposed for rectification of the defect and obtain Approval of the Purchaser.

15.7 All meters, gauges, recorders and other types of indicating, integrating or recording devices shall be calibrated in the metric system and degrees Celsius. Where Vernier attachments are related to the English system, gearing must be changed to produce results on a true decimal (Metric) basis. Functional and instruction plates shall be in the English language.

15.8 Brand name mentioned in the Contract documents is for the purpose of establishing the type and quality of products to be used. Competitive products of equal or better quality and function may be substituted, if approved by the Purchaser. All such products and equipments shall be used or installed in strict accordance with the manufacturer's instructions / recommendations.

As far as practicable, manufactured materials and equipment shall be delivered to the Site of the Work or the place of destination as the case may be as may be applicable, in the original shipping containers or packing boxes bearing the manufacturer's names and brands. The Contractor shall provide the Purchaser with copies of all manufacturer's instructions for all products used in the work.

16.0 COMMISSIONING AND OPERATIONAL SPARES, SPECIAL MAINTENANCE TOOLS AND CONSUMABLES

16.1 Commissioning Spares:

The Contractor shall supply with the plant, machinery and equipment, sufficient quantity of commissioning spares required for Installation, start-up and commissioning of the plant, machinery and equipment and for its efficient operation and Provisional Acceptance upon PG Test. These items shall be based on the Contractor's experience in commissioning similar plant and shall be available at Site along with the plant, machinery and equipment. The Contractor shall be responsible for having the required items at Site in sufficient quantities before the

© 2022 MECON LIMITED. All rights reserved

commencement of the start-up operation and commissioning. The prices of the same shall be included in the supply price of the plant, machinery and equipment. The list of commissioning spares included, with quantities, shall be indicated in the offer. If the quantities supplied are found to be inadequate, further quantity as may be required shall be supplied without any extra cost and without affecting the Work and in relation thereto if any taxes or duties are leviable the same shall be borne by the Contractor. Commissioning spares shall be the property of the Purchaser even if the same is not used in the commissioning. Left out spares, if any, after the Provisional Acceptance upon successful completion of the PG Test, out of those indicated in the list, shall be handed over to the Purchaser.

16.2 Maintenance Spares:

16.2.1 The Contractor shall submit with the tender an itemized list showing the unit cost and recommended number of spare parts for the first two (2) years of operation. The Contractor shall also submit drawings as required under Clause 17.6.1.7 of the General Conditions of Contract within six(6) months from the date of the award of the Contract or one half of the delivery period, whichever is earlier, to enable the Purchaser to scrutinize the spare parts list.

16.2.2 The Contractor shall also undertake that supplies of necessary spare parts will be made available at any time later at least during the life of the plant, machinery and equipment at reasonable price.

16.2.3 Spare parts not manufactured directly by the Contractor shall be properly identified and description/catalogues, etc. given in sufficient detail to enable the Purchaser to procure these directly from the manufacturers, if he so desires.

16.3 Special Maintenance Tools

The Contractor shall submit with the tender an itemized list of special maintenance tools and supply special maintenance tools required for the operation and maintenance of the plant, machinery and equipment supplied by him. The Contractor shall also undertake that supplies of necessary maintenance tools will be made available at any time later during the life of the plant, machinery and equipment at reasonable prices.

16.4 Consumables

The Contractor shall inform the Purchaser of the specifications including equivalent brand names and quantities of all consumable materials, such as lubricants, flushing oil, hydraulic fluids, chemicals, lumber, paper, etc. required during the start-up, commissioning, initial filling and yearly requirement for normal operation. Binding information on these shall be furnished to the

© 2022 MECON LIMITED. All rights reserved

Purchaser sufficiently in advance of the start-up and commissioning date of any equipment to plan procurement of these materials in time to meet all needs, but not later than six (6) months after the award of the Contract. Should the Contractor feel necessary to modify any of the data furnished by him, this should in any case be furnished at least six (6) months before the start-up and commissioning of the plant, machinery and equipment. The Purchaser shall ask the Contractor to supply such materials as set out in the Technical Specification required for start-up, commissioning, initial filling and performance test and the Contractor shall supply the same.

17.0 CONTRACT DRAWINGS, DOCUMENTS AND MANUALS

17.1 Scope

17.1.1 In as much as the Contractor is required to supply drawings, documents and manuals, he shall furnish the same free of charge to the Purchaser as part of the Contract. These shall include but not restricted to, design drawings, details and construction drawings, specifications bills of materials, manuals etc. unless otherwise defined in the Contract.

17.1.2 The Contractor shall be responsible and liable for any discrepancies, errors, or omissions in the drawings and other particulars supplied by him, whether such drawings and particulars have been approved by the Purchaser or not, provided that such discrepancies, errors or omissions are not due to incorrect information or particulars furnished in writing to the Contractor by the Purchaser or the Engineer unless the Contractor as designer and manufacturer of such equipment could have known or discovered the said discrepancies, errors and omissions. The Contractor shall pay for any extra cost incurred by the Purchaser due to any alterations necessitated by reasons of any discrepancy, error or omission in the drawings and particulars supplied by the Contractor.

17.1.3 The Contract Specifications and drawing shall be coordinated by the Contractor in such a manner that any work shown in the drawings, and not specified in the Contract, or specified in the Contract and not shown on the drawings is to be done without extra charge; unless such work is specifically exempted, it is to be executed in accordance with the Contract and in the same manner as if fully specified and shown in detail.

17.1.4 Drawings furnished by the Contractor shall be certified as correct for use and shall bear the signature of an authorized person of the Contractor.

17.1.5 Drawings, documents, manuals, spare parts list, audio visual training tutor in e-form for the benefit of operational and maintenance personal etc. shall be supplied in neat bound volumes and one soft format. All reproducible CAD format or linen/polythene films

transparencies shall be sent in mailing tubes and CDs or any other electronic form as

© 2022 MECON LIMITED. All rights reserved

mutually agreed upon. The quality of reproducible linen/polythene films/CDs to be used for supply of reproducible prints will have to be approved by the Purchaser. The drawings, documents etc. shall be mailed to the address of the Purchaser and the Contractor will be informed of these in time by the Purchaser.

17.2 Drawing Format

17.2.1 All drawings shall be dimensioned in the Metric System. Where drawings are usually made in the English (or other) systems, they shall also have Metric System dimensions in parenthesis or below the dimensions line. Titles and written notations shall be in English. While preparing the drawings, the drafting standards adopted such that good, clean and legible e-form of the drawings can be obtained. Drawings prepared by the Contractor shall be suitable for transmitting electronically and digitization for preservation.

17.2.2 All drawings prepared by the Contractor shall be of a reasonable scale and size of drawings and as per the Indian/ International standard and Contract Specifications. While preparing the drawings, the drafting standards adopted shall be such that good clean and legible e-form of the drawings can be obtained. Drawings prepared by the Contractor shall be suitable for transmitting electronically and digitization for preservation. In general, it is desired to keep all drawings the same size for ease of filing and reference. All design drawings shall be oriented to match the plant, machinery and equipment arrangement drawings and shall have a key plan identifying the plant area to which they apply. All drawings shall be made with the north arrow pointing to the top of the sheet or to the left. There shall be sufficient reference notes on the drawings to permit identification of all the drawings which are required for a proper understanding. Drawings and bills of materials shall show take-off quantities of all materials required for the work.

17.2.3 Bills of materials and drawings shall be cross referenced for easy identification. Altering on drawings shall be sufficiently large to be clearly legible.

17.2.4 The Contractor's standard drawings used on his contract shall have information pertaining to the specific item under consideration properly identified to distinguish it from information pertaining to other items which may be contained on the same drawing.

17.2.5 When a drawing is revised by the Contractor, every change made shall be identified on the drawing by circling the changes made and placing the revision number in a small triangle so as to be easily recognizable. When a subsequent revision is made, the circles made for the previous revision shall be erased and the current changes circled. However all revision numbers in the small triangle shall be retained. In addition a record of revisions, along with the co-ordinates showing the location of revisions shall be indicated

© 2022 MECON LIMITED. All rights reserved

at the left hand bottom corner of the drawings as per standard practice. In case of revisions of a drawing, for which a different number is allotted, the new drawings shall clearly indicate the number of the drawing which it supersedes.

17.2.6 All drawings/prints shall bear a stamp/indication at a prominent place indicating whether the drawings are preliminary, for approval or certified as final.

17.2.7 The Contractor shall prepare and furnish drawings exclusively against the Contract. Even standard drawings of the Contractor shall bear a reference in the drawings to the present Contract only. References pertaining to other contracts entered into with other parties shall not appear in the drawings submitted to the Purchaser.

17.3 Numbering System

Identification number or symbols that the Contractor elects to use for his own purpose are permissible. Bills of materials must be such that the Purchaser will be able to identify and purchase any needed replacement and spares. The method of numbering drawings specifications and bills of materials used by the Contractor shall be submitted to the Purchaser to enable the Purchaser to plan its archives. The above information shall be submitted along with the drawings submission schedule within three (3) months of the award of the Contract.

17.4 Working documents and drawings list with schedule

17.4.1 Drawings list and schedule

Within one (1) month of the award of the contract, the Contractor shall supply to the Purchaser five (5) copies of a complete list of all drawings by the title which the Contractor expects to supply against the contract, together with a detailed schedule for the submission of the drawing. The detailed schedule shall take into account the schedule for submission of the different types of drawings as outlined in Clause 17.14 and shall be in conformity with the overall time schedule established by the contractor in his tender, with subsequent modification if any, which has been made part of the contract.

17.4.2 General arrangement and layout drawings

17.4.2.1 Within one (1) month of the award of the Contract, the Contractor shall submit general arrangement and layout drawings including cross-sections for approval prior to the commencement of detailing and manufacture. In the layout drawings, the scope of supply of the Contractor shall be indicated in darker outlines to distinguish them from these items not in the Contractor's scope. The general arrangement and layout drawings referred to herein shall include the following:-

© 2022 MECON LIMITED. All rights reserved

(i) For plant, machinery and equipment this category shall include equipment outline and overall dimensions locations of equipment centerlines and working point elevations, functional and clearance requirements and important clearance dimensions. The particulars of refractory and other lining work. If any, and of all auxiliaries shall also be included.

(ii) For piping, this category shall include the flow diagram of all utilities and process fluids showing flow quantities, temperatures and pressures, all pumps, valves and instrumentation. The general arrangement and layout drawings for piping and duct work shall include physical location of equipment and general pipeline/duct routings to avoid equipment and electrical interferences and to make units requiring servicing and maintenance accessible. Both the flow sheets and pipe/duct routings drawings shall show inter-connecting pipelines ducts, and terminal points of the contractor's piping/ducting. This category shall also include diagrams of hydraulic, pneumatic, lubricating, ventilation and air conditioning systems. Where necessary, the Contractor shall also give diagrams and drawings showing waste disposal system.

(iii) For electrical, this category shall include layout drawings showing locations of all electrical equipment including motors, controls, limit, switches, solenoid valves, etc. motor list, list of electromagnetic valves, single line, inter-locking and sequence diagrams with instruction diagrams for control signaling and communication systems, location of devices on switch-gear, control panels, desks etc. including sectional views. The details furnished shall include complete cabling drawings giving, details of power and control cables, and terminal detail layout of trenches and cable racks/tunnels, conduits etc.

(iv) For instrumentation, this category shall include the control scheme and instrumentation flow diagrams and general arrangement drawings of instrument and control panels.

(v) Drawings for approval of the statutory authorities such as Indian Boiler Inspectorate, Inspectorate of Explosives, Electrical Inspectorate, Factory Inspectorate, environmental clearances and from other statutory and regulatory bodies, etc., as may be required under the applicable laws with reasonable assistance from Purchaser as may be deemed necessary.

17.4.2.2 The details furnished shall include necessary calculations and data required for

© 2022 MECON LIMITED. All rights reserved

demonstrating that all part of the plant, machinery and equipment to be furnished shall conform to the provisions of the Contract.

17.5 Foundation outline drawings and load data:

Certified foundation outline drawings including dimensional anchor/foundations Bolt location plan and loading drawings for all foundations and structures together with details drawings giving the size and specification of all foundation/anchor Bolts, sleeves, inserts, supports and other materials which have to be embedded in concrete. These drawings/data shall be furnished within three (3) months of the award of the contract or one-fourth of the delivery period, whichever is earlier.

17.6 Equipment details and other drawings and documents

17.6.1 The Contractor shall submit within the time limits indicated in Clause 17.14.3 detailed drawings, covering such drawings, bills of materials or other documents required for the manufacture, fabrication or supply of parts, site installation of piping and ductwork, Site installation of cabling, wiring, buswork, both overhead and underground, conduct, cable trays and supports, and for all refractory work as well as any other lining work. The detailed drawings shall include, but not be limited to, the following:

17.6.1.1 Dimension drawings showing dimensions required for the location of each individual equipment including, where necessary, its auxiliaries and control panels being supplied under the Contract, the method and size of the connections to the Purchaser's other equipment within three (3) months of the award of the contract or one-fourth of the delivery period whichever is earlier.

17.6.1.2 Assembly, sub-assembly and sectional drawings, as well as detailed drawings showing details of components, required for assembly before three (3) months prior to the first shipment or three-fourth of the delivery period, whichever is earlier. These shall be suitably cross referred to other drawings as required. The drawings shall be sufficiently detailed such that, if the purchaser so desires, it can procure spares and replacements from any competent manufacturer in India or abroad. Details of mechanical equipment shall include grades of finish, heat treatment, clearances (tolerances,) etc. and for electrical equipment these shall include, for example coil dimensions, size and section of conductors, type and size of insulation, process of impregnation etc.

17.6.1.3 Performance data, including graphs, efficiency and characteristic curves and other pertinent information of the individual/composite items of plant, machinery and equipment, within three (3) months of the award of the Contract or one- fourth of the delivery period which is earlier.

17.6.1.4 Drawing for the approval of statutory authorities, such as the Indian Boiler Inspectorate, Inspectorate of Explosives, etc. at least six (6) months prior to the first

© 2022 MECON LIMITED. All rights reserved

shipment.

17.6.1.5 Schematic drawings and inter-connecting wiring diagrams, showing, points where connections have to be made by the Purchaser, within three (3) months of the award of the contract or one-fourth of the delivery period, whichever is earlier.

17.6.1.6 Drawings showing refractory work and lining, with details of types and grades of refractories, size and shapes of bricks, complete bills of materials for all refractories, specifications including chemical and physical properties of all types of refractory materials, before six (6) months prior to the first shipment or three- fourth of the delivery period, whichever is earlier.

17.6.1.7 The manufacturing drawings required for the items in spare parts quotations to assess the requirements of spare parts before the placement of orders for spare parts and drawings of wearing parts showing materials of all components which require replacements due to wear in normal operation. A list of wearing parts, such as bearings, retainers, gaskets, Bolts chains etc., shall be furnished showing quantities furnished and installed, dimensions, materials used and expected useful life. The information furnished shall include complete specifications for

all wearing parts including grades of finish, heat treatment, tolerances etc. Further, drawings of components of proprietary items of the Contractor and his Sub-Contractor which can be manufactured by general engineering practice shall be furnished. If required, the Purchaser will give an undertaking that such items of proprietary nature will not be used for commercial purposes but will be exclusively used only for the maintenance purposes of the plant, machinery and equipment. All these drawings/information shall be supplied within six (6) months of the award of the Contract or one half of the delivery period, whichever is earlier.

17.6.1.8 Other drawings, specifications and data including those not described above but required by other agencies to perform their work/engineering. These shall be furnished during the execution of the Contract.

17.7 Bills of Materials:

Bills of materials shall be submitted along with the drawings to which they pertain and shall include listing of materials being supplied showing piece mark, description and reference drawing numbers. Packing lists described in the marking and shipping instructions covered in these general conditions must have the same identifications as shown on the applicable bills of materials.

17.8 Assembly and Erection Instructions and Drawings

17.8.1 The Contractor shall furnish Four (4) copies of the following:

17.8.1.1 Descriptive literature and drawings to illustrate the working principles, method of assembles and dismantling.

© 2022 MECON LIMITED. All rights reserved

17.8.1.2 Instruction books for proper erection, assembly of all equipment and necessary instruction for checking and recording proper assembly of the plant.

17.8.1.3 Instruction sheets for proper balancing, alignment, checking and calibration as may be necessary.

17.8.1.4 Erection drawings showing all details and particulars, in sequence, required for the erection and installation of the plant. In addition, the contractor's recommended time schedule and a chart showing the sequence of erection for the erection of equipment may also be furnished.

17.8.1.5 The documents, drawings, etc. referred to in Clause 17.8 shall be submitted in the time so as to be available at Site prior to the shipment of plant, machinery and equipment, but in any case at least three (3) months before the first shipment of plant, machinery and equipment or three-fourth of the delivery period, whichever is earlier.

17.9 Final Drawings

17.9.1 Along with the supply of the plant, machinery and equipment, sufficient set of prints shall be furnished for the original drawings, specifications, bills of materials, calculation sheets etc. made by the Contractor. These shall include but not restricted to the following:

(i) General arrangement, assembly, sub assembly and section drawings as well as detailed drawing showing details of components required for assembly with bills of materials and schedule of parts of each complete plant, machinery and equipment giving part numbers with reference to the assembly drawings and the total number of each part. These drawings shall be suitably cross referred to other drawing as may be required. The drawings shall be sufficiently detailed such that, if the Purchaser so desires, he can procure the spares and replacement from any competent supplier/manufacturer in India or abroad.

(ii) Performance data including graphs, efficiency and characteristic curves and other pertinent information of the individual/composite items of the plant, machinery and equipment as may be applicable.

(iii) Operation manual of the plant, machinery and equipment.

(iv) Maintenance manual covering all phases of both preventive and repair maintenance giving clear instructions regarding expected faults, method of detection and elimination, lubrication charts etc.

© 2022 MECON LIMITED. All rights reserved

(v) Flow diagrams and layouts of instrumentation, hydraulic, pneumatic, lubrication systems and utilities with all necessary dimensions and specifications.

(vi) Complete electrical, schematic and erection and inter connecting wiring diagrams for power distribution, control and instrumentation and logic circuits for the plant, machinery and equipment.

(vii) The Contractor shall supply the complete list of commissioning spares. In addition, the Contractor shall supply spares list giving complete list of replaceable parts for two (2) years normal operation indicating clearly operational, consumable, maintenance, replacement spares etc. In the maintenance spares the fast wearing spares shall be clearly identified. The spare parts list shall include necessary catalogues and manufacturing drawings and shall be supplied in the form of a table giving item designations and application, name of the manufacturer, manufacturer's specifications, type and form, reference drawing number, standards used, quantity installed and recommended for two (2) years normal operation, expected useful life, unit cost and in addition for electrical equipment the item designation shall show the entire module to be replaced in case of defect in any component. Detailed instructions both for original installation and future replacements shall be furnished.

(viii) Manufacturing drawings for fast wearing parts which require replacements due to wear and tear in the normal operation. The information furnished shall includecomplete specifications giving materials of construction, heat treatment, grade of finish, tolerance etc. for mechanical items and coil/cable dimensions, size and section of conductors, type and size of insulation etc. for electrical items.

17.9.2 The Contractor shall submit all stability certificate duly signed as required under the Factories Act, 1948 and amendments thereof etc. for the new building and structures under their scope.

17.9.3 Further drawing and specifications, datae not mentioned herein above specifically but required by the Purchaser in connection with the Contract and possible alterations shall also be supplied by the Contractor as and when required.

17.9.4 All drawings, specifications, materials and designs, if any, furnished by the Purchaser or his authorized representatives shall be treated as confidential and shall be the property of the Purchaser and shall be returned to the Purchaser upon completion of the work or upon termination of the Contract. No copies or duplications thereof shall be retained by the Contractor without the prior consent of the Purchaser. All drawing, specifications or manuals furnished by or through the Contractor shall be fully owned by the Purchaser who is entitled to use them for all purposes of execution of the Contract and operation

© 2022 MECON LIMITED. All rights reserved

and maintenance of the Plant being subject to the Contract. However, the registered intellectual property right for the drawings and documents as stated above furnished by or through the Contractor shall remain with the Contractor.

17.10 **Spares List, Maintenance and Operational Manuals**

17.10.1 The Contractor shall supply Four (4) sets of spare parts list giving the complete list of all parts required as commissioning spares, which shall be supplied along with the equipment in addition, the Contractor shall supply spares list giving complete list of replaceable parts for two years, normal operation, indicating clearly operational, consumable, maintenance replacements spares, etc. In the maintenance spares, fast wearing and insurance spares shall be clearly identified. The spare parts list shall include necessary catalogues and manufacturing drawings and shall be supplied in the form of a table giving items designation and application, name of manufacturer, manufacturer's specification., type and form, reference drawing number, standard used, quantity installed, quantity recommended for two years normal operation, unit price and in addition for electrical equipment the item designation shall show the entire module to be replaced in case of defect in any component. Detailed instructions both for original installation and future replacements shall be furnished.

17.10.2 Four (4) copies of maintenance manuals covering all phases of both preventive and repair maintenance shall be supplied, including lubricating charts, showing every point requiring lubrication, grade of lubricant, schedule for lubrication, and, where required, the correct amount and grade of oil or grease necessary for refill after drainage.

17.10.3 Four (4) copies of operating instructions shall be provided, including all details necessary to ensure proper procedure and sequence of operation.

17.10.4 The documents, drawings, etc. referred to in this Clause shall be submitted at least three (3) months prior to the first shipment of equipment by the Contractor or three-fourth of the delivery period, whichever is earlier.

17.10.5 All manuals, documents, spare parts, lists etc. shall be supplied in neat bound volumes in indicated copies along with one soft copy.

17.11 **Approval of drawings**

17.11.1 The Contractor shall submit such drawings, specification and bills of materials as the Purchaser or Engineer may require in accordance with the time schedule which is part of the Contract or any other reasonable schedule which the Purchaser or Engineer may require. The Contractor shall submit such drawings and documents singly or in small

© 2022 MECON LIMITED. All rights reserved

batches as fast as they are available for shipment so as to prevent large accumulations of work from delaying approval procedures.

17.11.2 Approval of the Contractor's drawings, specifications and bills of materials will be mailed within four (4) weeks of the receipt of drawings etc. In case, a delay is anticipated, the Contractor will be notified.

17.11.3 Approval of the Contractor's drawings, specifications and bill of materials means that these will be checked for conformity with applicable specification and general conformity with the engineering requirements for the area covered in the Contract. It is understood that approval by the Purchaser does not include checking for drafting and other errors, but only review of basic concepts and general principles involved.

17.11.4 The Contractor shall make any changes in the design, with the prior Approval of the Purchaser, which are necessary to make the equipment conform to the provisions and intents of the Contract without additional cost to the Purchaser. The Purchaser's approval of the Contractor's drawings, specifications and bills of materials shall not relieve the Contractor of responsibility to comply with the intent of the Contract. Fabrication or Procurement without approved drawings or prior to approval of drawings shall be at the Contractor's risk.

17.11.5 When the Contractor has a drawing ready for approval, he shall send two (2) prints to the Purchaser and two (2) paper re-producibles to the Engineer. The paper reproducible shall be of a quality approved by the Purchaser. If the drawing is "Not approved" or "Approved as noted" one marked up print with appropriate comments will be returned to the Contractor for correction and re-submission. The Contractor shall resubmit the final drawings incorporating all the changes within two (2) weeks after the receipt of the drawings with the Purchaser's comments. The final drawings shall be re-submitted in three (3) paper re-producibles and two (2) prints to the Engineer and Purchaser as above. One (1) print of final approved drawing will be furnished to the Contractor.

17.11.6 Upon approval by the Purchaser, the drawings shall become Contract drawings and thereafter the Contractor shall not depart from them in any way whatsoever except with the written permission of the Purchaser.

17.11.7 All drawings and documents shall be sent by first class air mail. In case, these are sent by air freight, all expenses incurred by the Purchaser and Engineer for customs, handling and forwarding shall be payable by the Contractor. All reproducibles / linen transparencies shall be sent in mailing tubes.

© 2022 MECON LIMITED. All rights reserved

17.12 **Drawings/ Documents at delivery of Equipment**

17.12.1 With the delivery of equipment, the Contractor shall submit three (3) sets of all test certificates.

17.12.2 In addition one (1) set of drawings and documents, covered under Clause 17.11 shall be supplied along with the first shipment of plant, machinery and equipment.

17.13 **Drawings and Documents at Completion of Work:**

17.13.1 At the completion of PG Test and issuance of the PAC, the Contractor shall supply for all items being supplied by him and his sub- contractors one (1) reproducible on CAD format on CDalong with five (5) prints of each original drawings, specification, bills of materials, calculation sheets, etc. made by the Contractor and his Sub-Contractors, incorporating all changes made during the execution of the work, including those made at site during erection, assembly and start-up, indicating the authorities who made the changes.
In addition three (3) sets of schedule of parts of each complete equipment, giving part numbers with reference to assembly drawings and the total number of each part, as shall be furnished.

17.13.2 Until such time as the supply of drawings, documents and information required as per Clause 17 is completed, the Purchaser will not finally accept the plant as supplied by the Contractor.

17.13.3 The Contractor shall submit the various drawings and documents covered in this Clause as per the following tentative schedule:

Clause No.	Brief description of type of drawings/documents	Time of submission
17.3	Details of numbering system	Within three (3) weeks of award of Contract.
17.4.1	Drawing list and schedule.	Within one (1) month of award of Contract.
17.4.2	General arrangement and layout drawings	Within one (1) month of award of Contract.

© 2022 MECON LIMITED. All rights reserved

Clause No.	Brief description of type of drawings/documents	Time of submission
17.5	Certified foundation outline drawings, data, etc.	Within three (3) months of the award of Contract or one fourth of the delivery period, whichever is earlier.
17.6.1.3	Performance data, etc.	Within three (3) months of the award of Contract or one fourth of the delivery period, whichever is earlier.
17.6.1.1	Dimension drawings.	Within three (3) months of the award of Contract or one fourth of the delivery period, whichever is earlier.
17.6.1.5	Schematic drawings, etc.	Within three (3) months of the award of Contract or one fourth of the delivery period, whichever is earlier.
17.6.1.7	Wearing parts drawings, spare parts drawings, drawing of components of proprietary items	Within six (6) months of the award of Contract or one half of the delivery period, whichever is earlier.
17.6.1.4	Drawings for approval of statutory authorities.	Six (6) months prior to first shipment of equipment.
17.6.1.6	Drawings and documents for refractory and lining work.	Six (6) months prior to first shipment of equipment or three-fourth of delivery period, whichever is earlier.
17.6.1.2	Detailed drawings for assembly, sub-assembly, components etc.	Three (3) months prior to first shipment of equipment or three-fourth of delivery period whichever is earlier.
17.8 and 17.9	Assembly and erection instructions and drawings.	Three (3) months prior to first shipment of equipment or three-fourth of delivery period whichever is earlier.
17.11	Spare parts, maintenance and operational manuals.	Three (3) months prior to first shipment of equipment or three-fourth of delivery period whichever is earlier.
17.13	Test Certificates.	With first shipment of equipment delivery.
17.14.1	Completion drawings and documents.	At the time of issue of provisional acceptance Certificate.

© 2022 MECON LIMITED. All rights reserved

18.0 CONTRACT PRICE

The contract price will include the aggregate of the price for imported plant, machinery and equipment, foreign services (including design and drawings, training) and all indigenous supplies and services (including indigenous design and drawings, if any), including Installation and Erection, Commissioning, PG test and the price towards all the obligations agreed to be performed which are covered in the scope of Work and elsewhere in the Contract. The contract price will exclude the Indian taxes, duties, levies, etc. for imported equipment and services but will include all Indian taxes, duties, levies, etc. on indigenous supplies and services. Delivery of all imported drawings and documents is on DDP (delivery duty paid) basis as per INCOTERMS at ex-site and the delivery of indigenous Drawings and Documents shall be at Purchaser's office.

The Contractor's prices for materials to be supplied under the Contract shall include charges for packing of a kind and quality suitable for shipment overseas and tropical conditions for imported equipment and as customary for indigenous equipment for delivery in good condition.

19.0 ASSIGNING OF CLAIMS AND INTEREST IN THE CONTRACT

The Contractor shall not assign his claim or interest in the Contract without the written permission of the Purchaser which shall not be unreasonably withheld. However, if it is mandatorily and statutorily required as per the applicable laws of the Contractor/s home country, the Contractor's request to assign/or subrogation, as the case may be, its rights and obligations under the Contract to a Credit Insurance company or to its parent company may be considered by the Purchaser after it is satisfied about the real need thereof, on such terms and conditions as the Purchaser thinks due and proper, provided however that the assignee / subrogatee agrees to perform the Contract signed by the Contractor mutatis-mutandis

20.0 INSPECTION AND TESTS DURING MANUFACTURE

20.1 The Purchaser or his authorized representative shall have the right of inspecting and testing the Contract work or any part thereof at any time during the manufacture as per approved Quality Assurance Plan (QAP) and the Contractor on demand from the Purchaser shall carry out such tests in an appropriate manner in the presence of and free of charge to the Purchaser. Should the Contractor, himself not be in a position to carry out the tests, he shall, on the Purchaser's demand, prepare specimens or samples and send them at his own cost, to such testing stations as the Purchaser may specify and the cost for the tests so effected shall be to the Contractor's account. Should a part of the plant, machinery and equipment be manufactured not on the Contractor's own premises but on other premises, the Contractor shall likewise obtain permission for the Purchaser to inspect and test the work as if the said plant were being manufactured on the Contractor's premises. The inspection, examination or testing carried out at the presence of the

© 2022 MECON LIMITED. All rights reserved

Purchaser shall not release the Contractor from any of the obligations and responsibilities under the Contract.

20.2 The inspection and tests shall be so conducted as not unreasonably to impede the progress of manufacture.

20.3 The Purchaser shall have the right to be present at all tests carried out by the Contractor. The Contractor, on being requested so to act, shall present sufficient documentary evidence as per the approved QAP that the materials used will meet the requirements of good engineering practice. With respect of materials used for the construction of the plant and equipment, such as, structural steel, mild steel, cast iron, cast steel, etc., the Contractor shall produce the requisite test certificates along with specimen and test pieces on which tests were carried out by the manufacturer, at the time of examination as per the QAP. With respect to large castings or forgings, the Contractor shall arrange for the necessary X-Ray and ultrasonic tests to be carried out at his own cost if called for, the samples and specimens shall become the Purchaser's property. The Contractor shall notify the Purchaser in an appropriate manner as to the Contract work particularly before any assembly in order that the Inspections or tests can be carried out as may be required to ascertain, without prejudice to the Contractor's liability, whether the materials and/or services are in conformity with the requirements of the Contract.

20.4 The Purchaser shall, on giving reasonable notice in writing to the Contractor setting out any grounds of objections which he may have in respect of the work, be at liberty to reject all or any plant or workmanship on the basis of any grounds of objection, which are not in accordance with the Contract or do not fulfill the requirements of the Contract.

20.5 Within four (4) weeks of the award of the Contract, the Contractor shall communicate to the Purchaser details of the tests to be conducted and obtain his approval for the same. Approval for the above will be generally given by the Purchaser within four (4) weeks of the receipt of the information.

The Contractor shall also furnish a list of various components, sub-assemblies and assemblies which the Contractor proposes to put up against the plant, machinery and equipment for inspection. The Purchaser has a right to make modifications in this list to ensure that the minimum amount of assembly work is done at Site.

The Contractor shall give the Purchaser a minimum of three (3) weeks' notice of any material being ready for testing, specifying the period likely to be required for such testing, and the Purchaser or his said representative shall, (unless the inspection or test is voluntarily waived), on giving 24 (twenty four) hours previous notice in writing to the Contractor, attend at the Contractor's or Sub-Contractor's premises (as the case may be)and complete the testing as soon as possible in a period, normally of not more than eight (8) days, from the date on which the

© 2022 MECON LIMITED. All rights reserved

material is notified as being ready for testing or inspection, failing which visit the Contractor may proceed with the tests which shall be deemed to have been made in the Purchaser's presence and shall forthwith forward to the Purchaser duly certified copies of the test reports. In cases where the Purchaser is requested to carry out inspection when in fact the equipment is not ready for testing, the cost of such visits, including incidental expenses, shall be to the Contractor's account.

20.6 The Contractor shall be responsible to perform or to have performed by others any and all tests and inspections requested by the Purchaser or his authorized representative as part of his duties under the Contract. The Contractor shall inspect the work for which he is responsible to ensure proper performance. To this end, he shall prepare and submit all pre-inspection forms, releases, post-inspection reports, test reports and such other documentation in such details and at such interval as the Purchaser or his authorised representative may request.

20.7 If the Purchaser has reasons to suspect the existence of hidden defects due to faulty materials and workmanship, he will have the right to order the removal and rebuilding of the doubtful parts of the work or of carrying out additional tests as required. The costs involved in such operation shall be to the account of the Contractor if the existence of such defect is proved; otherwise the costs involved shall be to the account of the Purchaser.

20.8 Failure on the part of the Inspector to inspect or to reject after inspection, Work which later proves to be defective, shall not relieve the Contractor from warranties, commitments and obligations which he undertakes under this Contract. The Contractor is solely responsible for the accuracy, quality and completeness of his work and supply.

20.9 On the completion of shop fabrication, the Contractor shall assemble in his shop all fabricated and procured parts in to sub-assemblies and complete assemblies as stated in Clause 20.5 to ensure proper field erection or as directed by the Purchaser. All parts shall be match-marked by the Contractor to facilitate reassembly at site.

20.10 In all cases whether at the premises or work of the Contractor or of any sub-contractor, the Contractor, except where otherwise specified, shall provide, free of charge to the Purchaser, such labour, materials, electricity, fuel, water stores, apparatus, instruments, shop drawings and performance data, including graphs, efficiency and characteristic curves and other pertinent information as may reasonably be demanded, to carry out efficiently such tests of the plant, machinery and equipment in accordance with the Contract and shall give facilities to the Purchaser or his representative to accomplish such testing.

20.11 When the tests have been satisfactorily completed at the Contractor's or Sub-Contractors work, the Purchaser or his representative shall forthwith issue a certificate to that effect. If a final certificate cannot be issued, preliminary or provisional certificate shall be issued. If the tests were not witnessed by the Purchaser or his representative, the certificate may be issued on receipt of

© 2022 MECON LIMITED. All rights reserved

the test report from the Contractor but not later than 15 (fifteen) days after the receipt of the test reports by the Purchaser. No plant shall be shipped or dispatched before the certificate of acceptance for shipment as per Clause 23.4 has been issued. The Purchaser has a right to withhold such certificates if the sub-assemblies and assemblies covered in the list are not as per the approved list in Clause 20.5. The satisfactory Completion of these tests or the issue of the certificate shall not bind the Purchaser to accept the plant, should it, on further tests, after erection be found not to comply with the Contract.

20.12 Where the Contract is concluded for the supply of main plant, machinery and equipment as well as for spare parts, the Contractor shall tender for inspection the spare parts only after the main equipment has been tendered for inspection and accepted.

21.0 TESTS ON COMPLETION

Where possible all tests / inspection shall be carried out before shipment or dispatch. Should however, it become necessary for some tests / inspection to be carried out after Installation, they shall be carried out in the presence of the Contractor's representative. Should however, it becomes necessary for final test as to performance and guarantees to be held over until the plant is erected at Site, they shall be carried out in the presence of the Purchaser's representative within such time as may be considered reasonable by the Purchaser. Should the results of the tests not come within the margin specified, the test shall be repeated within 10 (ten) days from the date the plant, machinery and equipment is ready for re-test. If the results are still not satisfactory, further test, to the extent permissible by the terms of the Contract and at the sole discretion of the Purchaser, shall be conducted by the Contractor in the presence of the Purchaser's representatives after executing the necessary adjustments, repairs, rectifications and modifications etc., the cost of which shall be borne by the Contractor.

22.0 REJECTION OF DEFECTIVE PLANT, MATERIALS AND WORKMANSHIP

22.1 If the completed plant, machinery and equipment or any portion thereof at any time before it is finally accepted by issue of Final Acceptance Certificate be defective or fails to fulfill the requirements of the Contract, the Purchaser shall be at liberty to reject any such work done or plant, machinery and equipment supplied or materials used by the Contractor or Sub-Contractor.

The Purchaser shall give the Contractor notice as soon as reasonably practicable, setting forth particulars of such defects or failure, and, in so far as may be necessary, place the plant at the Contractor's disposal. The Contractor shall, with all speed and at his own expense, make it comply with the requirements of the Contract. Should he fail to do so within a reasonable time as may be determined by the Purchaser, the Purchaser reserves the right to reject and replace at the cost of the Contractor, the whole or any portion of the plant, machinery and equipment, as the case may be, which is defective or fails to fulfill the requirements of the Contract.

© 2022 MECON LIMITED. All rights reserved

Such replacement, shall be carried out by the Purchaser within a reasonable time and at a reasonable price, and where reasonably possible to the same Contract Specification and under competitive conditions. The Contractor's liability under this Clause shall be satisfied by the payment to the Purchaser immediately on demand of all moneys paid by the Purchaser to the Contractor in respect of such plant, machinery and equipment plus the ascertained difference, if any, between the replacement documented price of the plant, machinery and equipment, including charges for installation and the original contract price, including the charges for installation in respect of such defective plant including all incidental charges incurred in relation thereto. Should the Purchaser not get the rejected plant, machinery and equipment so replaced within a reasonable time as may be determined by the Purchase, the Contractor's liability under this Clause will be satisfied by the repayment of all moneys paid by the Purchaser to him in respect of such rejected plant, machinery and equipment. In addition to the above, the Purchaser reserves the right to exercise all its right under this Contract and those available under the applicable law in relation to claim damages and losses that the Purchaser may incur in relation thereto.

22.2 In the event of rejection, the Purchaser shall be entitled to the use of the plant, machinery and equipment in a reasonable and proper manner for a time reasonably sufficient to enable him to obtain other replacement plant, machinery and equipment.

22.3 Subject to Clause 22.2 hereinabove, the Contractor may be entitled to remove and retain all plant, machinery and equipment which the Purchaser may have replaced at the Contractor's cost. If the Contractor fails to remove such rejected / replaced plant within mutually agreed time period, the Purchaser shall be entitled to cause the removal thereof and all expenses incurred by the Purchaser in connection, therewith shall be to the Contractor's account.

23.0 PACKING, PROTECTIVE PAINTING, MARKING AND SHIPPING

23.1 PACKING AND PROTECTIVE PAINTING:

23.1.1 The Contractor shall include and provide for securely protecting and packing the plant, machinery and equipment in accordance with the best established practices so as to protect the contents from damage during transit from point of manufacture until after arrival at the installation Site under conditions which may involve multiple handling, transport by ship, rail and road, re-shipment, storage, exposure to heat, moisture, rain etc. and possibility of pilferage. The packing standards shall be as per Technical Specification, if specified and as may be accepted by the Purchaser or its representative and wherever considered necessary, the Purchaser or his representative may check the packing before dispatch and may ask for modifications to the extent considered necessary to be carried out in the packing and the Contractor shall carry out the same. Special precautions as outlined in Clause 23.1.3 to Clause 23.1.8 below shall be taken into consideration. All packing shall allow for easy removal and checking to the extent practicable at Site. All

© 2022 MECON LIMITED. All rights reserved

packing cases, packing and other similar materials shall be new and supplied free by the Contractor and the same will not be returned, unless otherwise stated in the Contract.

23.1.2 The Contractor shall properly clean and/or shot blast the plant, machinery and equipment and apply one coat of rust inhibiter and a shop coat of paint. Shop finished plant, machinery and equipment shall be supplied finish painted. All primer, paints and colours shall be mutually agreed.

23.1.3 Heavy machinery shall be mounted and bolted to skids which shall be of sufficient strength to support and prevent distortion to the machine. All openings of pipes, large valves and machinery must be protected by wooden covers or plugs and machined threads must be covered by caps to protect against damage in transit.

23.1.4 All equipment and parts susceptible to corrosion by exposure to moisture and all electrical equipment shall be thoroughly protected against damage during transit and storage. Machine-finished surfaces shall be coated with approved anti-rust compound and all unfinished surfaces of machinery are to be given one coat of rust protective paint. In addition to normal packing, all electrical equipment shall be wrapped in polyethylene or polypropylene plastic sheet and openings in electrical equipment shall be sealed with water proof tapes. A protective grease proof paper shall be inserted between the brushes and armature motors and generators.

23.1.5 The Contractor shall deliver the following stores in individual separate packages, having markings, corresponding to the equipment.
23.1.5.1Foundation Bolts, embedments, etc. 23.1.5.2Commissioning spares.
23.1.5.3Special tools for repair and maintenance. 23.1.5.4Refractory and lining materials
23.1.5.5Specialized installation tools, tackle, instruments and appliances.
23.1.5.6Consumables.
23.1.5.7Spare parts and accessories.

23.1.6 Fragile items shall be wrapped in crepe cellulose wadding or some equally efficient cushioning material and stuffed / floated in excelsior and packed in substantial wooden cover with special precaution against risk breakage.

23.1.7 The shipment dimensions of each package shall not exceed the maximum dimension of packing which can be accepted for transport over the roads or broad gauge system of the Indian Railways or vessel. If, however, over size consignments are unavoidable, the Contractor shall give proper notice to the Purchaser to arrange for the movement of over-size consignment.

© 2022 MECON LIMITED. All rights reserved

23.1.8 Each equipment or parts of equipment shall, when shipped or dispatched, be tagged with reference to the assembly drawings and corresponding part number.

23.1.9 Notwithstanding anything stated in this Clause, the Contractor shall be entirely responsible for loss, damage or deterioration to the, materials occasioned by faulty, defective or insecure packing, or due to improper or insufficient protective measures.

23.2 MARKING:

23.2.1 The following shipping mark, giving the purchase order number shall be clearly stenciled with good quality non-fading paint on one side of the shipping package in characters at least 150 mm high where size of package will permit:

M/s UTKARSHA ALUMINIUM DHATU NIGAM LIMITED (UADNL)
PACKAGE No.
Contract No.
Package number as given above is to be followed sequentially in ascending order. There is to be no duplication of package numbers on any individual order.

23.2.2 On the top and one end the following shall be marked:
M/s UTKARSHA ALUMINIUM DHATU NIGAM LIMITED (UADNL)

Package No.

23.2.3 On one end the following information shall be marked:
UTKARSHA ALUMINIUM DHATU
NIGAM LIMITED (UADNL)
GROSS WEIGHT (KILOGRAMS)
NET WEIGHT (KILOGRAMS)
LENGTH (METERS)
WIDTH (METERS)
HEIGHT (METERS)
Made in (Country of Origin)

23.2.4 On the side opposite the main packing shown in Clause 23.2.1 above, the name of the Contractor, contract number, Contractor's bill of material item number-or other identifying data shall be clearly marked.

23.2.5 For the identification of unloading areas at the plant, machinery and equipment collared bands shall be painted encircling all packages, crates or boxes. Colour code for Contracts will be mutually agreed.

© 2022 MECON LIMITED. All rights reserved

23.2.6 In the case of bundles or metal base, the proper markings, as here in designated, are to be placed on metal tags which are to be securely attached to the bundle or bar as conspicuously as possible.

23.2.7 If necessary, packages must be marked on all four sides with arrows pointing to the top.

23.2.8 Easily damaged material or radioactive or perishable goods must be marked on all sides with appropriate cautionary symbols.

23.2.9 When required due to length of unbalanced weight, the container or pieces shall have locations of cables or hooks and the center of balance indicated by proper markings.

23.2.10 Fabricated sections of structures and equipment must have their respective piece marks permanently stamped into the piece to a depth of not less than one mm, and the stamped area painted with rust preventive paint to a radial distance of fifty mm on the surrounding area.

23.3 SHIPPING

23.3.1 The Contractor shall prepare and furnish the Purchaser within three (3) months before the date of first shipment a shipping schedule showing the breakdown of the complete plant, machinery and equipment into various shipment units, with approximate weight and dimensions and the respective dates upon which such units will be ready for dispatches from the point of manufacture. This schedule shall be taken into consideration, for Installation. The Contractor shall promptly give written notice to the Purchaser of any anticipated delay in maintaining the said schedule, stating the reasons therefore. The Purchaser will book space on available vessels scheduled to sail on dates as soon as practicable, after the respective dates on which the shipment units are to be ready for shipment at the indicated port and inform the Contractor accordingly.

23.3.2 Shipping details shall be submitted in 10 (ten) sets and shall specifically quote the shipping marking, designation of contents and dimension in metric units, itemized net weight and total gross weight of each package. One (1) complete set of negotiable shipping documents shall be forwarded to the Purchaser immediately after shipment. Complete shipping documents shall be made available to the Purchaser at least 3 weeks in advance of the arrival of the ship at the port of unloading. Further details of shipping schedules, shipping notes and documents will be finalized at the time of the contract or thereafter.

© 2022 MECON LIMITED. All rights reserved

23.3.3 In case the vessel arrives at the port of destination and the corresponding shipping documents are not in the possession of the Purchaser due to the Contractor's inability to provide the same before the vessel's arrival, the Contractor will be responsible for any expenses due to storage, etc which may be imposed against the Purchaser.

23.3.4 The Parties shall be responsible for obtaining, their respective necessary approvals from the authorities for transportation of the plant, machinery and equipment. The Parties shall use its best endeavors in a timely and expeditious manner to assist the other contracting party in obtaining such approvals, if requested. The Contractor shall indemnify and hold harmless the Purchaser from and against any claim for damages to roads, bridges or any other traffic facilities that may be caused by the transport of the plant, machinery and equipment to the Site in case of FOR Site Contracts.

23.4. NOTICE TO PURCHASER AND ACCEPTANCE FOR SHIPMENT

When all tests to be performed in the Contractor's or Sub-Contractor's premises under the terms of this Contract have been successfully carried out, the plant, machinery and equipment will be accepted for dispatch, and the Purchaser or his duly authorized representative will issue an acceptance certificate upon the receipt of which the plant, machinery and equipment shall be packed up forthwith and made ready for dispatch. No plant, machinery and equipment shall be dispatched unless an acceptance certificate has been issued for the same and dispatch instruction given by the Purchaser to the Contractor which will be issued within seven (7) days of completion of inspection/testing. The Purchaser may also at its sole discretion release in lieu of such certificate a waiver certificate. While applying for such certificates, the Contractor shall list all parts, sub-assemblies and assemblies covered and shall indicate all inspections and tests performed on them during manufacture, with copies of inspection certificates. The satisfactory Completion of these tests or the issue of the certificate shall not bind the Purchaser to accept the plant, machinery and equipment, should it, on further tests, after Installation be found not to comply with the Contract and shall not release the Contractor from its liabilities, responsibilities and obligations for the due performance of the Contract. While giving intimation for dispatch of materials the Contractor shall quote:

Contract no. brief description of materials shipped, port of shipment, date of shipment, bill of lading and value of the consignment.

Corresponding data shall be shown for other means of transport.

© 2022 MECON LIMITED. All rights reserved

24.0 STORAGE

In case the shipment of material to be furnished under the contract is delayed due to the Purchaser's inability to arrange ocean shipment, unfavorable unloading conditions at an Indian Port, or if shipment cannot be made for any other reason beyond the Purchaser's control, the Contractor may be requested to either hold the shipment at his factory or place the same in proper storage approved by the Purchaser. In the event the material is placed in storage, storage charges are to be mutually agreed upon which charges in no event shall exceed the warehouse storage charges as fixed by tariffs prevailing at the time. If storage is away from the contractor's factory, the Purchaser will have the right, if he so elects and, acts promptly, to designate the storage in which the Contractor will place the plant, but such storage will be subject to the Contractor's approval as to suitability. In the event the plant is to be held at the contractor's factory or placed in the storage as above provided the contractor will promptly notify the purchaser whether or not the Contractor's general Plant Insurance covers the plant so that the purchaser will have an opportunity to obtain insurance if necessary. Should any shipment or part of it be cancelled or held back due to the non-compliance by the contractor of the purchaser's instructions, incorrect markings of packages, or mistakes of the kind, the storage charges and extra insurance premium deriving there from, and any other charges eventually incurred, will be to the account of the Contractor.

Any charges, including insurance, which may be for the Purchaser's account as above provides will be paid by the contractor and billed to the Purchaser after purchaser's approval. The holding of the plant at the contractor's factory or placing in storage as above provided will be deemed equivalent to "Shipment" for all purposes of payment and the contractor will allow the purchaser credit for freight on such plant unless the same is caused due to non-compliance by the Contractor or for reasons attributable to the Contractor. The plant so held at the contractor's factory or placed in storage will be held for Purchaser's account, and the contractor will upon request, deliver to the Purchaser such instruments as may be reasonably requested evidencing title in the Purchaser.

25.0 PASSAGE OF RISK AND INSURANCE

25.1 Passage of Risks

25.1.1 In case of imported materials and plant, machinery and equipment, for FOB Contracts, the risk shall pass from the Contractor to the Purchaser when the materials and equipment are placed on board the vessel for shipment as defined by "FOB Port of Shipment" INCOTERMS. In case of indigenous materials and equipment the Contractor shall deliver the same on FOR Site basis including unloading at plant Site and the risk shall pass from the Contractor to the Purchaser when the materials and equipment are delivered to the Site on board road transport vehicle arranged by the Contractor.

© 2022 MECON LIMITED. All rights reserved

25.1.2 If any contract work, including supplies and services, perishes or becomes unserviceable from any cause whatsoever, the Contractor shall, on demand by the Purchaser, make replacement and in such a way as to avoid disturbances in the general progress of the Installation of the Work. This shall apply irrespective of the question whether or not the risk has passed to the Purchaser, or who shall be responsible for the unserviceableness as aforesaid.

25.2 Insurance

In case of FOB port of shipment delivery for imported equipment, the Contractor shall arrange insurance for all equipment and materials to be supplied by him up to FOB port of shipment. In case of delivery of indigenous goods the Contractor shall arrange insurance for all equipment and materials up to the Site and unloading thereof. In order to enable the Purchaser to arrange proper marine insurance for imported equipment, the Contractor shall co-operate with the Purchaser and provide necessary documentation in sufficient time for each package. Costs resulting from non-compliance by the Contractor of this provision shall be charged to the Contractor.

25.2.1 Indigenous Cargo Insurance: For indigenous supplies, the policy to be maintained by the Contractor shall insure the goods originating in India from the Contractor's/Supplier's warehouse to Plant's warehouse/Site and up to completion of Installation, erection and commissioning. This will be inclusive of supplies to and from warehouse/factory of intermediate processors/suppliers. This policy will also cover the replacement items, if any.

25.2.2 Third Party Liability Insurance: The Insurance policy to be maintained by the Contractor shall cover third party liability. The third party liability shall cover the loss/disablement of human life (persons not belonging to the Contractor) and also cover the risk of damages to others' materials/equipment/properties during construction, erection and commissioning at Site. The value of third party liability for compensation for loss of human life or partial/full disablement shall be of required statutory value and shall nevertheless cover such compensation as may be awarded by a Court of Law in India or abroad and cover for damage to others' equipment/property.

25.2.3 Automobile Liability Insurance: Covering use of vehicles/mobile equipment used by the Contractor or its Sub-Contractors (whether or not owned by them) in connection with the execution of the Contract.

25.2.4 Contractor shall ensure that where applicable, its Sub-Contractor(s) shall take out and maintain in effect adequate insurance policies for their personnel and vehicles and for work executed by them under the Contract, unless such Sub-Contractors are covered by the policies taken out by the Contractor.

© 2022 MECON LIMITED. All rights reserved

25.2.5 The Purchaser shall be the principal holder of the policy along with the Contractor. The Sub-Contractors of the Contractor shall not be holders or beneficiaries in the policy nor shall they be named in the policy. Purchaser reserves the exclusive right to assign the policy.

25.2.6 While the payment of premium may be phased in agreement with the insurance company, at no time shall goods and services required to be provided by the Contractor shall remain uninsured by the Contractor.

25.2.7 A copy of the Insurance policy shall be made available by the Contractor to the Purchaser within 15 (fifteen) days in advance, before start of the first dispatch and the contractor shall ensure that the policy shall be kept alive and valid at all times up to date of commissioning.

25.2.8 The Purchaser reserves the right to take out whatever policy that is deemed necessary by him if the Contractor fails to keep the said policy alive and valid at all times and/or causes lapses in payment of premium thereby jeopardizing the said policy. The cost of such policy(s) shall be recovered / deducted from the amount payable to the Contractor.

25.2.9 The surrounding value shall be Indian Rupees [●] (Rs. [●]).

25.3 Upon arrival of plant, machinery and equipment at Site the Contractor shall assume custody thereof and remain responsible thereafter for safe custody until the whole plant, machinery and equipment is successfully commissioned.

25.4 In order to adequately cover the works under such composite and comprehensive insurance, the Contractor shall fulfill the necessary requirements/obligations as per the terms of the Contract.

25.5 The Contractor shall arrange Accident Insurance Policy for all his personnel including foreign experts/specialists/personnel deputed to Site and Contractor's/his Sub-Contractors' manufacturing works as well as for his Indian engineers & supervisory staff. The Contractor shall also take out for his Indian workmen a separate policy as per Employee's Compensation Act and the applicable laws.

25.6 As soon as shipping documents for each shipment are ready, the Contractor shall cable to the Purchaser the details of the consignment along with its value giving the name of the vessel by which the shipment is made, port of shipment, date of shipment, net and gross weight of the materials in kilograms, volume of the package, FOB value of material, freight value and other shipping particulars etc. Costs resulting from non-compliance by the Contractor of these provisions shall be charged to the Contractor.

© 2022 MECON LIMITED. All rights reserved

25.7 All the insurance claims for insurance policies maintained by the Contractor shall be processed by the Contractor and the items which are missing / damaged in transit or during handling, storage, erection and commissioning, shall be replaced / repaired by them without any extra cost to the Purchaser. Costs resulting from non-compliance by the Contractor of provisions of these sub clauses shall be charged to the Contractor.

25.8 All money received under any such policy shall be applied towards the replacement and repair of the plant, machinery and equipment damaged or destroyed or for the purpose for which it has been claimed but this provision shall not affect the Contractor's liabilities under the Contract. The provisions contained in this Clause are not intended to and do not impair or in any manner limit the liabilities or obligations assumed by the Contractor as may be set forth more specifically elsewhere in the Contract.

26.0 TIME FOR COMPLETION

26.1 The time stipulated for dispatch, delivery or completion as the case may be dates to be computed from the Effective Date of the Contract. The overall time schedule for the entire work showing various activities like design & engineering, supply of equipment, civil and structural steelwork, Installation, Testing and Commissioning etc. shall be as per the Bar/ Pert Chart enclosed with Contract Specification and the same shall be binding to both the Contractor and the Purchaser.

26.2 The Contractor shall attain "Time for completion" of the Project in [●] months from the Effective Date of the Contract.

26.3 "Time for Completion" indicated above is based on the assumption that the Site will be handed over to the Contractor free of obstacles and all other preconditions for installation of the material delivered are fully met. .

27.0 DELIVERY TIME, DELAYS AND EXTENSION OF TIME

27.1 A detailed schedule showing the start and finish of all phases and items of the work, as well as dates for delivery of materials and equipment and submission of drawings, shall be part of this Contract. This schedule shall show the time required for engineering, procurement and fabrication, as well as installation where applicable and subject to acts of God or Force Majeure or change in scope of Work shall be scrupulously adhered to by the Contractor.

27.2 In the event of any delay arising in any phase of the Contractor's work, the Contractor shall promptly inform the Purchaser and Engineer of the expected delay giving reasons thereof and requesting an extension of time. It shall be the Contractor's constant endeavor thereafter to act swiftly and make up for the delay to ensure that deliveries are made in time as far as possible.

27.3 An extension of time will normally be granted by the Purchaser, if he is satisfied that the delay

© 2022 MECON LIMITED. All rights reserved

arose out of reasons beyond the Contractor's control and for the following reasons:

a) any change in the Work as may be required and solely attributable to the Purchaser;
b) any occurrence of Force Majeure as provided in Clause 35 (Force Majeure) hereof;
c) any suspension order given by the Purchaser for reasons solely attributable to the Purchaser;
d) The default by the Purchaser under the Contract hereof, if proved to be cause for delay in completion of the Work by such period as shall be fair and reasonable in all the circumstances and as shall fairly reflect the delay or impediment sustained by the Contractor.

Should it appear, however, that the delay has been caused by factors within the control of the Contractor, the Purchaser may grant extension reserving its right to recover the amount of Liquidated Damages, but not by way of penalty, from the Contractor for such delayed **delivery** at 1% of Contract price including taxes, duties, levies, cess, etc. per completed week of delay or part thereof up to a maximum of 10% of the Contract Price including taxes, duties, levies, cess, etc. The payment or recovery of such damages shall not relieve the Contractor from his obligations to complete the Work or from any of his other obligations and liabilities under the Contract and the Purchaser shall also reserve to exercise any other right available under the Contract and under the applicable laws.

In case the Contractor is a Consortium, the Purchaser shall recover the amount of Liquidated Damages, but not by way of Penalty, by making deduction from the account of the each members of the Consortium, at 1% of Contract price including taxes, duties, levies, cess, etc. per completed week of delay or part thereof up to a maximum of 10% of the Contract Price including taxes, duties, levies, cess, etc.

28.0 PROGRESS REPORTS

28.1 The Contractor shall submit to the Purchaser monthly progress reports on or about the 20th day of every month, giving the status of the Work along with adequate number of photographs, indicating the stages of implementation of the Work.

28.2 For this purpose, the Contractor's work shall be sub-divided and numbered consequently into major categories and arranged in such a manner as to describe the normal sequence of the Work. Progress shall be reported by these major categories in all reports, preferably with Critical Path Network diagram and a contract completion bar chart showing the starting and completion date of all major categories for engineering, purchasing, procurement of raw materials, manufacture, inspection and dispatch along with the percentage completion of each of the above.

28.3 The progress report shall include a drawings status report, containing a listing of all drawings required for the due performance of the Contract and documents as detailed in Clause 17.14

© 2022 MECON LIMITED. All rights reserved

together with the related reference number and titles and giving the scheduled completion dates, dates when the drawings and documents have been / will be submitted and date of receipt of approval, etc.

28.4 The progress reports shall also include a manufacturing status report detailing the progress of procurement of raw materials, manufacture, when the particular item or sub-assembly is expected to be ready for inspection, status of inspection, delivery, etc. both for the Contractors work and those of his Sub-Contractors.

28.5 The proforma for the above progress reports will be indicated by the Purchaser. The Contractor shall submit two (2) copies of such reports, including photographs to the Purchaser. The Purchaser will have the right to depute its representatives to ascertain the progress of work at the premises or works of the Contractor or of any Sub-Contractor.

28.6 The submission, receipt and acceptance of such progress reports shall not prejudice the rights of the Purchaser under the Contract, nor shall operate as an estoppel against the Purchaser merely by the reason of the fact that he has not taken notice of or subjected to test any Information contained in such reports.

29.0 DEPUTATION OF EXPERTS BY THE CONTRACTOR

29.1 The Contractor shall depute at Site it's foreign as well as India Experts from various disciplines for Installation, trial run, and commissioning and performance guarantee tests of the plant, machinery and equipment.

29.2 The experts shall undertake Installation, commissioning and conducting of performance guarantee tests of the plant, machinery and equipment with its auxiliaries as contracted herein so as to establish to the Purchaser that the guarantees as agreed by the Contractor in accordance with the Technical Specification are fully met and complied with.

29.3 The Contractor shall bear and pay all the cost / expenses for deputation of experts required including all costs / expenses towards remuneration, air travels from their country to India / at Site and back to their country, surface travel, local transport, accommodation, food &incidentals, communication system, medical, insurance, personal Indian Income Tax, etc. These experts should neither be treated as employees nor the agents of the Purchaser and the Contractor shall be liable for all the acts and omissions of the experts and the Contractor agrees to indemnify and hold harmless the Purchaser at all times for acts, deeds and omissions of the experts under the Contract.

© 2022 MECON LIMITED. All rights reserved

30.0 SUPERVISION OF ERECTION, START-UP & COMMISSIONING AND COMPLETE INSTALLATION, ERECTION, START-UP AND PUTTING INTO COMMISSION

30.1 Supervision of Erection, Start-up & Commissioning:

30.1.1 When the Contractor requires the Contractor to provide services for the supervision of erection, start-up and putting into commission, the conditions outlined in this article will apply.

30.1.2 The Contractor shall however be solely responsible for the supervision of the work from the commencement of erection up to the demonstration of the performance guarantee of the plant and equipment supplied under the Contract. The responsibilities of Contractor shall include but not be limited to the following:

(i). Ensuring the correctness of materials and equipment shipped in the order in which they will be required for erection.
(ii). Advising on the safe handling of cargo at the unloading port and site storage for all materials and equipment.
(iii). Ensuring correctness of erection of all plant and equipment supplied by the Contractor.
(iv). Ensuring that adequate quantities of the correct commissioning spare and supplied are at site for the purposes of start-up.
(v). Starting up and operating the plant to meet the specified performance guarantees.
(vi). Handing over the plant to the Purchaser on the issue of the Provisional Acceptance Certificate.
(vii). Advising on any matter pertaining to the erection and start-up on request by the Purchaser or Engineer.

30.1.3 In order to carry out his responsibilities under this section, the Contractor shall send the number experienced personnel to take up residence as site as established in the Contract. The erection and start-up schedule and the details of the strength and calibre of the resident staff the Contractor will be required to maintain at site shall be indicated in the tender by the Contractor and finalized between the Purchaser and the Contractor before the award of the contract. No resident staff shall be sent to Site until permission to do so is received from the Purchaser.

30.1.4 At any time during the erection period the Purchaser shall have the right to ask the Contractor to temporarily withdraw his Site staff or reduce the strength of the staff in order to keep pace with the erection programme or for any reason whatsoever at its sole discretion. In such case, the Purchaser will bear the air economy class/ first class train travelling and out-of-pocket expenses for the return trip of the personnel involved

© 2022 MECON LIMITED. All rights reserved

between the Site and the city of origin by the shortest route. The Purchaser will give the Contractor two (2) weeks' notice prior to requesting the temporary withdrawal of the Contractor's personnel.

30.1.5 The Contractor shall ensure that each individual of the Contractor's personnel resident at the Site shall cooperate with the personnel of the Purchaser. And any and all other contractors engaged in work in or around the job site, in order to avoid difficulties in carrying out work. Failure to accomplish this cooperation shall be just cause for the removal of such individual and his replacement by suitable other personnel by the Contractor at his expenses forthwith upon request by the Purchaser. In case of disagreement as to the cause for such removal and replacement, the decision of the Purchaser shall be final and binding.

30.1.6 On completion of the erection work and connecting up of the electrical power supply and utilities, the Contractor shall promptly notify the Purchaser of the proposed date of the commencement of Start-up operations. The duration of the Start-up period shall be established in a scheduled which shall be part of the Contract. The Purchaser will provide labour, powers, fuel, utilities and supplies for operating the plant during the start-up period when the plant will be operated under the supervision of the Contractor.

30.1.7 Should the start-up period extend beyond the scheduled period due to either difficulties encountered with the Contractor's plant and equipment or inadequacy of the Contractor's staff, the Purchaser shall have the right to charge such amount as may be deemed reasonable by him for the material and services provided by the Purchaser as mentioned in Clause 30.1.6 above for the extended period.

30.2 Complete Installation, Erection, Start-up and Putting into Commission:

30.2.1 When the Contract requires the Contractor to undertake complete Installation of the plant, machinery and equipment, start-up and putting into commission, the conditions stated in this Clause will apply in conjunction with the other clause in so far as they are applicable.

30.2.2 Except otherwise expressly provided herein the responsibilities of the Contractor shall include but not be limited to, the following:

i. Ensuring the correctness of material and equipment are shipped in the order in which they will be required for Installation.

ii. Taking delivery of equipment from the Purchaser's store at site and moving into the Contractor's storage and / or installation Site.

© 2022 MECON LIMITED. All rights reserved

iii. Opening of crates and packing cases, inspection and checking of equipment / materials.

iv. Repairing and replacement of equipment / materials damaged or lost in transit or at Site and in filling and processing of insurance claims for damaged / loss of equipment / materials.

v. Ensuring that adequate quantities of correct commissioning spares and supplies are available at Site for the purpose of the start-up of the plant, machinery and equipment.

vi. Making arrangements to draw electricity and water to the installation Site from selected locations at site (to be within 300 m from the installation Site) where electricity and power shall be provided by the Purchaser, at such terms and conditions as stipulated in the Contract free of cost to the Contractor.

vii. Checking foundations as constructed, including final adjustment of foundation levels by chipping and dressing, checking location, elevations etc., for anchor Bolts and carrying out minor civil works as may be required in connection with the installation work.

viii. Complete installation of all materials and equipment supplied by the Contractor or his Sub-Contractor. This shall include the complete installation of equipment. Piping, hangers, structures etc. supplied under the Contract, including aligning, lining and levelling and connecting up electric power supply water and utilities, applying, including touching up, of approved final painting to all equipment, piping, hangers, structures etc. as supplied under the Contract.

ix. Starting up and commissioning the plant, machinery and equipment to meet specified performance guarantees and handing over the plant to the Purchaser on issue of the provisional acceptance certificate.

x. Providing all consumable, materials and stores required for the commissioning and installation work and for performance guarantee test, unless otherwise provided in the Contract, for due performance of the Contract.

xi. Providing all ladders, platforms, temporary supports and other necessary facilities required for the handling and installation of the equipment supplied under the Contract.

© 2022 MECON LIMITED. All rights reserved

xii. Unless otherwise provided in the Contract, providing all construction / installation equipment welding equipment, installation and lifting tools and tackles, instruments and appliances required for the installation work, as well as equipment tools and tackles for the transportation to Site of installation of all equipment, supplied under the Contract.

xiii. Providing necessary supervisory and advisory personnel, staff, skilled and unskilled labour, including electrical personnel with approved license as per Indian Electricity Rule 1956as amended from time to time, to ensure that the whole of the installation work is completed in all respects within the period specified in the Contract. The Contractor shall ensure when local laws require, the concerned employees obtain and hold certificates of competency for their work from the competent authority.

30.2.3 The Contractor shall be responsible for protection and / or diversion of underground and all existing over ground services indicated in the drawing made available to the Contractor and form part of Contract Specification.

30.2.4 On the completion of the installation work and connecting up of electric power supply, water and utilities, the Contractor shall promptly notify the Purchaser and Engineer of the proposed date of the commencement of the start-up operations. The duration of the start-up and commissioning period shall be established in a schedule which shall be part of the Contract. The Purchaser will provide facilities, such as skilled & unskilled manpower, input/ raw materials, fuel, power, water and utilities to the Contractor as required for operating the equipment during such period, and during this period the equipment shall be operated under the supervision of the Contractor.

30.2.5 Should the erection and installation or the start up and commissioning of the Plant and equipment extend beyond the scheduled period due to difficulties encountered with the equipment supplied under the Contract or due to inadequacy of the Contractor's staff or due to incorrectness in erection work or due to any other reason for which the Contractor is responsible, the Purchaser will have the right to realize such amount from the Contractor as may be deemed reasonable by the Purchaser for the extended period.

31.0 PERFORMANCE GUARANTEE TESTS AND PROVISIONAL ACCEPTENCE

31.1 The Contractor shall be responsible for carrying out performance guarantee tests as per the Contract Specification in the presence of the Purchaser on all plant, machinery and equipment supplied by him. This responsibility shall rest with the Contractor regardless of whether the erection has been carried out by him or any other agency.

© 2022 MECON LIMITED. All rights reserved

31.2 On the completion of a satisfactory start-up and commissioning operation, the Contractor shall notify the Purchaser in writing of the proposed date of the commencement of the performance tests. A detailed procedural protocol shall be prepared by the Contractor to this effect, which shall be discussed and agreed upon and provided to the Purchaser. Every item of plant, machinery and equipment, as well as the plant machinery and equipment as a whole, supplied by the Contractor shall undergo a performance test unless otherwise decided by the Purchaser. The duration of the performance tests shall be as provided in the Contract Specification. The man power utilization for carrying out the performance guarantee test by the Contractor shall not be more than the strength of normal operation recommended by the Contractor and accepted by the Purchaser.

31.3 During the performance test the plant, machinery and equipment will be operated by the Purchaser under the supervision of the Contractor. The Contractor shall provide adequate engineers/specialists and commissioning spares for smooth conducting of the performance guarantee test. Unless otherwise agreed to in the Contract, the Purchaser will provide necessary input material, skilled and unskilled labour, fuel, power, utilities and other relevant supplies.

31.4 Should the operation of the plant, machinery and equipment during the performance test be interrupted then the performance test shall be re-started and run again for the period as specified in the Contract. The Purchaser may at his discretion permit the period of test run prior to the interruption to be reckoned as part of the above mentioned period, in which case the test will be run for the duration of the balance period on re-commencement.

31.5 The Purchaser will have the right to charge such amounts as may be deemed reasonable for materials and services provided by the Purchaser, in case performance tests continue for an unreasonably long period due to interruption as defined in Clause 31.4 above. The Purchaser shall charge the Contractor on actuals.

31.6 The plant, machinery and equipment shall be considered to have concluded the performance test satisfactorily if, during the entire duration of the test, save as expected in Clause 31.4 above, the plant, machinery and equipment shall have delivered the guaranteed specified output or operated at the guaranteed specified capacity utilizing the quantity and quality of raw materials, utilities, fuel and supplies as specified in the Contract Specification.

31.7 On the satisfactory completion of the performance guarantee test, the Purchaser will issue a Provisional Acceptance Certificate provided the Contractor undertake to rectify all defects which do not influence normal operation but which are nevertheless present in the plant and which are indicated in writing by the Purchaser.

31.8 Normally, the entire plant, machinery and equipment will have to satisfactorily complete the performance test before the issue of the Provisional Acceptance Certificate. In special circumstances and at the Purchaser's sole discretion, the Provisional Acceptance Certificate may

© 2022 MECON LIMITED. All rights reserved

be issued for a part of the plant, machinery and equipment.

31.9 The date of completion of performance guarantee test shall be considered to be the date of the PAC, and the plant, machinery & equipment is ready for commencement of commercial production.

32.0 DEFECT LIABILITY PERIOD AND FINAL ACCEPTENCE

32.1 The defect liability or guarantee period shall be as stated in Clause 32.2 and after satisfactory completion of guarantee period the Purchaser will issue the Contractor a Final Acceptance Certificate (FAC). During the guarantee period the plant, machinery and equipment will be operated by and under the supervision of the Purchaser according to instruction issued by the Contractor but the plant, machinery and equipment will not be deemed to have been formally taken over by the Purchaser. On the satisfactory completion of the guarantee period and issuance of the FAC, the Contractor shall be relieved of its contractual obligations under the Contract and the Contractor shall be entitled to receive the agreed payment towards FAC.

32.2 The Contractor shall warrant that the facilities or any part thereof shall be free from defects in the design, engineering, materials and workmanship of the plant, machinery and equipment and structures and refractories supplied and of the work executed for twelve (12) months from the date of issue of Provisional Acceptance Certificate.

32.3 The Purchaser shall give the Contractor a notice stating the nature of any such defect together with all available evidence thereof, promptly following the discovery thereof. The Purchaser shall afford all reasonable opportunity for the Contractor to inspect the defect.

32.4 The Purchaser shall afford the Contractor all necessary access to the Work and the Site to enable the Contractor to perform his obligations. The Contractor may, with the consent of the Purchaser and after submission of Bank Guarantee for the equivalent cost of plant, machinery and equipment, remove from the Site any plant, machinery and equipment or any part of the Works that are defective if the nature of the defect, and / or any damage to the plant, machinery and equipment caused by the defect, is such that repairs cannot be expeditiously carried out at the Site. In case defective parts are not repairable at Site but it is essential in the mean time for the commercial use of plant, the Contractor shall replace at Site free of cost to the Purchaser, the defective parts, before the defective parts are removed from the Site.

32.5 If the repair, replacement or making good is of such a character that it may affect the efficiency of the plant, machinery and equipment or any part thereof, the Purchaser may give to the Contractor a notice requiring that tests of the defective part of the plant, machinery and equipment shall be made by the Contractor immediately upon completion of such remedial work, whereupon the Contractor shall carry out such tests.

© 2022 MECON LIMITED. All rights reserved

32.6 If such part fails the tests, the Contractor shall carry out further repair, replacement or making good (as the case may be) until that part of the plant, machinery and equipment passes such tests. The Purchaser and the Contractor shall agree upon the tests. If the Contractor does not commence the rectification either by repair or replacement of such defects within 30 (thirty) days from the date of notice by the Purchaser or does not complete the rectification with reasonable diligence and within a reasonable time, the Purchaser may, at its option, rectify the defects at the Contractor's expense. The Purchaser shall, in such case, deduct from payment due to the Contractor the expenses incurred by the Purchaser for remedy of such defects without prejudice to the other rights of the Purchaser under the Contract and under the applicable laws.

32.7 If the Contractor fails to commence the work necessary to remedy such defect of any damage to the plant, machinery and equipment caused by such defect within a reasonable time, which shall in no event considered to be less than 15 (fifteen) days, the Purchaser may, following notice to the Contractor, proceed to do such work, and the costs incurred by the Purchaser in connection therewith shall be paid to the Purchaser by the Contractor or may be deducted by the Purchaser from any money due to the Contractor or claimed under the performance Bank Guarantee.

32.8 If the plant, machinery and equipment or any part thereof cannot be used by reason of such defect and for making good of such defect, the Defect Liability Period of the plant, machinery and equipment or such part, as the case may be, shall be extended by a period equal to the period during which the Facilities or such part cannot be used by the Purchaser because of any of the aforesaid reasons.

32.9 Except as provided in the Contract, in the event of loss of or damage to property / accident or injury to workers / indemnification, hereof, the Contractor shall be under no liability whatsoever and howsoever arising, in respect of defects in the plant, machinery and equipment, design or engineering or work executed that appear after completion of the project or any part thereof, except where such defects are the result of the negligence, fraud, criminal or willful action of the Contractor.

32.10 In addition, the Contractor shall also provide an extended warranty for any repaired or replaced component of the plant, machinery and equipment for a period of minimum twelve (12) months from the date of repair / replacement.

33.0 CHANGES IN THE WORK

33.1 The Purchaser shall have the right to propose and / or consider Contractor's proposal, and subsequently order the Contractor from time to time during the performance of the Contract to make any changes, modification, addition or deletion to, in or from the Plant, Machinery & Equipment (hereinafter called "Change"), provided that such Change falls within the general

© 2022 MECON LIMITED. All rights reserved

scope of the plant, machinery and equipment and does not constitute unrelated work and that it is technically practicable, taking into account both the state of advancement of the Plant, Machinery & Equipment and the technical compatibility of Change envisaged with the nature of Plant, Machinery & Equipment as specified in the Contract.

33.2 If the Purchaser proposes and / or considers Contractor's proposal for a Change pursuant to Clause 33.1 hereof, it shall send to the Contractor a "Change Request" requiring the Contractor to prepare and furnish to the Purchaser as soon as reasonably practicable a "Change Proposal" which shall include the following-

a) Brief description of the Change
b) Effect on the Time for Completion
c) Estimated cost of the Change
d) Effect on functional Guarantees (if any)
e) Effect on any other provisions of the Contract

33.3 The pricing of the Change Proposal shall, as far as practicable, be calculated in accordance with the rates and prices included in the Contract. If such rates and prices are inequitable, the parties thereto shall agree on specific rate for the valuation of the Change.

33.4 On receipt of the Change Proposal, Purchaser and the Contractor shall mutually agree upon all matters therein contained. Within Thirty Days after such agreement, the Purchaser shall, if it intends to proceed with the Change, issue the Contractor a Change Order.

33.5 If the Purchaser decides not to proceed with the Change for whatever reason, it shall, within the period of Thirty Days, notify the Contractor accordingly.

34.0 OWNERSHIP OF DRAWINGS AND SPECIFICATIONS

34.1 All drawings, specifications, materials and design furnished by the Purchaser, Engineer, or their representatives shall be treated as the strictly confidential property of the Purchaser. All such drawings, specifications, manuals and other materials shall be returned to the Purchaser upon the completion of the work under this Contract. No copies, duplications or Photostats shall be retained by the Contractor without the consent of the Purchaser.

34.2 All drawings, specifications, and manuals and all specific designs furnished by or through the Contractor shall be treated as strictly confidential by the Purchaser, his employees and agents and shall be the property of the Purchaser who is entitled to use them for execution of the Contract and operation & maintenance of the plant, machinery and equipment being subject to the Contract.

© 2022 MECON LIMITED. All rights reserved

35.0 FORCE MAJEURE

If at any time during the continuance of this Contract, the performance in whole or in part, neither party shall be liable of performance under this Contract, any obligations under the Contract of any party is prevented or delayed due to reasons beyond such party's control, including but not limited to acts of God, fire, flood, earthquake other natural catastrophes, any law, order, regulation, direction, action of any civil or military authority, national emergencies, insurrections, riots, war (whether declared or not), hostility, acts of the public or enemy, PANDEMIC, civil commotion, sabotage, explosion epidemic, quarantine restrictions, strikes and lock-outs, work stoppage or other labour difficulties, absence of the usual means of communication or transportation (hereinafter referred to as `eventuality`) provided however the party to which the force majeure has happened shall use commercially reasonable efforts to eliminate such an event.

Force majeure shall also be deemed in the event of any regulatory decision or government order requiring the either party to suspend its service(s) or operation(s) for any reasons whatsoever.

Notice of the happening of any such eventuality or force majeure as mentioned herein shall be given by either party to the other within fifteen (15) days from the date of the occurrence thereof along with supporting proof of the occurrence of the Force Majeure event , neither party shall, by reason of such eventuality, be entitled to terminate this Contract, nor shall either party have any claim for damages against the other in respect of such non-performance, or delay in performance, and the work under this Contract shall be resumed as soon as practicable after such eventuality has come to an end or ceased to exist, and the decision of the Purchaser as to whether the work has been so resumed shall be final and conclusive. Certificate of a Chamber of Commerce (Commerce and Industry) or other competent authority or organization of respective country shall be a sufficient proof of commencement and cessation of the above circumstances.

The party who has given such notice shall be excused from the performance or punctual performance of its obligations under the Contract for so long as the relevant event of Force Majeure continues and to the extent that such party's performance it prevented, hindered or delayed. The time for completion shall be extended by number of days the party giving notice was prevented from performing his obligation due to Force Majeure, in accordance with Clause 27 hereof.

Should one or both parties be prevented from fulfilling their contractual obligations by a state of force majeure lasting continuously for a period of at least six (6) months, both the parties shall consult each other regarding the further implementation of the Contract, provided always that, if no mutually agreed arrangement is arrived at within a period within three (3) months from the expiry of the six (6) months referred to above, the Contract shall be deemed to have expired at the end of the said six (6) months referred to above. The above mentioned expiry of the Contract will

© 2022 MECON LIMITED. All rights reserved

imply that both the parties have the obligation to reach an agreement regarding the winding up and financial settlement of the Contract.

36.0 TEMPORARY SUSPENSION

36.1 Temporary Suspension during manufacture and Installation

36.1.1 The Purchaser may at any time temporarily stop the work being performed under the Contract or any part thereof by notice in writing to the Contractor specifying the reasons and approximate period of such suspension. All work so stopped shall be resumed by the Contractor based on a schedule to be mutually agreed upon between the Purchaser and the Contractor. Total cumulative period of such temporary suspension shall not exceed a period of six (6) months. However, if the period of temporary suspension exceeds six (6) months, the Parties shall mutually agree on the further course of action.

36.1.2 The Purchaser will not pay the Contractor for any work which is performed during such an interval of suspension, and the Purchaser shall not be liable to the Contractor for any damages or loss caused by such a suspension of work. However, the reasonable cost of necessary preservation of specific items, storage, watch & ward, withdrawal and re-deputation, etc, which is required during such suspension period, not for reasons attributable to the Contractor, to ensure proper resumption of work shall be mutually agreed between the Purchaser and the Contractor and shall be borne and paid by the Purchaser.

If the aggregate duration of the suspensions of the Contract for reasons not due to Contractor's default exceeds six (6) months on account of one or more periods of suspension, then the Parties shall mutually agree on the further course of action. In the event of termination of the Contract for reasons of suspension solely attributable to the Purchaser the documented costs incurred by the Contractor and if agreed by the Purchaser, in performing the portion of the scope of supply prior to termination incurred for the execution and/or by the Contractor prior to the date of termination shall be paid by the Purchaser.

The extra/additional cost (if any) incurred by the Contractor in giving effect to the Purchaser's order under this Clause shall be borne by the Purchaser unless such suspension is (i) otherwise provided for in the Contract; (ii) necessary for proper execution of the work or by reason of weather or other force majeure conditions or by some default on the part of the Contractor; (iii) necessary for safety works or part thereof, provided the Contractor shall not be entitled to recover any such extra cost unless he gives notice in writing of his intention to claim to the Purchaser with 30 days of the purchaser's order. The Purchaser shall settle and determine the extra payment to be made to the Contractor in respect of such claims as the Purchaser/Engineer shall consider fair

© 2022 MECON LIMITED. All rights reserved

and reasonable.

37.0 PATENT INFRINGEMENT AND INDEMNITY

37.1 Patent Infringement

37.1.1 The Contractor shall at all times protect, indemnify and save/ keep harmless the Purchaser, its successors, assigns, , any claim made by a third party against all liability, including costs, expenses, claims, suits or proceedings at law, in equity or otherwise, arising out of, or in connection with, any actual or alleged patent infringement (including process patents, if any), or violation of any license with respect thereto, by reason of the manufacture and/or sale by, or on behalf of, the Contractor of the plant or any part thereof, or the purchase thereof by the Purchaser or the use thereof in India for the purchase for which it is furnished, or the sale by the Purchaser, its successors or assigns or products made, manufactured, fabricated, processed or produced with the said plant or any part thereof, and will defend or settle at the Contractor's own expense, any such claims, suits, or proceedings.

37.1.2 The Purchaser will promptly notify the Contractor in writing of any such claim, suit, action or proceeding coming to its attention, giving authority and all available information and assistance for the Contractor's defense of the same. If at any time the installation of the plant, or any part thereof or the use thereof in India for the purpose for which it is furnished, or the sale of products produced therewith, is prevented or enjoined because of patent infringement or claimed infringement, the Contractor shall promptly at his own expense, either procure for the Purchaser the right to use and continue to use such plant or replace the same at his own expense with equally efficient non-infringing plant satisfactory under all requirements of the Contract, so that the operation of the Purchaser's plant will not be unduly delayed or interrupted. If shipment of the plant, or any part thereof is prevented by attachment, injunction or otherwise at, or in the course of transit from, the Contractor's factory or other point of origin to the site of the Purchaser's plant, as a result of any claim of Patent infringement, the Contractor shall, at his own cost and expense, promptly furnish and post the necessary bond or take such other steps as may be necessary to enable shipment to be made without delay. The Purchaser will have the right at its own expense to retain counsel of its own choice to collaborate in the defense of any such claim, suit action on proceeding.

37.2 Indemnity

The Contractor assumes responsibility for, and shall at all times indemnify and save harmless the Purchaser, the Engineer, or their officers or employees from all losses, liability, claims, costs, expenses, taxes and assessments, including penalties, punitive damages, attorney's fees and court costs which are, or may be, required with respect to any breach of the Contractor's obligations

© 2022 MECON LIMITED. All rights reserved

under this Contract, or for which the Contractor has assumed responsibility under this Contract, including those imposed under any contract, local or national law or laws, or in respect to all salaries, wages, or the compensation of all persons employed by the Contractor or his Sub-Contractors or suppliers in connection with the performance of any work covered by the Contract. The Contractor shall execute and deliver and shall cause his subcontractors and suppliers to execute and deliver such other further instruments and to comply with such requirements of such laws, and regulations as may be necessary there under to confirm and effectuate this Contract and to protect the Purchaser, Engineer, or their officers or employees. The Purchaser shall not be in any way responsible for any accident or damages incurred or claims arising there from during the period of Erection, Installation and putting into operation and commissioning of the plant, machinery and equipment under the responsibility and supervision of the Contractor.

38.0 ENVIRONMENT

38.1 The Contractor shall take all reasonable steps to protect the environment (both on and off the Site) and to avoid injury, damage and nuisance to people and property resulting from pollution, noise and other results of his operations. The Contractor shall ensure that air emission, surface discharges and effluent from the Site during the Contract period shall not exceed the values indicated in the Purchaser's requirements, and shall not exceed the values prescribed by law. The Contractor shall conform to the Purchaser's requirements and shall indemnify the Purchaser against any liability or damages or claims arising out of his operations.

38.2 The Contractor shall abide by the following environment, safety and health policy of the Purchaser.

a) The Contractor must adhere to all the applicable statutory laws pertaining to safety, health and environment.

b) The Contractor must ensure that there is no wastage of water at the Work Site. The Contractor must also ensure that all the water tapping points are leak proof.

c) All the motor vehicles of the Contractor used for transporting materials/machinery etc. should have pollution control certificates and the same should be submitted at the time of obtaining gate passes. A copy of the same must be exhibited/pasted on the vehicle also.

d) The Contractor must ensure dust suppression measures in the work areas by sprinkling of water etc. and also ensure that all his workers use dust masks while working in dusty areas.

e) The Contractor must ensure proper housekeeping at site by keeping the work areas free from unwanted material and greases, oil to avoid slips & falls.

f) The Contractor must ensure that all the debris generated during the work is transported safely to dump yard such that there is no spillage of debris on the road during transportation (by covering with a plastic sheet/tarpaulin)

g) All the garbage collected from, dust bins etc. should be transported in covered vehicles.

h) All the material which may be recycled / reused should be transported to the designated

© 2022 MECON LIMITED. All rights reserved

place for reuse/recycling.

i) All the cut jungle growth and trees should be disposed at the dumping yard without open air burning.

j) The Contractor must ensure that there is no spillage of oil or paints on the floors/grounds etc.

k) All representatives/supervisors/workers of contractors must take safety and environmental induction training and comply with the instructions given therein.

39.0 REMEDIES OF PURCHASER

39.1 All costs or expenses for which the Contractor may become liable to the Purchaser under the Contract will be recovered from any invoice of the Contractor after informing the Contractor .If no amount is due to the Contractor such amount will be billed with evidence by the Purchaser to the Contractor. The Contractor shall pay the bills within sixty (60) days after receipt or advice the Purchaser of any objections within fifteen (15) days.

39.2 Failure of either party to insist upon strict performance of any of the terms and conditions of the Contract will not be deemed as a waiver of any rights or remedies that the said party may have and will not be deemed as a waiver of any subsequent default under the terms and conditions of the Contract. No right or remedy of the either party will be exclusive of any other right or remedy and the said party will have all rights and remedies given under the Contract and now or hereafter existing in law or by statute. The shipping or delivery by the Contractor or receiving of the payment by from the Purchaser for the plant, machinery and equipment under this Contract will not be deemed a waiver of any rights for any prior failure by the Contractor to comply with any of the provisions of the Contract.

39.3 All costs, charges damages or expenses which the Purchaser may have paid, for which under the Contract, the Contractor is liable, may be deducted, by the Purchaser from any money due or becoming due by him to the Contractor under the contract, or may be recovered by action of law or otherwise from the Contractor.

40.0 ARBITRATION

40.1 Any dispute(s) or difference(s) whatsoever arises under or out of or in connection with this Contract, or in respect of any defined legal relationship associated therewith or derived therefrom, the parties agree resolve/settle the same by submitting that dispute to arbitration in accordance with the International Centre for Alternative Dispute Resolution (ICADR) Arbitration Rules 1996.

The authority to appoint the arbitrator(s) shall be the International Centre for Alternative Dispute Resolution (ICADR).

© 2022 MECON LIMITED. All rights reserved

The international center for alternative dispute resolution will provide administrative services in accordance with ICADR Arbitration Rules 1996

The language of the arbitration proceeding shall be English

The place of arbitration proceedings shall be Telangana, India.

Note: In respect of PSUs/Government organizations, the DPE guidelines shall be applicable.

Work under the contract shall be continued by the contractor during the arbitration proceedings, unless otherwise directed in writing by the Purchaser or unless the matter is such that the work cannot possibly be continued until the decision of the arbitrators is obtained, and save as those which are otherwise expressly provided in the Contract, no payment due or payable by the purchaser shall be withheld on account of such arbitration proceedings, unless it is the subject matter or one of the subject matter thereof.

40.2 Work under the Contract shall be continued by the Contractor during the arbitration proceeding, unless otherwise directed in writing by the Purchaser or unless the matter is such that the work cannot possibly be continued until the decision of the arbitrators is obtained, and save as those which are otherwise expressly provided in the Contract, no payment due or payable by the Purchaser shall be withheld on account of such arbitration proceedings, unless it is the subject matter or one of the subject matters thereof.

41.0 ADDITIONAL CONDITIONS FOR COMPLETE ERECTION OF EQUIPMENT

41.1 When the Contract requires the Contractor to undertake complete erection of plant, machinery and equipment start-up and putting into commission, the following conditions will apply, in conjunction with other clauses of the conditions of contract as stated hereinbefore in so far as they are applicable.

(i) The Contractor shall be solely responsible for the satisfactory Installation, start-up and commissioning of the plant, machinery and equipment supplied under the Contract, including demonstration of performance guarantees notwithstanding that the Contractor may have been assisted by the Purchaser or his authorized representative in doing so.

(ii) If the Contractor performs any work in a manner contrary to the Contract without the written approval of the Engineer/Purchaser, the Contractor shall bear all the costs arising there from and shall be responsible for all the losses to the Purchaser arising there from.

© 2022 MECON LIMITED. All rights reserved

41.1 Installation

Installation and erection work shall be carried out by the Contractor in the presence and under the general supervision and to the satisfaction of the Engineer/Purchaser. The Contractor shall receive instructions and directions from the Engineer/Purchaser in connection with the Work and shall strictly abide by the same, within the preview of the Contract. If the Contractor performs any work in a manner contrary to the Contract without the written approval of the Engineer/Purchaser, the Contractor shall bear all the costs arising therefrom and shall be responsible for all the damages and direct losses to the Purchaser arising therefrom.

41.2 Facility to Purchaser's Engineers

The Contractor shall provide every reasonable facility and opportunity to the Purchaser's engineers and personnel as required by the Purchaser to become familiar with the Installation, erection, operation and maintenance of the equipment supplied under the Contract.

41.3 Programme and Particulars of work and Progress Reports

41.3.1 The Contractor shall submit to the Purchaser for his approval before the commencement of erection work and subsequently, at such times as may be required by the Purchaser, the programme and order in which the Contractor proposes to carry out the work, with the date and completion times for various parts and phases of the work, including particulars regarding the Contractor's arrangements for carrying out the work and of the erection and transportation equipment and tools and category wise staff and labour which the Contractor shall engage on the work, such programmes shall be within the overall time schedule of completion of erection of equipment as specified in the contract. The submission to and approval by, the Purchaser of such programme or the furnishing of such particulars shall not relieve the Contractor of any of his duties or responsibilities under the Contract.

41.3.2 During the progress of the Work, the Contractor shall submit to the Engineer monthly progress reports and such other reports on the Installation work and the Contractor's field organization as may be required by the Engineer.

41.4 Contractor's Agent and Personnel

41.4.1 In order to carry out responsibilities under this section, the Contractor shall employ one competent agent, whose name shall be previously communicated in writing by the Contractor to the Purchaser, to superintend the Installation work. The said agent shall be constantly present at Site during working hours and during the extended period so granted to carry out the Installation work and any instructions given to the said agent by the Purchaser and / or Engineer shall be deemed to have been given to the Contractor.

© 2022 MECON LIMITED. All rights reserved

41.4.2 The Contractor shall ensure that his agent and every other personnel employed by him at Site shall co-operate with any and all others agencies engaged in the Site. Failure to extend such co-operation or misconduct or incompetence or negligence by any individual including the agent, shall be sufficient cause for removal from the Site of such individual by the Contractor and the Contractor shall remove such individual forthwith from the Site, if required by the Purchaser. In such cases, the Contractor shall provide immediately competent personnel to replace such individual.

41.5 Working Hours

A normal working day shall mean eight hours of work. There shall be six (6) working days in a week. No work during Sundays and other locally recognized holidays and during night shall be carried out by the Contractor without the written permission of the Engineer. With the exception that, when the carrying out the work is unavoidable or necessary for the saving of life or property or for the safety of the erection work, the Contractor shall carry out such work and shall immediately inform the Purchaser / Engineer to that effect.

41.6 Supply of Installation Equipment, Materials and Labour

Unless otherwise provided in the Contract, the Contractor at his own expenses shall supply all Installation, erection and transportation equipment, tools, materials and labour and all other things of every kind necessary for the due fulfilment of the Contract.

41.7 Delay in Obtaining Materials from Purchaser

If the Purchaser has undertaken to supply any material specified in the Contract at rates and conditions stated therein, the Contractor shall keep himself in touch with the day to day position regarding the supply of materials by the Purchaser and shall so adjust the progress of the Work that his labour may not remain idle nor may there be any other claim due to or arising from delay in obtaining the materials. No claim whatsoever shall be admissible by the Purchaser on account of delay in supplying materials, if any.

41.8 Purchaser's Installation and Transportation Equipment

The Purchaser may at his discretion give on hire to the Contractor installation and/or transportation equipment, if available, for the use of the Contractor (but without prejudice to the Contractor's obligations under Clause 41.8 hereof) during the execution of the work on such terms as may be specified in the Contract or in a separate agreement for Hire of plant. The Contractor shall take all reasonable care of all such equipment belonging to the Purchaser but committed to his charge and shall be responsible for all damage or loss caused to such equipment while they are in his charge. On completion of the Contract or at its termination for any reason whatsoever or at any earlier occasion as required by the Purchaser, the Contractor shall return all

© 2022 MECON LIMITED. All rights reserved

such equipment to the Purchaser in good order and repair, wear and tear expected, and shall be entirely responsible for any failure to account for the same or any damage done thereto.

41.9 Return of Surplus Materials

Notwithstanding anything contained to the contrary anywhere in this Contract, wherever any materials for the execution of the work are procured with the assistance of the Purchaser, either by issue from the Purchaser's stocks or purchase made under orders or permits or license issued by the Purchaser, the Contractor shall use the said materials economically and solely for the purpose of the work and shall not dispose of them without the written permission of the Purchaser and shall return to the Purchaser all such surplus serviceable materials that may be left with the Contractor after the completion of the Contract or at its termination for any reason whatsoever, on being paid for or credited such price as the Purchaser shall determine, having due regard to the initial cost and the condition of the materials at the time of such return thereof. The price to be allowed to the Contractors however shall not exceed the amount charged to him, excluding the storage charge if any. The decision of the Purchaser in this regard shall be final and conclusive. In the event of a breach of the aforesaid condition, the Contractor shall (in addition to making himself liable for action for contravention of the terms of the license or permit and/or for criminal breach of trust) be liable to the Purchaser for payment of double the cost the material not returned as determined by the Purchaser plus all money, advantages of profits resulting or which in the usual course would have resulted to him by reason of such breach.

41.10 Accident or Injury to Workmen

41.10.1 The Contractor shall be solely liable for any accident or injury that may happen to any of his personnel engaged in connection with the installation work according to the Contract within the battery limit. The Purchaser shall not be liable for or in respect of any damage or compensation payable at law in respect of or in consequence of any accident or injury to any personnel in the employment of the Contractor and the Contractor shall indemnify and keep indemnified the Purchaser against all such claims, damages, compensations and proceedings.

41.10.2 The Contractor shall forthwith report to the Engineer all cases of accidents to any of his personnel and shall make every arrangement to render all possible assistance and aid to the victims of the accident.

41.11 Compliance with Statutory and other Regulations

41.11.1 The Contractor shall, in all matters arising in the performance of the Contract, confirm at his own expense with the provisions of all Central or State statutes, ordinances or laws and the rules, regulations, or bye-laws of any local or other duly constituted authority and shall keep the Purchaser indemnified against all penalties and liabilities of every kind for breach of any

© 2022 MECON LIMITED. All rights reserved

such statute, ordinance, law, rule, regulation or bye-law.

41.11.2 The Contractor shall give all notices and pay all fees and taxes required to be given or paid under any Central or State statutes, ordinances or other laws or any regulation or bye-laws of any local or other duly constituted authority in relation to the Installation work except where the Purchaser is statutorily required to obtain such approvals / clearance.

41.12 Payment of Taxes for Foreign Personnel

The Contractor shall pay all taxes due in India in respect of all personnel employed by him for Installation work, including any foreign personnel who are non-residents of India as detailed under the Contract.

41.13 Work Permits, Passports etc.

The Contractor shall be responsible for arranging and obtaining at his own cost the necessary work permits, passports, visas, police permits and expenses for custom's duty related to personal and other effects of any personnel employed by him for Installation work, who are non-residents of India. Purchaser shall make all necessary efforts in order to help the Contractor in doing so.

41.14 Travelling Expenses

All travelling expenses for the Contractor's personnel shall be borne by the Contractor.

41.15 Labour Rules

41.15.1 *Provisions of Contract Labour Act*

In respect of all labour, directly or indirectly, employed by the Contractor for the Installation work, the Contractor shall comply with the provisions of the Contract Labour (Regulation and Abolition) Act, 1970, or any amendment thereof, and all legislations and rules of the State and/or Central Government or other local authority, framed from time to time governing the protection of health, sanitary arrangements, wages, welfare and safety for labour employed on the Installation work. The rules and other statutory obligations with regard to fair wages, welfare and safety measures, maintenance of registers etc., will be deemed to be part of the Contract.

41.15.2 *Provisions of Minimum Wages and Payment of Wages Act*

(i). The Contractor shall comply with the provisions of the Minimum Wages Act, 1948, the Payment of Wages Act, 1936, Provident Fund and Miscellaneous Provisions Act 1972,

© 2022 MECON LIMITED. All rights reserved

Employees State Insurance Act 1948, and any amendment thereof in respect of all employees employed by him for the purpose of carrying out the Installation work.The Contractor shall supply to the Purchaser any labour required to work wholly or partly under the direct order and control of the purchaser, whether in connection with any work being executed by the contractor or otherwise for the purpose of purchaser, and such labour shall for the purpose of this clause still be deemed to be persons employed by the Contractor.

(ii). If any amount shall, as a result of any claim or application made under the said applicable laws, be directed to be paid by the Purchaser, such, amounts shall be deemed to be amounts payable to the Purchaser by the Contractor. On failure by the Contractor to repay the Purchaser, any amounts paid by the Purchaser as aforesaid, within seven (7) days of demand being made from the Contractor, the Purchaser shall be entitled to recover the same from any amounts due or accruing to the Contractor under this or any other contract with the Purchaser.

(iii). In the event of the retrenchment of workers by the Contractor or Sub-Contractors employed by the Contractor during or after the completion of the Work, the retrenchment compensation and other benefits will be paid by the Contractor to the workers as per the Industrial Disputes Act.

41.15.3 *Provisions of Employee Compensation Act*

The Contractor shall at all times indemnify and keep indemnified the Purchaser against all claim for compensation under the provision of the Employee Compensation Act, 1923 or any other law for the time being in force and as amended from time to time, in respect of, any workman employed by the Contractor in carrying out of the Contract and against all costs and expenses or penalties incurred by the Purchaser in connection therewith. In every case in which, by virtue of the provisions of Section 12, sub-section (1) of the Employee Compensation Act, 1923, the Purchaser is obliged to pay compensation to a workman employed by the Contractor in executing the contract the Purchaser shall recover from the Contractor the amount of the compensation so paid and, without prejudice to the rights of the Purchaser under Section 12, sub-section (2) of the said Act, the Purchaser shall be at liberty to recover such amount or any part thereof deducting it from the security deposit or from any sum due by the Purchaser to the Contractor whether under this Contract or otherwise. The Purchaser shall not be bound to contest any claim made against him under Section 12, sub-section (1) of the said Act, except on the written request of the Contractor and upon his giving to the Purchaser full security for all costs for which the Purchaser might become liable in consequence of contesting such claim.

41.15.4 *Accommodation for Contractor's Staff*

No quarters shall normally be provided by the Purchaser for the accommodation of the Contractor or any of his staff employed in connection with the Installation work. In

© 2022 MECON LIMITED. All rights reserved

exceptional cases where accommodation is provided to the Contractor at the Purchaser's discretion, recoveries shall be made at such rates as may be fixed by the Purchaser towards the rent of the building and furniture and fittings, if any, therein, as well as charges for electric current, water supply and conservancy.

41.15.5 *Accommodation for workmen*

The Contractor shall, at his own expense, make adequate arrangement for housing, supply of drinking water and provision of toilets for his staff and labour and disposal of sewerage. Suitable sites on the Purchaser's land, if available, may be allotted to the Contractor for the installation of camp site on such terms and conditions as may be prescribed by the Purchaser. All camp-sites shall be maintained in clean and sanitary condition by the Contractor at his own cost.

The Contractor shall comply with all sanitary rules in force and carry out all sanitary measures and permit inspection of all sanitary arrangement at all reasonable times by the Purchaser. Should the Contractor fail to make adequate sanitary arrangements, these will be provided by the Purchaser and the cost thereof shall be recovered from the Contractor.

41.15.6 *Preservation of Peace*

The Contractor shall take requisite precautions and use his best endeavour to prevent any riotous or unlawful behaviour by or amongst, his workmen and/or others employed by him and for the preservation of peace and protection of the inhabitants and security of property in the neighbourhood of the Site. In the event of the Purchaser requiring the maintenance of a special police force at or in the vicinity of the Site during the tenure of the Contract, in consequence of the riotous or unlawful behaviour by or amongst the Contractor's workmen and/or others employed by him, all expenses thereof and costs of all damages due to such riotous or unlawful behaviour shall be borne by the Contractor, and, if paid by the Purchaser, shall be recoverable from the Contractor from any moneys due or that may become due to the Contractor by the Purchaser. The Contractor also undertakes to indemnify and hold harmless the Purchaser against any claims on such account.

41.15.7 *Infectious Diseases*

The Contractor shall remove from his camp site such labour and their families who refuse protective inoculations and vaccinations when called upon to do so by any competent authority. In the event of any breakout of infectious disease in the camp site, the Contractor undertakes to forthwith provide for all medical facilities and assistance and take all possible steps to prevent spread of such disease and also discard and destroy all belongings of and used materials by the infected parties and promptly arrange new accommodation

© 2022 MECON LIMITED. All rights reserved

in healthy sites as may be required by the labour and employees of the Contractor.

41.15.8 *Medical Facilities at Site& health & safety*

The Contractor shall provide medical facilities at the Site as per rule in force in relation to the strength of the Contractor's staff and workmen. The Contractor shall at all times take all reasonable precaution to maintain the health and safety of its personnel, employees and workmen. The Contractor shall ensure that medical staff, first aid facilities, sick bay and ambulance facilities/services are available at all times at the Site and suitable arrangements are made for all necessary welfare and hygiene requirements and for prevention of epidemics. The Contractor shall also appoint an accident prevention officer at the Site responsible for maintaining safety and protection against accidents.

41.15.9 *Use of Intoxicants*

The sale, use & consumption of alcohol or other intoxicating beverages in the Site or in any of the buildings, encampments or tenements owned, occupied by, or within the control of the Contractor or any of his employees or Sub-Contractors is forbidden, and the Contractor shall secure strict compliance with this condition.

41.15.10 *Age Limits of Labour*

The Contractor shall not employ children below the age of 18 as labourers for the Installation work.

41.15.11 *Observance by Sub-Contractor*

The Contractor shall be responsible for the observance of the provisions of Clauses 41.17.1 to 41.17.11 hereof by any Sub-Contractor(s) employed by him in the execution of the Contract.

41.15.12 *Contractor's personnel*

The Contractor's personnel shall be appropriately qualified, skilled and experienced in their respective trades or occupations. The Engineer/Purchaser may require the Contractor to remove (or cause to be removed) any person employed on the Site or Works, including the Contractor's representative if applicable, who: (i) persists in any misconduct or lack of care, (ii) carries out duties incompletely or negligently, (iii) fails to conform with any provisions of the Contract, or (iv) persists in any conduct which is prejudicial to safety, health, or the protection of the environment. If appropriate, the Contractor shall then appoint (or cause to be appointed) a suitable replacement person.

41.16 Time of Completion for Installation Work and Delays

© 2022 MECON LIMITED. All rights reserved

41.16.1 *Date of Commencement of Installation Work*

The date of commencement for the Installation work shall be reckoned from the dates on which the Contractor is given possession of the Site to commence Installation, which will be intimated to him in writing by the Purchaser and shall be as per the Bar/Pert Chart attached to the Contract Specifications.

41.16.2 *Possession of Site*

In terms of the Contract, the extent of portions of the Site of which the Contractor is to be given possession from time to time and the order in which such portion shall be made available to him, and subject to any requirement in the Contract to the order in which the Installation work shall be executed, the Purchaser will give to the Contractor possession of as much of the Site as may be required to enable the Contractor to commence and proceed with the Installation work. This will be in accordance with the programme referred to in Clause 41.5.1 hereof and otherwise in accordance with such reasonable proposals of the Contractor as he shall give by notice in writing to the Purchaser / Engineer. The Purchaser, will from time to time, as the work proceeds, give to the Contractor possession of such further portions of the Site as may be required to enable the Contractor to proceed with the Installation work, in accordance with the said programme or proposals (as the case may be). If the Contractor suffers delay from failure on the part of the Purchaser to give possession in accordance with the terms of this clause, the Purchaser shall grant an extension of time for the completion of the work. No compensation will be payable by the Purchaser for any such failure and delay.

41.16.3 *Time of Completion for Installation Work*

Time is the essence of the Contract. The whole of the work, including conducting performance tests to demonstrate performance guarantees according to the Contract shall

be completed within the time stipulated in the Contract, which shall be reckoned from the date of the commencement of the Installation work in accordance with Clause 41.18.1 hereof. Execution times indicated in the Contract are based on the assumption that the Site will be handed over to the Contractor free of obstacles and all other preconditions for installation of the material delivered are fully met.

41.16.4 *Extension of Time of Completion for Installation Work*

Save and except elsewhere provided in the Contract, should the amount of additional work of any kind or other circumstances of any kind whatsoever, which may occur, be

© 2022 MECON LIMITED. All rights reserved

such as fairly to entitle the Contractor to an extension of time for the completion of the Installation work, the Purchaser shall discuss and determine the period of such extension mutually with the Contractor.

41.16.5 *Rate of Progress*

The whole of the materials, plant, machinery, equipment and labour to be provided by the Contractor and the mode, manner and speed of execution of the Installation work are to be of a kind, and conducted in a manner, as per time schedule. Should the rate of progress of the Installation work be at any time, in the opinion of the Engineer / Purchaser, too slow to ensure the completion of the Work by the prescribed time or extended time for completion, the Purchaser / Engineer shall so notify the Contractor in writing, and the Contractor shall thereupon take such steps, as he may think necessary and the Purchaser / Engineer may approve, to, expedite the progress so as to complete the entire Installation work by the prescribed time or extended time for completion. If the Contractor shall request permission to work by night as well as by day, then if the Engineer shall grant permission to work also by night, then the Contractor shall not be entitled to any additional payment whatsoever for so doing but, if such permission is refused and there is no equivalent practicable method of expediting the progress of the work, the time for completion of the Installation work may be extended by the Purchaser by such period if any, as is solely attributable to such refusal and deemed proper by the Purchaser / Engineer.

41.16.6 *Night work without disturbance*

If work at night is permitted as aforesaid it shall be carried out without unreasonable noise and disturbance. The Contractor shall indemnify the Purchaser from, and against, any liability for damage on account of noise or other disturbance created while, or in carrying out the Installation work, and from, and against, all claims, demands, proceedings, damages costs, charges and expenses whatsoever in regard to or in relation to, such liability.

41.16.7 *Liquidated damages due to Delay in Completion*

41.16.7.1 If the Contractor fails to deliver as per the time schedules or complete the commissioning of the Project within the Time for Completion specified in the Contract or any extension thereof (allowed without Liquidated Damage) due to reasons attributable to the Contractor including its Sub-Contractors, the Purchaser shall be entitled to recover the amount of Liquidated Damages, but not by way of penalty, by making deductions from the Contractor's account lying with the Purchaser and if the amount to be deducted is not sufficient or available then by encashment of Contractor's Bank Guarantees, at the rate of 1% of the Contract Price, specified in the Contract , including taxes, duties, levies, cess,

© 2022 MECON LIMITED. All rights reserved

etc. per complete week of delay or part thereof up to a maximum of 10% of such Contract Price including taxes, duties, levies, cess, etc.

In case, the Contractor is a Consortium, the Purchaser shall recover the amount of Liquidated Damages, but not by way of penalty, by making deductions from the account of the each members of Consortium and if the amount is not available then as a last resort by encashment of their Bank Guarantees, at the rate of 1% of the Contract Price, specified in the Contract , including taxes, duties, levies, cess, etc. per complete week of delay or part thereof up to a maximum of 10% of such Contract Price including taxes, duties, levies, cess, etc.

41.16.7.2 Any recovery of Liquidated Damages shall be effected from the amount payable to the Contractor against Commissioning, Performance Guarantee Test, Final Acceptance Certificate and Performance Bank Guarantee.

41.16.7.3 The Purchaser may, without prejudice to any other method of recovery, deduct the amount of such damages from any amounts in his hands due to the Contractor. The payment or deduction of such damages shall not relieve the Contractor from his obligations to complete the work or from any other of his obligations and liabilities under the Contract.

41.17 Safety, Watching and Lighting

41.17.1 The Contractor shall be responsible for the provision of safety arrangement and protective clothing for all his workmen on Site whether or not engaged in actual Installation work thereof. He shall ensure that all his workmen on Site use safety belts, gloves, helmets, masks etc. as are necessary for their safety. The Contractor shall also be responsible for safety arrangement of all equipment used by him in connection with the installation and transportation work and shall employ only trained & competent operators to man the installation and transportation equipment. The Contractor shall use only tested equipment, tools, wire ropes etc. and shall periodically renew tests to the satisfaction of the Engineer. All test certificates shall be made available to the Engineer at site as and when required by him.

41.17.2 The Contractor shall, in connection with the Installation work, provide and maintain at his own cost all lights, guards, fencing and watching, when and where necessary or required by the Engineer or by any duly constituted authority, for the protection of the work and/or for the safety and convenience of the public or others. The Contractor shall

© 2022 MECON LIMITED. All rights reserved

provide at his own cost the necessary watch and ward to ensure security and safety of all equipment and materials placed under the Contractor's custody.

41.18 Security Regulations

The Contractor shall abide by all the security regulations at Site promulgated by the Purchaser from time to time. The Contractor shall provide identity badges for all his personnel which must be properly displayed by them at Site. In order to facilitate the issue of exit gate permits by the Purchaser for materials and equipment after the completion of the work, the Contractor shall submit to the Purchaser lists of installation equipment etc. and/or other materials that shall be taken by him inside the Site from time to time.

41.19 Care of Work

From the commencement to the completion of the installation work the Contractor shall take full responsibility for the care of plant, machinery and equipment and for all temporary works and in case any damage or loss shall happen to the plant, machinery and equipment or to temporary works from any cause whatsoever shall at his own cost replace or repair and make good the same.

41.20 Damage to Persons or Property

The Contractor shall indemnify and keep indemnified the Purchaser against all losses and claims for injuries or damage to any person or any property whatsoever which may arise out of, or in consequence of, the work at site carried out by the Contractor and against all claims, demands, proceedings, damages, costs, charges and expenses whatsoever in respect thereof or in relation thereto.

41.21 Extraordinary Traffic

The Contractor shall use every reasonable means to prevent any of the highways or bridges communicating with on the routes to the Site from being subjected to extraordinary traffic within the meaning of the Road Traffic Act, by any traffic of the Contractor or any of his Sub-Contractors and in particulars the Contractor shall select routes and use vehicles and restrict and distribute loads so that any such extraordinary traffic as will inevitably arise from moving of plant and materials from and to the Site shall be limited so far as reasonably possible and so that no unnecessary damage or injury may be occasioned to such highways and bridges. For any damage caused to highways or bridges by extraordinary traffic as aforesaid the Contractor shall be solely responsible.

41.22 Co-operation with other Contractors

The Contractor shall plan and execute his work in a phased manner as directed by the Purchaser from time to time and shall fully co-operate with other agencies working at site simultaneously and afford all responsible facilities to these agencies so as not to obstruct or retard the works

© 2022 MECON LIMITED. All rights reserved

simultaneously being executed by such agencies in any way.

41.23 Inspection of other Contractor's Works

If any part of the Contractor's work depends for proper execution on the Work of another contractor, the Contractor shall inspect and promptly report to Engineer/Purchaser, the defects, if any in such work that render it unsuitable for such proper execution and result. The Contractor's failure to so inspect and report shall constitute an acceptance of the other contractor's work as fit and proper for the reception of his work, except as to defects which may develop in the other contractor's work after the execution thereof.

41.24 Vesting of Constructional / Erection Plant etc.

All constructional/erection plant, temporary works and materials owned by the Contractor, or by any company in which the Contractor has a controlling interest, shall, when brought on to the Site, immediately be deemed to become the property of the Purchaser.

41.25 Irremovability of Constructional/Installation, Materials etc.

No Constructional/erection plant, temporary works or materials or any part thereof shall be removed from the site by the Contractor without the written consent of the Purchaser, which consent shall not be unreasonably withheld where the same is no longer immediately required for the purpose of the completion of the work and the Purchaser will permit the Contractor the exclusive use of all such constructional/erection plant, temporary works and materials in and for the completion of the work until the occurrence of any events which gives the Purchaser the right to exclude the Contractor from the Site and proceed with the completion of the Work.

41.26 Removal of Constructional/Installation Materials

Upon the removal of any such constructional/erection plant, temporary works and materials as have deemed to have become the property of the Purchaser under Clause 41.26 hereof, with consent as aforesaid, the property therein shall be deemed to revest in the Contractor and upon the completion of the Work, the property in the remainder of such constructional/erection plant, temporary works, and materials as aforesaid shall be deemed to re-vest in the Contractor. If the Contractor fails to remove any constructional/erection plant, temporary works or materials as aforesaid, within such reasonable time after completion of the Work as may be allowed by the Purchaser, then the Purchaser may sell any such constructional/erection plant, temporary works and materials as aforesaid and after deduction from any proceeds of sales, the costs, charges and expenses of and in connection with such sale, shall pay the balance (if any) to the Contractor, but to the extent that the proceeds of any sale are insufficient to meet all such costs, charges and expenses, the excess shall be a debt due from the Contractor to the Purchaser and shall be deductable or recoverable by the Purchaser accordingly as aforesaid.

41.27 Purchaser not liable for Loss or Injury to Construction/Erection Plant

The Purchaser shall not at any time be liable for the loss of or injury to, any of the constructional / erection plant, temporary works or materials.

© 2022 MECON LIMITED. All rights reserved

41.28 Work in or around an Operating Plant

When the work is being carried out in or around an operating plant, where the plant must run uninterrupted, the Contractor shall only work at specified places and times as mutually arranged between the Contractor and the Purchaser. The Contractor shall take sufficient care in moving his construction erection plant and equipment from one place to another in an operating plant so that they may not cause any damage to the property of the purchaser, like roads, overhead and underground cables, pipes and/or any other services or equipment or building and in the event of the contractor's failure to do so, the cost of such damages, including eventual loss of working hours as estimated by the Purchaser, is to be borne by the Contractor.

41.29 Site to be cleared on Completion of Work

During erection the Contractor shall at all times keep the working and storage areas used by him free from accumulation of waste materials and/or rubbish, immediately after the completion of erection, the Contractor shall remove or dispose of all temporary structures, waste, debris, rubbish etc. and leave the Site in a clean condition to the satisfaction of the Purchaser.

41.30 Possession Prior to Completion

The Purchaser shall have right to take possession of or use any completed or partially completed part of the Work. Such possession or use shall not be deemed to be in acceptance of any Work done not in accordance with the Contract.

41.31 Withholding Payment

The Purchaser will have full liberty to withhold and set off all sums due or to become due to the Contractor (including security deposit), whether under this or any other contract, against any sum due or to become due to the Purchaser from the Contractor under this or any other contract. The Purchaser also reserves the right to withhold the whole or part of the payment claimed by the Contractor which in the opinion of the Purchaser, is necessary to protect himself from loss on account of defective work not remedied, guarantees not met, claims filed against the Contractor, failure by the Contractor to make due payments for materials, labour employed by him, damages to other contractor etc. When grounds for withholding payments are removed to the satisfaction of the Purchaser, payment of the amount due to the Contractor shall be made by the Purchaser without interest.

41.32 Termination of Contract

The Purchaser, without prejudice to any other rights or remedies it may possess, may terminate the Contract in case of the Contractor's noncompliance of his undertakings and obligations under this Contract and more particularly but not limited to the following circumstances by giving notice of termination and its reasons thereof to the Contractor:

(i). if the Contractor becomes bankrupt or insolvent, has a receiving order issued against it, compounds with its creditors, or if, the Contractor is a corporation, a resolution is passed

© 2022 MECON LIMITED. All rights reserved

or order is made for its winding up (other than voluntary liquidation for the purpose of amalgamation or reconstruction), a receiver is appointed over any part of its undertaking or assets, or if the Contractor takes or suffers any other analogous action in consequence of debt;

(ii). if the Contractor assigns or transfers the Contract or any right or interest therein in violation of the terms of the Contract;

(iii). if the Contractor

a) abandoned or repudiated the Contract; or
b) have an execution levied on his goods or property; or
c) has without any valid reasons to the satisfaction of the Purchaser failed to commence Work as provided in the Contract promptly or has suspended the progress of the Contract performance for more than 14 (fourteen) days after receiving a written instruction from the Purchaser to proceed; or
d) persistently fails to execute the Contract in accordance with the Contract or persistently neglects to carry out its obligations under the Contract; or
e) Refuses or is unable to provide sufficient materials, service or labour and adequate resources to execute and complete the Work in the manner and progress rate as specified in the Contract.

(iv). Unjustified and un-warranted interruption of services performed by the Contractor and such interruption occurred for more than 15 (fifteen) days without assigning any reason.

(v). Errors, negligence, insufficiencies in the specifications and contractual work under execution, or failure to supply sufficient material or man-power as per Technical Specification or other similar circumstances affecting the quality of work for reasons attributable to the Contractor.

(vi). If during the work, it appears that the design, specifications, recommendations supplied / provided by or through the Contractor do not conform to the terms and conditions of the Contract and good and sound current engineering or fabrication practices.

(vii). If the Contractor disregards the instructions of the Purchaser in relation to the execution of the Installation work or refuses to implement instructions received from the Purchaser or Engineer within the stipulations of this Contract.

(viii). If the Contractor promises, offers or gives any bribe, commission, gift or advantage, either by himself or through his agent, to any officer or employee of the Purchaser or Engineer or to any person on their behalf in relation to the execution of this Contract.

Then, in any of the aforesaid cases, the Purchaser may serve the Contractor with a notice in writing to that effect, and if the Contractor does not, within seven (7) days after the delivery to him of such notice, proceed to make good his default, , and carry on the work in compliance with such directions as stated in the aforesaid notice to the entire satisfaction of the Purchaser, the Purchaser

© 2022 MECON LIMITED. All rights reserved

shall be entitled, after giving forty eight (48) hours` notice in writing to expel the Contractor from the Site without thereby avoiding the Contract or releasing the Contractor from any of his obligations or liabilities under the Contract or effecting the rights and powers conferred on the Purchaser by the Contract. The expiry of forty-eight (48) hours from the time of serving such notice in writing to the Contractor by the Purchaser shall be conclusive evidence of the expulsion of the Contractor from the Site, notwithstanding any physical presence of the Contractor or his workmen at Site after such expiry.

Upon receipt of termination hereof, the Contractor shall either immediately or upon such date as may be provided in the notice of termination:

(i). cease all such work, except for such work as the Purchaser may specify in the said notice for the sole purpose of protecting that part of the Project already executed or any work required to leave the Site in a clean and safe condition;

(ii). terminate all sub contracts except those to be assigned to the Purchaser pursuant to sub clause (iv) below;

(iii). deliver to the Purchaser the parts of the work /Project executed by the Contractor up to the date of termination;

(iv). to the extent legally permissible, assign to the Purchaser all rights, title and benefit of the Contractor in relation to the plant, machinery and equipment as at the date of termination and as may be required by the Purchaser, in any subcontracts concluded between the Contractor and its subcontractors;

(v). deliver to the Purchaser all drawing and specifications and other documents prepared by the Contractor or its subcontractor as at the date of termination in connection with the work.

Upon such expulsion or termination, the Purchaser may himself complete the Installation work or may employ any other contractor to complete the Work at the risk and cost of the Contractor. In such case, the Contractor shall be liable for any costs for obtaining and /or executing the balance of the work from another agency/contractor in excess of the Contract price. In case of termination of part of the Contract, the Contractor will continue performance on the Contract to the extent not terminated by the Purchaser. The Purchaser or such other contractor may use for such completion so much of the constructional / installation plant, temporary works and materials which has become the property of the Purchaser or which is available on the Site pursuant to Clause 41.28 hereof as he or they may think proper. The Purchaser pursuant to Clause 41.28 is entitled at any time to sell any of the said constructional / installation plant, temporary works and unused materials and apply the proceeds of sale in, or towards, the satisfaction of any sums due or which may become due to him from the Contract or under the Contract. The Purchaser may to the exclusion of the right of the Contractor take over and use any Contractors equipment owned by the Contractor and on the Site in connection with the Work for such reasonable period as the Purchaser considers expedient for the supply and Installation of the Project. Provided always that the Purchaser shall at any time after expelling the Contractor from the Site, have the right to rescind this Contract and claim damages from the Contractor. Provided further that, the exercise of any of the rights aforesaid, shall not prejudice the Purchaser's right and remedies under the law and under the Contract.

© 2022 MECON LIMITED. All rights reserved

41.33 Waiver

Provided always that, in any case in which any of the powers conferred upon the Purchaser by Clause 41.34 hereof shall have become exercisable but have not been exercised, the non-exercise thereof shall not constitute a waiver of any of the conditions thereof, and such powers shall notwithstanding be exercisable by the Purchaser in the event of any future case of default by the Contractor for which his liability for past and future defaults shall remain unaffected. Further, if any condition of the Contract has been waived by the Purchaser at the request of the Contractor in a specific case this will not constitute a waiver in all similar cases in future and will not be cited as precedence.

41.34 Valuation on Determination

The Purchaser shall as soon as may be practicable, after such expulsion of the Contractor from the Site, fix and determine ex-parte or by, or after, reference to the parties or after such investigation or enquiries as he may consider fit to make or institute and certify the amount (if any) which had at the time of such expulsion been earned by or would accrue to the Contractor in respect of the erection work till then executed by him under the Contract, as the Purchaser shall consider reasonable and proper. The Contractor shall have however no claim to compensation for any loss sustained by him, by reason of his having purchased or procured any equipment materials or entered into any commitments or made any advances on account of, or with a view to, the execution of the erection work or the performance of the Contract.

41.35 Payment after Termination

If the Contractor is expelled as aforesaid, the Purchaser shall not be liable to pay to the Contractor any moneys, including the security deposit on account of the Contract, until the costs of the completion of the erection work, considering the cost of carrying out the erection work, either by the Purchaser itself or by any other contractor employed by it, in excess of the sum which would have been payable to the Contractor if the erection work had been completed by the Contractor under the terms of Contract, damages for the delay in completion (if any) and all other expenses incurred by the Purchaser have been ascertained. The Contractor shall then be entitled to receive only such sum (if any) as the Purchaser may certify after deduction of the said amount from the sum payable to the Contractor. But if such amount shall exceed the sum which would have been payable to the Contractor, then the Contractor shall, upon demand, pay to the Purchaser the amount of such excess, and it shall be deemed a debt due by the Contractor to the Purchaser and be recoverable accordingly.

41.36 Jurisdiction

The Contract and all questions, disputes or differences arising under or in connection with this Contract, subject to Arbitration clause, shall be subject to the exclusive Jurisdiction of the courts within the local limits of Telangana, India.

© 2022 MECON LIMITED. All rights reserved

42.0 CONSTRUCTION OF CONTRACT

This Contract and the clauses thereof shall be interpreted and applied solely according their wording, to the objects in view. The Contract shall in all respects be construed and operated as a contract as defined in the Indian Contract Act, 1872, and, save as otherwise expressly provided herein, shall be governed by the provision of the said Act.

43.0 PENALTY FOR USE OF UNDUE INFLUENCE

The Contractor undertakes that he has not given, offered or promised to give, directly or indirectly any gift, consideration, reward, commission, fees, brokerage or inducement to any person in services of the Purchaser or otherwise in procuring the Contract or forbearing to do or for having done or forborne to do any act in relation to the obtaining or execution of the Contract or any other contract with the Government for showing or forbearing to show favour or disfavour to any person in relation to the contract or any other contract with the Government. Any breach of the aforesaid undertaking by the Contractor or any one employed by him or acting on his behalf (whether with or without the knowledge of the contractor) or the commission of any offence by the contractor or anyone employed by him or acting on his behalf, as defined in Chapter IX of Indian Penal Code, 1860 or the Prevention of Corruption Act, 1947 or any other Act enacted for the prevention of corruption shall entitle the Purchaser to cancel the contract and all or any other contracts with the contractor and recover from the contractor the amount of any loss arising from such cancellation. A decision of the Purchaser or his nominee to the effect that a breach of the undertaking has been committed shall be final and binding on the contractor.

Giving or offering of any gift, bribe or inducement or any attempt to any such act on behalf of the Contractor towards any officer/employee of the Purchaser or to any other person in a position to influence the decision of the Purchaser, directly or indirectly or any attempt to influence any officer/employee of the Purchaser, directly or indirectly or any attempt to influence any officer/employee of the Purchaser for showing any favour in relation to this or any other contract, shall render the Contractor to such liability/penalty as the purchaser may deem proper, including but not limited to termination of the Contract, imposition of penal damages, forfeiture of the Bank Guarantee and refund of the amount paid by the purchaser.

44.0 GENERAL

Should any conditions in the General Conditions of Contract be contrary to the Special Conditions of the Contract, if any, such special contract conditions shall prevail.

45.0 LIMITATION OF LIABILITY

Except in cases of criminal negligence or willful misconduct the aggregate liability of the Contactor to the Purchaser, whether under the Contract, in tort or otherwise, including the cost of repairing or replacing defective equipment shall not exceed the 100% (Hundred Percent) of the Contract Price, provided that this limitation shall not apply to the cost of repairing or replacing defective plant and equipment or any obligation of the Contractor to indemnify the Purchaser with respect to copyright (applicable to software) patent infringement and Employee/workman

© 2022 MECON LIMITED. All rights reserved

compensation and other liabilities and compensation as per the clauses specified in the Contract.

46.0 LIABILITY OF GOVERNMENT OF INDIA

It is expressly understood and agreed between the Contractor and the Purchaser that the Purchaser is entering into this Contract solely on its own behalf and not on behalf of any other person or entity. In particular, it is expressly understood and agreed that the Government of India is not a party to this Contract and has no liabilities, obligations or rights hereunder. It is expressly understood and agreed that the Purchaser is an independent legal entity with power and authority to enter into contracts solely on its own behalf under the applicable laws of India and general principles of Contract Law. The Contractor expressly agrees, acknowledges and understands that the Purchaser is not an agent, representative or delegate of the Government of India. It is further understood and agreed that the Government of India is not and shall not be liable for any acts, omissions, commissions, breaches or other wrongs arising out of the Contract. Accordingly, the Contractor hereby, expressly waives, releases and foregoes any and all actions and claims, including cross claims, impleader claims or counter claims against the Government of India arising out of this Contract and covenants not to sue the Government of India as to any manner, claim, and cause of action or thing whatsoever arising of or under this Contract.

© 2022 MECON LIMITED. All rights reserved

SECTION-VII

FORMATS & ANNEXURES

Annexure- I

PROCEDURE TO BE FOLLOWED FOR SUBMISSION OF TENDER
(In Separate Sealed Covers)

ENVELOPE NO.1:

PART – I "TECHNO- COMMERCIAL BID"
ALONGWITH TENDER FEE, EMD& INTEGRITY PACT
ENQUIRYNO. **UADNL/ADVT/GTE/PKG-01/0622/0** DATE:04/06/2022
DUE DATE : 11/07/2022@ 1730 HRS.

To
THE NODAL OFFICER
UADNL, HYDERABAD - 500 058.

NAME OF THE TENDERER:

ENVELOPE NO.2:

PART - II "PRICE BID"
ENQUIRYNO. **UADNL/ADVT/GTE/PKG-01/0622/0** DATE:04/06/2022
DUE DATE : 11/07/2022@ 1730 HRS.

To
THE NODAL OFFICER
UADNL, HYDERABAD - 500 058.

NAME OF THE TENDERER:

PLEASE PUT ALL THE TWO ENVELOPES IN A BIGGER SIZE ENVELOPE:

ENVELOPE NO: 3 (BOTH THE ENVELOPE NO. 1 & NO. 2 TO BE PLACED IN THE ENVELOPE NO. 3):

ENQUIRYNO. **UADNL/ADVT/GTE/PKG-01/0622/0** DATE:04/06/2022
DUE DATE : 11/07/2022@ 1730 HRS.

CONTENTS:

1) TECHNO-COMMERCIAL BID
2) PRICE BID

To
NODAL OFFICER
UTKARSHA ALUMINIUM DHATU NIGAM LIMITED(UADNL)
PO: KANCHANBAGH,
HYDERABAD - 500 058.

NAME OF THE TENDERER:

Annexure- 2

PRE CONTRACT INTEGRITY PACT

General

1. Whereas **M/s. Utkarsha Aluminium Dhatu Nigam Limited (UADNL), is a Joint Venture company of M/s National Aluminium Company Limited (NALCO), a Navratna CPSE under Ministry of Mines and M/s Mishra Dhatu Nigam Limited (MIDHANI), a Miniratna CPSE under the Ministry of Defence** incorporated and registered under the Companies Act 1956 with its registered office situated at P.O Kanchanbagh, Hyderabad – 500 058, Telangana, India hereinafter referred to as the Buyer and the first part, propose to _____ _____hereinafter referred to as ……., and M/s. _____, (which term shall mean and include its successors assigns and legal representation), herein after referred to as the Bidder and the second party, has offered the stores.

2. Whereas the Bidder is a private company / public company / partnership / registered export agency, constituted in accordance with the relevant law in the matter and the Buyer is a Ministry of the Government of India performing its functions on behalf of the President of India.

Objectives

3. Now, therefore, the Buyer and the Bidder agree to enter into this Pre-contract agreement, hereinafter referred to as Integrity Pact, to avoid all forms of corruption by following a system that is fair, transparent and free from any influence / unprejudiced dealings prior to, during and subsequent to the currency of the contract to be entered into with a view to: -

3.1 Enabling the Buyer to obtain the desired equipment at a competitive price in conformity with the defined specifications of the Service by avoiding in high cost and the distortionary impact of corruption on public procurement, and

3.2 Enabling bidder to abstain from bribing or any corrupt practice in order to secure the contract by providing assurance to them that their competitors will also refrain from bribing and other corrupt practices and the Buyer will commit to prevent corruption, if any form, by their officials by following transparent procedures.

Commitments of the Buyer:

4. The Buyer Commits itself to the following: -

4.1 The Buyer undertakes that no official of the Buyer connected directly or indirectly with the contract, will demand, take a promise for or accept directly or through intermediaries, any bribe, consideration, gift, reward, favour or any material or immaterial benefit or any other advantage from the Bidder, either for themselves or for any person, organization of third party related to the contract in exchange for an advantage in the bidding process, bid evaluation, contracting or implementation process related to the contract.

4.2 The buyer will, during the pre-contract stage, treat all Bidders alike, and will provide to all Bidders the same information and will not provide any such information to any particulars Bidder which could afford an advantage to that particular Bidder in comparison to other Bidders.

4.3 All the officials of the Buyer will report to the appropriate Government office any attempted or completed breaches of the above commitments as well as any substantial suspicion of such a breach.

5. In case of any such preceding misconduct on the part of such officials (s) is reported by the bidder to the Buyer with full and verifiable facts and the same is prima facie found to be correct by the Buyer, necessary disciplinary proceedings, or any other action as deemed fit, including criminal proceedings may be initiated by the Buyer and such a person shall be debarred from further dealings related to the contract process. In such a case while an enquiry is being conducted by the Buyer the proceedings under the contract would not be stalled.

Commitments of Bidders:

6. The Bidder commits himself to take all measures necessary to prevent corrupt practices, unfair means and illegal activities during any stage of his bid or during any pre-contract or post-contract stage in order to secure the contract or in furtherance to secure it and in particular commits himself to the following:-

6.1 The Bidder will not offer, directly or through intermediaries, any bribe, gift, consideration, reward, favour, any material or immaterial benefit or other advantage, commission, fees, brokerage or inducement to any official of the Buyer, connected directly or indirectly with the bidding process, or to any person, organization or third party related to the contract in exchange for any advantage in the bidding, evaluation, contracting and implementation of the Contract.

6.2 The Bidder further undertakes that he has not give, offered or promised to give, directly or indirectly any bribe, gift, consideration, reward, favour, any material or immaterial benefit or other advantage, commission, fees, brokerage or inducement to any official of the Buyer or otherwise in procuring the contract or forbearing to do or having done any act in relation to the obtaining or execution of the Contract or any other contract with the Government for showing or forbearing to show favour or disfavor to any person in relation to the Contract or any other contract with the Government.

6.3 The Bidder will not collude with other parties interested in the contract to impair the transparency, fairness and progress of the bidding process, bid evaluation, contracting and implementation of the contract.

6.4 The Bidder will not accept any advantage in exchange for any corrupt practice, unfair means and illegal activities.

6.5 The Bidder further confirms and declares to the Buyer that the Bidder is the original manufacture / integrator / authorized government sponsored export entity of the defence stores and has not engaged any individual or firm or company whether Indian or foreign to intercede, facilitate or in any way to recommend to the Buyer or any of its functionaries, whether officially or unofficially to the award of the contract to the Bidder, nor has any amount been paid, promised or intended to be paid to any such individual, firm or company in respect of any such intercession, facilitation or recommendation.

6.6 The Bidder, either while presenting the bid or during pre-contract negotiations or before signing the contract, shall disclose any payments he has made, is committed to or intends to make to officials of the Buyer of their family members, agents, brokers or any other intermediaries in connection with the contract and the details of services agreed upon for such payments.

6.7 The Bidder shall to use improperly, for purposes of competitor or personal gain, or pass on to others, any information provided by the Buyer as part of the business relationship, regarding plans, technical proposals and business details, including information contained in any electronic data carrier. The Bidder also undertakes to exercise due and adequate care last any such information is divulged.

6.8 The Bidder commits to refrain from giving any complaint direct or through any other manner without supporting it with full and verifiable facts.

6.9 The Bidder shall not instigate or cause to instigate any third person to commit any of the actions mentioned above.

6.10 A person signing IP shall not approach the courts while representing the matters to IEMs and he/she will await their decision in that matter.

6.11 A Bidder undertakes that in case of subcontracting, he becomes a Principal Contractor and he/she shall take the responsibility of adoption of IP by the sub contractor.

7. Previous Transgression

7.1 The Bidder declares that no previous transgression occurred in the last three years immediately before signing of this Integrity Pact, with any other company in any country in respect of any corrupt practices envisaged hereunder or with any Public Sector Enterprise in India or any Government Department in India that could justify bidder's exclusion from the tender process.

7.2 If the Bidder makes incorrect statement on this subject, Bidder can be disqualified from the tender process or the contract, if already awarded, can be terminated for such reason.

8. Earnest Money / Security Deposit

8.1 Every bidder, while submitting commercial bid, shall deposit an amount as specified in the NIT as Earnest Money / Security Deposit, with the buyer ONLINE or through any of the following instruments:

i. Bank Guarantee or a Demand draft in favour of M/s. Utkarsha Aluminium Dhatu Nigam Limited , Hyderabad.

ii. A confirmed guarantee by an Indian Nationalized Bank, promising payment of the guarantee sum to M/s. Utkarsha Aluminium Dhatu Nigam Limited, Hyderabad on demand within three working days without any demur whatsoever and without seeking any reasons whatsoever. The demand for payment by the Buyer shall be treated as conclusive proof for payment.

8.2 The Earnest Money / Security Deposit shall be valid upto a period of Six Months or the complete conclusion of the contractual obligations to complete satisfaction of both the bidder and the buyer, whichever is later. In case there are more than one bidder, the Earnest Money / security deposit shall be refunded by the buyer to those bidder) s) whose bid (s) does/do not qualify for negotiation by the Commercial Negotiation Committee (CNC) as constituted by the Buyer, Immediately after recommendation is made by the CNC on the bid(s) after an evaluation.

8.3 In the case of successful bidder a clause would also be incorporated in the Article pertaining to Performance Bond in the Purchase Contract that the provisions of sanctions for violation shall be applicable for forfeiture of performance bond in case of a decision by the Buyer to forfeit the same without assigning any reason for imposing sanction for violation of this pact.

8.4 The provisions regarding Sanctions for violation in Integrity Pact include forfeiture of performance Bond in case of a decision by the Buyer to forfeit the same without assigning any reason for imposing sanction for violation of Integrity Pact.

8.5 No interest shall be payable by the Buyer to the Bidder(s) on earnest money / Security Deposit for the period of its currency.

9. Company Code of Conduct

9.1 Bidders are also advised to have a company code of conduct (clearly rejecting the use of bribes and other unethical behavior) and a compliance program for the implementation of the code of conduct throughout the company.

10. Sanctions for Violation:

10.1 Any breach of the aforesaid provisions by the Bidder or any one employed by him or acting on his behalf (whether with or without the knowledge of the Bidder) or the commission of any offence by the Bidder or any one employed by him or acting on his behalf, as defined in chapter IX of the Indian Penal Code, 1860 or the Prevention of Corruption Act 1988 or any other act enacted for the prevention of corruption shall entitle the Buyer to take all or any one of the following actions, wherever required: -

i) To immediately call off the pre-contract negotiations without assigning any reason or giving any compensation to the Bidder. However, the proceedings with the other Bidder(s) would continue.

ii) The earnest Money / Security Deposit / Performance Bond shall stand forfeited either fully or partially, as decided by the Buyer and the Buyer shall to be required to assign any reason therefore.

iii) To immediately cancel the contract, if already signed, without giving any compensation to the Bidder.

iv) To recover all sums already paid by the Buyer, and in case of an Indian Bidder with interest thereon at 2% higher than the prevailing Prime Lending Rate, while in case of a Bidder from a country other than India with interest thereon at 2% higher than LIBOR. If any outstanding payment is due to the Buyer from the Bidder in connection with any other contract for any other Defence stores, such outstanding payment could also be utilized to recover the aforesaid sum and interest.

v) To en-cash the advance bank guarantee and performance bond / warranty bond, if furnished by the Bidder, in order to recover the payments, already made by the Buyer, along with interest.

vi) To cancel all or any other Contracts with the Bidder.

vii) To debar the Bidder from entering into any bid from the Government of India for a minimum period of five years, which may be further extended at the discretion of the buyer.

viii) To recover all sums paid in violation of this Pact by Bidder(s) to any middleman or agent or broker with a view to securing the contract.

ix) If the Bidder or any employee of the Bidder or any person acting on behalf of the Bidder, either directly or indirectly, is closely related to any of the officers of the Buyer, or alternatively, if any close relative of an office of the Buyer has financial interest / stake in the

Bidder's firm, the same shall be disclosed by the Bidder at the time of filing of tender. Any failure to disclose the interest involved shall entitle the Buyer to rescind the contract without payment of any compensation to the Bidder. The term 'close relative' for this purpose would mean spouse whether residing with the Government servant or not, but to include a spouse separated from the Government servant by a decree or order of a competent court, son or daughter or step son or step daughter and wholly dependent upon Government servant, but does not include a child or step child who is no longer in any way dependent upon the Government servant or of whose custody the Government servant has been deprived of by or under any law, any other person related, whether by blood or marriage, to the Government servant or to the Government servant's wife or husband and wholly dependent upon Government servant.

x) The Bidder shall not lend to or borrow any money from or enter into any monitory dealings or transactions directly or indirectly, with any employee of the Buyer, and if he does so, the Buyer shall be entitled forthwith to rescind the contract and all other contracts with the Bidder. The Bidder shall be liable to pay compensation for any loss or damage to the Buyer resulting from such rescission and the Buyer shall be entitled to deduct the amount so payable from the money(s) due to the Bidder.

xi) In cases where irrevocable Letters of Credit have been received in respect of any contract signed by the Buyer with Bidder, the same shall not be opened.

10.2 The decision of the Buyer to the effect that a breach of the provisions of this Integrity Pact has been committed by the bidder shall be final and binding on the Bidder, however, the Bidder can approach the monitor(s) appointed for the purposes of this pact.

11. Fall Clause

11.1 The Bidder undertakes that he has not supplied/is not supplying the similar systems or subsystems at a price lower than that offered in the present bid in respect of any other Ministry / Department of the Government of India and if it is found at any stage that the similar system or sub-system was supplied by the Bidder to any other Ministry / Department of the Government of India a at lower price, then that very price will be applicable to the present case and the difference / in the cost would be refunded by the Bidder to the Buyer, if the contract has already been concluded.

11.2 The Bidder shall strive to accord the most favored customer treatment to the Buyer in respect of all matters pertaining to the present case.

12. Independent Monitors

12.1 Shri R MUKUNDAN, IRPS(Retd) , No.150-E, "Mandakini" Railway Officer's Enclave, Sterling Road, Nungambakam, CHEENAI-600 034 is the Independent External Monitor for Midhani.

12.2 As soon as the Monitor notices, or believes to notice, a violation of this agreement, he will so inform the Chairman & Managing Director of M/s. Utkarsha Aluminium Dhatu Nigam Limited , Hyderabad.

13. Examination of Books of Accounts: In case of any allegation of violation of any provisions of this Integrity Pact or payment of commission, the Buyer or its agencies shall be entitled to

examine the Books of accounts of the Bidder and the Bidder shall provide necessary information of the relevant financial documents in English and shall extend all possible help for the purpose of such examination.

14. Law and Place of Jurisdiction: This Pact is subject to Indian Law. The place of performance and jurisdiction is the seat of the Buyer i.e. Hyderabad.

15. Other Legal Actions: The actions stipulated in this Integrity Pact are without prejudice to any other legal action that may follow in accordance with the provisions of the extent law in force relating to any civil or criminal proceedings.

16. Validity

16.1 The validity of this Integrity Pact shall be from date of its signing and extend upto 5 years or the complete execution of the contract to the satisfaction of both the Buyer and the Bidder, whichever is later.

16.2 Should one or several provisions of this Pact turn out to be invalid, the remainder of this Pact remains valid. In this case, the parties will strive to come to an agreement to their original intentions.

17. The parties hereby sign this Integrity Pact at Hyderabad on _____.

BIDDER

In the presence of

Witness:

1.

2.

BUYER

M/s. Utkarsha Aluminium Dhatu Nigam Limited ,
P.O. Kanchanbagh,
Hyderabad 500 058,
INDIA.

In the presence of

Witness:

1.

2.

ANNEXURE- 3

SPECIMEN FORMS OF BANK GUARANTEES

1. BANK GUARANTEE FOR EARNEST MONEY DEPOSIT
2. FORM OF BANK GUARANTEE IN LIEU OF SECURITY DEPOSIT
3. BANK GUARANTEE TO SECURE THE INITIAL ADVANCE PAYMENT
4. BANK GUARANTEE FORMAT FOR GA DRAWINGS
5. BANK GUARANTEE FOR LOTWISE SUPPLIES
6. PERFORMANCE BANK GUARANTEE

1. BANK GUARANTEE FOR EARNEST MONEY DEPOSIT

2. WHEREAS UTKARSHA ALUMINIUM DHATU NIGAM LIMITED (UADNL) PO KANCHANBAGH, HYDERABAD (hereinafter referred as " The Owner / Company" which expression shall unless repugnant to the subject or context includes its legal representatives, successors and assigns) has issued tender paper vide its Tender No: _____ for supply of _____ (herein after called "the said tender") to M/s. _____ (herein after called "the said Tenderer(s)" which expression shall unless repugnant to the subject or context includes their legal representatives, successors and assigns) and as per terms and conditions of the said tender, the tenderer shall submit a Bank Guarantee for Rs./USD_____ towards earnest money in lieu of cash.

3. WE (Bank Name and Address) (herein after called the bank) do hereby undertake to pay the amount due and payable under this Guarantee without any demur merely on a demand from the company stating that in the opinion of the company, which is final and binding, the amount claimed is due because of any withdrawal of the tender or any material alteration to the tender after the opening of the tender by way of any loss or damage caused or would be caused or suffered by the company by reason of any breach by the said tenderer(s) of any of the terms and conditions contained in the said tender or failure to accept the Letter of Intent / Agreement or that the amount covered under this Guarantee is forfeited. Any such demand made on the bank by the owner shall be conclusive as regards the amount due and payable by the Bank under this Guarantee. However, our liability under this guarantee shall be restricted to an amount not exceeding Rs./USD_____.

4. We undertake to pay to the Company any money so demanded notwithstanding any dispute or disputes raised by the tenderer(s) in any suit or proceeding pending before any office, court or tribunal relating thereto, our liability under this present guarantee being absolute and unequivocal. The payment so made by us under this bond shall be a valid discharge of our liability for payment thereunder. Our liability to pay is not dependant or conditional on the owner proceeding against the tenderer.

5. The guarantee herein contained shall not be determined or affected or suspended by the liquidation or winding up, dissolution or change of constitution or insolvency of the said

tenderer(s) but shall in all respect and for all purposes be binding and operative until payment of all money due or liabilities under the said tender are fulfilled.

6. WE (Bank Name and Address) further agree that the guarantee herein contained shall remain in full force and effect during the period that would be taken for the finalization of the said tender and that it shall continue to be enforceable till the said tender is finally decided and order placed on the successful tenderer(s) and /or till all the dues of the company under/or by virtue of the said tender have been fully paid and its claims satisfied or discharged or till a duly authorized officer of the company certifies that the terms and conditions of the said tender have been fully and properly carried out by the said tender(s) or till date: _____ whichever is earlier and accordingly discharges the guarantee.

7. That the Owner/Company will have full liberty without reference to us and without affecting this guarantee to postpone for any time or from time to time, the exercise of any of the power of the owner under the tender.

8. We (Bank Name and Address), lastly undertake not to revoke this guarantee during its currency except with the previous consent of the company in writing. We further undertake to keep this Guarantee renewed from time to time on the request of the Tenderer(s).

9. Notwithstanding anything contained herein before, our liability shall not exceed Rs./USD_____ towards earnest money in lieu of cash and shall remain in force till (date). Unless a demand or claim under this Guarantee is made on us within three months from the date of expiry i.e., _____ we shall be discharged from all the liabilities under this guarantee

   Date: _____ (Bank Name and Address)

   Signature of duly
   Authorized person
   On behalf of the Bank
   With seal & signature code

2. FORM OF BANK GUARANTEE IN LIEU OF SECURITY DEPOSIT

1. This deed of guarantee executed on ……day of …… by …… ……

   (Name and Address of the Bank)

   the Bank hereinafter called Bank (which term shall mean and include its successors and assigns wherever the context so admits) in favour of M/s. Utkarsha Aluminium Dhatu Nigam Limited (UADNL) having its registered office at P.O. Kanchanbagh, Hyderabad – 500 058, state of A.P. India, herein after referred to as the "purchaser" (which terms shall mean and include its successors in office and assigns).

2. In consideration of M/s. Utkarsha Aluminium Dhatu Nigam Limited (UADNL) (Purchaser) having agreed to exempt …….. hereinafter called the said Contractor(s) (which term shall mean and include its successors assigns and legal representatives) from the demand under the terms and conditions of Purchase / Work Order No. …….. dated …… for ……..(hereinafter called the said agreement) of Earnest Money / Security Deposit/ Defect Liability deposit for the due fulfillment by the said Contractor(s) of the terms and conditions contained in the said agreement on production of a bank guarantee for Rs……(Rupees…… only), we …… (name of the bank, address) (hereinafter referred to as "The Bank") at the request of …… Contractor(s) do hereby undertake to pay Purchaser an amount not exceeding Rs …… against any losses or damage caused to or suffered or would be caused to or suffered Purchaser by reason of any breach by the said Contractor(s) of any of the terms and conditions contained in the said agreement.

3. We …… (Bank) do hereby unconditionally and irrevocably agree and undertake to pay to Purchaser the amounts due and payable under this Guarantee without any demur, merely on a demand from Purchaser stating that the amount claimed is due by way of loss or damage caused to or would be caused to on suffered by Purchaser by reason of breach by the said agreement or by reason of the contractor(s) failure to perform the said agreement. Any such demand made on the Bank shall be conclusive as regards the amount due and payable by the Bank under this Guarantee. However, our liability under this Guarantee shall be restricted to an amount not exceeding Rs ……

4. We undertake to pay Purchaser and money so demanded notwithstanding any dispute or disputes by the contractor(s) / supplier(s) in any suit or proceedings pending before any court of tribunal relating thereto, our liability under this present being absolute and unequivocal. The payment so made by us under this Guarantee shall be valid discharge of our liability for payment thereunder and the contractor(s) shall have not claim against us for making such payment.

5. We …… (Bank) further agree that the guarantee herein contained shall remain in full force and affect during the period that would be taken for the performance of the said Agreement and that it shall continue to be enforceable till all the dues of Purchase under or by virtue of the said Agreement have been fully paid and its claims satisfied or discharges or till Purchaser certifies that the terms and conditions of the said Agreement have been fully and properly carried out by the said contractor(s) and accordingly discharges this guarantee. Provided that if Purchaser together with the Contractor seeks an extension of terms of the Guarantee, such extension shall be granted by the Bank and the guarantee shall be in full force till the expiry of such extended period.

6. We …… (Bank) further agree with Purchaser that Purchaser shall have the fullest liberty without our consent and without affecting in any manner our obligations hereunder to vary any of the terms and conditions of the said agreement or to extend time of performance by the said contractor(s) from time to time or to postpone for any time or from time to time any of the powers exercisable by purchaser against the said Contractor(s) and to forebear or enforce any of the terms and conditions relating to the said agreement and we shall not be relieved from our liability by reason of any such variation of extension being granted to the said contractor(s) or for any forbearance, act or omission on the part of Purchaser or any indulgence by Purchaser to the said contractor(s) or by any such matter or thing whatsoever which under the law relating to sureties would but for this provisions, have effect of so relieving us.

7. It shall not be necessary for Purchaser to proceed against the contractor before proceeding against the Bank and the guarantee herein contained shall be enforceable against the Bank notwithstanding any security which Purchaser may have obtained or obtains from the contractor.

8. This guarantee shall not be discharged due to the change in the constitution of the Bank or the contractor(s).

9. We …… (Bank) lastly undertake not to revoke this guarantee during its currency except with the previous consent of Purchase in writing.

10. Our liability is limited to a sum not exceeding Rs …… unless a claim is made on us in writing on or before …… (3 months beyond the date of delivery / completion as specified in the contract) we shall be discharged from liability under this guarantee.

    In witness whereof these presents are executed at …… on the date, month and year first herein above written.

FOR AND ON BEHALF OF THE BANK WITHIN NAMED

3. BANK GUARANTEE TO SECURE THE INITIAL ADVANCE PAYMENT

1. This deed of guarantee executed on ……day of …… by……
……

(Name and Address of the Bank)

the Bank hereinafter called Bank (which term shall mean and include its successors and assigns wherever the context so admits) in favour of M/s. UTKARSHA ALUMINIUM DHATU NIGAM LIMITED (UADNL), registered as a company under the Companies Act, 1956, having its registered office at P.O. Kanchanbagh, Hyderabad – 500 058, state of A.P. India, herein after referred to as the "purchaser" (which terms shall mean and include its successors in office and assigns).

2. In consideration of M/s.UTKARSHA ALUMINIUM DHATU NIGAM LIMITED (Purchaser) agreeing to make an advance payment of Rs …… representing …… % of the total contract value along with the 12% interest per annum as per the terms and conditions of the Purchase / Works Order No. …… dated …… (hereinafter called the Agreement) to …… hereinafter called the said Contractor(s) (which term shall mean and include its successors assigns and legal representatives) on production of a bank guarantee for Rs
……(Rupees……
…… only), we …… (name of the bank, address) (Hereinafter referred to as "The Bank") at the request of ……
Contractor(s) do hereby undertake to pay Purchaser an amount not exceeding Rs …… against any losses or damage caused to or suffered or would be caused to or suffered Purchaser by reason of any breach by the said Contractor(s) of any of the terms and conditions contained in the said agreement.

3. We …… (Bank) do hereby unconditionally and irrevocably agree and undertake to pay to Purchaser the amounts due and payable under this Guarantee without any demur, merely on a demand from Purchaser stating that the amount claimed is due by way of loss or damage caused to or would be caused to on suffered by Purchaser by reason of breach by the said agreement or by reason of the contractor(s) failure to perform the said agreement. Any such demand made on the Bank shall be conclusive as regards the amount due and payable by the Bank under this Guarantee. However, our liability under this Guarantee shall be restricted to an amount not exceeding Rs ……

4. We undertake to pay Purchaser and money so demanded notwithstanding any dispute or disputes by the contractor(s) / supplier(s) in any suit or proceedings pending before any court of tribunal relating thereto, our liability under this present being absolute and unequivocal. The payment so made by us under this Guarantee shall be valid discharge of our liability for payment thereunder and the contractor(s) shall have not claim against us for making such payment.

5. We …… (Bank) further agree that the guarantee herein contained shall remain in full force and affect during the period that would be taken for the performance of the said Agreement and that it shall continue to be enforceable till all the dues of Purchase under or by virtue of the said Agreement have been fully paid and its claims satisfied or discharges or till Purchaser certifies that the terms and conditions of the said Agreement have been fully and properly carried out by the said contractor(s) and accordingly discharges this guarantee. Provided that if Purchaser together with the Contractor seeks an extension of terms of the Guarantee, such extension shall be granted by the Bank and the guarantee shall be in full force till the expiry of such extended period.

6. We …… (Bank) further agree with Purchaser that Purchaser shall have the fullest liberty without our consent and without affecting in any manner our obligations hereunder to vary any of the terms and conditions of the said agreement or to extend time of performance by the said contractor(s) from time to time or to postpone for any time or from time to time any of the powers exercisable by purchaser against the said Contractor(s) and to forebear or enforce any of the terms and conditions relating to the said agreement and we shall not be relieved from our liability by reason of any such variation of extension being granted to the said contractor(s) or for any forbearance, act or omission on the part of Purchaser or any indulgence by Purchaser to the said contractor(s) or by any such matter or thing whatsoever which under the law relating to sureties would but for this provisions, have effect of so relieving us.

7. It shall not be necessary for Purchaser to proceed against the contractor before proceeding against the Bank and the guarantee herein contained shall be enforceable against the Bank notwithstanding any security which Purchaser may have obtained or obtains from the contractor.

8. This guarantee shall not be discharged due to the change in the constitution of the Bank or the contractor(s).

9. We …… (Bank) lastly undertake not to revoke this guarantee during its currency except with the previous consent of Purchase in writing.

10. Our liability is limited to a sum not exceeding Rs …… unless a claim is made on us in writing on or before …… (3 months beyond the date of delivery / completion as specified in the contract) we shall be discharged from liability under this guarantee.

    In witness whereof these presents are executed at,…… on the date, month and year first herein above written.

FOR AND ON BEHALF OF THE BANK WITHIN NAMED

4. BANK GUARANTEE TO SECURE THE PAYMENT FOR GENERAL ARRANGEMENT DRAWING

This Deed of Guarantee executed on..... Day of..... by..... Bank. ..... hereinafter called the "Guarantor" (which term shall mean and include its successors, assigns and legal representatives, where the context so admits) in favour of M/s. UTKARSHA ALUMINIUM DHATU NIGAM LIMITED and registered as a Company under the Companies Act, 1956, having its registered office at P.O. Kanchanbagh, Hyderabad - 500 058, State of A.P. INDIA, hereinafter referred to as the "Purchaser", (which term shall mean and include its successors and assigns).

WHEREAS the Contract vide Purchase Order No: …….., date …….. has been entered into between the Purchaser and M/s. …… a company incorporated and registered under the Companies Act 1956 by which the company is permitted to manufacture and sell products and having its registered office situated at …….. Hereinafter referred to as the CONTRACTOR, (which term shall mean and include its successors, assigns and legal representatives) for the purchase of ……. as fully described in the aforesaid contract.

AND WHERE AS it has been agreed under the terms and conditions of the aforesaid contract that the Purchaser shall make an advance payment to the Contractor of ₹ ……(in words ……..) representating ……..% of the total contract value along with the 12% interest per annum for utilizing it for the purpose of contract on furnishing a Guarantee from a Bank.

AND WHERE AS the Gurantor has, as per the terms and conditions of the aforesaid contract, agreed to stand guarantee for the amount of advance payment including interest there on in favour of the Contractor.

NOW THIS DEED witnesses that in pursuance of the terms and conditions of the aforesaid contract and in consideration of the advance payment of ₹ …….. representating …….% of the total value of the Contract agreed to be made to the Contractor by the Purchaser, the Guarantor do hereby agree and undertake to indemnify the department, and keep the department indemnified to the extent of a sum not exceeding the said sum of ₹ …… (in words Rupees …….) against any damage or loss that may be suffered by the purchaser by reason of nonfulfilment of any of the terms and conditions of the contract by the contractor and the Guarantor hereby undertake to pay on demand and without any demur to the Department any sum unconditionally and irrevocably not exceeding the sum of ₹ …… (Rupees …….) as may be ascertained by the GM (Commercial) of the Purchaser as the damages or loss that the department may have suffered by reason of nonfulfillment of any particular terms and conditions of the Contract by the Contractor, provided that the Guarantee comes into force when the advance payment has been made to the account of the Contractor and Guarantor hereby covenants with the Department as follows:

(1) That the decision of the General Manager (Commercial) of the Purchaser as to whether the contractor has committed breach of any such terms and conditions of the Contract or not and as to the amount of damages or loss assessed by the said official of the Purchaser on account of such breach shall be conclusive final and binding on the Guarantor.

(2) That the Guarantee herein contained shall remain in full force and effect till the Contract delivery date viz. by which date all the supplies required under the aforesaid contract are expected to be completed to the full satisfaction of the department / purchaser or till the purchaser certifies in writing that the terms and conditions of the said Contract and accordingly discharges the Guarantee. The Guarantor undertakes to pay on demand and without any demur the amount demanded by the department or GM (Commercial) of purchaser unconditionally and irrevocably. Unless a demand or claim under this Guarantee is made on the Guarantor in writing on or before ……., the Guarantor shall be discharged from all liabilities under this Guarantee thereafter.

(3) That the purchaser shall have the fullest liberty, without Guarantor's consent and affecting in any way the liability of the Guarantor under this Guarantee or Indemnity from time to time to vary any of the terms and conditions of the said contract or to extend time of Performance by the said contractor or to postpone for any time or from time to time any of the powers exercisable by it against the said contractor and either to enforce or forbear from enforcing any of the terms and conditions governing the said Contract and the said Guarantor shall not be released from its liability under these presents by any exercise by the Department of GM (Commercial). Purchaser of the liberty with reference to matters aforesaid act or omission on the part of the purchaser or any indulgence by the purchaser to the said contractor or of any other matter or thing whatsoever which under the law relating to sureties would but for this provision have the effect of so releasing the Guarantor from its liability.

(4) It shall not be necessary for the department or GM (Commercial) of the Purchaser to proceed against the Contractor before proceeding against the Guarantor and the Guarantee herein contained shall be enforceable against the Guarantor notwithstanding any security which the Purchaser may have obtained or obtain from the Contractor at the time when proceedings are taken against the Guarantor hereunder be outstanding or unrealised.

(5) The Guarantor undertakes to pay to the department / purchaser any money so demanded notwithstanding any dispute or disputes raised by the Contractor with the Guarantor or purchaser / department in any suit or proceedings pending before any court or tribunal relating thereto the guarantor's liability under these presents being absolute and unequivocal.

(6) The Guarantor lastly undertakes not to revoke this Guarantee during its currency except with the previous consent of the Purchaser in writing and agrees that any change in the constitution of the said Contractor or the said Guarantor shall not discharge the Guarantor's liability hereunder.

(7) Our liability is limited to a sum not exceeding ₹…… unless a claim is made on us in writing on or before ……. (3 months beyond the date of delivery / completion as specified in the Contract) we shall be discharged from liability under this guarantee.

In witness where of these presents are executed at ……. on the date, month and year first herein above written.

FOR & ON BEHALF OF THE GUARANTOR WITHIN NAMED

5. BANK GUARANTEE TO SECURE THE PAYMENT MADE AGAINST LOT WISE SUPPLY

1. This deed of guarantee executed on ……day of …… by……

(Name and Address of the Bank)

the Bank hereinafter called Bank (which term shall mean and include its successors and assigns wherever the context so admits) in favour of M/s. UTKARSHA ALUMINIUM DHATU NIGAM LIMITED and registered as a company under the Companies Act, 1956, having its registered office at P.O. Kanchanbagh, Hyderabad – 500 058, state of A.P. India, herein after referred to as the "purchaser" (which terms shall mean and include its successors in office and assigns).

2. In consideration of M/s. UTKARSHA ALUMINIUM DHATU NIGAM LIMITED (Purchaser) agreeing to make payment of Rs …… representing …… % of the value of indigenously dispatched goods (lot wise) as per the terms and conditions of the Purchase / Works Order No. …… dated …… (Hereinafter called the Agreement) to …… hereinafter called the said Contractor(s) (which term shall mean and include its successors assigns and legal representatives) on production of a bank guarantee covering the lot value plus interest at12% p.a. for Rs …… (Rupees …… only), we …… (name of the bank, address) (Hereinafter referred to as "The Bank") at the request of …… Contractor(s) do hereby undertake to pay Purchaser an amount not exceeding Rs …… against any losses or damage caused to or suffered or would be caused to or suffered Purchaser by reason of any breach by the said Contractor(s) of any of the terms and conditions contained in the said agreement.

3. We …… (Bank) do hereby unconditionally and irrevocably agree and undertake to pay to Purchaser the amounts due and payable under this Guarantee without any demur, merely on a demand from Purchaser stating that the amount claimed is due by way of loss or damage caused to or would be caused to on suffered by Purchaser by reason of breach by the said agreement or by reason of the contractor(s) failure to perform the said agreement. Any such demand made on the Bank shall be conclusive as regards the amount due and payable by the Bank under this Guarantee. However, our liability under this Guarantee shall be restricted to an amount not exceeding Rs ……

4. We undertake to pay Purchaser and money so demanded notwithstanding any dispute or disputes by the contractor(s) / supplier(s) in any suit or proceedings pending before any court of tribunal relating thereto, our liability under this present being absolute and unequivocal. The payment so made by us under this Guarantee shall be valid discharge of our liability for payment thereunder and the contractor(s) shall have not claim against us for making such payment.

5. We …… (Bank) further agree that the guarantee herein contained shall remain in full force and affect during the period that would be taken for the performance of the said Agreement and that it shall continue to be enforceable till all the dues of Purchase under or by virtue of the said Agreement have been fully paid and its claims satisfied or discharges or till Purchaser certifies that the terms and conditions of the said Agreement have been fully and properly carried out by the said contractor(s) and accordingly discharges this guarantee. Provided that if Purchaser together with the Contractor seeks an extension of terms of the Guarantee, such extension shall be granted by the Bank and the guarantee shall be in full force till the expiry of such extended period.

6. We …… (Bank) further agree with Purchaser that Purchaser shall have the fullest liberty without our consent and without affecting in any manner our obligations hereunder to vary any of the terms and conditions of the said agreement or to extend time of performance by the said contractor(s) from time to time or to postpone for any time or from time to time any of the powers exercisable by purchaser against the said Contractor(s) and to forebear or enforce any of the terms and conditions relating to the said agreement and we shall not be relieved from our liability by reason of any such variation of extension being granted to the said contractor(s) or for any forbearance, act or omission on the part of Purchaser or any indulgence by Purchaser to the said contractor(s) or by any such matter or thing whatsoever which under the law relating to sureties would but for this provisions, have effect of so relieving us.

7. It shall not be necessary for Purchaser to proceed against the contractor before proceeding against the Bank and the guarantee herein contained shall be enforceable against the Bank notwithstanding any security which Purchaser may have obtained or obtains from the contractor.

8. This guarantee shall not be discharged due to the change in the constitution of the Bank or the contractor(s).

9. We …… (Bank) lastly undertake not to revoke this guarantee during its currency except with the previous consent of Purchase in writing.

10. Our liability is limited to a sum not exceeding Rs …… unless a claim is made on us in writing on or before …… (3 months beyond the date of delivery / completion as specified in the contract) we shall be discharged from liability under this guarantee.

    In witness whereof these presents are executed at, …… on the date, month and year first herein above written.

FOR AND ON BEHALF OF THE BANK WITHIN NAMED

6. BANK GUARANTEE TOWARDS PERFORMANCE BANK GUARANTEE

This Deed of Guarantee executed on..... Day of..... by..... Bank. ..... hereinafter called the "Guarantor" (which term shall mean and include its successors, assigns and legal representatives, where the context so admits) in favour of M/s. UTKARSHA ALUMINIUM DHATU NIGAM LIMITED and registered as a Company under the Companies Act, 1956, having its registered office at P.O. Kanchanbagh, Hyderabad - 500 058, State of A.P. INDIA, hereinafter referred to as the "Purchaser", (which term shall mean and include its successors and assigns).

WHEREAS the Purchase Order No: UADNL/PUR/..... *(Indicate both the order Numbers)* Dated..... has been entered into between the Purchaser and M/s…… a company incorporated and registered under the Laws of ..... by which the company is permitted to manufacture and sell certain products, and having its registered office situated at ..... hereinafter referred to as the SUPPLIER (which term shall mean and include its successors, assigns and legal representatives) for the supply of ..... *(Indicate the list of Items which are replaced/repaired)* as fully described in the aforesaid Purchase Order.

AND WHEREAS it has been agreed under the terms and conditions of the aforesaid Purchase Order that the Purchaser shall make balance payment to the Supplier of .....(amount) in words (.....) representing ***10%*** of the total value of the repaired and replaced parts in the Purchase Orders on final acceptance of the ..... and on furnishing a Guarantee from a Bank acceptable to the Purchaser by the Supplier towards satisfactory performance of the ..... supplied.

AND WHEREAS the Guarantor has, as per the terms and conditions of the aforesaid Purchase Order, agreed to stand guarantee for the amount of ten per cent of the balance payment in favour of the Supplier and the Guarantor is acceptable to the Purchaser.

NOW THIS DEED witnesses that, in pursuance of the terms and conditions of the aforesaid Purchase Order and in consideration of the payment of ..... representating ***10%*** of the total value of the repaired and replaced parts in the Purchase Orders agreed to be made to the Supplier by the Purchaser, the Guarantor do hereby agree and undertake to indemnify the Purchaser and keep the purchaser indemnified to the extent of a sum not exceeding the said sum of ..... (Amount) (In Words .....) against any damage or loss that may be suffered by the Purchaser by reason of non-fulfillment of or breach any of the terms and conditions of the Purchase Order by the supplier, and the guarantor hereby undertaken to pay on demand and without any demur to the purchaser any sum unconditionally and irrevocably not exceeding the sum of ..... (Amount) (In Words ..... as may be demanded by the Purchaser's General Manager (Commercial) or Representative of the purchaser as the damages or loss that the purchaser may have suffered by reasons of non-fulfillment of any of the terms and conditions of the Purchase Order by the Supplier, and Guarantor hereby covenants with the Purchaser as follows:

1. That the decision of the General Manager (Commercial) or Representative of the Purchaser as to whether the said installation under the Purchase Order gives satisfactory performance or not and as to the amount of damages suffered by the Purchaser on account of the unsatisfactory performance of the said installation under the Purchase Order shall be conclusive, final and binding on the Bank.

2. That the Guarantee herein contained shall remain in full force and effect till the Purchaser certifies in writing that the terms and conditions of the said Purchase Order have been fully and properly carried out by the said Supplier and accordingly discharges the Guarantee. Unless a demand for claim under this Guarantee is made on the Bank in writing on or before ....., the Bank shall be discharged from all liabilities under this Guarantee thereafter, provided that if the Purchaser, together with the Supplier, seeks an extension of the term of the Guarantee, such extension shall be granted by the Bank and the Guarantee shall be in full force and effect till the expiry of such extended period.

3. That the Purchaser shall have the fullest liberty, without affecting in any way the liability of the Bank under this Guarantee or Indemnity, from time to time to vary any of the terms and conditions of the said Purchase Order or to extend its performance by the said Supplier as provided or to postpone, for any time and from time to time, any of the powers exercisable by it against the said Supplier and either to enforce or forbear from enforcing any of the terms and conditions governing the said Purchase Order, and the said Bank shall not be released from its liability under these presents by any exercise by the Purchaser of the liberty with reference to matters aforesaid or by reason of time being given to the said Supplier or any other forbearance, act or omission on the part of the Purchaser or any indulgence by the Purchaser to the said Supplier or of any other matter or thing whatsoever which, under the law relating to sureties, would, but for this provision, have the effect of so releasing the Bank from its liability.

4. It shall not be necessary for the Purchaser to proceed against the Supplier before proceeding against the Bank and the Guarantee herein contained shall be enforceable against the Bank notwithstanding any security which the Purchaser may have obtained or obtain from the Supplier.

5. The Bank lastly undertakes not to revoke this Guarantee during its currency, except with the previous consent of the Purchaser in writing, and agrees that any change in the constitution of the said Supplier or the said Bank shall not discharge the Bank's liability hereunder.

In witness whereof these presents are executed at ..... the date, month and year, first herein above written.

FOR & ON BEHALF OF THE BANK WITHIN NAMED

Annexure- 4

MEMORANDUM OF AGREEMENT (CONSORTIUM AGREEMENT)

(***On Non-Judicial Stamp Paper of appropriate value***)

THE BID FOR design, engineering, manufacture, supply, transportation, unloading, storage, In-plant transportation to site from stores, civil and structural works, erection, testing & commissioning, stabilization and performance guarantee …… inclusive of all facilities within the battery limits on total turnkey basis for **UADNL, ----Plant** (hereinafter referred to as "**Employer**") (Refer; Document No. ……)

THE COMPANIES:

……, a company organized and established under the laws of …….., having its Registered office at ……. / …….., (hereinafter referred to as "……..");

AND

……, a company organized and established under the laws of …….., having its Registered office at ……. / …….., (hereinafter referred to as "……..");

AND

……, a company organized and established under the laws of …….., having its Registered office at ……. / …….., (hereinafter referred to as "……..");

(hereinafter referred to individually as "PARTY" and collectively as "PARTIES" and as "Consortium") have entered into the following Consortium Agreement (the "AGREEMENT") on this ……..day of ……, 20...

WHEREAS

The **Employer** has issued to the said Consortium the Document No. …… dated …….. for the design, engineering work, structures & equipment, fabrication & supply of steel structures, manufacture & supply of plant & equipment and refractories, intermediate storage, insurance & handling, erection work, testing, pre-commissioning, start-up & commissioning and demonstration and establishment of performance guarantee parameters of a …… inclusive of all facilities within the battery limits on divisible turnkey basis for **UADNL, ----Plant** (hereinafter referred to as "PROJECT"); and

WHEREAS

a) ……. has proven technology, know-how, design and engineering experience in supply of new/rebuilt …… and more

b) …….. has expertise in engineering, supply of equipment and supervision of erection/commissioning of new/rebuilt …….. Plants;

c) …….. has a proven track record in design and engineering as well as established credentials in supply of equipment and execution of entire civil and structural works, erection and commissioning for new/rebuilt ……;

d) …… shall be the Leader of this Consortium for the PROJECT 'having **maximum share of work in value terms'/ "**being the Technology supplier and having **minimum….. % of job or share of work in value terms".** (Strike out as per stipulations at BDS)

e) The percentage of scope of work to be carried out by each member in terms of value of the contract is as follows:

S.No.	Name of the Party/ Member of Consortium	%of scope of work in value terms
1.	……	……..
2.	……..	……..
3.	……	…….

f) The PARTIES meet the eligibility criteria for …… Package as per **Employer's** Tender Notice Document No. ……., dated ……..;

g) The PARTIES shall coordinate their offers in such a way that they will jointly fulfill the requirements of the **Employer** and may be awarded with the contract for execution of the design & engineering work, structures & equipment, fabrication & Supply of steel structures, manufacture & supply of plant & equipment and refractories, intermediate storage, insurance & handling, erection work, testing, pre-commissioning, start-up & commissioning and demonstration & establishment of performance guarantee parameters for …… inclusive of all facilities within the battery limits on divisible turnkey basis (hereinafter referred to as "CONTRACT").

NOW THEREFORE, the PARTIES witnessed as follows:

1. The PARTIES, each having his own expertise and each as a separate legal entity, shall join their efforts in order to make the Consortium the successful bidders for award of the CONTRACT and execution of the PROJECT.

   The PARTIES appoint ……..as the Consortium leader.

2. Leader of the consortium shall be overall responsible for the execution of the Contract. The Leader and other Members of the Consortium shall be jointly and severally responsible and liable for the execution of the Contract, but will be liable for damages in proportion of the respective Contract Price (In case of successful bidding and CONTRACT award) in accordance with the CONTRACT terms.

3. Notwithstanding the provisions of being jointly and severally liable to Employer by all members of consortium, the leader of consortium shall be primarily responsible for full execution of the entire "Scope of work" of this tender/Contract, so that the UADNL, ------- Plant gets the facilities completed in time in all respect.

4. Leader of this Consortium is only authorized for exchange of correspondence with UADNL, ------- Plant and shall be responsible for it. Such correspondence exchanged between UADNL, ------- Plant and Leader shall be binding on all Consortium Members.

5. Leader of this Consortium shall undertake full responsibility for performance of the contract as per terms and conditions of the contract agreement and PARTIES confirm its full commitment to the Leader for execution of its respective scope of work with full responsibility. PARTIES further agree that in case one or more member of this consortium repeatedly neglects to perform its respective scope, the Leader shall

be authorized to take over the balance scope of work from the defaulting member and complete it at cost to the defaulting member.

6. Leader of this Consortium shall take the overall responsibility of project management of entire project. However, each PARTY shall remain responsible towards the other PARTY for its respective scope of work for its actions and deficiencies.

7. The PARTIES undertake to co-operate with each other according to the principles of good faith and to refrain from acting in any way that may contravene the aims and objectives of this AGREEMENT and to make every reasonable effort in order to prevent or minimize any possible disadvantages for the other PARTY. The cooperation of the PARTIES under the AGREEMENT is on mutual exclusive basis.

   Therefore, no PARTY shall in any way - whether directly or indirectly - cooperate with any new person, company or firm (whether it is a competitor of the PARTIES or not) for the subject matter of this AGREEMENT. However, Leader of this Consortium shall be responsible for resolving any disputes/ misunderstanding / undefined activities etc., if any, amongst all the members of the Consortium.

8. The respective preliminary scope of work of each PARTY is described in Technical offer(s),

9. Each PARTY shall bear its costs, it incurs for the offer preparation and in case of award each PARTY shall be fully responsible and liable for the complete performance of its respective scope of work according to the CONTRACT and this AGREEMENT. This includes but is not limited to the respective liability of a PARTY under the CONTRACT and under this AGREEMENT and each PARTY's liability for damages from its non-performance, defective, faulty or delayed performance, whether of a PARTY itself or its sub-contractors as per the provisions of the CONTRACT.

   Each PARTY shall obtain and provide all necessary bank guarantees / bonds required according to the CONTRACT with respect to its specified Scope of Work and shall bear all related costs, charges and risks as shall be agreed in the CONTRACT.

10. Any dispute, which may arise at any time out of this AGREEMENT and any subsequent amendment or in connection with the same shall be finally settled under the Rules of Arbitration of the International Chamber of Commerce (ICC) by an arbitration panel to be appointed according to the said Rules. The venue of the Arbitration shall be in …….., the language of the proceedings shall be English.

11. This AGREEMENT shall become effective upon signature by the PARTIES and shall remain in full force and effect until all obligations, liabilities and warranties undertaken / given by the PARTIES in connection with the present AGREEMENT have been settled.

    In case of CONTRACT award, a separate Consortium Agreement for execution of the PROJECT will be concluded.

12. This AGREEMENT may be terminated by either PARTY with immediate effect by written notice to the other PARTY if:

    - the other PARTY is declared insolvent or bankrupt or If a liquidator or receiver Is appointed to that PARTY, or if an event happens that has a similar effect; or

- the CONTRACT is not awarded to the PARTIES by the **Employer** or if the **Employer** abandons the PROJECT or if the **Employer** awards the contract to a third party other than the PARTIES hereto.

13. Modifications and supplements to this AGREEMENT require mutual agreement between all PARTIES and must be in writing in order to be effective.

14. None of the PARTIES shall have the right to introduce a new party or Consortium member or to assign or in any way transfer any of its rights or obligations under this AGREEMENT to any other company, firm or person without first obtaining the consent in writing of the other PARTIES.

15. The role and responsibility of each member (Division of Work) is enclosed.

Signed on this …… day of ...(month)... of the year of …… by the authorised representatives of

_____

…….

Annexure- 5

Draft LC Format

All tenderers are requested to fill in/tick appropriate fields inline with the tender terms and conditions. The same shall be finalised with the successful tenderer upon placement of Order/Contract and submission of Security Deposit (No separate confirmation shall be obtained after placement of PO/Contract. If LC is opened only for partial amount, approriate conditions in 46A shall only be applicable.

	Receiver Bank Details:			
27	Sequence of Total	1/1		
40A	Type of L/C	[ ] Irrevocable	[ ] Irrevocable & Transferable	
20	Letter of Credit Number			
31C	Date of Issue			
31D	Date and Place of Expiry	**Date: _____** ***(21 Days after the Date of Dispatch)***	Place	
50	Name and Address of the Applicant	Utkarsha Aluminium Dhatu Nigam Limited (UADNL) KANCHANBAGH POST 500 058, HYDERABAD TELANGANA, INDIA		
59	Name and Address of the Beneficiary			
32B	Currency & Amount of L/C (In Words & Figures)	***(Shall be filled in as per the PO/Contract)***		
39A	Variations in L/C Amount or addl. Amounts permitted			
C				
41A	Credit available with			Name and Address of the Bank
	Credit available by	[ ] Payment **[v]Negotiation** [ ] Acceptance [ ] By Deferred payment		
42C	Usance of Drafts	**[v] at Sight** [ ] (specify)		
42B	Drafts to be drawn on	----------	Or	----------
42P	Deferred Payment, if any			
43P	Partial Shipments	**[ ] permitted [ ] prohibited**	43T	Transhipment: [ ] permitted [ ] prohibited
44A	Shipments from		44B	
44E	Port of Loading/ Airport of Departure			
44F	Port of Discharge/Airport of Destination	---------- India		
	Final Place of Destination for Sea Shipments	----------		
44C	Latest Shipment Date	**(Shall be filled in as per the PO/Contract inline with Tender delivery condition)**		
45A	Description of Goods (Also indicate whether FOB/CIF/C&F etc.)			
46A	Documents required			
	Stage - I: 10% Payment	Ten (10) percent of the Contract price for supplies i.e., _____ **(Shall be filled as per PO/Contract)** against presentation of the following documents		
	[ ]	Signed Contract Copy		

	[ ]	Submission of Security Deposit for 10% Order Value i.e., _____ from a Nationalized Bank/ Scheduled Commercial Bank encashable at Hyderabad, INDIA valid till successful completion of the Order/Contract and issue of PAC with additional claim period of three months from the date of expiry
	[ ]	Submission of invoice in triplicate and Submission of Bank guarantee of similar amount from a Nationalized Bank/ Scheduled Commercial Bank encashable at Hyderabad, INDIA for advance payment along with 12% interest per annum valid till supply of Last lot, with additional claim period of three months from the date of expiry
	Stage - II: 10% Payment against Drawings/Documents	Ten (10) percent of the Contract price for supplies i.e., _____ **(Shall be filled as per PO/Contract)** against presentation of the following documents
	[ ]	Submission of invoice in triplicate
	[ ]	Submission of Bank guarantee of similar amount from a Nationalized Bank/ Scheduled Commercial Bank encashable at Hyderabad, INDIA for advance payment along with 12% interest per annum valid till PAC.
	[ ]	Furnishing of the documents and drawings as per 'Technical Specifications'
	Stage - III *(60% of Payment shall be as per Tender conditions)* :	Sixty (60) percent of the Contract price for supplies i.e., _____ **(Shall be filled as per PO/Contract)** is payable against shipment of the material and against presentation of the following documents.
	[ ]	Clean on Board Bill of Lading/Airway Bill as defined in Incoterms 2010 made to Order and blank endorsed
	[ ]	Signed Invoice for the goods dispatched. - 4 copies
	[ ]	Certificate of Origin. – 2 copies
	[ ]	Packing List. – 5 copies
	[ ]	Guarantee Certificate – 4 copies
	[ ]	Test / Manufacturer's Certificate – 4 copies
	[ ]	Fax intimation particulars regarding shipment sent to our insurer/Insurance Policy Document (In case of CIF)
	[ ]	Dispatch Advise issued by the Purchaser – 4 Copies
	[ ]	Certificate from Beneficiary that one set of non-negotiable documents have been sent to Purchaser/Buyer as per
	[ ]	Draft at Sight/ _____ Days acceptance for _____% of Invoice Value
		Phitosanitary Certificate: In case of wooden packing only. (one original and 5 copies)
	Stage - IV *(10% of Payment shall be as per Tender Conditions)*	Ten (10) percent of the Shipment Value I.E., _____ **(Shall be filled as per PO/Contract)** is payable against presentation of the following documents.
	[ ]	Provisional Acceptance Certificate issued by UADNL
	[ ]	Submission of invoice in triplicate
	[ ]	Certificate issued by Purchaser on "Site cleaning"
	Stage - V *(10% of Payment shall be as per Tender Conditions)*	Ten (10) percent of the Shipment Value I.E., _____ **(Shall be filled as per PO/Contract)** is payable against presentation of the following documents.
	[ ]	Certificate from purchaser that all drawings and documents as given in Clause No. 17.0 of General Conditions of Contract have been received and accepted.
	[ ]	Submission of invoice in triplicate
	[ ]	Final Acceptance Certificate issued by UADNL
		OR
	[ ]	Performance Bank Guarantee for TEN PERCENT Order Value till completion of Guarantee Period as per Tender.
47A	Additional Conditions	
	[ ]	All documents must mention the LC Number, Date, Purchase Order number and Date and that the Goods are being Imported as per Foreign Trade Policy 2015-2020.
	[ ]	Immediately after negotiating, the Negotiating Bank must advise the particulars of the Negotiation to the Issuing bank.
	[ ]	All documents which are incomplete and or with irregularities should not be negotiatied without prior authorisation of the purchaser.
	[ ]	All Documents dated prior to the Date of Letter of Credit will be accepted except the Transport Document i.e., Bill of Lading/Air Way Bill.
	[ ]	Total Value of the Contract Price is _____. LC opened for ___ Percent of Contract Price i.e., _____.
71B	Charges	All Charges inside India to Applicant's Account (UADNL's) and all charges outside India to Beneficiary's Account
48	Period of Presentation	Documents to be presented within 21 days from the date of shipment/airfreight as the case may be
49	Confirmation Instructions	Without
78	Instructions to the Paying bank	*Standard wording from our Bank shall be added here*

ANNEXURE-6

Self Certification and Undertaking by Bidder (by each member if bid is by a Consortium) regarding Insolvency/Liquidation Process under NCLT

(on non-judicial stamp paper of appropriate value)

To,

UADNL

(Name & Address of the Employer)

Sub: Tender for..... - Submission of Undertaking by.....

Ref: Invitation for Bid No.....Dt.....

Dear Sir,

The undersigned hereby certifies that no corporate insolvency resolution/liquidation process has commenced in respect of the bidder herein as on the date of submission of tender documents pertaining to the above referred Invitation for Bid.

We undertake to inform UADNL as soon as any corporate insolvency resolution/liquidation process, is initiated against us.

Thanking you,

Yours sincerely,

Annexure-7

BIDDERS SHALL SUBMIT COMPLIANCE OF THE CLAUSES GIVEN BELOWIN THEIR OFFER.

This is as per office OM F.No.6/18/2019-PPD dated 23rd July 2020 inserting Rule 144 (xi) in the General Finance Rules (GFRs) 2017 by "Department of Expenditure, Public Procurement Division, Ministry of Finance".

I. Any bidder from a country which shares a land border with India will be eligible to bid in this tender, only if the bidder is registered with the Competent Authority. Competent authority for the purpose of registration shall be the Registration Committee constituted by the Department for Promotion of Industry and Internal Trade (DPIIT).

II. "Bidder" (including the term 'Tenderer', 'Bidder', 'Contractor', 'Consortium' or 'Service Provider' in certain contexts) means any person or firm or company, including any member of a consortium or joint venture (that is an association of several persons, or firms or companies), every artificial juridical person not falling in any of the descriptions of bidders stated hereinbefore, including any agency branch or office controlled by such person, participating in a procurement process.

III. "Bidder from a country which shares a land border with India" for the purpose of this Order means:

a. An entity incorporated, established or registered in such a country; or

b. A subsidiary of an entity incorporated, established or registered in such a country; or

c. An entity substantially controlled through entities incorporated, established or registered in such a country; or

d. An entity whose beneficial owner is situated in such a country; or

e. An Indian (or other) agent of such an entity; or

f. A natural person who is a citizen of such a country; or

g. A consortium or joint venture where any member of the consortium or joint venture falls under any of the above

IV. The beneficial owner for the purpose of (III) above will be as under:

1. In case of a company or Limited Liability Partnership, the beneficial owner is the natural person(s), who, whether acting alone or together, or through one or more juridical person, has a controlling ownership interest or who exercises control through other means.

Explanation -

a) "Controlling ownership interest" means ownership of or entitlement to more than twenty-five per cent of shares or capital or profits of the company;

b) "Control" shall include the right to appoint majority of the directors or to control the management or policy decisions including by virtue of their shareholding or management rights or shareholders agreements or voting agreements;

2. In case of a partnership firm, the beneficial owner is the natural person(s) who, whether acting alone or together, or through one or more juridical person, has ownership of entitlement to more than fifteen percent of capital or profits of the partnership;

3. In case of an unincorporated association or body of individuals, the beneficial owner is the natural person(s), who, whether acting alone or together, or through one or more juridical person, has ownership of or entitlement to more than fifteen percent of the property or capital or profits of such association or body of individuals;

4. Where no natural person is identified under (1) or (2) or (3) above, the beneficial owner is the relevant natural person who holds the position of senior managing official;

5. In case of a trust, the identification of beneficial owner(s) shall include identification of the author of the trust, the trustee, the beneficiaries with fifteen percent or more interest in the trust and any other natural person exercising ultimate effective control over the trust through a chain of control or ownership.

V. An Agent is a person employed to do any act for another, or to represent another in dealings with third person.

VI. The successful bidder shall not be allowed to sub-contract works to any contractor from a country which shares a land border with India unless such contractor is registered with the Competent Authority. The definition of “contractor from a country which shares a land border with India” shall be as in paragraph III above.

VII. Validity of Registration: Registration should be valid at the time of submission of bids and should be valid at the time of placement of order.

VIII. The above provisions will not be applicable to bidders from those countries (even if sharing a land border with India) to which the Government of India has extended lines of credit or in which the Government of India is engaged in development projects (as per list given in the website of the Ministry of External Affairs).

IX. The bidder shall submit a certificate/ undertaking for compliance with regard to above as given at **Appendix-1** to **Annexure-10**.

Any false declaration and non-compliance of the above would be a ground for immediate rejection of offer or termination of the contract and further legal action in accordance with the laws.

****

Appendix-1 to ANNEXURE-7

CERTIFICATE/ UNDERTAKING FOR COMPLIANCE WITH REGARD TO GUIDELINES GIVEN AT ANNEXURE-7

(by each member if bid is by a Consortium)

Date:……..

To

The UADNL

……..

……...

Sub: **Tender for …… - Submission of Certificate/Undertaking by ……**

Ref: ……

Dear Sirs,

A. (as the case may be)

We have read and understood the clauses given at Annexure-10. We hereby certify that we are not included under any of the clauses appearing in the guidelines at Annexure-10 and we are eligible to quote for this tender.

OR

We have read and understood the clauses given at Annexure-7. We hereby certify that we are eligible to quote for this tender, based on registration with the Competent Authority. The validity of the registration is upto _____ and this shall be kept valid at the time of placement of order (if any). A copy of the registration issued by Competent Authority, duly notarized is attached herewith.

B. We hereby certify and undertake that in case of becoming successful bidder, we shall mandatorily comply with clause VI of the guidelines at Annexure-7.

C. We hereby confirm and accept that any false declaration and non-compliance of the clauses given in Annexure-7 would be a ground for immediate rejection of our offer or termination of the contract and further legal action in accordance with the laws.

Dated this _____ day of, 20... _____ *[signature]*

In the capacity of _____*[position]*

Duly authorised to sign this bid for and on behalf of _____*[name of bidder]*

Note: The above Certificate in Original shall be submitted in the letterhead of the bidder and signed by the Power of Attorney holder, who is authorized to sign the bid documents

ANNEXURE – 8

PREFERENCE TO MAKE IN INDIA AND GRANTING OF PURCHASE PREFERENCE TO Class-I LOCAL SUPPLIERS

It is the policy of the Government of India to encourage 'Make in India' and promote manufacturing and production of Goods and Services by sourcing goods and services applicable under the contract / package from domestic suppliers / service providers with a view to enhancing income and employment in India. In this regard, Bidder shall also follow guidelines / advisory issued by Government of India from time to time, to the extent applicable to them, regarding promotion of local sourcing of goods including Bought out Items and services.

For this Tender, Public Procurement (Preference to Make in India), Order 2017 dated 15.06.2017, 28.05.2018, 29.05.2019, 04.06.2020,16.09.2020 and subsequent orders/amendments/revisions issued by the respective Nodal Ministry shall be applicable even if issued after issuance of the NIT but before finalization of contract against this NIT. In the event of any Nodal Ministry prescribing higher or lower percentage of purchase preference and / or local content in respect of this procurement, same shall be applicable. Bidders are requested to comply with the above mentioned orders.

The following guidelines, concerning the procedure to be adopted for granting purchase preference to local suppliers, are hereby issued:

1.0 Definitions:

a) **'Local content'** means the amount of value added in India which shall, unless otherwise prescribed by the Nodal Ministry be the total value of the item procured (excluding net domestic indirect taxes) minus the value of imported content in the item(including all customs duties) as a proportion of the total value, in percent.

b) **'Class-I local supplier'** means a supplier or service provider, whose goods, services or works offered for procurement, meets the minimum local content as prescribed for ' Class-I local supplier' under this order.

c) **'Class-II local supplier'** means a supplier or service provider, whose goods, services or works offered for procurement, meets the minimum local content as prescribed for ' Class-II local supplier' but less than that prescribed for 'class-I local supplier' under this order

d) **'Non - Local supplier'** means a supplier or service provider, whose goods, services or works offered for procurement, has local content less than that prescribed for 'Class-II local supplier under this Order.

e) **'L1'** means the lowest tender or lowest bid or the lowest quotation received in a tender, bidding process or other procurement solicitation as adjudged in the evaluation process as per the tender or other procurement solicitation.

f) **'Margin of purchase preference'** means the maximum extent to which the price quoted by a "Class-I local supplier" may be above the L1 for the purpose of purchase preference.

g) **'Nodal Ministry'** means the Ministry or Department identified pursuant to this order in respect of a particular item of goods or services or works.

h) **'Procuring entity'** means a Ministry or department or attached or subordinate office of, or autonomous body controlled by the Government of India and includes Government companies as defined in the Companies Act.

i) **'Works'** means all works as per Rule 130 of GFR-2017 and will also include 'turnkey works'.

2.0 Minimum local content.

2.1 The prescribed minimum local content for Class-I local supplier and Class-II local supplier is 50% and 20% respectively.

3.0 Class-I local supplier, Class-II local supplier and Non-local supplier are eligible to bid in this Global tender.

4.0 Margin of Purchase Preference

4.1 The margin of purchase preference shall be 20%.

5.0 Purchase Preference

5.1 The Subject package is not divisible in nature and cannot be awarded to multiple bidders. As such the Class-I local supplier shall get purchase preference over 'Class-II local supplier' as well as Non-local supplier' as per following procedure:

i) Among all qualified bids, the lowest bid will be termed as L1. If L1 is 'Class-I local supplier', the contract will be awarded to L1.

ii) If L1 bid is not 'Class-I local supplier', the lowest evaluated bidder among the Class-I local suppliers, will be invited to match the lowest evaluated bid (L1) price subject to Class-I local supplier's evaluated bid price falling within the margin of purchase preference and the contract shall be awarded to such Class-I local supplier subject to matching the lowest evaluated bid (L1) price.

iii) In case such lowest eligible Class-I local supplier fails to match the lowest evaluated bid (L1) price, the Class-I local supplier with the next higher evaluated bid within the margin of purchase preference shall be invited to match the lowest evaluated bid (L1) price and so on and contract shall be awarded accordingly. In case none of the Class-I local suppliers within the margin of purchase preference matches the lowest evaluated bid (L1) price, then the contract may be awarded to the L1 bidder.

iv) "Class-II local supplier" will not get purchase preference in any procurement undertaken by procuring entities.

6.0 Verification of Local Content:

6.1 The 'Class-I local supplier'/ 'Class-II local supplier' at the time of bidding shall be required to indicate percentage of local content and provide self certification [as per format provided in Attachment-1 to Annexure-8 of Section -VII] that the Item offered meets the local content requirement for 'Class-I local supplier'/ 'Class-II local supplier', as the case may be. They shall also give details of the location(s) at which the local value addition is made.

6.2 The 'Class-I local supplier'/ 'Class-II local supplier' shall be required to provide a certificate from the statutory auditor or cost auditor of the company (in the case of companies) or from a practicing cost accountant or practicing chartered accountant (in respect of suppliers other than companies) giving the percentage of local content as per the format provided in Attachment -2 to Annexure-8 of Section-VII.

6.3 False declarations/ certification will be in breach of the Code of Integrity under Rule 175(1)(i)(h) of the General Financial Rules for which a bidder or its successors can be debarred for up to two years as per Rule 151 (iii) of the General Financial Rules along with such other actions as may be permissible under law.

6.4 A supplier who has been debarred / banned by any other procuring entity for violation of 'Public Procurement (Preference to Make in India), Order 2017' (PPP-MII Order) dated 15.06.2017 and its subsequent revisions / amendments issued by Department of Industrial Policy and Promotion (DIPP) shall not be eligible for preference under the aforesaid procedures for duration of the debarment. Self-certification in this regard shall be submitted as per Attachment-1 to Annexure-14

ATTACHMENT - 1 TO ANNEXURE-8

Self certification on Local Content

We have read the provisions of Public Procurement (Preference to Make in India), Order 2017 dated 15.06.2017, 28.05.2018, 29.05.2019,04.06.2020,16.09.2020 and subsequent orders/revisions/amendments issued by the respective Nodal Ministry. In terms of the requirement of the aforesaid provisions, we hereby declare the following:

1.0 We confirm that we are a Class-I Local Supplier / Class-II Local Supplier, and the local content included in the package is min. ____% of our total offered price for complete scope of work for Tender Enquiry No._____ dated_____.

2.0 Further, we hereby confirm the following:

Whether the bidder is presently debarred / banned by any other procuring entity for violation of 'Public Procurement (Preference to Make In India), Order 2017' (PPP-MII Order) dated 15.06.2017 issued by Department of Industrial Policy and Promotion (DIPP) and its subsequent orders/amendments/revisions.	Yes / No

3.0 We agree to furnish any information as a proof of the above to your satisfaction as and when required.

Yours truly,

Date …….

Place …….

Signature.....

Name……

Designation …….

Name of Bidder

Seal…….

ATTACHMENT - 2 TO ANNEXURE-8

FORMAT FOR CERTIFICATION OF LOCAL CONTENT (LC) FOR SERVICES OR WORKS

[Certificate to be provided by local supplier from the Statutory Auditor or Cost Auditor of the company (in the case of companies) or from a practicing Cost Accountant or practicing Chartered Accountant (in respect of local suppliers other than companies)

Tender Ref. No: Date:

I < name of Statutory Auditor/Cost Auditor/ practicing Cost Accountant/practicing Chartered Accountant > do hereby certify that < name of authorized signatory of bidder> S/o, D/o, W/o _____, Resident of _____ has solemnly affirmed and declared as under:

That the percentage of local content considered by _____ for the total scope of works against the subject tender Ref. No._____ is min. _____%.

That he/she agreed to abide by terms and conditions of Department of Industrial Policy & Promotion issued vide Notification No: P-45021/2/2017-B.E.-II dated: 15-06-2017 & P-45021/2/2017-PP (BE-II) dated: 28-05-2018 and subsequent orders/amendment/revisions issued by the respective Nodal Ministry.

That the information furnished hereinafter by him/her is correct to best of my knowledge and belief and I undertake to produce relevant records before the procuring entity or any other authority so nominated by the Government of India for the purpose of assessing the Local Content.

That the LC for all inputs which constitute the said Product/Services/Works has been verified by me and I am responsible for the correctness of the claims made therein.

That in the event of the LC of the Product/ Services/ Works mentioned herein is found to be incorrect and not meeting the prescribed LC norms, based on the assessment of an authority so nominated by the Government of India and he/she will be liable as under clause 9 (f) of **Public Procurement (Preference to Make in India) order 2017** and subsequent orders/amendments/revisions issued by the respective Nodal Ministry**.**

For and on behalf of _____ <Name of Statutory Auditor/Cost Auditor/ practicing Cost Accountant/practicing Chartered Accountant>

Stamped & signed by Authorized signatory

<Insert Name, Designation and Contract No and date>

(to be furnished inCompany's letter head of the bidder)

उत्कर्ष UTKARSHA

(A Joint Venture Company of NALCO and MIDHANI)

UTKARSHA ALUMINIUM DHATU NIGAM LIMITED

PO-KANCHANBAGH, HYDERABAD, TELANGANA – 500 058, INDIA

INSTALLATION OF HIGH END ALUMINIUM ALLOY MELTING, CASTING AND FLAT ROLLED PRODUCTS PRODUCTION FACILITY AT NELLORE, ANDHRA PRADESH

TENDER SPECIFICATION

FOR

HIGH END ALUMINIUM ALLOY MELTING AND CASTING PLANT
(PACKAGE NO. – 01)

मेकॉन MECON ISO 9001 Company

VOLUME – II OF II
(TECHNICAL)

MECON LIMITED
RANCHI – 834002

MEC/UADNL/11/35/Q7R6/TS/01/R0 **June, 2022**

CONTENT

Chapter No.	Description	Page No.	
		From	To
01.	Introduction	1	2
02.	Intent of Specification	1	4
03.	General description of the plant	1	4
04.	Site Condition and Design Data	1	3
05.	Special instructions to Tenderers	1	3
06.	Safety	1	1
07.	Scope, Battery limits and Exclusions	1	11
08.	Regulation and Standards	1	2
09.	Production Programme	1	2
10.	Technical Specification of facilities	1	51
10.01	Technological Facilities	1	1
10.01.1.A	Melting & Alloying Unit	1	6
10.01.1.B	Holding Furnace	6	18
10.01.1.C	Vertical Direct Chill Casting Facility	18	44
10.01.1.D	Homogenising Unit	45	46
10.01.1.E	Scalping Machine	46	47
10.01.1.F	Band Sawing Machine	47	48
10.01.1.G	Chips Collection System	48	49
10.01.1.H	Ultrasound Inspection System	49	51
10.02	Material Handling Facilities	1	1
10.03	Refractories	1	10
10.04	Utilities (Gas Facilities)	1	2
10.05	Air-conditioning and Ventilation System	1	1
10.06	Water Supply System	1	8
10.07	Electrics and Automation	1	76
10.08	Instrumentation	1	11
10.09	Quality Control Facilities	1	2

© 2022 MECON LIMITED. All rights reserved

Chapter No.	Description	Page No.	
		From	To
10.10	Fire Protection system	1	1
10.11	Pollution Control	1	1
10.12	Hydraulics and Lubrication System	1	24
10.13	Civil Works	1	3
10.14	Structural Works	1	2
11.	Spares, Consumables and Tools & Tackles	1	2
12.	Completeness	1	1
13.	Project Implementation Schedule and Progress Monitoring	1	4
14.	Inspection, Erection, Testing and Commissioning	1	6
15.	Performance Guarantee	1	9
16.	Certification	1	1
17.	Data / Drawings to be furnished by Tenderer	1	4
18.	Time schedule for submission of drawings and documents	1	14
19.	Training of Purchaser personnel	1	4
20.	Painting	1	1
21.	Disaster Management Plan	1	1
22.	Questionnaires	1	13

© 2022 MECON LIMITED. All rights reserved

1.0 Introduction

Utkarsha Aluminium Dhatu Nigam Limited (UADNL), is a Joint Venture (JV) company of M/s National Aluminium Company Limited (NALCO), a Navratna CPSE under Ministry of Mines and M/s Mishra Dhatu Nigam Limited (MIDHANI), a Miniratna CPSE under the Ministry of Defence. This JV Company is incorporated for Setting up a green field project to produce High End Aluminium Alloy Flat Rolled Products at SPSR Nellore district of Andhra Pradesh.

The rated capacity of the Aluminium Alloy Plant shall be 60,000 TPY of different grade Plates, Sheets and Coils at Bodduvaripalem Village, Kodavalur Mandal, SPSR Nellore Distt. in Andhra Pradesh. The overall layout has been planned keeping into consideration of adequate space provision for expanding its future capacity upto 120,000 TPA.

M/s MECON LIMITED has been appointed as EPCM consultant by M/s UADNL for the installation of High end Aluminium Alloy Melting, Slab Casting and further Flat Rolled Products Manufacturing facilities. The project is divided into 2 (two) main technological packages and other different Utilities and service related packages including enabling packages.

This Technical Specification document covers the Package-01 i.e., the Melting, casting, homogenizing and sizing of the cast slabs & billets of different grade Aluminium Alloys which shall be further processed for Rolling into different Flat Rolled Products or other application/products.

The main technological facilities of this proposed package includes the Melting & Holding Furnaces, Direct Chill Casting Machine, Homogenizing Furnaces, Scalping machines and Sawing machines as following:

- 3 x 55t Aluminium Ingot & Scrap Melting Furnace
- 2 x 50t Liquid Aluminium Holding Furnace

© 2022 MECON LIMITED. All rights reserved

- 2 x 50t/cast Vertical Direct Chill Casting Unit
- 4 x 50t Homogenizing Unit
- Set of Scalping & Band Sawing Machine suitable for slabs and billets
- 1 No. Ultrasound Inspection System for slabs & billets

This Technical Specification (TS) has been prepared for Design, engineering, supply, Erection & Commissioning, Initial operation, ramp up production, performance and product guarantee of technological equipment including Electrics & control / automation system, material handling facilities (excluding EOT crane, forklift truck, FTV, hand trolley etc.), utilities facilities within the boundary limits of the shop. The system utilities e.g. Power, water, compressed Air, fuel etc. shall be provided at the defined take over point (TOP) by the purchaser. Detailed scope of work and battery limits has been indicated at Chapter No 07 of this Tech specification. Civil works are excluded from scope of work which shall be executed by the purchaser based on the detailed required inputs provided by the successful bidder. Building Structural works are also excluded from scope of work which shall be executed by the purchaser based on the detailed required inputs provided by the successful bidder. The equipment and all technological structures are to be provided by the bidders.

The technology and equipment supplier shall demonstrate the production of intended aluminum alloys by using the offered line equipment and transfer the alloys making technology including training of the plant operators.

A tentative layout indicating the available space for setting-up the proposed facilities related to this package is provided in the drawing no. MEC/UADNL/11/14/Q7R6/TS/01, Rev0 for reference.

© 2022 MECON LIMITED. All rights reserved

DRG. NO. MEC/UADNL/11/14/Q7R6/PRL/0001, R-0

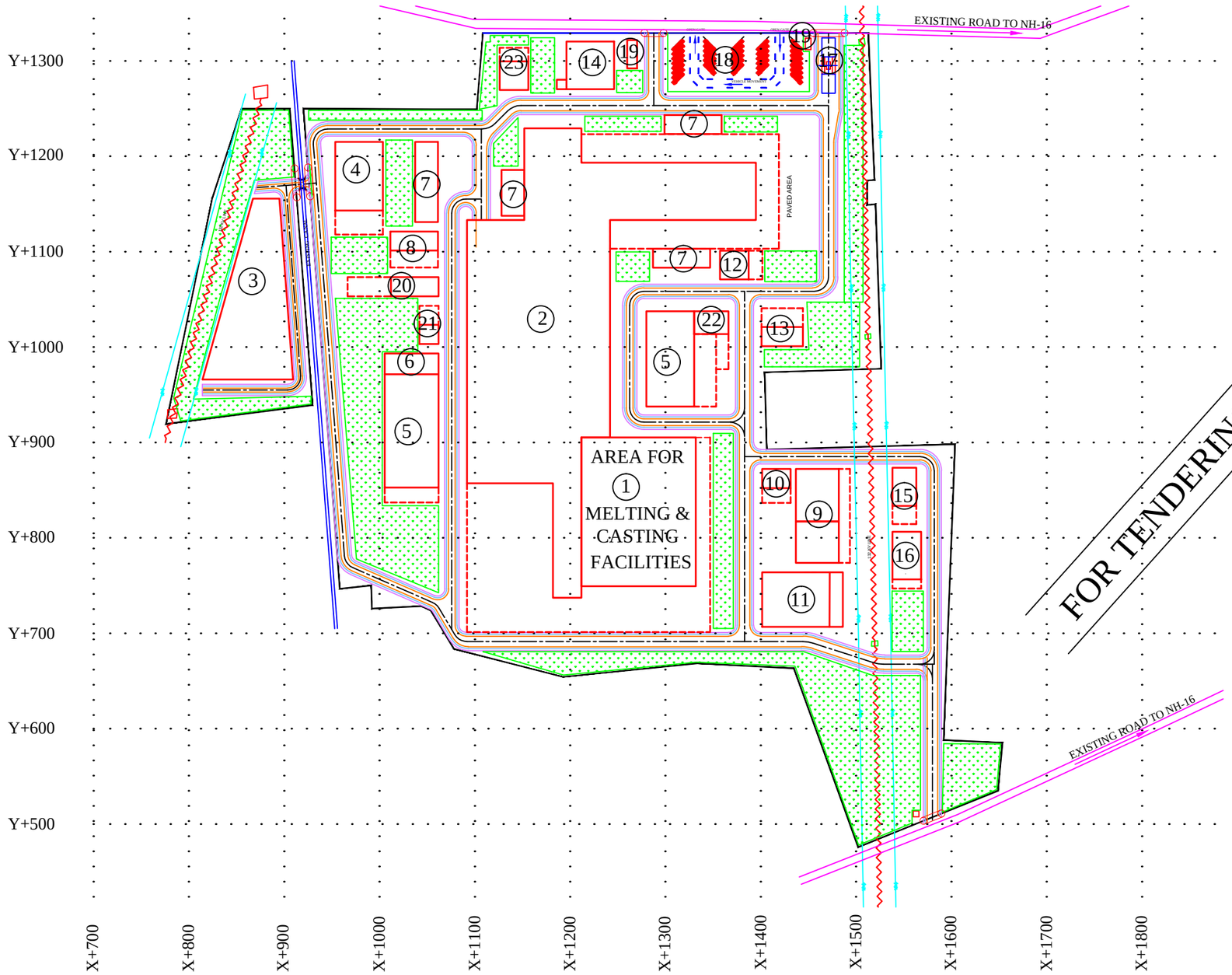

FOR TENDERING PURPOSE ONLY

LIST OF MAJOR UNITS

1. CASTING SHOP
2. HOT & COLD ROLLING MILL SHOP
3. MRSS
4. RAW WATER RESERVOIR
5. WATER SUPPLY FACILITIES
6. FIRE WATER PUMP HOUSE
7. ECR BUILDING
8. SUBSTATION
9. PROPANE STORAGE
10. PSA NITROGEN & ARGON FACILITY
11. RAW MATERIAL STORAGE YARD
12. COMPRESSED AIR STATION
13. LABORATORY BUILDING
14. ADMINISTRATIVE BUILDING
15. CENTRAL REPAIR SHOP
16. DROSS STORAGE
17. ROAD WEIGHBRIDGE
18. TRUCK PARKING AREA
19. SECURITY CUM TIME OFFICE
20. ROLLING OIL STORAGE
21. CENTRAL STORE
22. ZLD PLANT
23. FIRE STATION

SYMBOL LEGEND

- PROPOSED UNITS
- SPACE FOR FUTURE UNITS
- PROPOSED ROAD
- 132 KV HT LINE CORRIDOR
- EXISTING CANAL
- BOUNDARY WALL WITH GATE
- GREEN BELT

PRELIMINARY

100 0 100 200 300 400

SCALE IN METRES

REFERENCES	DRG. NO.

© THIS DRAWING IS THE PROPERTY OF MECON AND IS ISSUED FOR THE SPECIFIC PROJECT MENTIONED THEREIN. THIS IS NOT TO BE COPIED OR USED FOR OTHER PROJECTS UNLESS EXPRESSLY PERMITTED BY MECON

UTKARSHA ALUMINIUM DHATU NIGAM LIMITED

मेकॉन लिमिटेड

MECON LIMITED

SECTION	GL&T
LOCATION	RANCHI
DSGN	RP
DRAWN	RP
CHKD	AKP
APPROVED	

ALUMINIUM ALLOY FLAT ROLLED PRODUCTS PLANT, NELLORE, A.P.

GENERAL LAYOUT (TENTATIVE)

SCALE-	AS SHOWN	SHEET	REV
DATE	DRG. NO. MEC/UADNL/11/14/Q7R6/TS/01	1 OF 1	0

2.0 Intent of Specification

02.01 This technical specification comprising of Aluminium Melting and Casting Facilities along with auxiliaries shall be executed on turnkey basis. The broad scope of work of tenderer covers supply of process technology/Know-how as well as design, engineering and supply of Aluminium Ingot & Scrap Melting Furnace, Liquid Aluminium Holding Furnace, Vertical Direct Chill Casting Unit, Homogenizing Unit, Scalping & Band Sawing Machine, Ultrasound inspection System including electrics & automation, utilities & services within the battery limit, painting, erection, testing, commissioning & demonstration of performance guarantee parameters of the units.

The design & technology selected shall include latest technological developments in the field and state-of-the-art technology and shall ensure achievement of benchmarks in technical, technological, operating parameters, environmental norms at par with International Standards. The melting and casting shop shall be designed and equipped to cast slabs and billets of hard aluminium alloy grades like 2xxx, 5xxx, 6xxx and 7xxx of superior quality applicable for defence, aerospace and other hi-end applications. The plant shall be designed in such a way that all the above grades can be successfully cast on the casting machine and rolled in the rolling mill.

02.02 The overall time schedule for commissioning of the plant & equipment covered under this package shall be 24 months from the effective date of contract.

02.03 The intent of this Specification is to appraise the Tenderer about his involvement / commitment for this package and to enable him to submit a detailed comprehensive offer as specified in this document. The Tenderer shall base his offer on the information contained in this specification.

02.04 The Tenderer shall study the specification along with related documents and satisfy himself thoroughly regarding suitability of the plant and equipment and system, specified in the Tender document and take full responsibility for smooth and trouble free

© 2022 MECON LIMITED. All rights reserved

operation of the plant and equipment with respect to output, reliable working as well as ease of operation and maintenance including replacement with minimum machine down time.

02.05 All equipment / systems shall be completed in all respects and any equipment or accessories not covered in the technical specification but essential for proper design, operation and rated production as per the offered Technology shall be deemed to be included in the scope of the Tenderer.

02.06 It is a green field project, however, the Tenderer may visit the site and satisfy himself before submission of the offer, the nature and location of work place, area available, kind of equipment, facilities, services, etc. needed during actual execution of work, performance of work, general and local conditions as well as all other matters which can, in any way, affect the work covered in this specification.

Deviations from Technical Specification (TS) and standards, if any, shall be brought out clearly with proper justifications. The deviations brought out shall be specific in nature. If the deviations from the technical specification or specified standards are not brought out clearly by the Tenderer, the same will not be considered by the Purchaser, even if, directly or indirectly mentioned in any part of the offer. Tenderer may offer certain alternate system/equipment of improved design, if necessary, with clear justification for the same.

Technical specification is a guideline to the bidders for basic requirement of the project w.r.t the production quantity and quality. Should the tenderer consider that improved equipment features and additional process equipment configuration are beneficial, then they are invited to put forward the same as part of their offer. The perceived technical and / or commercial benefits of the additional features should be highlighted in the offer for review and acceptance. However, for evaluation of L1 bidder, cost implication will not be considered for the offered additional features.

© 2022 MECON LIMITED. All rights reserved

02.07 Effort shall be made by the Tenderer to maximize equipment / supplies from indigenous sources.

02.08 The Tenderer shall be responsible for co-ordinating the supplies covered in the different areas of this Specification from different sources and execute the contract within agreed time schedule.

02.09 The specification intends that the plant and equipment supplied by the Tenderer shall be capable to cast special quality slabs to be rolled in form of plate, sheet and coils as well as billets to be used suitably in the application like Defence, Aerospace, Automotive, Railway, Marine, Machinery & Equipment etc. The Tenderer has to clearly specify in the Tender how the process know-how and production of these special quality slabs and billets to be cast shall be transferred to the Purchaser.

02.10 All the equipment and supplies shall be suitable for the tropical climatic conditions prevailing at Aluminium Alloy Plant, Bodduvaripalem Village, Kodavalur Mandal, SPSR Nellore Distt. in Andhra Pradesh, India.

The Technical Specification (TS) shall be read in conjunction with the following standard bidding documents of Purchaser irrespective of whether attention to the same has been specifically drawn or not.

- Invitation to Tender
- Technical Specification
- Commercial Part
- General Technical Specification

The following General Technical Specifications (GS) shall be read in conjunction with this Technical Specification.

GS 01	:	General instructions to Tenderer
GS 02	:	Fluid System
GS 03	:	Electrics, Drives & Controls and Communication
GS 04	:	Instrumentation & Controls
GS 05	:	Quality System, Inspection & Test of Plant/Equipment at Manufacturer's Premises

© 2022 MECON LIMITED. All rights reserved

GS 06	:	Steel Structures
GS 07	:	Civil Works
GS 08	:	Air Conditioning, Ventilation and Air Pollution Control system
GS 09	:	Painting
GS 10	:	Hydraulics & Lubrication
GS 11	:	Storage and Erection
GS 12	:	Fire Fighting System
GS 13	:	Material Handling Equipment
GS 14	:	Preferred Makes

02.11 The weight of individual equipment shall be indicated in the division list.

© 2022 MECON LIMITED. All rights reserved

3.0 General Description of The Plant

03.01 The melting and casting complex shall be designed for production of billets & rolling slabs of different aluminium hard alloys. It shall comprise Melting & Holding Furnaces, Vertical Direct Chill Casting Machine, Homogenizing Unit, Scalping & Band Sawing Machine, Ultrasound Inspection System for billets & slab. The location of the complex along shown in the General Layout Drawing no. MEC/UADNL/11/14/Q7R6/TS/01, Rev0.

03.02 Plant Capacity

The proposed plant shall produce about 90,000t/yr billets & rolling slabs of different aluminium hard alloys through 3 nos. of Melting furnace for melting of virgin aluminium, quality aluminium scrap and alloying, 2 nos. of liquid metal holding Furnaces which supplies the liquid metal to casting machine, 2 nos. of Direct Chill Casting Machine for production of billets & rolling slab, 4 nos. of Homogenizing Unit, set of Scalping & Band Sawing Machine suitable for slabs and billets, 1 nos. of Ultrasound Inspection System for billet & slab complex.

03.03 Process Flow

The virgin aluminium ingots, quality aluminium scrap and master alloys are charged into the melting furnace with the help of charging vehicle. Once the solid metal gets melted and reached the desired temperature necessary fluxing and de-drossing shall be done. Further liquid metal is transferred into the holding furnace through launders by gravity flow from melting furnace. Sufficient holding time shall be given to liquid metal for better homogeneity in terms of metal composition & temperature. After getting the final composition and casting temperature of the aluminium alloy to be cast, the liquid metal is transferred through launders by gravity flow into the DC casting machine.

© 2022 MECON LIMITED. All rights reserved

Molten metal from holding furnace will be first grain refined by using Titanium boron rod. After grain refinement, molten metal will be transferred to degassing unit through heated launder. It is very essential to minimise the hydrogen content of the molten metal to avoid hydrogen embrittlement. Suggested range to achieve quality is 0.11 cc of hydrogen per 100 gm of molten metal (LECO/ALSCAN or equivalent). For aerospace applications Argon will be used for degassing purpose. Off gas from degasser will be also taken out by duct and this duct will be linked with melting /holding furnace gas main duct. After degassing, molten metal will be filtrated by ceramic foam filter and deep bed filter to minimize inclusion limit in molten metal. PoDFA (or equivalent) value will be around <0.10 mm2/Kg. On quality checking after filtration, molten metal will be transferred to DC casting machine.

The casting line is of the DC type, with stationary moulds cooled with water, being capable of casting several ingots per drop. The treated molten aluminium alloy will be transferred to casting machine stand by distribution trough attached with the mold table. The VDC casting machine should be equipped with online ultrasonic inspection system to check the defects and dimensions continuously throughout the cast. Each drop of a single DC casting will produce up to 50t of billet & rolling slabs (of varying number, depending on width and length). Slabs & billets of each drop will be taken out by a special attachment mounted EOT crane from the casting pit and will be stored in casting bay.

Before being rolled on the Hot Mill, the ingot needs to be heated up to a specified temperature. For some products a homogenising practice needs to be used whereby the billets & slab goes through a pre-defined thermal cycle to ensure the correct mechanical properties are achieved in the final product.

In a pusher furnace a number of slabs and billets can be placed inside and heated through the thermal cycle progressing stepwise from the entry to the exit of the furnace. There are multiple

© 2022 MECON LIMITED. All rights reserved

heating zones designed in this type of furnace each enabling the development of different temperature profiles.

Tenderer should design the system of transferring the cast billets & slabs of different grade of alloys to the homogenizing furnace in such a way that the tendency of cracking of billets & slabs are avoided. After homogenizing, the slabs are to be transferred to slab storage area by means of fork lift or suitable arrangement for subsequent sawing and scalping operation for sizing and removal of surface oxide layer.

The scalper removes the top, bottom and (for some products) the edge layers from the cast slab. The working tool consists of milling heads with a series of blades. These milling heads are positioned above the face and sides of the slab as it is processed. For billet a separate suitable machine is to be considered.

High Speed Band Sawing Machine with a travelling head, engineered to efficiently and quickly cut large Aluminium slabs & billets.

After scalping, ultrasonic testing is carried out to check the soundness of the cast products.

03.04 General Layout

A tentative General layout drawing No. MEC/UADNL/11/14/Q7R6/TS/01, Rev. 0 of the proposed High End Aluminium Alloy FRP Plant showing the location of different units like Slab & Billet Casting Shop, Hot and Cold Rolling Mill Shop, MRSS, Raw water Reservoir etc. is enclosed with this specification.

Tenderer has to plan their entire facilities for Aluminium Alloy Melting, Casting, Homogenising, Scalping and Sizing to produce Slabs and Billets in the area marked as 1. The proposed High End Aluminium Alloy FRP Plant site & meteorological information of plant i.e. location, climate condition, connectivity of the site with

© 2022 MECON LIMITED. All rights reserved

railways, road, ports, etc. are furnished in chapter 04 site condition and design data of TS.

Location of the melting and casting complex layout proposed by Tenderer in its offer w.r.t. overall plant general layout shall be finalized during discussion. Further, location of cable tunnels, cable galleries, water supply tunnels and utility etc. lines shall also be finalized.

The disposition of main technological units shall be kept strictly in consonance with process and logistics vis-à-vis other units. Location of services units and auxiliary facilities, viz. electrical sub-station, water supply facilities, fire water pump house, administrative building, repair shop etc. shall be suitably located to meet the technological requirements.

© 2022 MECON LIMITED. All rights reserved

4.0 Site Condition and Design Data

04.01 Location

The site has been identified by UADNL in the Bodduvaripalem village in the Kodavaluru Mandal of SPSR Nellore District at Andhra Pradesh. Nearest city/ town from the site is Nellore and the distance is 20km. The location code or village code of Bodduvaripalem village is 591902. The Bodduvaripalem village is located in Nellore district in Andhra Pradesh, India. The other nearest district head quarters is Ongole in Prakasham district and is situated at 110 KM distance from Bodduvaripalem. The geographical coordinates i.e. latitude and longitude of Bodduvaripalem is 14.436255 and 79.969225 respectively.

04.02 Climatological Data

Sr. No.	Site Particulars	Details
1.	Site location	Site is located at Bodduvaripellam village in Kodavalure Tehsil of Nellore Distt.
2.	Site co-ordinates (two longitudinal ends)	The reference area lies between the location co-ordinates (LAT 14^{0}35'0" N, LONG 79^{0}57'30"E) and (LAT 14^{0}37'30" N, LONG 80^{0}00'00"E)
3.	Climatic conditions (Nellore Site)	
a)	Temperature Mean maximum Mean minimum	39.9^{0}C (May) 20.7^{o}C (January)
b)	Mean Annual Rainfall	1042.1 mm
c)	Relative Humidity	69%
d)	Predominant wind directions	Pre-monsoon: W and E Annual: W and E
4	Climatic conditions (Nellore Site)	
a)	Temperature	Max: 45°C and Min:17.8^{o}C
b)	Relative humidity	Max:87% and Min: 49%

© 2022 MECON LIMITED. All rights reserved

Sr. No.	Site Particulars	Details
c)	Predominant wind directions	WNW, W and E
5	Plant site Elevation above MSL	99 to 107 m above MSL
6	Plant site Topography	Slope increasing towards North
7	Nearest major water bodies	Penna river (20 km)
8	Archaeologically important places	None in 15-km radius
9	Reserved / Protected Forests	No Forest blocks in 5 km away from site
10	Seismicity	Seismic Zone-II as per IS 1893 (Part I): 2002
11	Defence Installations	None in 15-km radius area
12	Major industries in 15-km radius	None in 10-km radius area

04.03 Railways

Padugupadu railway station is the nearest railway station from Bodduvaripalem. The straight line distance from Bodduvaripalem to Padugupadu railway station is around 10 Km. The nearest railway station and its distance from Bodduvaripalem are follows :

- Padugupadu railway station (10 KM.)
- Settigunta railway station (14.0 KM.)
- SPSR Nellore railway station (14 KM.)
- SPSR Nellore South railway station (16.0 KM.)
- Bitragunta railway station (20 KM.)

04.04 Airport

The nearest airport from Bodduvaripalem‘s is Tirupati Airport & Chennai airport.

© 2022 MECON LIMITED. All rights reserved

04.05 Sea Port

The site can be served from Krishnapatnam, Chennai, Kakinada and Vizag Ports. Nearest port is Krishnapatnam which is about 40 km from site by road. Chennai, Kakinada and Vizag ports are respectively 150 km, 530km and 660km away from site by road.

04.06 Roads

The plant is adjacent to NH-5 (Nellore – Vijaywada Highway).

04.07 Communication

Modern facilities for domestic and international communication like, telecom, fax, phone, internet, etc exist at Nellore City.

© 2022 MECON LIMITED. All rights reserved

5.0 Special Instructions to the Tenderers

05.01 Consortium

The Tenderer may furnish their offer on consortium basis. In such case, all members of the consortium shall be responsible and liable jointly and severally for the execution of the scope of work under the technical specification and together responsible for the integration, interfacing, co-ordination and completeness of the total scope of work including performance guarantee parameters specified in the technical specification. Eligibility criteria for the consortium and consortium leader shall be as per other relevant documents enclosed with tender specification.

05.02 Tendering

05.02.01 It shall be deemed that the Tenderer has clearly understood the content and meaning of the work and studied this document and related references. The Tenderer should visit the proposed site of installation of the plant and study the area and installations adjoining the proposed site so as to satisfy himself about intent, nature and implications of work involved. Any representation after submission of tender for any revision / modification on this account shall not be accepted.

05.02.02 The Tenderer may contact the Project Department of UADNL for any clarifications / site visits, etc. required before submitting the offer with prior appointment.

05.02.03 The Tenderer shall submit the following details / information along with the offer without which offer is likely to be rejected.

i) Division list of scope of work for design, engineering, supply, erection and supervision along with detailed list of equipment with number and item wise tentative weight of equipment.
ii) Technological layout and reference cross-sectional drawings of all processing units being featured in this package.
iii) Process description and material flow diagram.
iv) Complete list of plant, equipment and process parameters.

© 2022 MECON LIMITED. All rights reserved

v) Technical Specifications and description of all technological and other equipment facilities offered for along with reference General Arrangement drawings, Catalogues, technical data, etc.

vi) Details of electrics, instrumentation and automation along with power supply schemes.

vii) Total connected load in kw, peak load of the system on 30 minutes basis. Requirement of emergency supply should be clearly indicated in the offer.

viii) Specific power consumption.

ix) Requirement of various utilities along with quality, flow rates and pressure at take over point.

x) List of major bought out imported and indigenous items along with proprietary items / drawings, if any.

xi) Completion schedule in the form of bar chart from effective date of contract as zero date till successful commissioning.

xii) Erection Philosophy/ Methodology.

xiii) List of commissioning spare.

xiv) List of recommended spares for two years normal operation and maintenance, insurance spares and special tools and tackles required for maintenance of the units with consumption / frequency of repair.

xv) Brief on organizational set up, nature of business, annual turnover, manufacturing and testing facilities available and quality control methods / procedures available with the tenderer.

xvi) Schedule of site mobilization with details.

xvii) Preliminary Quality Assurance Plan (QAP).

xviii) List of similar jobs executed indicating details like contract value, name of company, start up date, capacity of the plant, etc. with satisfactory performance certificate issued by the owner.

xix) List of special tools and tackles.

xx) Lists of handling and hoisting facilities.

xxi) Training schedule
The Tenderer shall submit discipline wise training plan and a training programme in identical plant in India / abroad.

xxii) Filled up questionnaire enclosed with this TS.

xxiii) Preferred makes list of Purchaser shall be followed.

© 2022 MECON LIMITED. All rights reserved

xxiv) 3D model for all process / Casting units shall be developed and furnished in completeness.

xxv) Assistance for getting Certification from the competent agency.

xxvi) Any other details asked for in technical specification elsewhere.

05.02.04 The Tenderer shall adhere to the following instructions.

i) Commissioning of melting & casting equipments in 24 months.

ii) Melting & casting shop shall be able to produce all grade of aluminum hard alloys slab & billets proposed in the product mix.

iii) Performance Guarantee Requirement as specified.

iv) Melting & casting shop shall incorporate all the latest technologies/system developed and proven so for.

v) Design feature/system selected will ensure latest automation and computer system with requiring minimum manpower and maximum availability of equipment.

vi) All latest pollution control measures must be provided as per technological specification to meet stringent pollution parameter.

vii) Manufacturing drawings of all spares and fast wearing components to be supplied.

viii) All drawings in soft copy in Auto CAD format.

ix) Civil and Structural assignment drawings in soft copy in Auto CAD format.

05.02.05 Tenderer may offer certain alternate system equipment of improved design with clear justification for the same.

© 2022 MECON LIMITED. All rights reserved

6.0 Safety

Safety shall be an in-built feature at all the stages of project implementation right from design stage till the successful commissioning of all the plant and facilities covered in this specification.

All equipment shall be equipped with adequate safety devices wherever a potential hazard to operating/maintenance personnel exists. Safe accesses shall be provided to and around the equipment to ensure smooth and safe operation and maintenance. Clearance of statutory authorities to satisfy safe installation and operation shall be obtained by the Contractor and facilities required to meet the relevant safety norms, standards and regulations shall be provided by the Contractor.

All erection and laying including tappings from hazardous gas networks shall be done in a safe manner so as not to cause accident/injury to plant or personnel including Contractor's workmen and employees.

The Contractor shall comply with all the latest "Safety Rules and Regulations" as per Indian norms for design, installation and operation of plant and facilities.

The details given in the General Specification (GS-01) shall be referred.

© 2022 MECON LIMITED. All rights reserved

7.0 Scope of Work, Battery Limits and Exclusions

07.01 Scope of Work

Scope of work of the Tenderer shall include process technology/ know-how suitable for the product mix of the plant, design, engineering, transfer of process know-how, manufacture / fabrication, procurement of bought out items, assembly, inspection and testing, painting and packing, transportation, supply of all plant and equipment, materials, site storage, spares and consumables, refractories, electrics, utilities, hydraulics, auxiliary facilities, testing, erection technical services in India and abroad on a fully co-coordinated basis, training of Purchaser's personnel, commissioning of all equipment / units demonstration of performance guarantees and handing over the melting and casting plant facilities to the Purchaser within stipulated time schedule.

Besides, the following are also included in the scope of work of the Tenderer.

i) Basic and detailed engineering of the melting and casting facilities with a capacity of production of 90,000 TPY billets & rolling slabs of various aluminium hard alloys.

ii) Submission of the basic and detailed engineering drawings and documents to Purchaser for approval/information based on the details specified in the relevant chapter of this Technical Specification.

iii) Furnish basic data / drawings, etc. to enable the Purchaser/Consultant to engineer, procure and install the various following service facilities in suitable packages. The broad list of data /information required is indicated in the relevant chapter.
   a) Water treatment plant and supply system
   b) Gases and fuels like argon, nitrogen, LPG/Propane etc.
   c) Compressed air system
   d) Shop illumination and area lighting

© 2022 MECON LIMITED. All rights reserved

e) Laboratory
f) Power supply and distributions
g) Roads and transport equipment
h) Drainage and sewerage system
i) Communication system.
j) Water based fire fighting system and drinking water system.
k) Any other works connected with melting & casting shop.

iv) Tenderer shall provide basic engineering for Air Conditioning and Ventilation System (ACVS).
v) Furnish of load data/drawings/basic engineering information, etc. for designing the building structures and civil foundation for equipment rooms, premises, tunnels, trenches, various floors, etc.
vi) Supply of basic engineering information for designing of EOT cranes & hoists and slab transfer system in different bays.
vii) Erection, testing and commissioning of all equipment/system/facilities including services facilities in an integrated manner in Tenderer's scope of supply.
viii) Demonstration of Performance Guarantee Parameters of the plant and equipment including metallurgical guarantees.
ix) Training of Purchaser's personnel.
x) Supply of commissioning spares, insurance spares, initial fill of oil, lubricants, hydraulic oil, maintenance spares, refractories and all consumables.
xi) List of spares for two (2) years normal operation and maintenance with itemized price.
xii) Clarification/co-ordination (wherever required) for exchange of feed back data, interfacing, discussions, etc. to meet the requirement of various consortium members, if needed, for melting & casting facilities and auxiliary units, erection contractor, attending various co-ordination / progress review meetings, design conferences, etc.
xiii) All in-shop utility, services and water piplines, valves, fittings instruments, etc within limits and up to the consumer.

© 2022 MECON LIMITED. All rights reserved

xiv) Supply of equipment, transportation, loading/unloading and storage at site including port clearance, handling and inland transportation of imported equipment from port to site. Incase of FOB or C&F basis, the port clearance, handling and inland transportation of imported equipment from port to site will be done by Purchaser.

xv) Supervision during manufacturing, assembly and shop testing for equipment to be manufactured in India.

xvi) Provide necessary technical literature and documents in "English language", operation and maintenance manuals, safety manuals, list of spares, approved general arrangement drawings, assembly and sub-assembly drawings of the plant and equipment, manufacturer's test report, as-built drawings, manufacturing drawings for spares/wearing parts and components, catalogues, specification and drawings of consumables, refractories, etc.

xvii) Clearance of drawings and installations from statutory and other concerned authorities.

xviii) Supply of special tools and tackles.

xix) Furnish test certificate, quality assurance plan etc. as required by the purchaser's inspection agency.

xx) Supervision during Commissioning at site.

xxi) Supply and storage of equipment at site.

xxii) Arrangement and participation in inspection of equipment by purchaser and/ or his representative.

xxiii) Tender shall specify the repair and maintenance requirement of the equipment in detail.

All the facilities required for day-to-day maintenance of the plant & machinery will be supplied by the tenderer. This shall be clearly spelt out in the offer. Purchaser will provide only area / space in the plant as per requirement of the tenderer.

xxiv) Approval/concurrence of general arrangement drawings/schematic diagrams/design criteria, etc. adopted for engineering and execution of balance part of melting and casting complex like civil work, building and structural work, cranes,

© 2022 MECON LIMITED. All rights reserved

auxiliary equipment, etc. prepared by the Purchaser/Consultant on the basis of input basic engineering/basic drawings furnished by the Tenderer.

xxv) All equipment shall be fully assembled and tested before dispatch to site for major equipment, etc. The equipment shall be dispatched to site in fully assembled condition. Wherever necessary, the equipment may be disassembled in minimum number of sub assemblies before dispatch to site.

xxvi) The Tenderer shall take full responsibility for the suitability of specification and layout offered by the Tenderer in the contract for achieving rated output and required product, reliable working as well as ease of operation, inspection and maintenance including replacement with minimum downtime. If any change in equipment specification is required to be carried out afterwards for achieving the rated capacity of the plant as per specification of plant and equipment, the same shall be under Tenderer's scope.

xxvii) Tenderer shall indicate the list of spares & consumables with itemized price and its frequency of requirement with duration / life of each part. Tenderer shall also furnish the list of commissioning spares to be supplied, however, any additional spares required during commission shall be under scope of supplier free of cost and without any commercial implication to the purchaser

xxviii) The schedule of preventive maintenance shall be indicated in the offer.

xxix) The consumption of fuel; lubricants and other consumables shall be indicated separately. The recommended make / specification of lubricants shall be furnished. The tenderer shall also furnish the Indian equivalent make for the lubricants and consumables.

07.02 Scope of supplies

The Tenderer's scope of supply shall cover the following main units along-with auxiliary facilities.

Three (3) no. of Aluminium Ingot & Scrap Melting Furnace
Two (2) no. of Liquid Aluminium Holding Furnace
Two (2) no. of Vertical Direct Chill Casting Unit

© 2022 MECON LIMITED. All rights reserved

Four (4) no. of Homogenizing Unit
Set of Scalping & Band Sawing Machine suitable for slabs and billets.
One (1) unit of Ultrasound Inspection System for slabs and billets.

The supply of above units shall be complete in all respect comprising the following for proper functioning and completeness in line with the offered process technology / know-how. Equipment / supplies not covered in the scope of supply of the Tenderer but required for integrated functioning of complete Melting & Casting complex shall also be included.

- Complete equipment proper and accessories related to above mentioned equipment
- In-shop water supply and distribution system
- Supporting structures for ducts, pipelines and equipment
- Fume extraction system, pollution control,
- Thermal insulation of equipment for human protection, noise insulation for ducts and acoustic enclosures, wherever required
- Facilities for industrial gases and fuel gases like argon, nitrogen, compressed air, propane, etc. within battery limit
- Technological structures for control posts, platforms, stairs, hand railing, etc.
- Electrics, controls, automation including Level-I automation, instrumentation, communication and process control models (Level - II)
- Basic data / information of Telecommunication facilities
- Complete hydraulics and lubrication systems
- Refractories (initial as indicated in this TS)

© 2022 MECON LIMITED. All rights reserved

- Operational and maintenance tools and tackles
- Computer facilities related to operation, maintenance, storage of process data, software and functional control of offered melting & casting package
- Application software for process control in melting & casting facilities with installation and commissioning.
- Computer hardware, network and system software and process control application software.
- Basic data for operating consumables
- Spares for two years operation and maintenance. Commissioning spares, required up to successful commissioning
- Special tools and tackles, instruments, appliances, etc. for erection, testing, commissioning, operation and maintenance
- List of 2 years operation and maintenance spares and insurance spares.

Tentative scopes of supplies of major technological facilities are indicated in the following paragraphs.

07.03 Battery Limits

Supply of various services / utilities such as fuel gas, water, compressed air and nitrogen shall be made available by the Purchaser at the Melt Shop & Casting Shop building columns (header will run through building for each utility at a height to be mutually agreed at detailed engineering stage). The Tenderer shall provide required pipes, valves and fittings to tap / draw required services from the following TOP for melting and casting plant facilities:

i) The compressed air from the nearest header running through the building columns along one axis of each bay(TOP). The pressure available is 5.0 kg/cm2.

© 2022 MECON LIMITED. All rights reserved

ii) Fuel Gas shall be made available at the nearest header running through the building columns along one axis of the bay TOP. The pressure available shall be 0.5 - 1.5 kg/cm2.

iii) Nitrogen and Argon from the nearest header running through the building columns along one axis of the bay (TOP). The pressure available shall be 5.0-7.0 kg/cm2.

iv) The raw material here is virgin Aluminium metal in the form of standard ingot (~20 kg) at a purity level > 99.70% along with master alloys like Copper, Magnesium, Zinc, Silicon, Lithium etc and Aluminium scraps. All above raw materials are picked up from storage area as per production requirement and shifted to Melting furnace Bay for charging into Melting Furnaces.

v) Industrial quality make-up water, recirculation (supply & return) water (contact water & non-contact water) , emergency cooling water, fire fighting water will be made available at the nearest header running through the building columns along one axis of the bay. Soft water / DM make-up water, water for drinking and all other waters shall be covered in a separate chapter no. 10.06 (water supply system) of TS.

vi) Electrics, Automation and telecommunication shall be covered in separate chapter no. 10.07 (Electrics, Automation and Telecommunication) of TS.

07.04 Exclusions

The following items shall be excluded from the Tenderer's scope of supply.

- Supply of input raw material.

© 2022 MECON LIMITED. All rights reserved

- Generation of Propane, argon, nitrogen, compressed air and electric power along with their supply up to take over points.

- Laying of make-up water, drinking water, storm water, water pipelines beyond the battery limit.

- Shop Building structure

- All civil work for equipment and building foundation, various rooms, cable tunnels, trenches etc.

- Shop illumination/Plant area lighting and lightening protection beyond battery limit.

- Material handling equipments like shop cranes, forklifts, FTV etc.

- Laboratory equipment

07.05 Deviations

In general, deviation to this technical specification is not acceptable. However, any specific deviation by Tenderer shall be clearly spelt out in the offer with justification.

07.06 Scope Matrix

TD - Technogy Details, BD - Basic Data, DE – Detailed Engineering, S - Supply, EC - Erection & Commissioning
T – Tenderer, P – Purchaser * - If Required

Sl. No.	Description of Work	TD	BD	DE	S	EC
1.	Raw Materials - Aluminium Ingot	**T**			**P**	
2.	Required Alloy Elements	**T**	**T**	**-**	**P**	**-**

© 2022 MECON LIMITED. All rights reserved

Sl. No.	Description of Work	TD	BD	DE	S	EC
3.	Technology for Aluminium Alloying	**T**	**T**	**T**	**-**	**-**
4.	Ingot and Alloy Charging Unit	**T**	**T**	**T***	**T/P***	**T/P***
5.	Melting Furnace With all Accessories & Stack	**T**	**T**	**T**	**T**	**T**
6.	Transfer of Molten metal to Holding Furnace	**T**	**T**	**T**	**T**	**T**
7.	Holding Furnace With all Accessories & Stack	**T**	**T**	**T**	**T**	**T**
8.	Alloying Technology Details for both types of Furnaces with special requirement, if any	**T**	**T**	**T**	**T**	**T**
9.	Transfer of Molten metal for Casting with Filtration/Treatment/Grain Refinement/ Degassing (as per requirement)	**T**	**T**	**T**	**T**	**T**
10.	Furnace Skimming Unit/Furnace Tending Vehicle	**T**	**T**	**T/P***	**T/P***	**T/P***
11.	Degassing System	**T**	**T**	**T**	**T**	**T**
12.	Dross Collection System for all the Furnaces	**T**	**T**	**T**	**T**	**T**
13.	Caster for billets & slabs for Rolling	**T**	**T**	**T**	**T**	**T**
14.	Handling equipment/tackle of Cast Billets & Slabs for Homogenising	**T**	**T**	**T***	**T/P***	**T/P***
15.	Homogenising of billets & Slabs	**T**	**T**	**T**	**T**	**T**
16.	Product certification of cast billets & slabs for all grades for it intended application for mutually agreed products.	**T**	**T**	**T**	**T**	**T**
17.	Handling System of Cast Billets & Slabs for scalping & Sizing	**T**	**T**	**T/P***	**T/P***	**T/P***
18.	Scalping System of Cast Billets & Slabs	**T**	**T**	**T**	**T**	**T**
19.	Sawing/Sizing of the Billets & Slabs	**T**	**T**	**T**	**T**	**T**
20.	Any other technological equipment required for the process as per technology provider	**T**	**T**	**T**	**T**	**T**
21.	Storage & handling of Process scraps System	**T**	**T**	**P**	**P**	**P**
22.	Ultrasound Dimensions Detecting System	**T**	**T**	**T**	**T**	**T**
23.	Intermediate Storage Requirement & Procedure for Slabs to be rolled	**T**	**T**	**T/P***	**T/P***	**T/P***

© 2022 MECON LIMITED. All rights reserved

Sl. No.	Description of Work	TD	BD	DE	S	EC
24.	Requirement of Water	**T**	**T**	-	-	-
25.	Provision of Water at Take over point (TOP) near the Casting Shop building columns (header will run through building).	**P**	**P**	**P**	**P**	**P**
26.	Water from the TOP for further distribution in Casting Shop to the equipments	**T**	**T**	**T**	**T**	**T**
27.	Requirement of Compressed Air	**T**	**T**	-	-	-
28.	Provision of Compressed Air at Take over point (TOP) for the Casting Shop building columns (header will run through building).	**P**	**P**	**P**	**P**	**P**
29.	Compressed Air from the TOP for further distribution in Casting Shop to the equipments	**T**	**T**	**T**	**T**	**T**
30.	Requirement of Fuel	**T**	**T**	-	-	-
31.	Provision of Fuel up to a close point near the Casting Shop building columns (header will run through building).	**P**	**P**	**P**	**P**	**P**
32.	Fuel from the specified point near the Casting Shop to the equipments	**T**	**T**	**T**	**T**	**T**
33.	Requirement of Inert Gases	**T**	**T**	-	-	-
34.	Provision of Inert Gases up to a close point near the Casting Shop building columns (header will run through building).	**P**	**P**	**P**	**P**	**P**
35.	Inert gases from the specified point near the Casting Shop to the equipments	**T**	**T**	**T**	**T**	**T**
36.	**Civil Works**	**-**	**T**	**P**	**P**	**P**
37.	All equipment anchor bolts	**T**	**T**	**T**	**T**	**T**
38.	All embedded steel for equipment and technological structure.	**T**	**T**	**T**	**T**	**P**
39.	Equipment grouting.	**-**	**-**	**-**	**T**	**T**
40.	Civil Building works	**T**	**T**	**P**	**P**	**P**
41.	Site survey and soil data (Bearing capacity)	**P**	**P**	**P**	**P**	**P**
42.	Building Structural Works	**T**	**T**	**P**	**P**	**P**

© 2022 MECON LIMITED. All rights reserved

Sl. No.	Description of Work	TD	BD	DE	S	EC
43.	Electrical and Automation	**Refer Chapter 10.07 Cl no. 10.07.17 Scope Matrix**				
44.	Fire Fighting System	**T**	**T**	**P**	**P**	**P**
45.	Cranes/Hoists/Transfer cars	**T**	**T**	**P**	**P**	**P**
46.	Requirement of Emergency Water	**T**	**T**	**P**	**P**	**P**
47.	Onboard equipment platforms, staircases, ladders, safety handrails, etc.	**T**	**T**	**T**	**T**	**T**
48.	Special tools and tackles.	**T**	**T**	**T**	**T**	**T**
49.	2 years operation & maintenance spares	**T**	**T**	**T**	**T**	**T**
50.	Commissioning Spares	**T**	**T**	**T**	**T**	**T**
51.	First fill of all technological equipment consumables till plant takeover by purchaser	**T**	**T**	**T**	**T**	**T**

1. **Performance Guarantee for the Cast billets & Slabs is to be Established by the Tenderer.**
2. **Store & Store management is to be done by Tenderer**

© 2022 MECON LIMITED. All rights reserved

8.0 Regulation and Standards

08.01 The equipment / component shall be designed and assembled and tested as per latest relevant Indian standard published by the Indian Standards institutions wherever available, so that the specific aspects under Indian conditions are taken care. Wherever suitable Indian Standards are not available, other international standards such as BS, ASTM, DIN, etc. may be adopted.

08.01.01 Wherever Indian standards do not exist, the components of all equipment shall be designed, assembled and tested in accordance with the latest standards of the International Standards Institution like Institution of Electrical and Manufacturer's Association, USA (IEEE), National Electrical and Manufacturer's Association, USA (NEMA), International Electromechanical Commission (IEC) etc.

08.01.02 The equipment shall also conform to the latest Indian Electricity Rules and State Electricity Rules, as regards safety, earthing and other essential provisions specified therein for installation and operation of electrical plants.

08.01.03 All items of the equipment shall comply with the latest regulations and stipulations of Inspectorate of Factories and other applicable statutory bodies of Government of India. The successful bidder will have to obtain necessary approvals from statutory authority / authorities and other concerned agencies. All costs on this account shall be borne by the successful bidder.

08.01.04 The successful Tenderer shall obtain the necessary clearance for installation of plant and equipment from statutory bodies/concerned govt. authorities, wherever applicable.

08.01.05 The latest revisions of the relevant Indian/International Standards shall be used by the successful Tenderer for materials, design, fabrication, manufacture, inspection, installation and testing of the plant and equipment.

© 2022 MECON LIMITED. All rights reserved

08.01.06 All weights and dimensions shall be in metric system. English language shall be used in drawings, documents, manuals, reports, official correspondence, etc.

08.01.07 The list of the standards proposed to be followed by the Tenderer shall be indicated in the offer.

08.01.08 The regulations and standards to be followed by the Bidder are also specified in the "General Technical Specifications".

08.02 Standardisation

In order to minimize the inventory of spare parts and changeable equipment for operation of Melting and Casting plant, the Tenderer shall ensure that the plant and equipment offered have maximum interchangeability and similarity of equipment and components such as electric drives, instruments, hydraulic equipment, pumps, piping, valves and fittings, etc.

The Tenderer shall select the make/manufacturer of items/equipment, such as electrical equipment, gear boxes, couplings, bearings, hydraulic equipment, instruments and controls, computer hardware or other similar items from the list of Preferred Makes of the Purchaser issued along with this Tender.

© 2022 MECON LIMITED. All rights reserved

9.0 Production Programme

The production programme of the proposed melting and casting shop is given in table - 09.01

Table -09.01

Production Programme of Melting and Casting Shop

Sl. No.	Description	Quantity, t/yr
1.	Annual production of aluminium hard alloy billets & slabs	90,000

The tentative production programme for production of 90,000 t of aluminium hard alloy (Billets 30,000T & slab 60,000T initially) is given in table -09.02 grade wise in detailed.

Table – 09.02

Typical Annual Production Programme

Target Alloy grades	Annual Production (t/yr)		Intermediate /Final application in the form of
2014, 2024, 2124, 2219 & 2618	12000	3500	Billets & Plates (Defence & Aerospace)
5052, 5083, 5086 & 5754		2500	
6061 & 6082		2500	
7010, 7050, 7175 & 7449		3500	
2014, 2024, 2219 & 2618	7500	2100	Billets & Sheets (Defence & Aerospace)
5000, 5005, 5052, 5083 & 5754		1500	
6061 & 6082		1500	
7010, 7050 & 7075		2400	
5052,5082,5083	70500	35000	Billets & Coil (ABS) - (Automotive, Railway, Marine, Machinery & Equipment)
6016,6022,6061		35500	
TOTAL ANNUAL OUTPUT	**90,000 T**		

© 2022 MECON LIMITED. All rights reserved

Bidder shall furnish capacity calculation chart indicating the annual operating hours required and annual operating hours available of the above production programme. The bidder shall also indicate the indicative break-up of various breakdowns, routine and capital maintenance schedules etc.

9.01 Product Specification

Slabs are the final product of the Melting and Casting facility of deferent size depending up on the type of alloy to be cast and requirements of the customer. However the indicative ranges of the size are given in table- 09.02. Billets will also be produced as intermediate product.

Table -09.02

Parameter	Description
Production Capacity	90,000 t/y
Production Rate	To be furnished by tenderer
Alloy Grade	2XXX, 5XXX, 6XXX and 7XXX Series Alloy Grade
Alloying element	Copper - 0-6.6% Magnesium- 0-4.9% Manganese- 0-0.6% Silicon- 0-1.3% Zinc- 0-6.5% Lithium- 0-1.3%
Range of Slab Length	2500~5500 mm
Range of Slab Thickness	400 -650 mm
Range of Slab Width	1000~2400 mm
Maximum Slab Weight	23 tons
Billet Size	8”/9” (adjustable),18” & 26” diameter X 6500 mm length

The tolerance for thickness, width, flatness, straightness, etc will be as per BS 5l 100:2011 “Procedure for inspection, testing and acceptance of wrought aluminium alloys” or equivalent standard.

© 2022 MECON LIMITED. All rights reserved

10.0 Technological Parameters and Facilities

10.01 General

The tenderer shall supply, erect, commission, and demonstrate performance guarantee test for alloy melting and casting facilities complete with melting furnace, holding furnace, launder, metal degassing system, Ti-Bor Rod feeder, Metal filtration system, vertical direct chill casting machine for the casting of Aluminium Alloy billets & slabs, Homogenising unit, Ultrasound Inspection System, Band Sawing and Scalping Machine, including auxiliaries and accessories. The equipment/system shall be designed to suit the site condition mentioned in the T.S., however, the maximum ambient temperature may be considered as 50^0C.

The services like water, compressed air, propane gas, electric power, nitrogen, etc. shall be provided by the purchaser at a specified point. Battery limit of the shop as defined at chapter no. 07 in this specification.

The raw materials for the production of aluminium alloy slab are virgin aluminium ingot, alloying elements in the form of master alloys/hardeners and scrap to be generated in the various process steps. All above raw materials are picked up from the storage area as per production requirement and shifted to furnace Bay for charging into Melting Furnaces. The output of the facilities shall be ultrasonically sound billets & slabs which are then preheated in a pit-type preheating furnace and slabs then sent to mills.

10.01.1 System Description

The major technological facilities shall include the following:

10.01.1.A Melting and Alloying Unit

© 2022 MECON LIMITED. All rights reserved

Metal and Master alloys shall be received in melting furnaces by rail-mounted charging machines/ fork-lift trucks. 3 tilting type, melting furnaces shall be required of 55t capacity each. The combustion system shall be adequate to maintain a continuous melt rate of approximately 6.5t/hr. Necessary fluxing using a rotary flux injector shall be carried out in the melting furnace. A Skimmer shall be used to collect the dross formed and the dross shall be collected in the dross pans. A forklift shall be used to periodically remove dross pans. Electro-magnetic stirrer (EMS) shall be used for stirring the molten metal. Minimum three Propane/ Natural gas-fired burners shall be used in each melting furnace. Centrifugal combustion air blower shall be present. The temperature in the furnace during melting shall be normally kept around 750° C. After quality checking, the liquid metal shall be transferred into the holding furnace by tilting the furnace. The liquid metal shall be transferred into the holding furnace through launder by gravity flow. The melting furnace shall have a liquid bath volume calculated to contain 55 t of liquid aluminum when filled.

Combustion air shall be supplied from a direct driven blower complete with filter and silencer which shall be mounted on the furnace roof. The furnace pressure shall be maintained slightly positive to prevent cold air ingress. The combustion product in the form of flue gases shall be discharged into the atmosphere through a self-supported refractory-lined steel chimney. The chimney shall be designed as per IS: 6533 part I & II to fulfill CPCB norms. The flue duct from all the three melting furnaces shall be connected to a common chimney.

TECHNICAL PARAMETERS & DESIGN DATA FOR MELTING FURNACE

1	Purpose	:	Melting of aluminium and its alloys including in-house scrap for Casting.
2	Type	:	Fuel Gas fired tilting type refractory lined rectangular bath aluminium melting furnaces for aluminium and its alloys.

© 2022 MECON LIMITED. All rights reserved

3	Furnace bath capacity	:	55t max.
4	Melt rate	:	6.5t/h (39tonnes ingots charge/scrap melted over 6 hours (ingot weight = 20 kgs). Charging will be done in steps during first three hours and charge door shall be opened for a total time of 50 minutes during complete charging. During next 3hours, doors shall remain closed. At the end of 6 hrs, 39tonnes of liquid metal will be available at 750± 5^0C
5	No. of furnace	:	3 (three)
6	Charge composition	:	100% solids of ingots / baled scraps.
7	**Furnace major dimensions will be a follows :**		
	Bath size		To be indicated by the Tenderer
	Metal depth		To be indicated by the Tenderer at centre of bath
	Space above metal bath		To be indicated by the Tenderer
	Overall furnace height		To be indicated by the Tenderer
	Molten metal level below Pouring spout sill level		150 mm
8	Discharge spout height	:	To suit a height such that molten metal bottom level on the common discharge launder at 3m distance from centre line.
9	Furnace temp. (Roof)	:	1050^0C max.
10	Molten bath temp.	:	800^0C max. 750^0C normal
11	Bath temp. uniformity	:	± 5^0C at 750^0C
12	Fuel	:	Propane/Natural Gas having a gross c.v. of approximately 22,000 kcal/Nm3/9000 kcal/Nm3.
13	Skin temp. (under normal working conditions) i.e.	:	i) Side walls above sill level : 85^0C ii) Side wall below sill level & hearth : 110^0C

© 2022 MECON LIMITED. All rights reserved

	holding at 750 ±5 ^{0}C		iii) Roof & Door : 100^{0}C
14	Mode of charging	:	Solid metal manually or by fork lift trucks / mobile charger
15	Mode of discharging	:	By tilting on discharge launders
16	Tilting mechanisms	:	Hydraulically operated along with over tilting limit switch.
17	Heat input	:	To be furnished by the Tenderer
	Melting Burners	:	Adequate no. of burners of suitable capacity for specified melt rate Tenderer to furnish the details
18	Combustion air fan	:	1 No. for each furnace
	Capacity	:	To be furnished by the Tenderer
	Pressure	:	To be furnished by the Tenderer
	HP rating of drive motor	:	Suitable energy efficient motor Tenderer to furnish the details
	Location of fan	:	As per layout and mutually agreed
19	Doors (vertical opening)	:	
	Solid metal charging door (electrically operated rise & fall type) non water cooled.	:	1 No.
	Material of construction	:	HRCS Casting & M.S
20	Pouring spout	:	Heat resisting cast steel in 2 pieces pivoted together via sprung clamped joint.
21	Pivot supports with bush	:	2 nos. trunnions on tilt axis side with M.S brackets.
22	Exhaust duct	:	1 No., common M.S exhaust duct with refractory lining for Melting furnaces.
23	Discharge launder	:	Provided upto 0.5m beyond T – joint
24	Damper	:	1 No. pneumatically operated flap type damper for each furnace.
25	Self-supported chimney	:	1 No., common self-supporting chimney of M.S of adequate height from floor level, refractory lined upto its full height so as to conform to the

© 2022 MECON LIMITED. All rights reserved

			latest pollution control standards and regulations.
	Code of construction	:	IS – 6533 (part I&II) with latest codes on pollution control norms
	Material	:	M.S plate of tested quality (Tenderer to Specify)
26	Piping, valves & fitting	:	1 set each for combustion air, fuel gas (Propane/NG) main system, **compressed air system**, hydraulic oil system and water system.
27	Platform, ladder, walkway and hand railing etc.	:	1 set on each furnace as required on the roof and a platform for burner operation on side wall meeting the standard norms.
28	Electro-magnetic stirrer (EMS).	:	1 set on each furnace
HYDRAULIC TILTING SYSTEM:			
1	Hydraulic power pack	:	Common hydraulic power pack for all the 3 nos. of furnaces.
2	No. of tilting cylinders per furnace (along with over tilting limit switch)	:	2
3	Type of cylinders	:	Double acting
4	Total no. of pumps for all the 3nos. of furnaces	:	4 (3 working and 1 standby)
5	Oil tank	:	To be indicated by the tenderer
6	Heat exchangers	:	To be indicated by the tenderer
7	Piping & valves	:	1 set
8	First fill of hydraulic oil and loss during commissioning	:	To be included as required
9	Maximum tilting angle	:	To be indicated by the tenderer
10	Normal tilting angle	:	To be indicated by the tenderer
11	Safe automatic descending of furnace in the event of power failure	:	To be Provided.
12	Metal flow rate	:	Tenderer to indicate, (based on 10t/h

© 2022 MECON LIMITED. All rights reserved

			maximum casting speed)
13	Maximum tilting rate for up and down movement	:	Tenderer to indicate

10.01.1.B Holding Furnaces

Two tilting types, holding furnaces each of 50t capacity shall be provided. There shall be minimum two nos. wall-mounted burners. The firing of burners shall run across the length of the combustion chamber to maintain the temperature uniformity of the liquid aluminum. Electro-magnetic stirrer (EMS) shall be used for stirring the molten metal. Combustion air shall be supplied from a direct driven blower complete with filter and silencer. The furnace pressure shall be maintained slightly positive to prevent cold air ingress. The combustion product shall be discharged into the atmosphere through a self-supported refractory-lined steel chimney. Flue duct from both the holding furnaces shall be connected to a common Chimney which shall be designed as per IS: 6533, part I & II for compliance with CPCB norms. As and when required by the casting machine, the holding furnace shall be tilted and liquid aluminum shall be supplied to the caster through launder by controlled tilting of the holding furnace. The flue duct from both the two holding furnaces shall be connected to a common chimney.

TECHNICAL PARAMETERS & DESIGN DATA FOR HOLDING FURNACE

1	Purpose	:	Holding and refining of aluminium and its alloys for Casting.
2	Type	:	Propane / NG fired tilting type refractory lined rectangular bath aluminium holding furnaces for aluminium and its alloys.
3	Furnace bath capacity	:	50t max.

© 2022 MECON LIMITED. All rights reserved

4	No. of furnace	:	2 (two)
5	Charge composition	:	100% molten metal at 740^{0}C max. + alloy elements.
6	**Furnace major dimensions will be a follows :**		
	Bath size		To be indicated by the Tenderer
	Metal depth		To be indicated by the Tenderer at centre of bath
	Space above metal bath		To be indicated by the Tenderer
	Overall furnace height		To be indicated by the Tenderer
	Molten metal level below Pouring spout sill level		150 mm
7	Discharge spout height	:	To suit a height such that molten metal bottom level on the common discharge launder at 3m distance from centre line.
8	Furnace temp. (Roof)	:	1050^{0}C max.
9	Molten bath temp.	:	730^{0}C normal
10	Bath temp. uniformity	:	± 5^{0}C at 730^{0}C
11	Fuel	:	Propane/Natural Gas having a gross c.v. of approximately 22,000 kcal/Nm3/9000 kcal/Nm3.
12	Skin temp. (under normal working conditions) i.e. holding at 730 ±5 ^{0}C	:	i) Side walls above sill level : 85^{0}C ii) Side wall below sill level & hearth : 110^{0}C iii) Roof & Door : 100^{0}C
13	Mode of charging	:	Molten metal from melting furnace through launders.
14	Mode of discharging	:	By tilting on discharge launders
15	Tilting mechanisms	:	Hydraulically operated along with over tilting limit switch.
16	Heat input	:	To be furnished by the Tenderer
	Holding Burners	:	Adequate no. of burners of suitable capacity for holding molten metal at 730 $\pm$5^{0}C Tenderer to furnish the details
17	Combustion air fan	:	1 No. for each furnace
	Capacity	:	To be furnished by the Tenderer
	Pressure	:	To be furnished by the Tenderer

© 2022 MECON LIMITED. All rights reserved

	HP rating of drive motor	:	Suitable energy efficient motor Tenderer to furnish the details
	Location of fan	:	As per layout mutually agreed
18	Doors (vertical opening)	:	
	Front door (electrically operated rise & fall type) non water cooled.	:	1 No.
	Material of construction	:	HRCS Casting & M.S
19	Molten metal receiving spout	:	Heat resisting cast steel suitably refractory lined
20	Molten metal discharging spout	:	Heat resisting cast steel suitably refractory lined
21	Pivot supports with bush	:	2 nos. trunnions on tilt axis side with M.S brackets.
22	Exhaust duct	:	1 No., common M.S exhaust duct with refractory lining for holding furnaces.
23	Discharge launder	:	Provided up to 0.5m beyond T – joint
24	Damper	:	1 No. pneumatically operated flap type damper for each furnace.
25	Self-supported chimney	:	1 No., common self-supporting chimney of M.S of adequate height from floor level, refractory lined upto its full height so as to conform to the latest pollution control standards and regulations.
	Code of construction	:	IS – 6533 (part I&II) with latest codes on pollution control norms
	Material	:	M.S plate of tested quality
26	Piping, valves & fitting	:	1 set each for combustion air, fuel gas (Propane/NG) main system, **compressed air system**, hydraulic oil system and water system.
27	Platform, ladder, walkway and hand railing etc.	:	1 set on each furnace as required on the roof and a platform for burner operation on side wall meeting the standard norms.
28	Electro-magnetic	:	1 set on each furnace

© 2022 MECON LIMITED. All rights reserved

	stirrer		
HYDRAULIC TILTING SYSTEM:			
1	Hydraulic power pack	:	Common hydraulic power pack for both the furnaces.
2	No. of tilting cylinders per furnace (along with over tilting limit switch)	:	2
3	Type of cylinders	:	Double acting
4	Total no. of pumps for both furnaces	:	3 (2 working and 1 standby)
5	Oil tank	:	To be indicated by the tenderer
6	Heat exchangers	:	To be indicated by the tenderer
7	Piping & valves	:	1 set
8	First fill of hydraulic oil and loss during commissioning	:	To be included as required
9	Maximum tilting angle	:	To be indicated by the tenderer
10	Normal tilting angle	:	To be indicated by the tenderer
11	Safe automatic descending of furnace in the event of power failure	:	To be Provided.
12	Metal flow rate	:	Tenderer to indicate, (based on 10t/h maximum casting speed)
13	Maximum tilting rate for up and down movement	:	Tenderer to indicate

TECHNOLOGICAL DESCRIPTION OF MELTING & HOLDING FURNACE

01. FURNACE CASINGS

The furnace casings will be fabricated from heavy mild steel plate of minimum 10mm thick stiffened with rolled steel sections to form a robust tank.

© 2022 MECON LIMITED. All rights reserved

Fabricated universal beams will form the main tank stiffening and will ultimately support the pivot brackets at the rear. At the front heavy rolled steel sections will form the reinforcement required to support the door gear and lifting cylinder brackets. Rolled steel beams will be formed to span the roof and extra stiffening will be provided around all openings such as metal inlet, burner mountings, door frames and pouring spouts.

Extra reinforcing will be incorporated into the furnace side walls structure where the tilt cylinder perform the lifting action, also on the opposite side wall where the tilt bearing blocks are located.

In the resting position, the furnace will be supported on heavy fabricated stools positioned in the pit.

The hearth should preferably be made from tested quality steel plate. Tenderer will submit test certificate of the plates from their supplier.

02. SKIRT PLATES

A heavy gauge Heat Resistant Cast Steel (IS 4522GR-3) skirt plate will be attached to the lower front face of the furnace underneath the sill to deflect molten metal from entering the pit.

Fabricated mild steel plates will similarly be fitted to the sides and rear of the furnace and in all cases skirts will protrude over the lip of the pit foundation.

03. CHARGE DOOR OPENINGS

One opening will be provided (full furnace width) to allow access for ingots charge/baled scrap charging and cleaning (for melting furnace) and One opening will be provided (full furnace width) for cleaning of dross (for holding furnace).

The door sill will be refractory lined. It will be protected by a heavy heat resisting cast iron/cast steel sill bolted back to the furnace structure in segments to allow for expansion.

© 2022 MECON LIMITED. All rights reserved

The sill will be surmounted by a heavy gauge continuous M.S plate. The lintel and jambs will be protected by a sloping heavy C.I front plate manufactured in sections to accommodate expansion and against which the door shall seal.

04. CHARGE DOORS

The outer door retaining side plates will be constructed from Heat Resistant HK Cast Steel or equivalent.
The door shall be modular type consisting of sections but mounted on a single frame, suspended on heavy chains running on sprockets and will be powered up and down by Electrically Operated gear box arrangement, directly coupled to the shaft with all associated control equipment. The door shall be operated from nearby local control posts.

05. INSPECTION DOORS

A small inspection door approx. 300 mm square shall be provided in one section of the main charging door. The door shall be manually operated and of the centre hinged swing open type. It shall be locked by means of manual toggle clamps.

06. PIVOT SUPPORTS

The furnaces shall be supported on two trunnions individually on the tilt axis side. The trunnion shall be hard steel pins carried in heavy fabricated steel brackets mounted on a heavy mild steel frame with a large base held down by foundation bolts. The pins run in bushes attached to fabricated mild steel brackets incorporated into the furnaces structure.

07. ACCESS

A platform shall be provided on each furnace roofs to service door gear, combustion air fan, damper etc. Low level platforms shall also be provided on each side to service burner equipment etc. Necessary ladders, walkways, with hand railings to approach all equipments,

© 2022 MECON LIMITED. All rights reserved

accessories, thermocouples, valves etc. for maintenance purpose shall be provided.

08. SAFETY DEVICES

Safety devices like low air pressure switches, Low fuel gas pressure switches, proximity switches, solenoid valves, (manually reset type) etc shall be provided for safe operation of each furnaces. Bidder may suggest additional safety devices as required suiting to their plant and equipment and operation requirement.

09. MOLTEN METAL RECEIVING DOOR CHUTE

The molten metal receiving opening shall be horizontally mounted on the side wall with suitable Heat Resistant Cast Steel sill plates. The opening shall be closed/opened by a lid operated by a pneumatically operated cylinder from the top of the furnace. The valve for the pneumatic operation of door should be located suitably near the door within the approach of the operator considering its inspection and maintenance requirement.

10. POURING SPOUT

The hearth shall be profiled towards the pouring spout. The spout shall be of a proven design made of Heat Resistant Cast Steel and shall be supplied in two pieces pivoted together via sprung clamped joint.

11. FLUE OFF-TAKE AND FLUE COLLECTOR HOOD

A stub type exhaust duct shall be situated in the side wall towards the rear of the furnace to discharge combustion products directly into a common collector hood which serves the 3 (three) Melting furnaces and 2 (two) holding furnaces separately. The individual pressure control dampers shall be located over these ducts. Each of the furnaces shall have a pneumatically operated flap type damper. An opening with door shall be provided for removal of dusts collected the entire off take portions.

© 2022 MECON LIMITED. All rights reserved

12. FLUE DUCT AND STACK

The hot flue gases from the collector hood shall be carried in a horizontal flue duct which shall be connected directly to the common stacks. These will be of M.S Construction. The stack will be self-supporting& of height as per latest pollution control standards, but minimum height shall be not less than 35 meters. The stack will have four nos. gas sampling ports around its periphery diametrically opposite locations. The ports will have flanged covers. A platform with hand railing shall be provided at the gas sampling level. The position of the gas sampling points shall be at least 8D away from the point of connection of flue duct with stack. There will be a spiral stair up to the sampling platform and monkey ladder beyond this upto top of chimney. Necessary platform shall be provided at this level.

The flue-off take, hood, flue duct & stack will be lined as described under refractory lining section.

The stack should be located adjacent to the proposed furnaces and shall be equipped with all required safety devices and necessary lighting to fulfill standard norms and statutory requirement.

The positions of various auxiliaries and the overall layout of the furnaces & allied equipment will be as shown.

13. COMBUSTION SYSTEM

The furnace shall be of Propane/Natural Gas fired type. Burners shall be suitable for operation with Propane/Natural Gas.

Propane/NG burners will be installed which shall be situated towards the front of each side wall, firing away from the door end and angled down slightly to ensure good heat exchange with the aluminium. Each burner shall be adequately rated to achieve the required melt rate of furnace.

One no. combustion air blower will be provided for each furnace.

© 2022 MECON LIMITED. All rights reserved

The above blowers will be centrifugal type & fabricated from mild steel plate suitably reinforced for smooth operation.

- The impeller shall be designed for flat pressure characteristics statically & dynamically balanced & mounted directly on the motor shaft.
- The blowers shall be mounted on anti-vibration mountings. Each blower will have inlet filter cum silencer.
- Each combustion blower will have a capacity which is 20% higher than theoretical requirement. Rating of motor to be indicated by Tenderer based on design scheme.

Scope of supply of the tenderer shall include complete air pipe lines from the blowers to individual burner including valves & fittings. The air pipes shall be of mild steel materials.

The Purchaser shall provide NG/ Propane at TOP. Necessary Pipes, Valves, Fittings, Control Valves, Flow Measuring instruments etc. shall be included by the Tenderer.

14. LAUNDER SYSTEM DESCRIPTION

Launder from melting furnace up to the "T" joint and then into a common launder up to distance of 0.5 m to take molten metal to Holding Furnace. One launder from each holding furnace up to the 'T' joint and then into a common launder up to distance of 0.5m to take molten metal to the casting machine. The launders shallbe pre-heated by means of NG/Propane fired burners to be provided by the tenderer.

LAUNDER CONSTRUCTION

The launder shall be constructed from minimum 8mm thick M.S plate generally in sections of 2m to 3m in length with bolted flanged joints incorporating ceramic gaskets.
Removable covers will be fitted to the launder;. The hinged covers shall be arranged to open away from the tending side.

© 2022 MECON LIMITED. All rights reserved

LAUNDER COVERS

The removable covers shall be lined with Hysil board which will seat onto capping plates on the top of each launder segment.

Handles and stops shall be fitted for manual operation.

LAUNDER LINING

The inner lining shall be of precast slabs of 95% Al_2O_3 quality in 500mm length with male / female joints backed up by 25mm thick Ceramic fiber blanket.

LAUNDER PRE-HEATING

Tenderer shall provide at least 2 nos. portable burners suitable for operation with NG/Propane for heating the launder.

Burners, pipes, valves, fittings, hoses etc are included in tenderer scope of work.

LAUNDER SUPPORTS

Supports shall be fabricated from mild / rolled steel sections to position the launders, at the required operating height with screwed adjusters to provide fine adjustment.

The supports shall be designed to accommodate movement of the launder during expansion and contraction.

The supports shall be at approximately 2m pitch and foundation bolts shall be included.

Scope of work for unloading, storage, erection, testing, commissioning & PG test

- Unloading of the material at the successful tenderer's store at site on receipt of material at Nellore district of Andhra Pradesh.

© 2022 MECON LIMITED. All rights reserved

- Custody, preservation and conservation of all equipment and material up to the handing over of the Plant & equipment after commissioning.
- Inspection of all the items/ units prior to installation to ensure that no damage has occurred during storage and transportation.
- All assemblies/ sub-assemblies of the equipment, wherever applicable, shall be dismantled. The bearings, gears and other components shall be thoroughly cleaned and lubricated before assembly.
- The successful tenderer shall check the civil work and facilities, provided by the employer to ensure conformity with the installation requirements.
- The successful tenderer shall make his own arrangement for handling the equipment, pipelines, refractories, instrumentation and electrics at the stores and transporting it to the site for installation.
- Installation and erection of all equipment and auxiliary services with proper alignment, leveling and fixing / fastening and laying and termination of all associated power & control cables from the Employer's switchboards. Complete erection shall be carried out in accordance with approved drawings and erection manual.
- Minor civil work like chipping and grouting work shall be carried out by successful tenderer.
- Installation of cable supporting structures in cable cellars, cable tunnel, cable channel or overhead cable bridge for interplant cabling.
- Installation of pulpits (civil work shall be carried out by civil contractor for which drawings to be furnished by the successful tenderer).
- Scope includes arranging visits by respective automation, instrumentation & control equipment manufacturer's

© 2022 MECON LIMITED. All rights reserved

representatives at site, as & when required, during installation, erection & commissioning.

- Preparation of earthing pit, supply of earthing materials including cables and installation of separate earthing system for power and instrument signal earthing.
- After erection, all equipment having moving part, subject to pressures or voltages shall be given trial operation. All modifications and rectifications required during the trial operation or required for proper operation shall be done at his own cost by the Tenderer as accepted by the Employer. Rotating equipment shall be checked for proper direction of rotation and shaft alignment. Equipment subject to pressures shall be carefully examined for leakage. All equipment, such as pressure taps, temperature measurement connections, flow measurement devices etc. shall be provided by the Tenderer.
- Calibration of all the instruments. Successful Tenderer shall arrange tools, tackles and consumables as may be required for erection, testing, calibration and commissioning activities.
- To conduct Preliminary Tests on individual equipment/ unit, group of equipment to ensure that the equipments as erected conform to the approved drawings and manuals. Cleaning, flushing and pressure testing of piping, valves, hydraulic system, running tests of blowers, fans, combustion system, checking of sealing arrangement, alarm & annunciations, safety interlocks etc. will be carried out. Details of tests shall be mutually agreed upon at least two weeks in advance.
- Commissioning of the furnaces and auxiliary facilities in integrated manner for entire plant. Commissioning shall include synchronization of facilities under scope of this package with mill operation and hooking up the furnace automation with utility services.
- Performance guarantee tests will be conducted within twenty-four (24) months from the effective date of contract for successful commissioning to establish the performance parameters as per the

© 2022 MECON LIMITED. All rights reserved

Technical specification. Successful Tenderer will carry out any adjustments/ fine tuning of the equipment, supplied by them to demonstrate the Performance guarantee parameters.

- Periodic cleaning of site.
- All materials required for fabrication, construction, testing and inspection shall be supplied by the Tenderer. No material shall be free issue to the Tenderer.
- The successful tenderer shall supply all required manpower, tools and related equipment, all hoisting equipment, all necessary scaffoldings, all necessary transporting equipment, consumables. Construction and erection materials, petrol, diesel oil, Kerosene, solvents, sealing compound, tapes, brazing and soldering materials, welding and brazing gases, erection bolts, nuts and packing sheets/compounds, temporary supports, wooden blocks, spacers, templates, jute and cotton wastes, sand/emery paper etc. as required for the satisfactory completion of work.
- Adequate segmentation and interconnections shall be provided in the distribution networks to afford maximum flexibility of operation and maintenance.
- On completion of the work, the Tenderer shall remove and dispose off all rubbish and other unsightly materials caused by his working to a distance of two kilometer from the site or as directed by the Employer and thereby leaving the premises in good, clean, safe and operable condition.
- Any special civil engineering material, if required, shall be specified in the offer and the same shall be supplied by the successful tenderer. Supervision of such work shall be carried out by the successful tenderer.

10.01.1.C Vertical Direct Chill Slab Casting Machine

Launders

© 2022 MECON LIMITED. All rights reserved

The launder should be supplied to ensure smooth flow of molten aluminium alloy from three nos. of Propane/natural gas-fired hydraulic tilting, melting furnaces to two nos. of holding furnaces and then from holding furnaces to the two nos. of vertical direct chill casting unit in the required quantity and at the required temperature. The launders should be designed in a manner to cater to any breakdown or emergency in any of the casting units i.e., a cross launder system should be made available for smooth transfer of molten metal from either of the holding furnaces to any of the vertical direct chill casting unit.

Launders should be made of steel and lined with suitable precast refractory for low heat loss. A suitable launder heating system shall be provided if required. Launders should be suitably covered and insulated if demanded as per system design. Dummy small tundish preparation table with casting operator's kit box to be provided.

Launders		
SL. No.	**Description**	**Remarks**
i.	Recommended Temperature at Battery limit for receipt of metal in launder.	To be furnished by tenderer
ii.	Cross Sectional size of Launder	To be furnished by tenderer
iii.	Launder Refractory Material & Thickness	To be furnished by tenderer
iv.	Launder Plate Material & Thickness	To be furnished by tenderer
v.	Launder cover, if necessary	To be furnished by tenderer
vi.	Skin Temperature of Launder	To be furnished by tenderer
vii.	Type of Metal Level Controller	To be furnished by tenderer
viii.	Launder heating system, if required	To be furnished by tenderer

© 2022 MECON LIMITED. All rights reserved

Grain Refining System

A suitable grain refining system to improve the grain structure of the cast product should be offered. This system may preferably be of wire feeding system type to feed a grain refiner rod constantly into the molten metal.

Grain Refining System		
SL. No.	**Description**	**Remarks**
i.	Speed of rod feeder (Range)	To be furnished by tenderer
ii.	Consumption of wire rod per ton of hot metal	To be furnished by tenderer
iii.	Diameter of rod	To be furnished by tenderer
iv.	Weight of wire rod coil to be fed	To be furnished by tenderer
v.	Composition of rod	To be furnished by tenderer
vi.	Relevant operational parameters, in case, other system has been offered.	To be furnished by tenderer

Metal Degassers

A dedicated degassing unit for efficient removal of hydrogen, alkali metals, and non-metallic inclusions from molten aluminum metal shall be supplied.

Preferably a spinning rotor type degassing system should be used, which is suited for an in-line degassing system with duplex tilting type, electrically operated for raise/lower/drain and easy for maintenance. The degasser should consist of graphite rotor and impeller.
Suggested range to achieve quality is 0.10 cc of hydrogen per 100 gm of molten metal (LECO/ALSCAN or equivalent).

© 2022 MECON LIMITED. All rights reserved

Safety features should be incorporated for the operator's safety. The unit should be of robust design and construction.

Metal Degasser		
SL. No.	**Description**	**Remarks**
i.	Type of De-gasser	To be furnished by tenderer
ii.	Metal Flow rate – Maximum & Minimum	To be furnished by tenderer
iii.	Number of Rotors	To be furnished by tenderer
iv.	Rotor Material (shaft, blade etc.), if offered	To be furnished by tenderer
v.	Rotor Speed Range	To be furnished by tenderer
vi.	Rotor Lubrication System	To be furnished by tenderer
vii.	Degasser refractory material	To be furnished by tenderer
viii.	Motor rating	To be furnished by tenderer
ix.	Gas consumption details	To be furnished by tenderer
x.	Inlet pressure for each gas used	To be furnished by tenderer
xi.	Flow rate for each gas used	To be furnished by tenderer
xii.	Operating Temperature range	To be furnished by tenderer
xiii.	Degasser heating system, if any	To be furnished by tenderer
xiv.	Final H_2 level (using N_2 gas as degassing media)	To be furnished by tenderer
xv.	Alkali removal - Na, Ca, Li	<1 ppm output
xvi.	Inclusion removal	To pass 60 ppi Ceramic Foam Filter (CFF)
xvii.	Degassing Efficiency	To be furnished by tenderer

© 2022 MECON LIMITED. All rights reserved

Metal Degasser		
SL. No.	**Description**	**Remarks**
xviii.	Weight of complete degassing unit	To be furnished by tenderer
xix.	Dimension of complete Degasser Unit	To be furnished by tenderer
xx.	Relevant operational parameters, in case, other system has been offered.	To be furnished by tenderer

Metal Filtration System

A suitable hot metal filtration system shall be used for removal of metallic and non-metallic inclusions. It may be refractory lined ceramic foam filtration system and deep bed filtration system or superior filtration unit. The filter should have a dual unit with one unit in service at a time.

Metal Filtration System		
SL. No.	**Description**	**Remarks**
i.	Filter Material	To be furnished by tenderer
ii.	Life of filter (in terms of metal passed)	To be furnished by tenderer
iii.	Pore density	To be furnished by tenderer
iv.	Filter cake arrangement (Horizontal / Vertical)	To be furnished by tenderer
v.	Metal velocity through the filter	To be furnished by tenderer
vi.	Pressure drop between inlet and outlet of filter	To be furnished by tenderer
vii.	Operating Temperature range	To be furnished by tenderer
viii.	Dimensions & wt. of filtration unit	To be furnished by tenderer

© 2022 MECON LIMITED. All rights reserved

Metal Filtration System		
SL. No.	**Description**	**Remarks**
ix.	Refractory material used	To be furnished by tenderer
x.	Heating arrangement	To be furnished by tenderer
xi.	Relevant operational parameters, in case, other system has been offered.	To be furnished by tenderer

Dross Collection and Processing Unit

The plant will have a dedicated Dross Collection and Processing Unit. Cold dross processing shall be carried out by pulverizer mill followed by screening operation. Crushed dross shall then pass through eddy current separator for separation of metal and aluminium oxides.

Dross Collection and Processing Unit		
SL. No.	**Description**	**Remarks**
i.	Type of Dross Collection and Processing Unit	To be furnished by tenderer
ii.	Pulverizer Mill	To be furnished by tenderer
iii.	Equipment for Screening Cold Dross	To be furnished by tenderer
iv.	Eddy Current Separator	To be furnished by tenderer
v.	Relevant operational parameters, in case, other system has been offered.	To be furnished by tenderer

General description of Casting Machine

© 2022 MECON LIMITED. All rights reserved

The casting line shall be of the Vertical Direct Chill type, with stationary molds cooled with water, being capable of casting several billets / slabs per drop. There shall be two DC Casting machines out of which one complete unit of vertical DC Casting will be dedicated for production of slabs and the other vertical DC Casting should have the provision of producing both slabs and billets. For the first Vertical DC Caster dedicated for casting of slabs there shall be a provision of three set of molds of different sizes as mentioned below (detailed in PART A) with their respective spares. For the second Vertical DC Caster suitable for casting both slabs and billets there shall be a provision of three set of slab casting molds of different sizes as mentioned below (detailed in PART A) with their respective spares and three set of billet casting molds of different sizes as mentioned below (detailed in PART B) with their respective spares. Each drop of a single DC casting shall be able to produce up to 50t of rolling slab and/or billet (of varying number, depending on the cross section).

PART A - Slab Casting

The treated molten metal will be transferred via a distribution trough which is preheated. The distribution trough should contain spouts with control pins which should have their own heating arrangement to prevent the freezing of metal in the spout. The treated metal should enter through a spout which in turn shall be connected to the mold table of the casting machine.

The mold table assembly shall consist of molds with different number of strands depending on the size of the billet & slab to be produced, with water hose connections for allowing the molten metal to cool. After, the molten metal starts cooling it is held by a stainless steel starting head with a base that lies on the hydraulic cylinder of definite stroke allowing a downward movement for the formed billet & slab. The casting cylinder shall be attached with an internal guidance system and torque limiter which restricts the rotational movement of the cylinder. A hydraulic power unit should be set up which controls the movement of the cylinder and also keeps in check the water level in the pit and the oil level. The casting machine shall comprise of mold pre-heater to ease the

© 2022 MECON LIMITED. All rights reserved

flow and reduce thermal damage to the casting. A mold spray system should be attached to the mold to make sure no sticking action occurs between the molten metal and the mold.

An appropriate MMLC unit (Molten metal level control) should be incorporated with the casting machine. The casting unit shall comprise of slab cooling tunnel and layer conveyor followed by a steam hood and exhaust stack. The molten metal temperature shall be continuously measured with a thermocouple and displayed to the casting machine operator.

The casting machine should be powered with a digitally controlled variable speed AC drive motor.

The casting assembly shall be cooled by water spraying nozzles. Improvised cooling water spraying nozzles should be provided wherever required. Zone-wise cooling water flow control to be provided.

The cooling water distribution header should be remotely located for convenient access. PLC-based recipe-driven cooling water spray control should be provided. A cooling water system is to be designed considering thermal load ambient temperature in hot summer. Provision for emergency water control should be installed.

Any heat exchanger system in the casting system should have a stand-by heat exchanger.

The nozzles should be preferably of fixed orifice type. Any variation required in the flow should be adjusted in the individual headers through control valves.

Two nos. of Industrial HMI screen in each station (viz. A, B, C) to be provided. Hydraulic Pressure of Sensor Arm to be given in Console-A HMI.

Major Equipments required in Casting Machine: -

1) Casting Cylinder and associated components

© 2022 MECON LIMITED. All rights reserved

The casting cylinder should be of hydraulic type suitable for minimum 50 ton drop capacity vertical casting machine and a stroke greater than 6500 mm i.e., the cast length is 5500 mm and extra stroke for easy removal of the cast product from the casting pit. The cylinder should consist of an internal anti rotation rod guide system, envisaged with torque limiter and shear pin to protect it against overload. The cylinder should be designed to withstand a wide range of casting speed required to meet the production quality as well as capacity of different grades as defined in the product mix. The hydraulic fluid to be used should be ISO certified. The piston/ram to be used should have high resistance to abrasion, erosion and enhanced corrosion resistance. Sensors for measuring the movement of cylinder should be available with proper casing for under water operation.

Casting Cylinder		
SL. No.	**Description**	**Remarks**
i	Total lifting capacity	To be furnished by Tenderer
ii	Type of casting cylinder	Single acting with internal anti rotation guide system
iii	Coating around cylinder surface	To be furnished by Tenderer
iv	Thickness of Coating	To be furnished by Tenderer
v	Surface Finish	To be furnished by Tenderer
vi	Surface Hardness	To be furnished by Tenderer
vii	Type of Internal guidance system	To be furnished by Tenderer
viii	Piston/Ram material	To be furnished by Tenderer
ix	Piston/Ram diameter	To be furnished by Tenderer
x	Stroke	Greater than 6500 mm
xi	Design pressure	To be furnished by Tenderer
xii	Test pressure	To be furnished by Tenderer
xiii	Required external load (platen, tooling) to get a start pressure in top position	To be furnished by Tenderer

© 2022 MECON LIMITED. All rights reserved

Casting Cylinder		
SL. No.	**Description**	**Remarks**
xiv	Maximum cylinder load	To be furnished by Tenderer
xv	Cast speed range	As per design requirements
xvi	Maximum lifting speed (w/o load)	To be furnished by Tenderer
xvii	Angle of rotation over full stroke without load and torque:	To be furnished by Tenderer
xviii	Hydraulic fluid	To be furnished by Tenderer
xix	Maximum operation temperature	To be furnished by Tenderer
xx	Horizontal platen deflection	To be furnished by Tenderer
xxi	Rotational tolerance	To be furnished by Tenderer

Torque Limiter and associated components		
SL. No.	**Description**	**Remarks**
i	Material	To be furnished by Tenderer
ii	Maximum Torque bearing capacity	To be furnished by Tenderer
iii	Number of shear pins required	To be furnished by Tenderer
iv	Cylinder Mounting Rings provided or not	Yes/No
v	Leveling Wedges provided or not	Yes/No
Position verification sensors		
i	Number of sensors	Minimum two
ii	Type of sensors	To be furnished by Tenderer

2) Hydraulic power unit

© 2022 MECON LIMITED. All rights reserved

This unit should consist of variable volume pressure compensated pumps, motors, closed loop filtration system, heat exchanger, necessary valves, fittings, instruments, hydraulic fluid reservoir.

Hydraulic logic circuit manifold for controlling the movement and position of casting cylinder, cast speed circuit for linear movement of cylinder, float switches to notify the oil level through the PLC. Pressure gauges for the casting cylinder system pressure and pump pressure settings. Filter clogging indicators for the loop filtration systems and cast speed circuit for feedback to the casting center PLC. Emergency cast circuit with manually adjustable flow control valve. Other required port flanges and fittings for field connection.

For detailed specification regarding hydraulic power unit refer to chapter 10.12 - clause 10.12.02 (Hydraulic and Lubrication).

3) Mold Table Assembly

The mold table should be designed to accommodate minimum 5 strands of 450 mm * 1600 mm, 4 strands of 550 mm * 2000 mm & 3 strands of 650 mm * 2400 mm slab casting. The table should have balanced water distribution system with appropriate number of water hose connections per stand. There should be pneumatic / hydraulic mold alignment system and pneumatic / hydraulic water control system. The table should have high corrosion resistance. A suitable mechanism for positioning of the mold table for easy removal of the cast slabs and easy maintenance of the mold table with its accessories should be provided.

Mold Table Assembly		
SL. No.	**Description**	**Remarks**
i	Number of strands	
	a) 450 mm * 1600 mm	5 strands
	b) 550 mm * 2000 mm	4 strands

© 2022 MECON LIMITED. All rights reserved

Mold Table Assembly		
SL. No.	**Description**	**Remarks**
	c) 650 mm * 2400 mm	3 strands
ii		
iii	Water hose connection per stand	To be furnished by the Tenderer
iv	Mold table movement mechanism	To be furnished by the Tenderer. Can be tilt type/rolling type.
v	Type of Mold table alignment system	To be furnished by the Tenderer
vi	Mold water control system	Tenderer to Furnish the details
vii	Type of Coating applied	Details to be furnished by the Tenderer
viii	Approximate external dimension	To be furnished by the Tenderer

4) Distribution trough and associated components

The distribution trough should be such that the deflection of the trough is minimum. The outer walls made of stainless steel should support the trough and should have an arrangement to keep the outer walls cool. The inner shell trough should support the refractory and allow for expansion/shrinkage with each cast. The refractory should have low thermal conductivity and a low coefficient of thermal expansion. The trough should have a self-supporting wire way and heat shield. Trough design has to accommodate quick change out design of non-contact head sensor and pin positioner.

Trough pre-heaters, either gas or electrically fired, should be installed for easy flow of molten metal. The downspout discharge should be below the metal level of the trough to keep the surface of the metal placid and calm to reduce turbulence and unnecessary oxidation of the molten aluminum. Electrical/Gas spout heaters are to be placed in the spout and removed prior to the cast to eliminate aluminium from freezing in the spout. Inductive level sensors are to be used for measuring the level

© 2022 MECON LIMITED. All rights reserved

of molten metal in the mold bore. Metal control actuators are to be used for automatically setting the control pins and moving them to the desired pre-cast position, this enhances consistency from cast to cast. A suitable control pin heating system should be provided.

Distribution trough and associated components		
SL. No.	**Description**	**Remarks**
i	Number of walls in trough	2
ii	Specification of outer walls of trough	Steel walls for supporting the trough with stainless steel reflectors on outside and installed with an arrangement to cool the walls
iii	Specification of inner walls of trough	To be furnished by the Tenderer. Should be able to expand/shrink as per cast and support the refractory.
iv	Refractory	To be furnished by the Tenderer. Should have low thermal conductivity and low coefficient of thermal expansion.
v	Type and number of Trough Preheater	Details to be furnished by the Tenderer
vi	Heat shield	Details to be furnished by the Tenderer
vii	Head sensors	Details to be furnished by the Tenderer
viii	Pin positioners	Details to be furnished by the Tenderer
ix	Type of Trough movement mechanism	To be furnished by the Tenderer
x	Number and Type of Spout heaters	To be furnished by the Tenderer
xi	Rating of spout heaters	To be furnished by the Tenderer
xii	Alarming system for	Details to be furnished by the

© 2022 MECON LIMITED. All rights reserved

Distribution trough and associated components		
SL. No.	**Description**	**Remarks**
	spout heaters	Tenderer
xiii	Indicators for control pin heating	Details to be furnished by the Tenderer
xiv	Type of level sensors for maintaining level of molten metal in mold bore and its specifications	To be furnished by the Tenderer

5) Mold and starting block

- 5 strand tooling for 450 mm x 1600 mm including: Mold table, starting head base, 5 x molds, 5 x bottom blocks and wipers.
- 4 strand tooling for 550 mm x 2000 mm including: Mold table, starting head base, 4 x molds, 4 x bottom blocks and wipers.
- 3 strand tooling for 650 mm x 2400 mm including: Mold table, starting head base, 3 x molds, 3 x bottom blocks and wipers.

The mold should be designed in a manner as to produce drop of 50 t for each casting. The mold should have the design to provide better cast surface quality, increased production, less scrap generation and reduced mold maintenance. The molds should have a mold alignment system in order to automatically align the mold to the starting head. Casting lubricant if required should be attached to the mold. Water control valves with appropriate spray holes should be designed as per the mold requirement.

For different alloys, provisions should be made so that the water set-up can be changed in the PLC program to start casts with different combinations of water jets. Water filter screens for added protection against foreign particles if required can be designed into the mold. Starting block made of stainless steel should be placed just below mold which acts as dummy block for initial freezing of molten metal.

© 2022 MECON LIMITED. All rights reserved

Starting Head base assembly		
SL. No.	**Description**	**Remarks**
i	Design of head base assembly	To be furnished by the Tenderer
ii	Material	To be furnished by the Tenderer
iii	Coating applied	To be furnished by the Tenderer
iv	Approximate external dimension	To be furnished by the Tenderer
v	Starting head alignment system	To be furnished by the Tenderer
vi	Number and type of Mold table cover plates	To be furnished by the Tenderer
vii	Number and type of Starting head base cover plates	To be furnished by the Tenderer
Molds		
i	Dimension of molds	To be furnished by the Tenderer
ii	Number of molds	To be furnished by the Tenderer
iii	Type of Cooling technology	To be furnished by the Tenderer
iv	Type and number of oil/graphite spray injectors	To be furnished by the Tenderer
v	Material and profile of bore	To be furnished by the Tenderer
vi	Material of mold	To be furnished by the Tenderer
vii	Type and number of water filter screens	To be furnished by the Tenderer

© 2022 MECON LIMITED. All rights reserved

Starting Head base assembly		
SL. No.	**Description**	**Remarks**
viii	Wiper assembly if any	To be furnished by the Tenderer
ix	Type of Mold alignment system	To be furnished by the Tenderer

6) Cooling water supply and control

The piping supplying the cooling water should be coated to increase the life of pipes. The piping and wiring design should be of the nature to reduce field wiring. Water flow control valves with appropriate motor actuators should be provided allowing linear flow and more accurate control. Magnetic flow meter connected to the PLC should be available to measure the flow of water. Proper arrangement to measure the water temperature should be made. Emergency water valve should be available to prevent molds from getting overheated.

Cooling water system is to be designed considering thermal load ambient temperature in hot summer. An automatic self cleaning strainer or its equivalent should be available to allow continuous cooling water flow with minimum pressure loss. An appropriate water level control system is must in casting pits for indication of low water levels.

However, tenderer may offer better alternative systems to meet the process requirement clearly indicating the merits over other systems along with evidence.

Cooling water control		
SL. No.	**Description**	**Remarks**
i	Type of water flow control valve	To be furnished by the Tenderer
ii	Number of water flow	To be furnished by the Tenderer

© 2022 MECON LIMITED. All rights reserved

Cooling water control		
SL. No.	**Description**	**Remarks**
	control valve	
iii	Specification of valve i.e., size based on pressure etc.	To be furnished by the Tenderer
iv	Type of water shut off valve	To be furnished by the Tenderer
v	Type of flow meter	Magnetic flow meter
vi	Equipment for water temperature measurement	To be furnished by the Tenderer
vii	Number and Type of Emergency water valve	To be furnished by the Tenderer
viii	Type of Water cleaning system/ strainer	To be furnished by the Tenderer
ix	Pit water level control system	To be furnished by the Tenderer

7) Launder metal level control

Laser sensors for determining the metal level in the launder with alarm to notify for high or low metal levels are to be provided. The sensors should be put in such a way that the PLC gets the input from sensors and a control loop then transmits the output for necessary action to control the metal level as required (Eg: - controlling the tilt of furnace). Coolers like vortex coolers or equivalent should be attached with the laser sensors to keep the sensors cool and laser lens clean. Launder dams with flow control valves should be available at critical positions to allow efficient fill of the launder and minimize metal temperature loss.

However, tenderer may offer better alternative systems to meet the process requirement clearly indicating the merits over other systems along with evidence.

Launder metal level control

© 2022 MECON LIMITED. All rights reserved

SL. No.	Description	Remarks
i	Type of sensors	Laser type
ii	Range of sensors	To be furnished by the Tenderer
iii	Protection for sensors and cooling media if any	To be furnished by the Tenderer
iv	Number of sensors	To be furnished by the Tenderer
v	Position of sensors	To be furnished by the Tenderer
vi	Type of Launder dams	To be furnished by the Tenderer
vii	Number of Launder dams	Minimum four
viii	Position of Launder dams	To be furnished by the Tenderer
ix	Refractory for Launder dams	To be furnished by the Tenderer

8) Steam exhaust plenum

During casting, steam is generated, this can condense on casting station equipment and help create oxides on the surface of the molten metal in the mold table, distribution trough and molds. The steam can also make it impossible for the casting operator to observe the surface of the ingot or billet as they are being cast.

Steam exhaust plenum should be designed in to the pit shield. The plenum consists of a rectangular duct that is slightly shorter than the length of the casting pit, with a narrow hooded slot for steam entry. The hood over the slot prevents cooling water from entering the duct directly. Appropriate coating, if required should be made on it.

PART B - Billet Casting

The treated molten metal will be transferred via launder system which in turn is connected to mold table of the vertical DC casting machine.

The mold table assembly shall consist of molds with different number of strands depending on the diameter of the billet to be produced, with

© 2022 MECON LIMITED. All rights reserved

water hose connections for allowing the molten metal to cool. After, the molten metal starts cooling it is held by a stainless steel starting head with a base that lies on the hydraulic cylinder of definite stroke allowing a downward movement for the formed billet. The casting cylinder shall be attached with an internal guidance system and torque limiter which restricts the rotational movement of the cylinder. A hydraulic power unit should be set up which controls the movement of the cylinder and also keeps in check the water level in the pit and the oil level. The casting machine shall comprise of mold pre-heater to ease the flow and reduce thermal damage to the casting. A mold spray system should be attached to the mold to make sure no sticking action occurs between the molten metal and the mold.

It should be made sure that the height of the mold table during billet casting should match the height of distribution trough during casting of slabs as it guarantees minimum movement of launder system during interchangeability of casting product in the same vertical DC Casting machine.

An appropriate MMLC unit (Molten metal level control) should be incorporated with the casting machine. The casting unit shall comprise of billet cooling tunnel and layer conveyor followed by a steam hood and exhaust stack. The molten metal temperature shall be continuously measured with a thermocouple and displayed to the casting machine operator.

The casting machine should be powered with a digitally controlled variable speed AC drive motor.

The casting assembly shall be cooled by water spraying nozzles. Improvised cooling water spraying nozzles should be provided wherever required. Zone-wise cooling water flow control to be provided.

© 2022 MECON LIMITED. All rights reserved

The cooling water distribution header should be remotely located for convenient access. PLC-based recipe-driven cooling water spray control should be provided. A cooling water system is to be designed considering thermal load ambient temperature in hot summer. Provision for emergency water control should be installed.

Any heat exchanger system in the casting system should have a stand-by heat exchanger.

The nozzles should be preferably of fixed orifice type. Any variation required in the flow should be adjusted in the individual headers through control valves.

Two nos. of Industrial HMI screen in each station (viz. A, B, C) to be provided. Hydraulic Pressure of Sensor Arm to be given in Console-A HMI.

Major Equipments required in Casting Machine: -

1) **Casting Cylinder and associated components** - The casting cylinder should be of hydraulic type suitable for minimum 50 t drop capacity vertical casting machine and a stroke greater than 6500 mm i.e., the maximum cast length is 6500 mm and extra stroke for easy removal of the cast product from the casting pit. The Casting machine should be designed to facilitate atleast 4 number of casting per day. The cylinder should consist of an internal anti rotation rod guide system, envisaged with torque limiter and shear pin to protect it against overload The cylinder should be designed to withstand a wide range of casting speed required to meet the production quality as well as capacity of different grades as defined in the product mix.. The hydraulic fluid to be used should be ISO certified. The piston/ram to be used should have high resistance to abrasion, erosion and enhanced corrosion resistance. Sensors for measuring the movement of cylinder should be available with proper casing for under water operation.

© 2022 MECON LIMITED. All rights reserved

Casting Cylinder		
SL. No.	**Description**	**Remarks**
i	Total lifting capacity	To be furnished by Tenderer
ii	Type of casting cylinder	Single acting with internal anti rotation guide system
iii	Coating around cylinder surface	To be furnished by Tenderer
iv	Thickness of Coating	To be furnished by Tenderer
vi	Surface Finish	To be furnished by Tenderer
vii	Surface Hardness	To be furnished by Tenderer
viii	Type of Internal guidance system	To be furnished by Tenderer
ix	Piston/Ram material	To be furnished by Tenderer
x	Piston/Ram diameter	To be furnished by Tenderer
xi	Stroke	Greater than 6500 mm
xii	Design pressure	To be furnished by Tenderer
xiii	Test pressure	To be furnished by Tenderer
xiv	Required external load (platen, tooling) to get a start pressure in top position	To be furnished by Tenderer
xv	Maximum cylinder load	To be furnished by Tenderer
xvi	Cast speed range	As per design requirements
xvii	Maximum lifting speed (w/o load)	To be furnished by Tenderer
xviii	Angle of rotation over full stroke without load and torque:	To be furnished by Tenderer
xix	Hydraulic fluid	To be furnished by Tenderer
xx	Maximum operation temperature	To be furnished by Tenderer
xxi	Horizontal platen deflection	To be furnished by Tenderer
xxii	Rotational tolerance	To be furnished by Tenderer

© 2022 MECON LIMITED. All rights reserved

Casting Cylinder		
SL. No.	**Description**	**Remarks**
Torque Limiter and associated components		
SL. No.	**Description**	**Remarks**
i	Material	To be furnished by Tenderer
ii	Maximum Torque bearing capacity	To be furnished by Tenderer
iii	Number of shear pins required	To be furnished by Tenderer
iv	Cylinder Mounting Rings	To be furnished by Tenderer
v	Leveling Wedges	To be furnished by Tenderer
Position verification sensors		
i	Number of sensors	Minimum two
ii	Type of sensors	To be furnished by Tenderer

2) Hydraulic power unit

This unit should consist of variable volume pressure compensated pumps, motors, closed loop filtration system, heat exchanger, necessary valves, fittings, instruments, hydraulic fluid reservoir.

Hydraulic logic circuit manifold for controlling the movement and position of casting cylinder, cast speed circuit for linear movement of cylinder, float switches to notify the oil level through the PLC. Pressure gauges for the casting cylinder system pressure and pump pressure settings. Filter clogging indicators for the loop filtration systems and cast speed circuit for feedback to the casting center PLC. Emergency cast circuit with manually adjustable flow control valve. Other required port flanges and fittings for field connection.

For detailed specification regarding hydraulic power unit refer to chapter 10.12 - clause 10.12.02 (Hydraulic and Lubrication).

© 2022 MECON LIMITED. All rights reserved

3) **Mold Table Assembly -** The mold table should be designed to produce billets of diameter: - 8" - 9" (adjustable mold), 18" (fixed mold) and 26"(fixed mold). The number of strands for each billet size should be such that drop weight for each casting would be 50 t. The table should have balanced water distribution system with appropriate number of water hose connections per stand. There should be pneumatic/hydraulic mold alignment system and pneumatic/hydraulic water control system. The table should have high corrosion resistance. A suitable mechanism for positioning of the mold table for easy removal of the cast billets and easy maintenance of the mold table with its accessories should be provided.

Mold Table Assembly		
SL. No.	**Description**	**Remarks**
i	Number of strands: -	To be furnished by the Tenderer
	a) adjustable type 8" - 9"	
	b) fixed type 18"	
	c) fixed type 26"	
ii	Water hose connection per stand	To be furnished by the Tenderer
iii	Mold table movement mechanism	To be furnished by the Tenderer. Can be tilt type/rolling type.
iv	Type of Mold table alignment system	To be furnished by the Tenderer
v	Mold water control system	To be furnished by the Tenderer
vi	Type of Coating applied	To be furnished by the Tenderer
vii	Approximate external dimension	To be furnished by the Tenderer

© 2022 MECON LIMITED. All rights reserved

4) Mold and starting block -

- Adjustable mold having diameter of 8" - 9"
- Fixed type mold having diameter of 18"
- Fixed type mold having diameter of 26"

Number of strands for each size mold should be such that the total drop weight for each casting would be 50 t. The mold should perfectly fit to the mold table system. The mold should have the design to provide better cast surface quality, increased production, less scrap generation and reduced mold maintenance. The molds should have a mold alignment system in order to automatically align the mold to the starting head. Casting lubricant if required should be attached to the mold. Water control valves with appropriate spray holes should be designed as per the mold requirement.

For different alloys, provisions should be made so that the water set-up can be changed in the PLC program to start casts with different combinations of water jets. Water filter screens for added protection against foreign particles if required can be designed into the mold. Starting block made of stainless steel should be placed just below mold which acts as dummy block for initial freezing of molten metal.

Starting Head base assembly		
SL. No.	**Description**	**Remarks**
i	Design of head base assembly	To be furnished by the Tenderer
ii	Material	To be furnished by the Tenderer
iii	Coating applied	To be furnished by the Tenderer
iv	Approximate external dimension	To be furnished by the Tenderer
v	Starting head alignment system	To be furnished by the Tenderer
vi	Number and type of Mold	To be furnished by the Tenderer

© 2022 MECON LIMITED. All rights reserved

	table cover plates	
vii	Number and type of Starting head base cover plates	To be furnished by the Tenderer
Molds		
SL. No.	**Description**	**Remarks**
i	Dimension of molds	To be furnished by the Tenderer
ii	Number of strands for:	
	a) Adjustable mold having diameter of 8" - 9"	To be furnished by the Tenderer
	b) Fixed type mold having diameter of 18"	To be furnished by the Tenderer
	c) Fixed type mold having diameter of 26"	To be furnished by the Tenderer
iii	Type of Cooling technology	To be furnished by the Tenderer
iv	Type and number of oil/graphite spray injectors	To be furnished by the Tenderer
v	Material and profile of bore	To be furnished by the Tenderer
vi	Material of mold	To be furnished by the Tenderer
vii	Type and number of water filter screens	To be furnished by the Tenderer
viii	Wiper assembly if any	To be furnished by the Tenderer
ix	Type of Mold alignment system	To be furnished by the Tenderer

5) Cooling water supply and control - The piping supplying the cooling water should be coated to increase the life of pipes. The piping and wiring design should be of the nature to reduce field wiring. Water flow control valves with appropriate motor actuators should be provided allowing linear flow and more accurate control. Magnetic flow meter connected to the PLC should be available to measure the flow of water. Proper arrangement to measure the water temperature should be made. Emergency water valve should be available to prevent molds from getting overheated.

© 2022 MECON LIMITED. All rights reserved

Cooling water system is to be designed considering thermal load ambient temperature in hot summer. An automatic self cleaning strainer or its equivalent should be available to allow continuous cooling water flow with minimum pressure loss. An appropriate water level control system is must in casting pits for indication of low water levels.

Cooling water control		
SL. No.	**Description**	**Remarks**
i	Type of water flow control valve	To be furnished by the Tenderer
ii	Number of water flow control valve	To be furnished by the Tenderer
iii	Specification of valve i.e., size based on pressure etc.	To be furnished by the Tenderer
iv	Type of water shut off valve	To be furnished by the Tenderer
v	Type of flow meter	Magnetic flow meter
vi	Equipment for water temperature measurement	To be furnished by the Tenderer
vii	Number and Type of Emergency water valve	To be furnished by the Tenderer
viii	Type of Water cleaning system/ strainer	To be furnished by the Tenderer
ix	Pit water level control system	To be furnished by the Tenderer

6) Launder metal level control - Laser sensors for determining the metal level in the launder with alarm to notify for high or low metal levels are to be provided. The sensors should be put in such a way that the PLC gets the input from sensors and a control loop then transmits

© 2022 MECON LIMITED. All rights reserved

the output for necessary action to control the metal level as required (Eg: - controlling the tilt of furnace). Coolers like vortex coolers or equivalent should be attached with the laser sensors to keep the sensors cool and laser lens clean. Launder dams with flow control valves should be available at critical positions to allow efficient fill of the launder and minimize metal temperature loss.

Launder metal level control		
SL. No.	**Description**	**Remarks**
i	Type of sensors	Laser type
ii	Range of sensors	To be furnished by the Tenderer
iii	Protection for sensors and cooling media if any	To be furnished by the Tenderer
iv	Number of sensors	To be furnished by the Tenderer
v	Position of sensors	To be furnished by the Tenderer
vi	Type of Launder dams	To be furnished by the Tenderer
vii	Number of Launder dams	Minimum four
viii	Position of Launder dams	To be furnished by the Tenderer
ix	Refractory for Launder dams	To be furnished by the Tenderer

7) Steam exhaust plenum -During casting, steam is generated, this can condense on casting station equipment and help create oxides on the surface of the molten metal in the mold table and molds. The steam can also make it impossible for the casting operator to observe the surface of the billet as they are being cast.

Steam exhaust plenum should be designed in to the pit shield. The plenum consists of a rectangular duct that is slightly shorter than the length of the casting pit, with a narrow hooded slot for steam entry. The hood over the slot prevents cooling water from entering the duct directly. Appropriate coating, if required should be made on it.

© 2022 MECON LIMITED. All rights reserved

10.01.1. D Homogenising Unit Suitable for Cast Products

Cast products needs to be heated up to a specified temperature for homogenizing through a pre-defined thermal cycle to ensure the desired mechanical properties.

The broad details of Homogenising Unit shall be as per the following table:

SL. NO.	DESCRIPTION		DETAILS
1.	No. of Furnace		4 (Four)
2.	Purpose		Heat Treatment (HOMOGENISING) of Casted aluminium slabs & billets of various alloys
3.	Type of Furnace		To be indicated by the Tenderer
4.	Holding Capacity/charge loading capacity		50t each
5.	Charge material		Aluminium alloy slabs & billets of 2xxx, 5xxx, 6xxx, 7xxx and 8xxx series
6.	Size	Slab	400 mm to 650 mm (thick) 1000 mm to 2400 mm (Width) 2500 mm to 5500 mm (Length)
		Billet	8", 9", 18" and 26" dia and 2500 mm - 6500 mm (Length)
7.	Furnace maximum temperature		$620^{o}C \pm 10^{o}C$
8.	Operating temperature (heat treatment)		To be indicated by the Tenderer
9.	Furnace temperature uniformity		$\pm 5^{0}C$
10.	**Basic furnace (inside useful dimensions)**		
	Useful length		To be indicated by the Tenderer
	Useful width		To be indicated by the Tenderer
	Useful height		To be indicated by the Tenderer

© 2022 MECON LIMITED. All rights reserved

	Overall outside dimensions (Approx.)	
	Length	To be indicated by the Tenderer
	Width	To be indicated by the Tenderer
	Height (above floor level)	To be indicated by the Tenderer
11.	**Heat treatment cycle time (hrs.)**	
	Charging	As per operation
	Heating	To be indicated by the Tenderer alongwith grade
	Soaking	To be indicated by the Tenderer alongwith grade
12.	Cooling rate of charge	To be indicated by the Tenderer alongwith grade
13.	Nos. Of control zones	To be indicated by the Tenderer
14.	Furnace KW rating of heaters (total)/ burner connected load	To be indicated by the Tenderer

10.01.1.E Scalper suitable for Cast Products

A scalper shall be required to remove the surface layers from the cast products. The soundproof booth having two automatic doors with pneumatic drive in the entry and in the exit side for transition of cast products shall be used.

The scalper shall feature a self-adjusting system that controls the progress speed always according to the available torque.

Scalper		
SL. No.	**Description**	**Remarks**
i.	Type of Scalper	To be furnished by tenderer
ii.	Spindle Material	To be furnished by tenderer
iii.	Spindle Power	To be furnished by tenderer
iv.	Feeding Rate	To be furnished by tenderer

© 2022 MECON LIMITED. All rights reserved

Scalper		
SL. No.	**Description**	**Remarks**
v.	Depth of cut	To be furnished by tenderer
vi.	Mandrel/ Main Mill Group	To be furnished by tenderer
vii.	Side Mills, if required	To be furnished by tenderer
viii.	Entry, Intermediate and Exit Roller way/ Table	To be furnished by tenderer
ix.	Roughness of finished surface	To be furnished by tenderer
x.	Parallelism after milling	To be furnished by tenderer
xi.	Self adjusting system	To be furnished by tenderer
xii	Rolling Turnover device provided or not	To be furnished by tenderer
xiii.	Cross transfer unit	To be furnished by tenderer
xiv.	Tools Lubrication System	To be furnished by tenderer
xv.	Weight of complete Scalping unit	To be furnished by tenderer
xvi.	Dimension of complete Scalping unit	To be furnished by tenderer

10.01.1.F Band Sawing Machine suitable for Cast Products

High Speed Band Sawing Machine with a travelling head shall be required to cut large aluminium slabs and billets. The main moving parts include the travelling Sawing Unit and the blade rotation. The ends of the cast products needs to be removed to eliminate the areas where solidification is not uniform and this is done by the saw.

Band Sawing Machine		
SL. No.	**Description**	**Remarks**
i.	Type of Band Saw M/c	To be furnished by tenderer
ii.	Cutting Capacity	To be furnished by tenderer

© 2022 MECON LIMITED. All rights reserved

Band Sawing Machine		
SL. No.	**Description**	**Remarks**
iii.	Blade Size	To be furnished by tenderer
iv.	Blade Motor Rating	To be furnished by tenderer
v.	Blade Speed	To be furnished by tenderer
vi.	Blade Lifetime	To be furnished by tenderer
vii.	Cutting Axis (Whether single or multiple)	To be furnished by tenderer
viii.	Feeding Speed	To be furnished by tenderer
ix.	Accuracy	To be furnished by tenderer
x.	Roughness of finished surface	To be furnished by tenderer
xi.	Output (Number of slabs and/or billets/ hr)	To be furnished by tenderer
xii.	Cutting Fluid Type	To be furnished by tenderer
xiii.	Cutting Fluid Pump	To be furnished by tenderer
xiv.	Entry, Intermediate and Exit Roller way/ Table	To be furnished by tenderer
xv.	Rolling Turnover Device	To be furnished by tenderer
xvi.	Self adjusting system	To be furnished by tenderer
xvii.	Cross transfer unit	To be furnished by tenderer
xviii.	Tools Lubrication System	To be furnished by tenderer
xix.	Weight of complete Band Sawing unit	To be furnished by tenderer
xx.	Dimension of complete Band Sawing unit	To be furnished by tenderer
xxi.	Relevant operational parameters, in case, other system has been offered.	To be furnished by tenderer

10.01.1.G Chips Collection System suitable for Cast Products

© 2022 MECON LIMITED. All rights reserved

Chips Collection System shall be provided to collect aluminium chips which are then transferred to scrap collection area for remelting purpose. It should preferably be of pneumatic type.

A fan and the relevant Venturi system shall be present to suck the scraps produced which will then be sent to chips compactor.

A chips compactor shall be able to keep the different alloys separated and eliminate the undesired standstills.

Chips Collection System		
SL No.	**Description**	**Remarks**
i.	Type of Chips Collection System	Preferably pneumatic type
ii.	Specification of Fan and Venturi System	To be furnished by tenderer
iii.	Suction Pipe and Supporting Structure	To be furnished by tenderer
iv.	Type of Chips Compactor System	To be furnished by tenderer
v.	Relevant operational parameters, in case, other system has been offered.	To be furnished by tenderer
vi.	Type of Chips Transfer Unit	To be furnished by tenderer
vii.	Weight of Chips collection system	To be furnished by tenderer
viii.	Dimension of Chips collection system	To be furnished by tenderer

10.01.1.H Ultrasonic Inspection System for Slabs

A modern age Ultrasonic Inspection System should be provided for quality inspection of the slabs & billets as well as measuring the dimension of cast slabs. The system can be online and offline both type with ability to inspect slabs of dimensions upto 650 mm * 2400 mm * 5500 mm and billets with diameter upto 26" and length of 6500 mm.

© 2022 MECON LIMITED. All rights reserved

The system should be able to detect internal imperfections like non-metallic inclusions, metallic inclusions, porosity, insufficient homogenization, primary phase segregation etc and detect both surface & sub-surface defects such as flakes, slivers, cracks and checks. The system may preferably be provided to detect the surface flatness data and transform them into an absolute value of material to be removed.

A typical Ultrasonic inspection equipment consists of functional units such as a pulser to provide high voltage electrical energy, a transducer which works to convert this electrical energy to ultrasonic frequency, a receiver which works to receive the ultrasonic frequency after it passes through the test piece and a couplant which works as an efficient conductor between transducer and test piece. The altered sound wave is reflected in the amplitude of the wave reading device.

Early detection of defects is beneficial in a manner that the operator can take quick action to correct the problem and minimize the production of defective products.

Ultrasonic Inspection System		
SL No.	**Description**	**Remarks**
i.	Type of Ultrasonic Inspection System	Online and Offline both. (during casting and after casting)
Ii.	Method	To be furnished by the Tenderer
ii.	Test Sensitivity	
	---- For internal Imperfections	To be furnished by the Tenderer
	---- For Surface Imperfections	To be furnished by the Tenderer
iv.	Number of UT probes	To be furnished by the Tenderer
vi.	Lifetime of probe	To be furnished by the Tenderer
vii.	Couplant	To be furnished by the Tenderer
viii.	Pre-wetting/ Cleaning unit	To be furnished by the Tenderer

© 2022 MECON LIMITED. All rights reserved

ix.	Couplant distribution unit including filtration	To be furnished by the Tenderer
x.	Payload and Supplementary payload	To be furnished by the Tenderer
xi.	Number of axes	To be furnished by the Tenderer
xii.	Sound Level	To be furnished by the Tenderer
xiii.	Weight of complete Ultrasonic Testing unit	To be furnished by the Tenderer
xiv.	Dimension of complete Ultrasonic Testing unit	To be furnished by the Tenderer

© 2022 MECON LIMITED. All rights reserved

10.02 Material Handling Facilities

10.02.01 The Bidder shall submit all the information required in the form of data/drawings based on which the material handling facilities detailed engineering shall be done by the Purchaser's consultant.

10.02.02 For preparation of technical specification for handling & Hoisting facilities required for the proposed project, Purchaser's consultant shall require the following information to be furnished by bidder:

1. For Crane/Hoists- Location, Type, Quantity, Capacity, Span, Duty Class, Speed, Rail level, Height of Lift, Hook Approach, End Approach, Length of travel, Type of control, Type of hook, Attachment details, Power supply arrangement type, Ambient temperature, Other special features if any, Constraints if any.
2. Transfer Car- Location, Quantity, Capacity, Duty Class, Speed, Length of travel, Type of control, Power supply arrangement type, Ambient temperature, Other special features if any.
3. Fork Lift Truck- Quantity, Type, capacity, Other special features if any.
4. Furnace tending Vehicle-Used for removing dross from the furnace as well as for charging of scrap. Quantity, Type, capacity, Other special features if any.

© 2022 MECON LIMITED. All rights reserved

10.03 Refractories and Insulation

10.03.01 General

In order to meet the service conditions prevailing in different zones of various Furnaces, it is necessary that the quality of Refractories and Insulations provided for the furnace shall conform, in general to the refractory lining pattern and physico-chemical properties specified below. However, the bidder shall fully satisfy themselves regarding the quality specified herein and duty conditions expected and shall have an option to quote for alternative qualities of Refractories and Insulations other than described below for different parts of the furnaces by giving full justification for such deviation.

10.03.02 Scope of work

Bidder shall confirm that they shall provide design, engineering, supply, inspection, testing, erection, supervision and commissioning services for the refractory lining of Melting and Holding Furnaces and other required areas i.e. launders etc.

Bidder shall include, in his supply, additional quantities above the actual calculated refractory lining material, to cover breakage, wastage, etc.

10.03.03 Equipment wise refractory details:

A. Melting and holding furnace:

Design temperature

The refractory lining of the furnace shall be designed for a maximum working temperature of 1200°C in view of maximum furnace roof temperature of 1050°C.

Skin temperature

The selection of quality and thickness of Refractories and Insulations shall be made in such a way that the skin temperature of side wall upto metal level, hearth & ramp/bottom shall not exceed

© 2022 MECON LIMITED. All rights reserved

110°C & the skin temperature of roof, door shall not exceed 100°C and skin temperature of side wall above metal level shall not exceed 85°C considering maximum ambient temperature of 45°C.

Indicative refractory lining pattern

Bidder shall propose various types of Refractories and Insulations for different zones / equipment of furnace considering the maximum working temperature & skin temperature as envisaged above. Lining pattern shall include the following:

Zone	Tentative refractory materials	Thickness (mm)
Hearth & Ramp/ Bottom including Side Wall upto slightly above metal level	• 85% Al_2O_3 Phosphate Bonded Bricks • 45% Al_2O_3 Dense High Strength Castable • 40% Alumina Insulating castable/High Strength Ceramic Fibre Board (1260°C)	Thickness shall be decided considering the maximum skin temperature as 110°C
Side Wall slightly above metal level	• 45% Alumina Bricks • 30% Alumina Light Wt. Bricks • Mica Insulating bricks (800°C) • 1000°C Calcium Silicate Blocks • 45% Alumina Anchor Bricks fitted with AISI-310 Metallic Anchor	Thickness shall be decided considering the maximum skin temperature as 85°C
Roof	• 60% Alumina Low Cement Castable • 40% Alumina Insulating castable • 1260°C Ceramic Fibre Blankets/1000°C Calcium Silicate Blocks • 60% Alumina Ceramic Anchor bricks fitted With AISI-310 Anchor	Thickness shall be decided considering the maximum skin temperature as 100°C

© 2022 MECON LIMITED. All rights reserved

Zone	Tentative refractory materials	Thickness (mm)
Burner Area	• 80% Alumina Low cement in-situ Castable/ PCPF blocks/ 80% Alumina Plastic Ramming Mass • AISI-310 Metallic Anchor	Equal to Side wall thickness
Doors	• High Alumina (min 45% Alumina) Low Cement Castable • 40% Alumina Insulating castable • 1260°C Ceramic Fibre Board • AISI-310 Stud Type Metallic Anchor	Thickness shall be decided considering the maximum skin temperature as 100°C
Flue Off-takes	• 40% Alumina Insulating Castable / IS: 6 (Type-2) Bricks • 1000°C Calcium Silicate Blocks • AISI-304 Stud Type Metallic Anchor	125 75
Flue ducts (Bottom & wall)	• 40% Alumina Insulating Castable with suitable anchors/ IS: 6 (Type-2) Bricks • Mica Insulating bricks (800^{0}C) • Red Bricks	115 115 75+75
Flue ducts (Roof)	• 40% Alumina Insulating Castable with suitable anchors/ IS: 6 (Type-2) Bricks • Mica Insulating bricks (800^{0}C)	230 115
Damper	• 40% Alumina Insulating Castable • AISI-304 Metallic Anchor	100

© 2022 MECON LIMITED. All rights reserved

Zone	Tentative refractory materials	Thickness (mm)
Stack	• IS: 6 (Type-2) Bricks • 1000°C Calcium Silicate Blocks	115 (230 mm in inclined portion) 25
Discharge launder	• 60% alumina Pre-cast & pre-fired blocks/Castable • 1000°C Calcium Silicate Blocks	50 25
Liquid metal Charging Trough	• 60% alumina Pre-cast & pre-fired blocks/Castable • 1000°C Calcium Silicate Blocks	50 25

Expansion joints shall be provided as per requirement and ceramic fibre shall be filled in the expansion gaps of 1260°C grade.

Bidder shall have an option to quote for alternative qualities of Refractories and Insulations other than described above for different parts of the furnaces by giving full justification for such deviation maintaining the skin temperature/lining thickness mentioned above.

Technical Specification of Refractories

Bidder shall furnish the detailed physico-chemical properties (with limit values max./min./range as applicable) of all types of refractories, insulations & auxiliaries for approval of CLIENT/MECON during engineering.

Dimensional Tolerance and Physical Defects of Refractory Bricks

Permissible deviations from specified brick dimensions for all bricks are given below:

Sl. No.	Properties	Unit	Tolerance
1.	Length	%	± 1.0
2.	Width	mm	± 1.5
3.	Thickness	mm	± 1.0

© 2022 MECON LIMITED. All rights reserved

Sl. No.	Properties	Unit	Tolerance
4.	Taper (expressed as the difference between the largest and smallest dimensions) shall not exceed	mm	± 1.0
5.	Warpage (expressed as the largest straight deviation from a straight line across the diagonal of a brick face) shall not exceed	mm	± 1.0
6.	Edge breakage shall not exceed (Refer FIG.1)	mm	25 (e+f+g) & 10 (e/f/g)
7.	Corner breakage shall not exceed (Refer FIG.2)	mm	25 (a+b+c) & 10 (a/b/c)

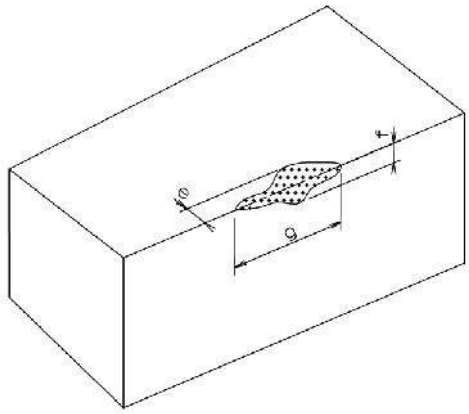

FIGURE 1

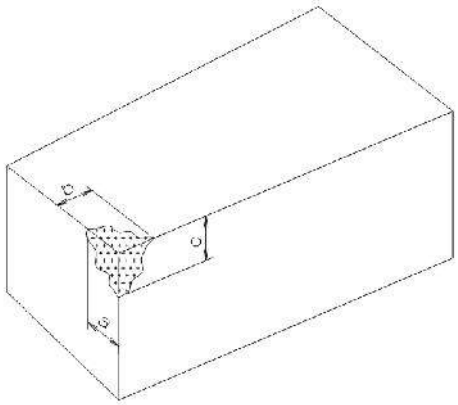

FIGURE 2

Visual Inspection Characteristics of Refractory Bricks

- **General:** The refractories shall be compact, of homogeneous texture and shall be reasonably free of cracks, voids and other flaws. They shall be burnt evenly and have sufficient mechanical strength with no soft corners. They shall show no sign of local vitrification.

- **Laminations**: Bricks must be free of internal laminations and cracks. The hammer test is used to indicate the possible occurrence of such laminations and cracks. On a cut surface of a

© 2022 MECON LIMITED. All rights reserved

representative brick, laminations, if present, must be clearly visible to indicate a defect. A crack on a cut surface will be judged according to open crack, defined below. For the hammer test, a 100 gram hammer with a wooden handle is to be used.

- **Texture**: The bricks must be free of grain segregation at corners and edges and shall have external evidence of a strong, well bonded and uniform texture, developed in a proper firing process. There must be no signs of local vitrification.

- **Craters**: Craters are defined as melt phenomena, caused by iron oxide or lime. Iron oxide stains will be tested with a hammer to determine the possible presence of craters. A crater is defined as a defect with a width larger than 6 mm and deeper than 3 mm. More than two such craters on any face are not acceptable. For the entire brick, the maximum allowable number of such craters is seven.

- **Open Cracks**: Bricks must be free of open cracks. Open cracks are defined as cracks or tears in the surface of which the length is more than 10 mm and the width is more than 0.2 mm.

- **Colour**: Colour shades due to variation of the firing process or the combination of various materials in the kiln is a common phenomenon. The inspector will verify that the bricks are of equal quality. In case of doubt a sample will be subject to chemical and physical testing by CLIENT/MECON. Iron oxide spots on andalusite are not considered as defects.

- **Fins**: Fins at corners and edges are not allowed. Fins are defined as :
  - Over 1.0 mm high and hard, which will not break under finger pressure or
  - Over 0.6 mm high and soft, which will break under finger pressure

- Surface defects such as patching of surfaces are not allowed.

© 2022 MECON LIMITED. All rights reserved

Sampling, Marking & Inspection Plan

- The manufacturer shall offer the refractory material for inspection of CLIENT/MECON only after internal testing, sorting and marking. All refractory materials shall be clearly marked with Manufacturer's Name/Brand Mark, Quality and Mark No. Marking of Dense quality bricks shall be done on the individual bricks. Marking of Insulation Bricks shall be done on the individual carton. Marking of Monolithic items shall be done on the individual bags. Additionally manufacturing date & expiry date / shelf life shall be indicated on the individual bags of monolithic items.

- For sampling the brick and for judging the conformity for acceptance of the product to the approved specification, the procedure given in IS: 1528 (Part-7) shall be followed.

- For Visual inspection, different shapes shall be considered as different lots. Every lot will be checked as per IS: 1528 (Part 7). If the lot size is less than 300 nos the following criterion shall be applicable:

Lot Size (Nos.)	No. of Samples	Permissible no. of Physical Defects	Permissible no. of Dimensional Defects
Less than 200	10% or 10 Pieces whichever is more	3	1
200-299	10% or 10 Pieces whichever is more	4	1

- All the brick lots, which have passed the laboratory tests as well as visual cum dimensional inspection as per IS: 1528 (Part-7) shall be stamped by CLIENT/MECON. The manufacturer shall despatch only accepted & stamped bricks as per inspection certificate issued by CLIENT/MECON.

- For sampling of the castable, the procedure given in IS: 10570 shall be followed.

© 2022 MECON LIMITED. All rights reserved

- For sampling of the air setting mortar, the procedure given in IS: 11452 shall be followed.

- For sampling of the ramming mass, the procedure given in IS: 10047 shall be followed.

B. Interconnecting launder system

Interconnecting launder system will include launders connecting the melting to holding furnaces and launders connecting holding furnaces to the vertical DC caster. The refractory lining will be cast shape inert to molten aluminium and its alloys with non-wetting agents. Refractory lining Material and thickness are to be furnished by tenderer mentioning the skin temperature (to be confirmed by the technologist) of launder considering an ambient temperature of 45°C.

C. Metal Degasser System

The refractory to be used for the inline degasser system should be inert to gases like nitrogen, argon, hydrogen and any other gas evolving during functioning of the degasser. The refractory material should be able to withstand the speed of rotors and rate of metal flow through the degassers. The refractory lining will be cast shape inert to molten aluminium and its alloys. Refractory lining Material and thickness are to be furnished by tenderer mentioning the skin temperature (to be confirmed by the technologist) of launder considering an ambient temperature of 45°C.

D. Metal Filtration Unit

The suitable refractory should be considered for the metal filtration unit. Refractory lining Material and thickness are be furnished by tenderer mentioning the skin temperature (to be confirmed by the technologist) of launder considering an ambient temperature of 45°C.

© 2022 MECON LIMITED. All rights reserved

E. Distribution Trough

Distribution trough is the last process equipment of the VDC casting machine from which liquid metal inserted into the mold and solidification shall start. The suitable refractory lining should be considered in such a way so that no erosion of lining shall be occurred and to avoid the chances of foreign particles entering into the casting process may cause the quality issues in the cast slab. Refractory lining Material and thickness are to be furnished by tenderer mentioning the skin temperature (to be confirmed by the technologist) of launder considering an ambient temperature of 45°C.

10.03.04 Suppliers of Refractories

Before placement of order for different qualities of Refractories, Insulations & Auxiliaries on their sub-suppliers, the successful Bidder shall take prior approval of CLIENT / MECON. The Refractories, Insulation & Auxiliaries shall be supplied only from the proven manufacturers having credentials regarding the supply of similar materials with Aluminium furnace application.

10.03.05 Information to be submitted by the bidder along with the offer regarding refractories :

i. GA of refractory lining drawing indicating thickness & quality of different qualities of Refractories and Insulations.
ii. Expected refractory lining life.
iii. Estimated tonnage of Refractories and Insulations qualitywise for different parts of the furnace & its auxiliaries.

10.03.06 Data / Drawing / Document to be furnished by successful bidder regarding refractories :

For Approval

- General Arrangement and cross-sectional refractory lining drawings including enlarged view of all complicated parts/portions indicating thickness, qualities, place of

© 2022 MECON LIMITED. All rights reserved

use/location of each brick shapes, expansion joints, mortar joints, laying pattern of brickwork, etc.

- Thermal calculations justifying the thickness and qualities of Refractories and Insulations provided in different layers for various parts of the furnace and its auxiliaries considering the ambient temperature at 45°C.
- Detailed physico-chemical properties (with limit values max./min./range, as applicable) of all refractories & insulations including mortars, masses, castable etc. and auxiliaries

For Information

- Refractory lining erection drawings including shaped brick drawings & bill of materials indicating shape & size of the bricks, unit weight of the bricks, total weight, place of use, actual quantities required, ordered quantities etc. of all refractories & insulations including mortars, masses, castable etc.
- Refractories erection manual containing refractory lining procedure, mixing formula & mixing procedure for castable, mortars, etc. as well as preheating / heating procedures & curves etc.
- As built refractory lining erection drawings.
- All relevant drawings / documents / data not specifically mentioned above but deemed essential for successful completion of refractory lining work within battery limit shall also be furnished by the Bidder.

© 2022 MECON LIMITED. All rights reserved

10.04 Utilities (Gas Facilities)

10.04.01 General

The gas facilities shall cover the utility system for melting and casting package. The utility system covered herein includes distribution system for Argon, Nitrogen, Propane gas, LPG and compressed air. All the above utilities shall be supplied by the Purchaser at the battery limit and with specified parameters as indicated below:-

Sl.no	Fuels/gases	Approx. Pressure (Bar), Flow (Nm3/hr) & Temperature (degC)
1	Propane	Tenderer to be mentioned
2	Argon	Tenderer to be mentioned
3	Nitrogen	Tenderer to be mentioned
5.	Compressed air	Tenderer to be mentioned

Any change in parameters beyond the battery limit in order to meet the requirement of individual consumers of the package shall be under the scope of the Tenderer. Further piping downstream of take over point for all utility systems complete with equipment, metering devices, controls and instruments and isolation valves, supports etc. shall be in the scope of the Tenderer.

All the above mentioned utility services shall be made available by the Purchaser through pipelines header running along the building column in one axis (to be decided with successful bidder during detail engineering) of the melting & casting complex at an approx. elevation of 7m above ground. Taping from the headers at suitable locations (to be decided with successful bidder) will be provided at 2 meter height with isolation valves at the battery limit by the Purchaser.

10.04.02 Scope of work

1. The scope of work of the Tenderer under this specification covers, design, engineering, manufacture / procurement / assembly /

© 2022 MECON LIMITED. All rights reserved

inspection / testing / shop painting, supply, transportation, delivery, storage at site, erection, testing and commissioning of all the utilities services mentioned above beyond TOP.

2. The supply shall include pipes, valves, supports, fittings, instruments, paint material, hoses and hose boxes (if required, for compressed air, Argon, Propane, Nitrogen & oxygen).

3. All the pipe work shall include, but not limited to, the following:

   - All pipe work for the services from the Battery Limit up to the various consuming points.
   - Flow measuring, recording and controlling facilities for the services, as required.
   - Pressure indicators and temperature indicators for the services, as required.
   - Control / PR valves and boosters as required.

Any item, not mentioned above but, required for smooth running of the system will be included by the Tenderer in their scope.

4. Supply, fabrication, erection, testing, painting and commissioning of the pipeline as mentioned above shall be carried out as per relevant chapters of GTS.

5. The Tenderer shall furnish following drawing / document for information / approval.

   a. Schematic layout drawing of all the fuels and gas pipelines inside battery limit of melting and casting complex.

   b. GA and cross section drawing with binding dimension showing pipe diameter, location of valves & fittings, supporting arrangement, approach platforms, elevation and consumer points for various services.

   c. Data sheets, catalogues for valves, equipment and fittings, etc.

   d. Specification of all pipes, valves, equipments, fittings, etc.

   e. OD x thickness of each pipe at design limit of IPPL.

© 2022 MECON LIMITED. All rights reserved

10.05 Air Conditioning & Ventilation System

The package #1 bidder has to provide all basic engineering data required for designing the Air Conditioning & Ventilation System and suggest the schemes usually adopted for such plant to get the products of aimed quality. If any specific feature is to be adopted/in-built in latest process line equipment & electrical panels/ cabinets, same shall be considered by the bidder indicating the advantages of using such special feature in the offered equipment in context to air conditioning & ventilation.

All electrical cabinets, drives generating major heat load should have air discharge from top of cabinet via duct/canopy.

© 2022 MECON LIMITED. All rights reserved

10.06 Water Supply Facilities

10.06.01 Scope of work

The scope of work shall include design, engineering, fabrication, manufacturing, assembly & supply, erection/construction/laying, commissioning, testing & performance guarantee tests of plant & equipment and piping etc of complete water supply facilities under this package #1 including structural supports for piping work, valves, fittings, pipe clamps, strainers, filters, heat exchangers/ chillers,, required electrics, instrumentation, automation, etc as specified and required for complete water systems for the plant as specified in this chapter as well as various chapters of this Tender Document in line with General Technical Specification (GTS) and subject to Purchaser's approval, complete in all respect on turnkey basis.

The scope of work shall include the following activities:

i) Design, engineering, manufacture /fabrication, assembly, shop testing, painting, packing sequential delivery FOR site, unloading, unpacking, storage at site, preparation & submission of all drawings for structural support, piping, construction & erection drawings, construction & erection as per approved drawings, site-testing, painting, commissioning and fulfillment of guarantee performance of all plant & equipment of water supply facilities under scope of package#1 facility.

ii) Supply of pipeline supports, thrust blocks/ anchor blocks, structural stockades, bridges, R.C.C. pedestals etc. for overhead / on-ground /underground pipelines, as required.

iii) Supply of all technical literature, drawings & documents, general arrangement drawings, assembly & sub-assembly drawings of all the plant & equipment, construction & erection drawings, as-built drawings, operation & maintenance manuals, manufacturing drawings / detail ordering specification, etc.

iv) Submission of all drawings at (iii) above, design calculations, data sheets for various equipments, pipeline sizing calculation and

© 2022 MECON LIMITED. All rights reserved

calculation for sizing of various sub-systems and integrated systems for approval of Purchaser/ Consultant and finalizing the same as per approval of Purchaser/ Consultant. The approval of the same however does not absolve the Tenderer from his responsibilities.

v) Supply of commissioning spares & consumables; a list thereof shall be submitted by the Tenderer.

vi) Tenderer shall submit an itemized price-list of two years operation and maintenance spares.

vii) Supply of special tools & tackles for construction, erection operation and repair & maintenance of the plant & equipment.

viii) All necessary connections for hook-up with Purchaser's system at battery limits. Purchaser will provide Water pipe header through the building column along one axis of the shop /bay at a height (to be decided during detail design). Pressure and quality of water in header will be as defined in relevant chapter. As per pipe size requirement and location defined by successful tenderer, taping will be provided from the water pipe line header at a height of 1.2 meter with one isolation valve. Tender to provide all basic data pertaining to water requirement of Package#1 facility to enablethe purchaser to design the water header pipe lines and water systems design. TOP of tenderer will start from this point. Further piping work till its consumers points or discharge points, facility for increase or decrease of water pressure, flow control, temperature control, any other process instruments& control, pumps, valves, electrics & automation required for proper functioning of the supplied equipment& system will be in the scope of Package#1 tenderer.

ix) Supply of erection, testing & commissioning equipment and material.

x) Piping network flushing fluids, chemicals & consumables.

xi) First fill of oils, lubricants, filter media, resins, chemicals reagents and other consumables within the battery limit of tenderer.

xii) Inspection and performance testing of individual equipment and system as a whole.

© 2022 MECON LIMITED. All rights reserved

xiii) Participation in design conference with the Purchaser & Consultant as and when called for.

Water supply system/ sub-systems shall be complete in all respects and any equipment or material not specifically mentioned in this specification, but required for safe, efficient & smooth operation and guaranteed performance of the plant shall be deemed to be included under the scope of work of the Tenderer.

10.06.02 Battery Limit

a) **Recirculation, Emergency water (contact & non-contact water)**
Cold recirculation water line (supply) from the industrial water circuit will be provided by the Purchaser through pipe line header running (at a height to be mutually decided later) along the building columns of the shop / bay of the proposed plant at requisite flow, pressure, temperature & quality (to be decided by the tenderer).
Hot recirculation water line (return) will be left by the Tenderer upto header running (at a height to be mutually decided later) along the building columns of the shop / bay of the proposed plant at requisite flow, pressure (minimum 2.5 kg/cm2), temperature & quality (to be decided by the tenderer).

b) Industrial water

Industrial make-up water quality with due treatment of raw water (raw water quality as indicated in GTS)will be made available by the Purchaserto the Tendererthrough pipe line header running (at a height to be mutually decided later)along the building columns of the shop / bay of the proposed plant at a pressure of approx 1.5-2.0kgf/ cm2 (g). Suitable pipe tapping from the header along with one isolation valve will be provided as per specified locations &pipe sizes of tenderer at 1.2 meter height.Tenderer shall extend the same through isolation gate valves in valve-pit alongwith flow meter (complete with isolation valves and by-pass arrangement) to his proposed systems for service/make-up water requirement for the facility under package#1.

© 2022 MECON LIMITED. All rights reserved

Tenderer shall indicate the make-up water quantity requirement, pipe size, end connection, MOC of pipeline, etc. at the battery limit.

Water treatment facilities as required for the proposed plant and equipment shall be provided by the Tenderer.

c) Construction Water

Construction water sourced from bore well shall be made available to the Tenderer at one point within 50m from the proposed plant. Tenderer shall extend the same from battery limit through isolation gate/ball valve in valve-pit to the entire plant area for their usage.

10.06.03 Erection, Testing and Commissioning

1. The erection of all plant and equipment shall be carried out according to the latest engineering practices and according to the drawings, specifications, Instructions etc. duly approved by the Purchaser/Consultant.

2. The welding work should be carried out as per the approved WPS and PQR.

3. The Tenderer shall supply all required manpower, tools and related equipment, all hoisting equipment, all necessary scaffoldings, all necessary transporting equipment, consumables. Construction and erection materials, petrol, diesel oil, kerosene, solvents, sealing compound, tapes, brazing and soldering materials, welding and brazing gases, erection bolts, nuts and packing sheets/compounds, temporary supports, wooden blocks, spacers, templates, jute and cotton wastes, sand/emery paper etc. as required for the satisfactory completion of work.

4. After erection, all equipment having moving part, subject to pressures or voltages shall be given trial operation. The trial operation shall consist of 72 hours of continuous operation. All

© 2022 MECON LIMITED. All rights reserved

modifications and rectifications required during the trial operation or required for proper operation shall be done at his own cost by the Tenderer as accepted by the Purchaser/ Consultant.

5. Rotating equipment shall be checked for proper direction of rotation and shaft alignment. Equipment subject to pressures shall be carefully examined for leakage. All equipment, such as pressure taps, temperature measurement connections, flow measurement devices etc. shall be provided by the Tenderer.

6. On completion of the work, the Tenderer shall remove and dispose off all rubbish and other unsightly materials caused by his working to a location as directed by the Purchaser and thereby leaving the premises in good, clean, safe and operable condition.

7. Before giving call for final inspection, all the documents shall be furnished to the Purchaser. The record of manufacturing details, inspection and tests carried out by the Tenderer shall be made available to the final inspecting authority. However, approval and final inspection at the manufacturing works shall not relieve the Tenderer of responsibility of replacing at his cost any defective part/material which may be detected by the purchaser during erection and commissioning or guarantee period.

8. All materials required for fabrication, construction, testing and inspection shall be supplied by the Tenderer. No material shall be free issue to the Tenderer.

9. No equipment or part item shall be dispatched without final inspection and issuance of inspection certificate.

10. All equipment, assemblies, sub-assemblies shall be shop tested as per relevant standards and the test certificates shall be submitted by the supplier.

© 2022 MECON LIMITED. All rights reserved

11. Erection, testing & commissioning of various equipments and piping etc shall be done also inline with details given in various chapters of GTS.

10.06.04 Painting

The Tenderer shall follow the painting procedure as mentioned in GTS.

10.06.05 Preferred Makes

The Tenderer shall follow the list of preferred makes as per GS-13.

10.06.06 Drawings & documents

Drawings / documents to be furnished by the Tenderer for approval

1. Process flow diagram indicating the water consumption figures complete with temperature, pressure and quality requirements.
2. P&IDs of each circuit of the complete water supply system showing all the consumers, flow rate, pipe diameters, broad parameters of each equipment, instruments, alarms & interlocks functions using ISA symbols, water losses etc.
3. Write -up detailing the control logic for the entire water system.
4. List of instruments comprising bill of materials and instrumentation data sheets.
5. List of safety interlocks.
6. Pipeline materials and specifications considered for various systems.
7. Equipment and piping sizing calculations.
8. Layout drawing showing the battery limits of make–up water, drinking water, firefighting water and the pipeline route to various consumers including requirement of make-up water,

© 2022 MECON LIMITED. All rights reserved

drinking water, firefighting water and construction water at battery limits.

9. General arrangement and cross-sectional drawings, characteristics curves and technical details of all the equipments (pumps, strainers, cooling tower & its components, valves, expansion joints, conditioning chemicals, sluice gates, fire hydrants, etc.).

10. GA drawings showing plan, elevation and sectional views of the water system units and installations.

11. Layout drawing of piping system indicating pipe routing, location of supports, valves and other fittings as required.

12. Quality Assurance Plan.

13. Any other drawing/ documents as required by the Purchaser / Consultant.

Drawings / documents to be furnished by the Tenderer for reference and record

1. The Tenderer shall submit required sets of all the approved drawings, documents and manuals for Purchaser's/ Consultant's record and use. After erection of equipment, the Tenderer shall submit one set of linen tracings/ reproducible in required number of prints along with soft copies in CD (in AutoCAD format) of each "As built drawings".

2. Operation and maintenance manual.

3. Spare parts recommendation and price list.

4. Bill of Quantities covering all equipments, valves, strainers, pipelines, etc.

5. Test certificates for the following:
   - Material test certificate for all major equipment and their components.
   - Hydraulic test of equipment, pipe fittings & valves.

© 2022 MECON LIMITED. All rights reserved

- Static and dynamic balancing of all rotary parts/ equipments.

6. List of special tools and tackles if any.
7. List of commissioning spares.
8. List of spares for two years of normal operation and maintenance with item wise prices.
9. Instruction for erection, testing and commissioning.
10. Test procedures for preliminary and final acceptance tests.
11. Manufacturer's test certificates.
12. Lubrication schedule and quantity and quality of lubricant for one year's normal operation.
13. Various equipment assembly drawings and bill of material.
14. Welding procedure.
15. Hydraulic test logs.
16. Equipment GA drawings and bill of materials.
17. Characteristics curves of the pumps, motors and other equipments.
18. Operation and maintenance manuals for all equipments, valves and complete water system along with soft copies.
19. Test and calibration certificates.
20. Warranty/ guarantee certificates.
21. Catalogues, literatures of all equipment.
22. Technical literature, catalogues and manufacturer's drawings for all brought out equipment, valves and other items.
23. All inspection/ test report/ certificates.
24. Any other drawing / documents as required by the Purchaser/Consultant.

© 2022 MECON LIMITED. All rights reserved

10.07 Electrics, Automation and Telecommunication

INDEX – ELECTRICS AND AUTOMATION

SL	Clause	Description	Page no.
1	10.07.01	**SCOPE**	3-7
2	10.07.02	**General Technical Condition**	7-14
3	10.07.02.01	Climatic Condition	7-8
4	10.07.02.02	Main Incoming Power Data	8
5	10.07.02.03	Auxiliary Voltage	8-9
6	10.07.02.04	Codes & Standard	9-10
7	10.07.02.05	Take Over Point (Battery Limit)	10
8	10.07.02.06	Preferred Makes of Equipments	10-11
9	10.07.02.07	Design Criteria	11-14
10	10.07.03	Power Supply	14-15
11	10.07.04	**Drive System**	15-34
12	10.07.04.01	Converter Transformer	15-19
13	10.07.04.02	Distribution Transformer	20-24
14	10.07.04.03	Driver Converter System	24-27
15	10.07.04.04	Drive Motors	28-29
16	10.07.04.05	LV Fixed Speed AC Motors	30-31
17	10.07.04.06	MCC, PDB & Other Cubicles	31-34
18	10.07.05	**Automation System** - General	34-52
19	10.07.05.01	Basic Automation and PLC System (L-1)	37-40
20	10.07.05.02	Process Automation System (L-2)	40-45
21	10.07.05.03	HMI System	45-48
22	10.07.05.04	Measurement System & Instruments	48
23	10.07.05.05	Control / Operator Desk	48-50
24	10.07.05.06	Structural Pulpits	50-51
25	10.07.05.07	Automation related other misc.	51-52

© 2022 MECON LIMITED. All rights reserved

		equipment	
26	10.07.06	**Additional Systems**	52-56
27	10.07.06.01	Uninterrupted Power Supply System	52-54
28	10.07.06.02	Primary and Secondary Earthing System	54-55
29	10.07.06.03	Lightning Protection System	55
30	10.07.06.04	Welding & Small Power Supply Socket System	55
31	10.07.06.05	Illumination System	55-56
32	10.07.07	**Cable and Erection Material**	56-60
33	10.07.08	**Special Tools & Tackles**	61-62
34	10.07.09	**Water Treatment Plant**	62
35	10.07.10	**Air Conditioning & Ventilation System**	62
36	10.07.11	**Compress Air System**	62
37	10.07.12	**Laboratory System**	62
38	10.07.13	**Drawing & Documentation**	62-63
39	10.07.14	**Services**	63-64
40	10.07.14.01	Inspection	63
41	10.07.14.02	Training	63
42	10.07.14.03	Erection	63-64
43	10.07.14.04	Testing & Commissioning	64
44	10.07.14.05	Spares	64
45	10.07.15	**Commissioning Spares**	65-68
46	10.07.16	**The List drgs./documents submission with offer**	68
47	10.07.17	**Scope Division/Split-up List**	68-76

© 2022 MECON LIMITED. All rights reserved

10.07.01 Scope

Scope of Work

The scope of work of the Bidder shall necessarily include (but not limited to) the following: Design, Basic and Detail engineering, manufacture, assembly, factory testing, inspection, packing, forwarding, delivery at site, unloading, storage at site, erection, testing, commissioning and handing over to the Employer of electrical equipment complete with cables, erection and earthing materials, supervision of Erection, Testing and Commissioning conforming to the requirements given in this Technical Specification.

All necessary power distribution from the outgoing terminal of Employer's MV switchboard (11 kV) to supply power to the Furnaces & Casters electrics and auxiliary system electrics being supplied by the Bidder shall be in Bidder's scope.

Distribution transformers, associated, HT Cables, PCC(LCSS) and further distribution of LV power necessary for auxiliaries of the technological equipments shall be under scope of bidder. 11KV HT Breaker with protection for incoming supply of this distribution transformer shall be provided by employer.

Necessary emergency power requirement for the Furnaces & casters system shall be specified by Bidder (giving break up of the emergency loads considered including operating / working loads). Employer shall provide one no. 415V, 3ph, 50Hz, emergency power supply feeder from their DG / emergency sources for Bidder's use. The KVA rating for the same shall be indicated in their offer by bidder.

Scope of Supplies

1. Power and control cables, cable termination kits, laying and termination of all associated power and control cables from the Employer's 11kV switchboard located Furnace cum Cater ECR of this plant.
2. VCB with protection features controlled by drive function at

© 2022 MECON LIMITED. All rights reserved

/before converter transformer primary side with earthing switches as per requirement.

3. VCB without protection features at /before bidder's distribution transformer primary side with earthing switches.
4. Converter Transformers.
5. Distribution Transformer for equipment Auxiliaries and associated systems for LV Power distribution.
6. Drive Converter System.
7. AC motors as per process requirements.
8. LCSS for Equipments Auxiliary Power supply , Motor Control Centers (MCC), other Cubicles.
9. Power supply distribution up to LCSS for cranes, Hoist, Transfer cars, Illumination system, Air condition and ventilation systems and other associated auxiliary systems of shop floor shall in scope of Employer. However Bidder shall keep space provision in each ECR of further distribution Panels/Cabins of the above systems.
10. Complete Automation System for the furnaces and casters including Measuring Instruments, Sensor, Basic Automation System (Level-1) with remote I/O panels, Process Automation System (Level-2) for Furnaces and casters as per process requirement.
11. Provide interface both in Level-1 and Level-2, between Automation Systems at Preheat Furnace, WTP, Power Distribution System, laboratory, Employer's Level-3 Automation System for Production data and Management Information exchange and any other Automation systems in the Furnaces cum casters.
12. HMI System.
13. Process Data Acquisition System.
14. Measuring Gauges, Instruments, Sensors & Encoders, Mounted Electrics / Field Devices.
15. Control Desks, Local Control Boxes/Local Control Cabinets, junction boxes (onboard & plant floor).

© 2022 MECON LIMITED. All rights reserved

16. Consumption monitoring for Power and media supply including supply of instruments for acquiring consumption data at respective TOPs.
17. Control / Operator Desks as per process requirement.
18. UPS system including its AC Distribution Board (ACDB).
19. MV, LV Power Cables, Control Cables, Communication Cable, Screened/ Special Cables as per requirement.
20. Basic data and basic engineering of IP Based CCTV system
21. Basic data and basic engineering of Fire Detection & Alarm System for furnaces, casters & other areas as specified.
22. Basic data and basic engineering of IP Based Voice communication system for Furnaces cum Casters.
23. Search & Signaling system including rotating flash lights and sirens at strategic locations e.g. top of pulpit etc. Any special lighting for equipments/system, the same shall be considered by bidder.
24. Plant production data digital display units at strategic locations with automation interface.
25. Primary & secondary earthing including Electronic earthingsystem for automation equipment / PLC/ Drives/ Electronic Equipment supplied, neutralearthing of transformers, and earthing of all power distribution equipment.
26. Media supply (cooling water, compressed air etc) from TOP up to respective equipment flanges.
27. Electrics & Control for Sump Pumps.
28. Cable supporting structures in the cable tunnel, cable channel or overhead cable bridge for interplant cabling, erection accessories, earthing materials & consumables as shall be necessary for Bidder's & employer's cables.
29. GI pipes for protection of cables at road crossing and other places where cables may be subjected to mechanical stress and damage.
30. First fill of all consumables including first fill of transformer

© 2022 MECON LIMITED. All rights reserved

oil with extra 20% oil, consumables, repair of any damaged equipment and touch up painting during handling and erection of equipment.

31. One LV CB handling trolley for each LV switchboard as per requirement.
32. Supply of Special tools & tackles.
33. Supply of Commissioning Spares.
34. Electrics & Control for the plant Media Systems and any technological item covered under this specification.
35. Bidder shall plan for all the automation systems up to Level 2 and price bid shall be provided for the same as indicated in price bid format, which shall be considered for evaluation of L-1 Bidder.
36. **Bidder shall submit separately all automation hardware and software with compliance INDUSTRY 4,O as a optional items. Complete details of L- 0, L- 1 & L- 2 hardware and software shall be included in their offer and price for the same shall be indicated by the bidder in price bid format. This price shall be optional and shall not be used for evaluation of L-1 bidder**

Scope of Construction Power Supply

1. Employer shall provide power at LV (415V) AC, one number feeder at a suitable location within the battery limits. The required rating of the feeder shall be mentioned in their offer.
2. Distribution of Construction Power Supply from the Bidder's Distribution Board to the respective consumers.
3. Bidder's scope shall also include stand-by DG power supply arrangement for construction work.
4. Laying termination of cables from Employers feeder to the distribution board of Bidders.

Scope of Services

1. Complete Design, Basic & Detailed Engineering, Software

© 2022 MECON LIMITED. All rights reserved

Development & Testing, Erection and Commissioning of the equipment supplied.

2. Measurement of soil resistivity for designing Earthing System and Lightning Protection System as applicable.
3. Training of Employer's personnel for Operation/ Maintenance.
4. Association of Employer/his Consultant in system engineering software development and testing of equipment.
5. Drawing & documents as per mutual agreement during Kick off meeting with successful Bidder.

10.07.02 General Technical Condition

10.07.02.01 Climatic Condition

Ambient temperatures for design of electrical equipment shall be	
For Furnaces and Casters Floor equipment (in hot area)	55 deg C
For other normal Floor equipment (in cold area), Pressurized Ventilated Rooms (HT/ LT Rooms, MCC Rooms, Cable basement, Cable tunnel), Transformer room (both for dry & oil type)	50 deg C
For Air Conditioned Rooms (Automation rooms and Pulpits)	25 deg C (equipment design for 47^{0}C internal temperature)
For Air Conditioned Rooms (Drives)	35 deg C (equipment design for 47^{0}C internal temperature)
Humidity	100% (not occurring simultaneously with max. temp.)
Cooling water inlet temperature	35 Deg C
Cooling water temperature rise	7^{0}C

© 2022 MECON LIMITED. All rights reserved

Altitude Above MSL	< 1000 M

10.07.02.02 Main Incoming Power Data

MVAC Power Supply	
Voltage	11 KV,+10% , – 10%
Frequency	50 Hz +5%, -5%
Symmetrical short circuit	40 KA for 3 Sec
Earthing	Resistive Earthed
LVAC Power Supply	
Voltage	415 V, +10%, -15%
Frequency	50 Hz +5%, -5%
Symmetrical short circuit	as per design
Earthing	Solidly Earthed
No of 11 KV feeders to be provided by Employer	Shall be provided by Employer. Bidder shall submit nos. of 11KV feeders along with power SLD with their offer Indicating their all requirement positively.
Symmetrical Short Circuit for 415V switch gear	as per design

10.07.02.03 Auxiliary Voltage

AC control (Power supplies, Single phase AC)	240 V
Solenoid valves	24 V DC
PLC power supply	240V AC, 50 Hz, obtained through UPS (for processor)
PLC Interrogation & output	24 V DC

© 2022 MECON LIMITED. All rights reserved

Voltage	
Sockets for Welding purposes	415V, 63/100A, 3 pin plus earth with plug interlocked switch
Sockets for hand tools	240V, 15A, 2 pin plus earth with plug interlocked switch
Electro-magnetic brakes	220V, DC, obtained through individual rectifiers
Battery and battery charger	110 VDC, (employer scope)

10.07.02.04 Codes & Standard

Bidder's supplied equipment shall conform to the following documents

GTS No.: MEC/S/11/35/Q7R6/GTS/01/R0, March, 2022.

Design Standards

The electrical equipment and the automation systems shall be delivered in accordance with international norms, standards and regulations of

- IEC (International Electric Organisation)
- DIN (German Industrial Standrad)
- VDE(Specification of the Association of German Electrotechnicans)
- IS (Indian Standards)

The engineering shall be carried out in English language.

The Employer gets the right of use of the supplied software. The copyright remains with the Bidder.

The control software shall be used exclusively in this Employer's plant. The making of backups for safety reasons is explicitly allowed. It is prohibited to make software accessible to third parties.

© 2022 MECON LIMITED. All rights reserved

The source code of this application software shall be delivered in a form that Employer's maintenance personnel can carry out modifications.

10.07.02.05 Take Over Point (Battery Limit)

Power Supply

Take over point of power supply for this package shall be from the outgoing terminals of Employer's MV (11 kV) switchboards to be installed in the Furnace cum Caster ECR of the Mill.

Emergency Power Supply

For emergency power supply, employer shall provide one no feeder at LV (415V, 3 Ph, 50 Hz, AC) at the nearest established DG station/sub-station (approximately 200 mtrs) for technological equipments.

Construction Power Supply

For construction power supply, Employer shall provide one number of feeder for power at LV (415V, 3 Ph, 50 Hz, AC) at the nearest established sub-station (approximately 150 mtrs).

Cooling Water and Media supply

The mounting structures, media requirement piping including valves & filters (for air & water supply) up to the TOP (defined elsewhere in this specification), any protection enclosure against dust / heat / vibration, lead cables with necessary junction box, etc is included in the scope of the Bidder as per technology provider's motor and component list and same shall be complete with its electronics and its cabinet.

10.07.02.06 Preferred Makes of Equipment

Makes of all Electrical & Automation equipment shall be selected out of Employer's "Preferred makes of equipment and supplies" given under General Technical Specification (GTS). Only one make shall be adopted for each type of equipment considering plant standardization.

In case make of some equipment/components are not indicated in

© 2022 MECON LIMITED. All rights reserved

the list, approval of makes for the same shall be obtained from Employer.

10.07.02.07 Design Criteria

Design Philosophy & Criterion for Equipment Selection

The equipment offered shall be suitable for smooth, efficient and trouble free service in the tropical humid climate prevailing at plant site and under the ambient temperature conditions indicated for the different areas. In hot areas of higher temperature conditions, the equipment shall be adequately protected against damage from radiant heat and hot air.

Due consideration shall be given to the dust laden atmosphere. All equipment and accessories located outdoors shall be duly protected against weather.

Equipment De-Rating Criterion

Equipment selection and de-rating shall be based on ambient temperatures as have been mentioned under supply conditions.

Selection of Motors Voltage Levels

AC squirrel cage induction motors of rating up to 200 kW shall be fed at LV, 415V, 3 phase, 4 wire 50 Hz, with DOL or VFD as applicable.

DOL start LV Motors (415V) of rating 132 kW upto 200 kW shall be fed through independent Motor Control Panel (MCP) and shall be provided with one number control transformer. MCPs shall in turn be fed directly from LCSS. Power devices like MCCB, Contactor, etc for drives of rating 132 kW and above shall be located in these MCPs. Each MCP shall be located in ECR room by the side of the respective group MCC.

AC motors of rating in excess of 200 KW shall be connected to the MV power supply system.

Selection of Motor Type

© 2022 MECON LIMITED. All rights reserved

AC Synchronous and Asynchronous squirrel cage induction motors shall be used for drives requiring speed control.

Motor Starting and Permissible Voltage Dips

Voltage dip on starting of the largest LV motor shall be limited to 10% of the nominal voltage at the motor terminals. Maximum allowable voltage drop in any feeder under steady state condition shall be maintained as follows:

Total voltage drop during running	6 %
LTSB to MCC/ PDB/ MLDB	2-3 %
MCC to motor	4-5 %

In-Shop Power Supply System

Suitable numbers of 415V Motor Control Centers shall be provided for feeding power supply to motors of rating 110 kW and below. VFDs shall be provided for equipment requiring speed control.

Automation System Redundancy concepts

- Level – I system shall have no redundancy
- Level – 2 system shall have hot standby CPU, DMR (Dual modular Redundant) CPU, Hot plug Power supply unit and redundant fan unit.
- HMI system shall have hot standby server.
- Data storage shall be in RAID-5 configuration having multiple discs and with features of volume shadowing / Disc mirroring.

Automation System Spare concepts

- 20% mounted spare I/O channels left after commissioning on overall I/O count including remote I/O stations.
- 20% spare slot for PLC and remote I/O stations(Min one slot)
- Minimum 40% spare memory capacity shall be built in the

© 2022 MECON LIMITED. All rights reserved

system after loading of application and system software

- Communication Network loading shall be limited to 50% max
- 50% maximum network loading
- 50% CPU load.
- Field bus shall have a cold standby (unconnected) cable laid through different route with connectors

Automation Cable Selection Concept

- Twisted pair cables shall be used for communication between panels inside a Room and FO cable shall be used for outside premise communication.
- Network cabling shall have either ring or dual bus structure.
- Network cables shall trace separate / alternate routes and shall run through GI pipes distinctly colored and clad with heat resistant cable along with necessary identification of cable.

Communication

- Field bus connection shall be used for field instruments / RIO unit & drives etc.
- Level-1 & Level-2 network shall be through Ethernet connection.

Layout Issue for Transformer

Oil type transformers shall be located outside the bays only.

LVAC Distribution spares

Each / MCC / PDBs etc. shall be provided with 20% spare cubicles with modules. These spare cubicles & modules shall be complete with circuit elements and shall be fully wired. Rating and type of spare feeders shall be decided during detailed engineering

© 2022 MECON LIMITED. All rights reserved

stage.

Pre-wiring Concept for Bought-out Items

All bought-out systems including valve stands, power packs etc. shall be supplied in pre-wired condition with copper cable up to junction boxes for external cable termination.

10.07.03 Power Supply

Bidder's scope includes all power supply equipment within the battery limit.

Bidder's scope also includes supply and termination of MV / LV power, control, communication & signal cables at both ends for all electrical equipment within the battery limit.

Bidder shall size & supply power cables, control cables & special cables, plan the cable route, lay the cables and terminate at both ends.

Medium voltage side isolation

Medium voltage VCBs (with protection features controlled by the Drive function) as per requirement, before the converter transformers, shall be housed inside the transformer room .

Medium voltage VCBs (without protection features) as per requirement, before the distribution transformers, shall be housed inside the transformer room.

The above VCB panels shall also have Trip PBs (press to lock and turn to release) in the transformer rooms for tripping of upstream breakers.

Power supply for auxiliary systems (up to LCSS)

Power Supply Data to be Furnished by Bidder

Final details of connected load (in kW), and 15 minute maximum demand (in kVA) for each feeder / unit shall be furnished by the

© 2022 MECON LIMITED. All rights reserved

Bidder during basic engineering. Bidder shall also submit the details of aux load requirement for the technological equipmentsand other loads under scope of the bidders for necessary size of LV distribution systems by employer.

Power Factor Compensation & Harmonic Suppression Systems

Bidder's shall provide necessary basic data (BD) including space requirement for power factor compensation & harmonic suppression systems, as may be required by the Employer during engineering.

Construction Power Supply

Approximately 150 kVA construction power shall be provided at one points. Bidder's scope shall include distribution of Construction Power Supply from the Bidder's Distribution Board to the respective consumers and maintenance of the construction power supply system.

Bidder's scope shall also include DG set (on hire) for stand-by power supply arrangement for construction work.

Supply, Laying, Termination & Maintenance of cables from Employer's feeder to the Construction Power Distribution Board of Bidder during installation.

10.07.04 Drive System

10.07.04.01 Converter Transformer

Converter Transformer (Oil type)

ITEM	PROJECT SPECIFICATION
Constructional Feature	
Material	1. Low loss CRGO silicon steel for core 2. Copper for winding.
Lamination	CRGO Steel
Electrical Design	
Installation	Outdoor (outside the plant building)
Rated Primary voltage	11 kV

© 2022 MECON LIMITED. All rights reserved

ITEM	PROJECT SPECIFICATION
No. of Phases	Three
No. of Primary Windings	One
No. of secondary Windings	As per drive configuration
Frequency	50 Hz
Type of Cooling	ONAN (Mineral Oil)
Class of Insulation	Class A
Tap Changer	Off Load (At ± 2.5 % and ±5.0 %)
Termination	1. MV XLPE armored Aluminum Cable 2. LV XLPE Un armored Aluminum Cable min 95 mm sq
Insulation	Shall be designed according to the voltage specified
Nominal system voltage (KV)	12
One Minute power frequency withstand voltage (kV)	28
Peak impulse test withstand voltage (kV)	75
No load losses	Shall be furnished during basic engineering
Load losses	Shall be furnished during basic engineering
Transformer sizing calculation	Shall be furnished during basic engineering
Clearance in air (mm)	
Phase to Earth (mm)	110
Phase to Phase (mm)	127
Permissible temperature rise at rated output over the ambient temp at Hot spot	
Transformer Oil	45 ^{0} C
Winding (Resistance method)	50 ^{0} C
Fitting & Accessories	Transformers shall be provided with following: 1. First fill of oil with 10% excess in drums

© 2022 MECON LIMITED. All rights reserved

ITEM	PROJECT SPECIFICATION
	2. Neutral bushing CT with terminal arrangement 3. Conservator with oil filling hole, cap and drain valve sump, drain valve and detachable end plate. 4. Magnetic type oil gauge with low oil level alarm contacts 5. Silica gel breather with oil-seal 6. Buchholz relay with independent alarm and trip contacts 7. Required Nos. of pressure relief valves/vents with trip contacts 8. Pockets on tank cover for thermometers for WTI and OTI 9. Oil temperature Indicator with maximum pointer and two sets of contacts 10. Liquid level indicator with contact for alarm and tripping. 11. Winding temperature indicator with maximum pointer and three sets of contacts 12. Winding temperature indicator for remote indication 13. Oil filling hole with flange and bolted cover 14. Rating & diagram plate 15. Jacking pads 16. Lifting Lug 17. Air release devices 18. Inspection cover with neoprene gaskets 19. Earthing terminals (2 nos. on diagonally opposite sides) 20. Power Terminal boxes for Primary & Secondary 21. Marshalling kiosk for termination

© 2022 MECON LIMITED. All rights reserved

ITEM	PROJECT SPECIFICATION
	of control cables. 22. Flange wheel/rollers
Quality of Operation	
Performance	As per IEC- 76 / IS-2026

Converter Transformer (Dry type up to 2 MVA and 11KV)

ITEM	PROJECT SPECIFICATION
Constructional Feature	
Design	Cast resin type
Material	1. Low loss CRGO silicon steel for core 2. Copper for winding.
Lamination	CRGO Steel
Terminal Box	Cable terminal box on primary & secondary
Electrical Design	
Installation	Indoor
Rated Primary voltage	11 kV
Rated Secondary voltage	As per process requirement
No. of Phases	Three
No. of Winding	Two
Frequency	50 Hz
Type of Cooling	AN
Class of Insulation	Class F (VPI)
Temperature rise of winding	70 deg C (Winding) by resistance method
Off Load Tap Changer	At ± 2.5 % &±5.0 %
Termination	1. MV XLPE armored Aluminum Cable 2. LV XLPE unarmored Aluminum Cable
Insulation	Shall be designed according to the voltage specified
No load losses	Shall be furnished during basic engineering
Load losses	Shall be furnished during basic engineering
Vector group	As per process requirement
Transformer selection	Transformers shall be supplied as per

© 2022 MECON LIMITED. All rights reserved

ITEM	PROJECT SPECIFICATION
	the system requirement.
Transformer sizing calculation	Shall be furnished during basic engineering
Short circuit withstand time	Time duration to withstand 3 phase short circuit at secondary terminal without any injury shall be 5 Sec.
Winding temperature monitoring with alarm and trip	Embedded PT-100 for winding temperature monitoring with alarm and trip contacts shall be provided in a separate auxiliary terminal box.
The winding temperature digital display	Shall be provided mounted on the body of the transformer. Mim 6 channel type.
Fitting & Accessories	Transformers shall be provided with following: 1. Winding temperature indicator (digital display on transformer body) 2. Winding temperature indicator for remote indication 3. Rating & diagram plate 4. Jacking pads 5. Lifting Lug 6. Earthing terminals (2 nos. on diagonally opposite sides) 7. Power Terminal boxes for Primary & Secondary 8. Marshalling kiosk for termination of control cables 9. Flange wheel/rollers 10. Neutral bushing CT with terminal arrangement 11. Pockets for thermometers for WTI 12. Internal exhaust fans separate for each phases.
Quality of Operation	
Performance	As per IEC- 76 & IS-2026, with type testing for heat run , impulse and partial discharge

© 2022 MECON LIMITED. All rights reserved

10.07.04.02 Distribution Transformer (Dry Type up to 2.5 MVA and 11KV)

ITEM	PROJECT SPECIFICATION
Constructional Feature	
Design	Cast resin type
Material	1. Low loss CRGO silicon steel for core 2. Copper for winding.
Lamination	CRGO Steel
Terminal Box	Cable terminal box on primary Bus duct for secondary side
Electrical Design	
Installation	Indoor
Rated Primary voltage	11 kV
Rated Secondary voltage	0.433 KV
No. of Phases	Three
No. of Winding	Two
Frequency	50 Hz
Type of Cooling	AN
Class of Insulation	Class F (VPI)
Temperature rise of winding	70 deg C (Winding) by resistance method
Off Load Tap Changer	At ± 2.5 % &±5.0 %
Termination	1. MV XLPE armored Aluminum Cable 2. LV bus duct / LV Cable of suitable rating
Insulation	Shall be designed according to the voltage specified
Nominal power	Shall be selected from 1000 or 2500 KVA only
No load losses	Shall be furnished during basic engineering
Load losses	Shall be furnished during basic engineering
Vector group	DYN-11
Transformer selection	Transformers shall be supplied as per the system requirement considering loading of individual transformer up to

© 2022 MECON LIMITED. All rights reserved

ITEM	PROJECT SPECIFICATION
	80% (in case of failure of one transformer of LCSS).
Transformer sizing calculation	Shall be furnished during basic engineering
Neutral CT	To be decided during basic engineering
Short circuit withstand time	Time duration to withstand 3 phase short circuit at secondary terminal without any injury shall be 5 Sec.
Winding temperature monitoring with alarm and trip	Embedded PT-100 for winding temperature monitoring with alarm and trip contacts shall be provided in a separate auxiliary terminal box.
The winding temperature digital display	Shall be provided mounted on the body of the transformer.
Fitting & Accessories	Transformers shall be provided with following: 1. Winding temperature indicator (digital display on transformer body) 2. Winding temperature indicator for remote indication 3. Rating & diagram plate 4. Jacking pads 5. Lifting Lug 6. Earthing terminals (2 nos. on diagonally opposite sides) 7. Power Terminal boxes for Primary & Secondary 8. Marshalling kiosk for termination of control cables 9. Flange wheel/rollers 10. Neutral bushing CT with terminal arrangement 11. Pockets for thermometers for WTI
Quality of Operation	
Performance	As per IEC- 76 & IS-2026, with type testing Heat Run and Impulse

© 2022 MECON LIMITED. All rights reserved

Distribution Transformer (Oil Type)

ITEM	PROJECT SPECIFICATION
Constructional Feature	
Material	1. Low loss CRGO silicon steel for core 2. Copper for winding.
Lamination	CRGO Steel
Electrical Design	
Installation	Outdoor (outside the plant building)
Rated Primary voltage	11 kV
No. of Phases	Three
No. of Primary Windings	One
No. of secondary Windings	One
Frequency	50 Hz
Type of Cooling	ONAN (Mineral Oil)
Class of Insulation	Class A
Tap Changer	Off Load (At ± 2.5 % and ±5.0 %)
Termination	1. MV XLPE armored Aluminum Cable 2.Bus Duct/ LV XLPE Un armored Aluminum Cable
Insulation	Class A
Nominal system voltage (KV)	12
One Minute power frequency withstand voltage (kV)	28
Peak impulse test withstand voltage (kV)	75
No load losses	Shall be furnished during basic engineering
Load losses	Shall be furnished during basic engineering
Transformer sizing calculation	Shall be furnished during basic engineering
Clearance in air (mm)	
Phase to Earth (mm)	110
Phase to Phase (mm)	127

© 2022 MECON LIMITED. All rights reserved

ITEM	PROJECT SPECIFICATION
Permissible temperature rise at rated output over the ambient temp at Hot spot	
Transformer Oil	45 ^{0} C
Winding (Resistance method)	50 ^{0} C
Fitting & Accessories	Transformers shall be provided with following: 23. First fill of oil with 10% excess in drums 24. Neutral bushing CT with terminal arrangement 25. Conservator with oil filling hole, cap and drain valve sump, drain valve and detachable end plate. 26. Magnetic type oil gauge with low oil level alarm contacts 27. Silica gel breather with oil-seal 28. Buchholz relay with independent alarm and trip contacts 29. Required Nos. of pressure relief valves/vents with trip contacts 30. Pockets on tank cover for thermometers for WTI and OTI 31. Oil temperature Indicator with maximum pointer and two sets of contacts 32. Liquid level indicator with contact for alarm and tripping. 33. Winding temperature indicator with maximum pointer and three sets of contacts 34. Winding temperature indicator for remote indication 35. Oil filling hole with flange and bolted cover 36. Rating & diagram plate 37. Jacking pads 38. Lifting Lug

© 2022 MECON LIMITED. All rights reserved

ITEM	PROJECT SPECIFICATION
	39. Air release devices 40. Inspection cover with neoprene gaskets 41. Earthing terminals (2 nos. on diagonally opposite sides) 42. Power Terminal boxes for Primary & Secondary 43. Marshalling kiosk for termination of control cables. 44. Flange wheel/rollers
Quality of Operation	
Performance	As per IEC- 76 / IS-2026, with Type testing heat run and Impulse

10.07.04.03 Drive Converter System (Low Voltage Drive)

ITEM	PROJECT SPECIFICATION
MECHANICAL PARAMETERS	
Design	Dust and Vermin proof with Hinged doors.
Front	Single with Back approach facility
Mounting	Floor mounted, free standing with base channel of 50 mm for fixing on floor insert.
Sheet steel	Minimum thickness 1.6 mm
Lifting facility	For each transport section. Removable type.
Length of Shipping Section	3000 mm (max.)
Protection class	IP-43
Cooling	Forced Air Cooling
Cable entry	From bottom of the panel. Cable gland plates shall be provided.
Incomer Termination	Aluminum Cable (min 10 sq mm size)
Minimum Height of mounting equipment inside panel	150 mm

© 2022 MECON LIMITED. All rights reserved

ITEM	PROJECT SPECIFICATION
Panel Interior shade	Off white
Operating height	Between 450- 2000 mm
Power bus bars	Copper with Color marked. Horizontal at the top of panel
Earth Bus Bar	Aluminum. Horizontal at the bottom of the panel. Half the size of Power Bus-Bar.
Power Terminals	Suitable for Aluminum cables (min. 10 sq. mm size)
Control Terminals	Min 6 mm sq size with visible physical barriers for different voltage grades
Spare Terminal	20 % for control terminals
Door Interlock	Compartment door interlocked with Main Power Isolating Device (with provision of defeating it)
ELECTRICAL PARAMETERS	
Duty	Group feeding to Roller Table Motors and other duties as specified in the M & C List Common DC link shall be used wherever possible.
Power supply	415V, 3 Ph, 50 Hz, AC, through reactor/line choke
Rated Insulation Voltage	1100 V / As per IEC 60439
Short Ckt. Rating	as per systems design
Impulse withstand Voltage	4 KV / As per IEC 60439
1 min Power Frequency withstand voltage	2.5 KV for Power Circuit & 500 V for Control Circuit / As per IEC 60439
Rated peak withstand current	Not less than 2.1 times specified Short Circuit Level / As per IEC 60439.
Control voltage	240 V AC through single control transformer with ± 2.5% & ± 5% tapping For 24 V DC supply separate dedicated power supply unit shall be considered .

© 2022 MECON LIMITED. All rights reserved

ITEM	PROJECT SPECIFICATION
Incomer	Molded Case Circuit Breaker upto 630 A and ACB (for 800 A and above)
Outgoing	Molded Case Circuit Breaker upto 630 A and ACB (for 800 A and above)
Circuit components	Type 2 co-ordination
Power Contactors	Min size of 25 A. All contactors shall be 25% greater than its AC3 rating
Auxiliary contactor	2 NO + 2 NC for ACB / MCCB / Power Contactor / O/L relay
Control Wiring	By 1.5 mm sq Stranded Copper Wires
Indication of power availability	Indication through lamp on panel door
Indications	ON/OFF/TRIP for Incomer & outgoing Feeders on panel front. Control supply 'ON'
Metering for Incomer	Ammeters & Voltmeters with fuses and selector switch
Metering	1. Motor speed (Local + Remote) 2. Motor current (Local + Remote) 3. Through 1 amp. Secondary CT motor voltage (Local)
Motor Start class	150 Starts/ hr. for non-reversing duty roller tables
Inverter type	IGBT based PWM Variable Frequency Drive
Configuration	Common DC bus
Speed range	10 – 100 / 140%
Frequency range	1. 0 – 50 Hz in constant torque regime 2. 50 – 80 Hz in constant HP regime
Control mode	Forward / Reverse with Inching
Braking	Regenerative
Potential free contacts	1. Inverter ready 2. Inverter fault
Power socket outlet	Required

© 2022 MECON LIMITED. All rights reserved

ITEM	PROJECT SPECIFICATION
Drive Protection Functions	1. AC line surge suppressor 2. Current limiting chokes 3. Phase sequence 4. Semi Conductor fuses 5. Under Voltage 6. Transient Over Voltage 7. Earth Fault 8. Over Load 9. Motor over current (Instantaneous and thermal) 10. AC instantaneous short circuit 11. Motor over temperature 12. Regulated power supply failure
Drive Protection Functions	13. Gate suppression for protection against circulating currents 14. Fuse failure protection
Drive Diagnostic functions	1. Detection of all monitored functions 2. Phase sequence failure 3. Semi Conductor fuse failure 4. Under Voltage failure 5. Transient Over Voltage failure 6. Earth Fault failure 7. Motor over current (instantaneous and thermal) 8. AC instantaneous short circuit 9. Motor over temperature 10. Regulated power supply failure 11. Communication error

© 2022 MECON LIMITED. All rights reserved

10.07.04.04 Drive Motors (Low Voltage VFD Fed)

ITEM	PROJECT SPECIFICATION
Constructional Features	
Type	Inverter duty Squirrel Cage AC Induction Motor
Frame Sizes	As per IEC-34 / VDE-0530 (with gear box)/ VDE-520 (without gear box)
Stator Body Material	Grey Iron Casting
Motor feet	Integrally cast with the stator body
Motor Winding	Copper
Cooling Fins	Longitudinal
Degree of Protection	IP-55
Cooling	IC-411 (Frame surface cooled by shaft mounted cooling fan)
IE Class	IE 3
Mounting	As per M & C List
Bearing suitable for	1. Bi-directional motion for reversible motors 2. Above 280 Frame, NDE bearing shall be insulated to take care of the bearing current
Lubrication	Grease for motor bearing through nipple on both DE & NDE
Accessories	Motor Fixing Bolts, Nuts and Washers
Earthing terminals	Two. On the opposite sides of motor body
Special Design criterion	1. Stator winding insulation system shall be subjected to high insulation stress in the phase-to-phase, phase to enclosure and turn-to-turn insulation 2. Motors shall be designed to withstand additional stress on the winding due to high switching frequency of the PWM drive
Nameplate	Shall be of stainless steel and stamped

© 2022 MECON LIMITED. All rights reserved

ITEM	PROJECT SPECIFICATION
	per NEMA Standard MG1 Part 10, 12 & 31
Terminal Box	
Terminal Box	On top of the motor suitable for termination of Aluminum cables Rotatable by 4 x 90 deg
Cable Glands	Double Compression Type
Suitability	The terminal box shall be suitably sized so as to accommodate 3-core Aluminum Cable termination
Quality of Operation	
Performance	As per IEC-34 / VDE-0530 (with gear box)/ VDE 520 (without gear box)
Electrical Design	
Input Power	415 V, 3-ph, 50 Hz, AC
Power supply variations	As per Supply Conditions
Power Supply	From IGBT based PWM Variable Frequency Drive
Service factor	1.0 for VFD power
Peak transient voltage	1500 V (Phase to Phase)
Minimum rise time	0.01 μ - sec
Max DC Link Voltage	750 V DC
Operation	Constant Torque Up to base speed and Constant Horsepower beyond Base speed
Max speed permissible	150 % rated for 2 minutes
De-rating for VFD	As per above-mentioned conditions and to compensate for the losses caused by the harmonics of the motor current (THD= 5%). Additional de-rating of the motor, if required, due to the speed range as given in the M & C List, shall also be considered.
Class of Insulation	Class-F with Temp rise limited to Class B
Over speed capability	120 % for 2 mins
Embedded Thermistor	One PTC at hot spot per phase

© 2022 MECON LIMITED. All rights reserved

10.07.04.05 LV Fixed Speed AC Motors

ITEM	PROJECT SPECIFICATION
Constructional Features	
Type	Squirrel Cage AC Induction Motor
Motor Body	Gray Iron Casting
Motor Feet	Integrally Cast with the Stator
Motor Winding	Copper
Cooling fin	Longitudinal
Degree of Protection	IP-55
Cooling	IC- 411 (Frame surface cooled by shaft mounted cooling fans)
IE Class	IE 3
Mounting	As per M & C List
Ambient Temperature	50 Deg C
Shaft extension	As per M & C List
Bearing suitable for	Bi-Directional motion for reversible motors
Lubrication	Grease for motor bearing through nipple on both DE & NDE
Coupling	Finish Boring, key seat cut and fitting of motor half coupling is included in the scope of motor manufacturer
Accessories	Motor base plate / foundation plate, anchoring mechanism, foundation bolts, Motor fixing bolts, nuts and washers
Earthing terminals	Two. On the opposite sides of motor body
Terminal Box	
Terminal Box	On RHS looking from the drive end of the motor suitable for termination of Aluminium cables (IP- 55) Rotatable by 4 x 90 deg
Extension of TB	Shall be possible for accepting Aluminium cable, wherever required
Cable Glands	Double Compression Type
Quality of Operation	

© 2022 MECON LIMITED. All rights reserved

ITEM	PROJECT SPECIFICATION
Performance	As per IEC-34-1 / VDE-0520 (without gear box) / VDE-0530 (with Gear Box)
Electrical Design	
Input Power	415 V, 3-ph, 50 Hz, AC
Power Supply	Fed from DOL Starter housed in MCC
Class of Insulation	Class-F with Temp rise limited to Class B
Min Voltage for Start & Run up	80 % of Rated Voltage
Over speed capability	120 % for 2 mins
Space Heater	For motors above 75 KW

10.07.04.06 MCC, PDB, & Other Cubicles

Motor Control Center (MCC)

ITEM	PROJECT SPECIFICATION
Design	Conventional MCC with remote I/O panel as part of MCC suit.
Construction	Modular construction fully compartmentalized with partitions & free standing with base channel.
External power cable termination	External power cables shall be terminated at terminal blocks provided in the cable alley.(compartment)
Fuse-less design	MCC shall be fuse less design i.e. incomers shall be either ACB / MCCB & outgoing feeders shall be either MCCB / MPCB.
Incoming circuit breaker	The incoming circuit breaker shall have over-load, instantaneous over-current & E/F protection via inbuilt or external microprocessor based protection relay
Sheet steel thickness	2 mm for load bearing, 1.6 mm for non-load bearing
Cable entry	from bottom

© 2022 MECON LIMITED. All rights reserved

ITEM	PROJECT SPECIFICATION
Extension provision	Extendible on one side
Padlocking provision	Required
Operating height	min. 300 mm & max. 2000 mm
Removable bottom gland plate	3 mm thick
Removable lifting hook	for all shipping sections
Legible identification labels	Anodized aluminum with white letters engraved on black background with letter sizes of 25-50 mm for panel, 5 mm for components & module name plates.
Danger board	in front & rear in English & Hindi
Earthing terminals	Two separate earthing terminals
Control transformer	One control transformer in each MCC
Maximum rating for incoming line	1600A.
Motor feeders	MPCB shall be used up to 7.5 kW motor rating. MCCB shall be used above 7.5 kW motor rating. Control transformer primary circuit shall have MPCB.
Standard overload relay	Below 37 kW
EOCR with indication	For motors from 37 kW to 110 kW.
Micro Processor based relay	For motors of above 110 kW.
Use of CT	Motors rating from 11 kW up to 22 kW shall be provided with CT in the middle phase for connecting to ammeter. However, Motors rating 30 kW and above shall be provided with CT in all the three phases for connecting to ammeter. Motors with rating 11 kW and above shall be provided with ammeter with dual range.
Control bus bar	Copper
Indication lamps	22.5 mm dia (LED cluster) for incomer

© 2022 MECON LIMITED. All rights reserved

ITEM	PROJECT SPECIFICATION
	& outgoing panels on/off trip &R,Y,B indication.
Meter sizes	96 x 96 mm size meters.
Incomer relays	Microprocessor based relay with overload, short circuit & E/F protection. via inbuilt or external protection relay
Min. size of power contactor	32A.
Power contactor auxiliary contract	2NO+2NC.
Breaker type selection	MCCB upto 630A & ACB >630A.
DOL starter	Constant speed motors up to 132 kW shall be fed with DOL starter at 415V. No star delta feeder shall be provided.
Spare feeders	Fully equipped & wired shall be provided for each MCC with minimum 20% spare feeders with at least one most common rated feeder & one largest feeder.
Remote I/O units	Shall be housed inside individual MCCs.

DESK / OPERATOR STATION / LOCAL BOXES

Item	Project Specification
Mechanical Construction	
Mounting	Free standing with base channel / wall mounted type
Construction	Control Desk Top shall be of stainless steel with hinged sloping front. Access to cable termination and devices shall be from the front door.
Sheet Steel Thickness	2 mm for load bearing (min.)
	1.6 mm for non-load bearing (min.)
	3 mm for Removable bottom gland plate (min.)
Cable entry	Cable entry from bottom

© 2022 MECON LIMITED. All rights reserved

Item	Project Specification
External Power & Control Cable Termination	External cables shall be terminated at terminal blocks.
Identification labels	Anodized aluminum with white letters engraved on black background with letter sizes of 25-50 mm for panel, 5 mm for components & module name plates,
Danger board	In front in English & Hindi
Earthing terminals	Two separate earthing terminals
Protection class	For control desk shall be IP- 43. For local control desk & local control boxes shall be IP-54.
Lifting hook	Removable type for all shipping sections
Electrical Design	
Elements	Push buttons, indication lamps & selector switches as may be necessary shall be available.
Master controllers	For manual operation of Main Drives & Roller Table Motors shall be provided on control desk.
Indication lamps	22.5 mm dia (LED cluster)
Meter size	96 x 96 mm size meters.
Remote IO Units	Shall be housed inside individual panels as required
Power socket outlet	Shall be provided

10.07.05 Automation System

General

Thechoiceoftheautomationsystemsmakinguptheplantisrelatedtoth eachievementof thefollowinghigh-priorityobjectives,namely:

- Highqualityproducts
- Highproductivity
- Maximumsimplicityofoperation
- Operationreliability with Limitedinvestmentcosts

© 2022 MECON LIMITED. All rights reserved

- Maximumflexibilitytomeetvariousmarketdemands

Bidder's Automation system shall be responsible for minimum following process:

- Melting Furnaces
- Holding Furnaces
- D.C Casters
- Homogenizing Furnaces
- Scalping and Band saw line.

However any technological area/process or interconnected between process requirement for automation is there, the same shall be considered by bidder. Take over point of material shall be Al Ingot storage and alloy storage

Control of the Furnaces and DC casters shall be achieved by Two (2) Levels of Automation System e.g. Basic Automation (Level-1) and Process Automation (Level-2).

The Automation system shall be based on Client - Server configuration and shall provide on line control functions for the Process and Equipment. The main process and equipment control functions are

- Sequencing & Interlocking
- Reference Generation for Drives
- Interfacing with Control Consoles and Drives
- Storing of Data for Trending
- Closed loop control functions.
- Set up calculation function
- Logging and storage of process parameters.
- Generation of Fault Annunciation
- Display of Soft Metering
- Management of HMI Terminal
- Gateway for Data Communication horizontally
- Gateway for Data Communication Vertically to Higher Level

© 2022 MECON LIMITED. All rights reserved

Computer.

- Shift report generation
- Order Management system
- Temperature calculation
- ladle turret
- Launder System
- Launder Metal Level Control
- Trough metal level
- Furnace monitoring
- Degasser monitoring
- Trough Lift control
- Trough Tilt control
- Trough metal temperature
- Centralized lubrication system
- Main hydraulic system
- Detection of casting failures
- Handling of casting trough
- Slab/ Ingot Storage system after casting
- Slab/ Ingot Handling &Storage system after homogenizing.
- Marker machine (through OEM PLC)
- Emergency Cast stop and start facility shall be provide in the PLC system along with the necessary hardware and software with all necessary interlocks in it.
- Mold oscillator
- Mold filling sequence
- Mold level Control
- Casting Speed control
- Mold metal level early fill control
- Mold Lubrication

© 2022 MECON LIMITED. All rights reserved

- Slab/ Ingot length measuring system
- Mold cooling water flow control system
- Casting pit water level control system

10.07.05.01 Basic Automation and PLC System (Level-1)

Automation (L-1) Cubicle Features

i. Incoming supply shall be through MCCB.

ii. Protection class shall be IP- 42.

iii. Remote I/Os shall have protection class of IP- 44. However, remote I/O panels shall be supplied with suitable cooling arrangement (e.g. panel mounted air conditioner) to perform satisfactorily at the plant floor ambient temperature mentioned in the TS.

iv. Interrogation power supply for Remote I/Os shall be generated locally

v. Power supply of remote I/O cards to MCC shall be individually protected.

vi. MCC commands shall be read back to PLC.

vii. Paining shall be RAL-7035

Scope of Supply

i. Indicative number of cards (Digital & Analog I/O), counter card, PID controllers etc. shall be furnished during engineering.

ii. Runtime version of software for each Client shall be provided.

iii. Dedicated PLC system shall be consider for each process like melting furnaces, holding furnaces, caster and Homogenizing Furnaces.

iv. Each process system shall have one EWS for Basic Automation System.

© 2022 MECON LIMITED. All rights reserved

v. Development version software shall be provided for each of the following systems

a. Each EWS for Basic Automation System (BAS) housed in individual automation rooms and control pulpits.

b. Technological Control System (except proprietary software)

c. HMI System

d. Process Computer Server (Level-2)

Any module specifically developed for this project shall be provided along with its source code except for mathematical models.

Network Management Software: Network management software shall be provided

Anti Virus Software (AVS) :AVS– (Enterprise Edition) provided for Employer & server shall have 5 years up gradation license

Interface to other systems

Interface with following Automation systems at various levels, as may be necessary for the Plant Operation, shall be included in Bidder's scope

- Pre heating Furnace Automation System
- Water Treatment Plant (WTP Automation System, Lab and other Utilities).
- Production Planning and Control System, Maintenance Planning & Monitoring System (ERP/ Level-III).

Automation interface with third party automation systems shall be the responsibility of the respective parties involved with the following philosophy. Hardware (connecting cable, repeaters, if required, laying & termination) & Software shall be provided by the party receiving the information.

© 2022 MECON LIMITED. All rights reserved

Hardware and Software

Automation hardware supply shall be as per the latest tested model/type available at the time of order placement on sub-vendor. One development version software shall be provided for each Technological Control System, one for HMI server and one for Process server.

Antivirus software (enterprise edition) provided for Employer & server shall have 5 years up-gradation license.

Necessary diagnostics software shall be provided as part of supply.

Production data and any other necessary information shall be transmitted to/from the Level-3 Automation System, by the Bidder. The Bidder shall provide network/hardware connectivity to the extended Plant Wide network and shall do necessary programming to receive and send plan and actual production data to the proposed Level-3 Automation System.

Based on the production planning data from level-3/PPC data fed manually, this module shall be used to decide the production cycle, schedule sequence of order processing, material to be processed, material actual data, production data, etc.

There shall be provision to provide production information and production parameters to the related shops/units. In the absence of mutual agreement of upstream and downstream units regarding data exchange, “ASCII” format for data transfer shall be done, over TCP / IT sockets. Information shall be cyclic / event based.

Secured web access to be provided with necessary firewall and spy ware software. Provision for remote maintenance from Bidder’s office is included.

Development system shall be provided with simulation model.

Software

System software for Operate IT server	Microsoft Windows 10/11 professional
Application software for Operate IT server	License for Aspect server software License for Connectivity server software

© 2022 MECON LIMITED. All rights reserved

System software for operator station Application software for operator station	Microsoft Windows 10/11 professional License for Operate IT Operator Workplace
Software for engineering station	Microsoft Windows 10/11 Professional
Application software for engineering station	License for Operate IT Engineering Workplace
Software for PC Gateway	Microsoft Windows 2019 Server Latest or window 10/11

Graphical User Interface System

The Level-1 control is based on PLCs and Drives, which control the actuating systems and ensure fast dynamic performances. All the sequential and interlocking functions shall be done from PLC. It shall communicate with RIOs, VFDs, Soft starters, weighing system panels, etc. on a field bus. Different PLCs, PCs, HMIs etc shall be interconnected through a high speed Ethernet bus. The system shall also be capable of communicating to other associated Automation systems. Type of PLC and drive controllers shall be limited to same type for the entire package.

All terminal blocks for digital inputs of PLC shall have suitable individual fuse and fuse blown indication shall be provided

Safety Requirements of the Control System

Location of E-Stop push buttons shall be mentioned. E stop shall have 2 NC contacts.

Control philosophy of furnace shall be as per technological write up in technical chapter of different type of furnaces required for this project and same shall be finalise during engineering stage.

10.07.05.02 Process Automation System (Level-2)

Level-2 Automation System shall be a microprocessor based system and shall provide the set up functions for actuation of

© 2022 MECON LIMITED. All rights reserved

various equipment. It shall calculate the different set values parameter by means of math models and shall provide it to Level-1. Proposed Automation system shall be complete with all technological controls. Separate Process Control & Database Server shall be provided for individual process functions.

Configuration

Fault-tolerant server with dual-modular redundant (DMR) architecture (Hot standby servers). The server is comprised of two CPU and two or four PCI modules, operating in lockstep. There is constant crosschecking and synchronization of the modules, performed by the fault-tolerant chipset.

Two number of data base servers (stand-by) connected in RAID-5 configuration with disc mirroring.

Features

The envisaged computer system shall also have optional provision for connectivity to the employer's ERP (Level-3) computer system for receiving Primary Data Input (PDI) of the input Al Ingot and alloys as explained in Clause No- 37 & 38.

Primary Data Input (PDI) data handling procedures & Data exchanges between with Internal and External Automation systems shall be specified during Basic Engineering.

The Bidder shall consider the following.

i. 3 (three) numbers external Hard disk of 2TB drives shall be provided for back-up.
ii. Monitor shall be 21"colour LED for server & Employer computers
iii. Printers shall be A4 laser color
iv. PDI Data (eg. Production Order and Customer Order) shall be considered
v. Scanned web access to be provided with necessary firewall & spy ware

© 2022 MECON LIMITED. All rights reserved

vi. If Development system has any simulation model (Furnaces & caster), a facility for offline tuning & testing of these process models without interruption to online system shall be included.

vii. Necessary licenses for OS (Server & Employer) shall be provided. Minimum 10 nos. named user licenses for data base is to be provided.

Technical data

Switchgear cabinet

Dimensions approx. H 2200 W 4000 mm D 800 mm. Colour RAL 7035 (grey); protection is IP42. With 240 V AC socket and illumination via separateswitch Consisting of:

- 1 power cubicle 415 VAC, 3~, PE, 50 Hz, app. 7 kVA
- 1 cubicle for digital I/O, based on PROFIBUS, digital inputs protected - as far as possible - by fuses
- 1 cubicle for analogue I/O with terminals and interface rack, swing frame
- 1 cubicle for control rack, Ethernet switch and PC's for programming and diagnostics, drawer mounted for easy access purposes
- fiber optic interface modules for Profibus.

Level 2 – Process Control Computer

A Level 2 automation system is been proposed for this furnaces and casters Information is of increasing importance for the management and operation of the plant. Complete, actual and correct information is the key for the right decision in time. Easy supervision and statistics, which are based on well structured and save stored information, allow early detection of changes in the production or operation of the plant.
Increased process visibility leads to:

© 2022 MECON LIMITED. All rights reserved

- Quick reaction to deviations from standard operation of the plant
- Fast detection of problems of the process
- Improved logistics of process and production
- Higher reliability, flexibility and availability of the plant

Continuously increasing demands on the quality of finished rolled rails are an everyday requirement for the operation of the plant.

General Description

The Level 2 Automation System is built up from a set of personal computers operating in a client-server configuration. The database and the application software of the Level 2 are running on the server computer. Several clients shall be located in the control pulpits/offices and connected to the server via LAN. The clients provide the Human Machine Interface to the operators/engineers for their supervision work. The HMI program can run on any Level 1 operator station or on a separate operator station, which is only in use for the Level 2.

The HMI screens are designed in hierarchical structure in order to provide well usability and clear overview.

Interfaces are foreseen for solid and transparent inter-operability between the basic automation and the Level-2. Also order data from Customers Level-3 computer system can be integrated.

The Level 2 shall support the operator to select the correct and complete setups to the machines in order to ensure a safe, flexible and transparent section production on a high quality level. Further on the Level 2 shall collect and store quality data from the process to give actual and historical reports of the real production conditions. The specific HMI provides the operator with display and operation functionalities.

The application software shall be designed according to our experience with this type of plants and supports the staff and the management in planning, supervision and optimizing the plant operation by the following functions:

- Production Supervision

© 2022 MECON LIMITED. All rights reserved

- Production tracking
- Supervision of timing
- Acquisition of production data
- Acquisition of main process data and quality data

- Reporting
  - Order report
  - Plant production report (per shift, day , rolling lot)
  - Quality data reporting
- Management functions
  - Customer order handling
  - Management of Production Plan
  - Shift and crew assignment

Level - 2 Server Hardware

PC Hardware	Description
Server Hardware	1 Intel® Xeon™ Processor 3,0 GHz Dual-Core 1x 4 GB RAM 6 Hard Drives 16/32 GB RMP (RAID 5.0 configuration) 4x Network adapter 10/100/1000 1 Disk Controller (RAID) 1 Internal storage: CD-RW/DVD-ROM Combo 1 Internal storage: DAT Tape drive 72 GB 1 Hot Plug Red. Fan 2 Hot Plug Red. Power Supply 1 Monitor LED 19” 1 Standard US-English type keyboard 1 2-Button Scroll Mouse

Client Hardware

© 2022 MECON LIMITED. All rights reserved

General ("Office type") user client hardware

PC Hardware	Description
Client Hardware	1 Intel® Core i7 11th generation 18 GB RAM 1 Hard Drive 1TB SATA 1 Network adapter 10/100/1000 1 Internal Storage: DVD R/RW Drive 1 Monitor LED 21" 1 Standard US-English type keyboard 1 2 - Button Scroll Mouse, Mouse Pad

Standard Software

General ("Office type") user client standard software

PC Software	Qty	Description
Operating System Software	lot	Windows XP incl MS Internet Explorer 6.0
Security Software	lot	Virus protection: McAffee Virus Scan Prof Backup software: Norton Ghost Solution Suite
Document Reader	lot	Adobe Reader

10.07.05.03 HMI System

HMIs shall be provided in all pulpits for operator's interface as per functional requirement of the plant. HMI system shall provide facilities like furnaces and caster Operation, Data Logging, Trending & History of Alarms, Events and operator actions. History shall be available in the server for a period of minimum two months. Engineering stations shall be included for each ECR, automation room etc system shall be capable of generating Reports at certain interval or on Operator's request and shall be as but not limited the following:

- Shift report
- Daily production report
- Monthly production report

© 2022 MECON LIMITED. All rights reserved

- Material report
- Alarm log
- Protection of certain types of data, such as casting practices, with various levels of security
- Casting recipe storage, recall and password protected editing
- Pre-cast checklists
- Casting station color graphic overview screen with display of all critical process variables
- Replaces non-critical pushbuttons
- Graphic display of cautions and alarms
- User customizable experience – Layouts, colors, defaults, KPI's, screens
- Condition lists for all critical control functions
- Alarm and event notification via email and VOIP (requires email and VOIP server accessibility)
- Alarm troubleshooting information
- Integrated links to drawings and manuals
- Multiple display support
- Multiple instance support
- Display alarms and alarm status in real time as well as historically
- Real time and historical trending of process variables for aiding in troubleshooting ingot & billet defects and improving product quality
- Casting recipe development
- Mold metal level control calibration screen
- Mold setup
- Cast permissive checks
- Level 1 alarms
- Level 2 alarms

© 2022 MECON LIMITED. All rights reserved

- Level 3 alarms
- Mold metal level control overview
- Maintenance screens
- Custom trending screens

Human Machine Interface

i. HMI servers shall be provided with hot standby facility.

ii. HMI controller shall have Intel Xeon processor or any other later version.

iii. 21" color LED monitors shall be provided for all HMI & EWS applications.

iv. HMI system – Data history shall be available in server for 2 months (Minimum). Event and Alarm logging data history shall be for 1 week.

HMI Functions

HMI function shall include Utility systems overview and status (e.g. Lubrication, Hydraulics, Media, Water and Grease) for Mechanical Maintenance monitoring.

In addition the HMI Employers required for the Operation of the plant, one HMI Employer each for Mechanical Maintenance, Electrical Maintenance and Shift in charge, shall be provided

Display Unit

In addition to the normal workstation one 42" LED display units and one LED projection system shall be provided in one central control room. One no. ceiling mounted LED projector with screen and good quality audio system with microphone shall be provided. This system shall be interfaced through Audio Visual switching units to all the network computers. Large display board shall be installed on the furnace area and casting platform for display of following parameters like :

- Melting and Holding Furnace related data like -

© 2022 MECON LIMITED. All rights reserved

- Molten Alumunium temperature in melting furnace
- Molten Alumunium temperature in Holding furnace
- Furnace wise molten Alumunium production data
- Any other relevant data pertaining to production

- Caster System related data like -
  - Ladle weight on ladle turret (in T)
  - Hot metal temperature (in deg.C)
  - Casting speed (in m/min)
  - Casting time (in min.)
  - Any other relevant data pertaining to production

Visualization System

Workplace

Workplace is the universal workspace from which Process Portal users view and use process, system and enterprise data. Workplace interface elements specifically designed to accommodate the specific needs of the process control system users as well as offering easily managed workspace at which to perform tasks for the overall management of the enterprise. The layout of Workplace is configured by the user which means that each user can have a customized workplace.

- Window Management
- Efficient and Flexible Navigation
- Plant Explorer
- User Profile Recognition
- Security

10.07.05.04 Measurement Systems & Instruments - Refer Separate chapter.

10.07.05.05 Control / Operator Desk

Control/Operator Desks shall be designed & supplied as per GTS. Location & quantity of control/operator desk shall be finalized during engineering.

© 2022 MECON LIMITED. All rights reserved

Main operator desks

The main control desks are used as a part of an overall process control and monitoring system for the line area concerned. The main control desk and its accessories shall contain all components, instruments, keyboards and monitors to control the concerned line area in all modes. All other control devices in the area are subordinated to the main control desk. A Main control desk shall be included for Drive Controls and Indication, solenoid operations, pump and AC Motors on/off control, HMI. The main desk uses discrete operator devices connected over remote I/O via Profibus. Space for Intercommunication on desks shall be provided.

Local operator Panel and desks

Local Control Post with stainless steel top shall be provided for the accommodation of various controls and logics. The main desk uses discrete operator devices connected over remote I/O via Profibus.

Quantity : 1 Lot.

(Location to be finalized during Detail Engg.)

Local Control Boxes

The local control desks, panels and boxes are used for maintenance as well as controlling auxiliary equipment locally such as hydraulic stations, lubrication stations etc. Local Control Boxes shall be provided for the accommodation of various controls and logics with stainless steel top on each desk.

(Location to be finalised during Detail Engg.)

Note: Dimensions and layout according to requirements during basic engineering.

Junction Boxes for Control Cable Termination:

(1) 10 Terminals 1 Lot.

(2) 20 Terminals 1 Lot.

© 2022 MECON LIMITED. All rights reserved

(3) 50 terminals 1 Lot.

(4) 100 terminals 1 Lot.

10.07.05.06 Structural Pulpit(Only BD,BE and DE)

The following pulpit has been envisaged to supply for this plant. However Bidder (Technologist) needs more nos. of pulpit as per process and operation point of view, the same shall be include bidder scope of supply and mentioned in the offer

1. **CP#1** for Melting Furnaces & Holding Furnaces.
2. **CP#2**for Casters.
3. **CP#3** for Homogenizing Furnaces and Scalping & Band saw line.

All proposed pulpits along with dimension shall be shown on overall layout of the plant and submit along with offer by the bidder.

General Specification

Control pulpit shall be designed taking into account following features

- Location of control posts shall be decided taking care of clear visibility.
- Air lock rooms shall be provided for all the control room / pulpits .
- Inner walls shall be sound proof.
- Granite flooring shall be provided.
- Window glass shall be toughened, heat resistant and of greenish tint, hinged glass to be opened from inside.
- Double glass panels, wherever required, shall be provided to make the control post heatproof.

© 2022 MECON LIMITED. All rights reserved

- Suitable wire mesh shall be provided for the glass windows for protection against mechanical damage wherever required.

However, Final location of the pulpit shall be finalized during engineering. The pulpits shall be complete with sheet steel and structural works with heat insulating material and double glass front, false flooring, false ceiling, fire detection & alarm equipment, necessary control desks, operator's chair etc with attractive aesthetics. Control pulpits shall have 6 mm glass of heat resistant type, pulpits shall be fitted with 50 mm glass wool. The glass shall be shatterproof type. DE of pulpit shall include location co-ordinates, height of operating floor & line of sight drawing. Structural pulpit shall be designed & supplied as per GTS.

10.07.05.07 Automation related other misc. equipment

Automation Network

Communication Network shall be in ring topology

Printer Supply Philosophy

- Laser A3/A4 (B/W) – Each Control Pulpit (CP)
- Laser color A3/A4 – Electrical Control Room (ECR)
- DMP for print on continuous paper

Network Analyzer

Network analyzer (Laptop PC) for detecting & analyzing problems of network / packet level shall be provided.

Cable analyzer

Cable analyzer for detecting network cable fault shall be provided

Consumption Monitoring

Consumption monitoring for power & utilities is included. Bidder shall install necessary instruments e.g. Flow meters wired up to the plant Automation system for recording consumption of media

© 2022 MECON LIMITED. All rights reserved

supplies (water, Air) at the respective TOPs, acquire related data. Available consumption data shall be displayed on HMI/ Level-2 and recorded as Management Information.

Archiving Server

Plant data archiving server shall be supplied for archiving of measured process data/setup data/equipment health data / etc. at desired frequency and in derived form shall be made available by Bidder in a data archival set up of one server . Plant data archiving shall be for at least one year.

Data Analyzer

Online hi resolution (up to 1 m-sec) data analyzer shall be provided.

10.07.06 Additional Systems

10.07.06.01 Uninterrupted Power Supply System

Bidder shall include necessary UPS and ACDB for feeding the loads requiring UPS power supply. UPS shall be rated by 120% of the calculated load. Load factor or diversity factor shall not be considered while calculating the load on UPS. UPS shall have dual inverters, automatic changeover and **100% dual redundancy** with battery backup for minimum **30 minutes**.

Battery sizing calculation shall be furnished and sizing shall be made as per IEEE-485. Battery sizing shall consider temperature factor, aging factor, K factoras per the above standard. Battery shall be VR LA type.

Two separate power supply from different sources shall be provided to UPS – one for UPS and the other for bypass. Bypass supply to equipment shall be through constant voltage transformer.

UPS and SMF batteries shall be located in air conditioned room. The Uninterrupted power supply unit provides protection against voltage variations, transients and supply of power in case of power

© 2022 MECON LIMITED. All rights reserved

failure for :

- Servers
- Workstations
- PLC CPU and Memory
- Local Area Network devices

Technical data

Incomer	: 3 pole MCCB
Outgoing	: SPN MCB
Input Voltage	: 415 V AC +/- 15%, 3-Phase, 4 wire
Rating	: Later during engineering
Short time rating	: 50 KA for 1 Sec.
Input Frequency	: 50 Hz. +/- 5%
Output Voltage	: 240 V AC, 1-Phase
Output Voltage tolerance	: +/- 1%
Output Frequency	: 50 Hz. +/- 0.1%
Total harmonic distortion	: < 5% for linear loads
Converter efficiency	: Better than 94 %
Inverter efficiency	: Better than 90 %
Overload	: 125% of the rated output for 15 minutes 150% of the rated output for 30 sec

Redundancy : The system shall be of dual redundancy type in hot standby mode.

Static bypass	: Automatic static bypass and common DC battery
Battery type	: Sealed maintenance free Lead acid batteries
Battery backup	: **30 minutes**
Mounting	: Floor mounting with base channel of ISMC-75

© 2022 MECON LIMITED. All rights reserved

Enclosure : 2 mm thick CRCA for load bearing
1.6 mm thick for non load bearing members

Degree of protection : IP-32

10.07.06.02 Primary and Secondary Earthing System

Earthing system shall conform to GTS requirements.

Primary Earthing

Bidder's Scope

For primary earthing system, Bidder's scope includes BD, BE, DE, Supervision of Erection & Commissioning.

Necessary earthing pits and its connection from the pits to the primary earthinggrid(electronics) shall remain in the scope of the Bidder only for electronics earthing.

Bidder is responsible to provide necessary primary earthing requirements in respective civil assignment drawing and furnish indicative BOQ of embedded material requirement in concrete during BE and final BOQ during DE for Employer's scope of work for general erathing purpose.

Supply & installation of primary earthing grid (embedded requirements in concrete up to earthing pits located around the plant) shall be in Employer's Scope.

Employer's Scope

Supply & erection of embedded requirements in concrete up to the risers near respective building columns is in employer's scope.

Secondary Earthing

Bidder's scope shall include BD, BE, DE, Supply, Erection, Supervision of Erection and Commissioning of Secondary Earthing in the plant area.

© 2022 MECON LIMITED. All rights reserved

Electronic Earthing

Bidder's scope shall include BD, BE, DE, Supply, Erection, Supervision of Erection and Commissioning of Electronic Earthing in the plant area.

Description

The grounding network includes all the necessary elements to ground against indirect contacts. The grounding network shall consist of:

- An underground mesh made with galavanized steel or copper conductors, integrated with earthing electrodes for dispersing the ground current.
- A set of earthing conductors which connect the mesh with main grounding collectors (typically located in the electric cabins and at the basis of the building columns)

The grounding network shall be accomplished according to IEC standard 364 and scaled depending on resistivity values of the ground, grounding failure current and operating time of the disconnecting devices. The various connections between the conductors to make the system shall be carried out by welding and / or appropriate compression clamps.

10.07.06.03 Lightning Protection System

Excluded from Bidder scope of work. However BD shall be in bidder scope of service.

10.07.06.04 Welding & Small Power Supply Socket System

Excluded from Bidder scope of work. However BD shall be in bidder scope of service.

10.07.06.05 Illumination System

Illumination system is excluded from Bidder's scope. However any

© 2022 MECON LIMITED. All rights reserved

special lighting for any equipments/system is essential for operation/process point of view, the same shall be considered by bidder.

Signaling Equipment

Signaling equipment (e.g. hooters, rotating flash lights, permission & reset switches) as required for the operation of the plant under scope of the Bidder, shall be included in Bidder's scope.

BD, BE, DE, Supply, Erection & Commissioning of the same shall be included in the scope of the Bidder.

10.07.07 Cables & Erection Material

Cables

Scope

All cable specification shall be as per GTS (GS-03). Supply, laying, termination and testing of cables of MV power, LV power, LV control, shielded cable, communication cables & any other cable required for the plant electrical & automation system is included in Bidder's scope.

General

- All 11 kV, 6.6 kV, 1.1 kV power, 1.1 kV control, 1.1 kV signal and special cables for interconnection between the equipment within the scope to make the installation complete.
- All cabling accessories including cable trays, supports, exposed conduits, flexible conduits, glands, lugs, terminal boxes, termination kits for HT cables, etc. as required for completeness of the installation.
- All power, control and special cables as well as all cabling accessories shall be selected based on the guidelines given in UADNL General Specification.
- All cables shall be protected against heat and flames prevailing in the steel melt shop and to meet that requirement proper heat shields shall be provided along with required materials for preparing the structure for supporting the same.

© 2022 MECON LIMITED. All rights reserved

- Cabling shall be carried out in line with the requirement given UADNL GTS.
- Cable laying from MRSS to the shop floor shall be in scope of employer

Specification

Specification of MV & LV cables shall be as per GTS. However, following shall be considered as the guidelines for cable type selection.

a) MV cables shall be armoured, XLPE insulated, FRLS type, aluminum conductor. Cable size selected shall be in the range of 3x120 to 3x185mm2 only.

b) MV cables for VFD application shall be armoured, XLPE insulated, FRLS type, copper conductor for connection from MV drive to MV motor.

c) LV power cables for VFD application shall be unarmoured, PVC / XLPE insulated, FRLS type, screened, aluminum conductor.

d) LV power cables shall be unarmoured, PVC / XLPE insulated, FRLS type, aluminum conductor. Minimum size of aluminum cable shall be 10mm^2. For any requirement of below 10mm^2, copper cables shall be used.

e) LV control cable shall be unarmoured, PVC insulated, FRLS type, copper conductor.

f) Control cables spare core philosophy shall be

Upto 10 cores – 2 reserve core

> 10 cores – 3 reserve core

Screened Cables

- Screened cables for instrumentation PVC/PVC, 700 V class.

Special Cables

- The special cables shall be in conforming to equipment manufacturer's standards.

© 2022 MECON LIMITED. All rights reserved

Scope of Supply

The above types of cables as required have been included in the scope of supply.

Erection Material

Erection work shall be carried out in line with the stipulations of GTS.

The following erection material have been considered.

- Cable racks (horizontal, vertical), ducts and supports, hot dip-galvanised metallic
- Hot dip galvanised metallic conduits, cable protection pipes and accessories,
- Cable fixing materials
- Cable marking material
- Terminal boxes
- Pull boxes and junction boxes,
- Sealing material for wall ducts
- Cable trays, cable protection pipes , type or hot dip galvanised metallic
- Cable tray supports.
- Terminal lug
- Cable shoes

Ladder type cable racks, generally of 3 meter length, shall be selected from two sizes viz., 300 and 600 mm wide and shall be fabricated from 50 x 50 x 6 mm steel angles for longitudinal members and 30 x 6 mm steel flats for cross members placed at an interval of 300 mm along the length of the rack with a provision of double cross members at locations, where cables are to be clamped. Cable racks shall be hot-dip galvanized after fabrication. Minimum value or average mass of zinc coating shall be 610 gm/sqmt. as per IS:4759.

Pre-fabricated perforated trays, generally of 3 meters length made hot-dip of galvanized 3 mm thick sheet steel shall be used for

© 2022 MECON LIMITED. All rights reserved

laying control cables. The trays shall have vertical edge of height not less than 50 mm on both sides. Trays shall be selected from two sizes viz. 300 and 600 mm wide.

GTS pipes for routing of cables, embedded through concrete foundations/floors/walls (including portion above floor level to be laid in continuation for protection against mechanical damage) in plant building shall be of medium gauge, hot dip galvanised, electric resistance welded (ERW), screwed type conforming to IS:1239 (Part I). GTS pipes of the following sizes shall be used:

a) 50 mm nominal bore

b) 80 mm nominal bore

c) 100 mm nominal bore

d) 150 mm nominal bore

Straight-through joints and end sealing of 6.6/11 kV XLPE cables shall be heat shrink type/push on type as called for in the technical specification.

Straight-through joints for 1,100 V grade PVC insulated cables shall be with epoxy resin compound.

Cable glands for terminating cables shall be made of brass or aluminium alloy.

Erection Services

The main scope of the erection services are as follows:
Receiving, unloading and storage of equipment & material at site. Watch & ward. Transportation of equipment & material from stores to erection site.Erection, aligning and fixing of equipment on the respective foundation.Erection of cable trays and supporting structures.Laying& termination of cables.Erection of instrumentation & field devices.

Commissioning

Commissioning entails the start up and taking into operation of the equipment in Bidder's scope of supply, as detailed below.

© 2022 MECON LIMITED. All rights reserved

General

Specially trained engineers shall start up and take into operation the equipment and systems supplied by the Bidder.

Measured data collected during commissioning, which are important for the future running, and checking of the plant shall be collected in a commissioning report.

In addition to commissioning the equipment, the engineers shall also endeavor to instruct selected Employer personnel in the operation of the equipment insofar as this instruction might be necessary for operation and maintenance.

Commissioning work shall be executed in two steps:

Cold commissioning before first rolling

Hot commissioning after first rolling

Cold Commissioning

The following functions shall be executed:

Switch-on power source and auxiliary voltage to the equipment

Additional signal test within cubicle for checking of all safety and protection interlocks

Checking of electrical protection equipment

Function test with motor, not coupled to the mechanical equipment.

Function test with individual motor coupled to the mechanical equipment.

Cold commissioning is completed when the electrical equipment is ready for the first heat.

Hot Commissioning

After completion of cold commissioning the hot commissioning shall start with material in the plant, Services of Bidder's personnel shall participating in the performance test specified in the technical specification. Hot commissioning is completed upon demonstration of performance data or by other contractual agreements.

© 2022 MECON LIMITED. All rights reserved

10.07.08 Special Tools & Tackles

Supply of necessary Special Tools and Tackles as may be required for successful commissioning and maintenance of the Furnaces & Casters are in Bidder's scope. An indicative list is given below:

Sl. No.	Description	Qty.
For Electrics and Level 1 System		
1.	AC/DC tong tester for low current measurement	5
2.	AC/DC tong tester for high current measurement	5
3.	Drive module handling unit	3
4.	4 channel storage oscilloscope with thermal printer	2
5.	16 channel thermal recorder	2
6.	Non contact type thermometer	2
7.	Digital multi-meter with current protection	10
8.	3 phase portable analyzer for energy management	2
9.	Non-contact Laser based thermometer	2
10.	Industrial type Vacuum Cleaner	2
11.	Test kit for testing microprocessor based releases of 415V Circuit Breaker	3
12.	IGBT removal tools	2set
13.	Double ended and Ring spanner set for the required sizes	2set
14.	Socket spanner set for the required sizes	2set
15.	Torque wrenches for the required sizes	3set
16.	Electrician's tool kit	3set
17.	40 pc Multi size Screw driver set with handle	3set
For Level 2 System		
1.	RJ 45 & RJ 11 crimping tools and RJ 45 connectors	3
2.	Tool kit with soldering iron	5

© 2022 MECON LIMITED. All rights reserved

Sl. No.	Description	Qty.
For Electrics and Level 1 System		
3.	Kit for fibre optic testing	2
4.	Fibre optic cable splicing & termination kits	2

10.07.09 Water Treatment Plant

Electrics & Controls for Water SystemExcluded from scope of supply of Bidder. Only Basic Data and Basic Engineering is included in Bidder's scope. However sump pump for the plant shall be in bidder scope of supply.

10.07.10 Air Conditioning & Ventilation System

Electrics & Controls for Air Conditioning &Ventilation System is excluded from scope of supply of Bidder. Only Basic Data and Basic Engineering is included in Bidder's scope.

10.07.11 Compressed Air System

Electrics & Controls for Compressed Air Station is excluded from scope of supply of Bidder. Only Basic Data and Basic Engineering is included in Bidder's scope.

10.07.12 Laboratory Equipment

Electrics & Controls for Laboratory is excluded from scope of supply of Bidder. Only Basic Data and Basic Engineering is included in Bidder's scope.

10.07.13 Drawing & Documentation

Layout Issue

Bidder shall submit along with offer an overall layout of the plant showing the proposed location of ECRs, transformer rooms, control pulpits, oil cellars, pump houses, water cellars &interconnectivity between all these premises through main cable routing tunnel/ overhead gallery/ trench.

© 2022 MECON LIMITED. All rights reserved

Document Submission Schedule

For engineering & technical documentation of electrical & automation systems under Civil assignment of electrical premises & plant floor, Drawing list with drawing numbering scheme, Basic Engineering, Detailed Engineering, Vendor drawing/data sheet, As Built Drawing, Maintenance & operation Manual, catalog etc list and submission schedule shall be submitted by successful bidder during Kick off meeting of this project.

10.07.14 Services

10.07.14.01 Inspection

For details, refer Commercial Part of this Tender document.

10.07.14.02 Training

Details & duration of training for electrical & automation system shall be as other part of this Technical specification.

10.07.14.03 Erection

Scope

Erection of Electrics & Automation supplied by the Bidder, Supervision of Erection, Checking completeness of erection, Testing and complete Commissioning including Commissioning Supervision, Conducting mile stone linked tests stipulated under this contract and Post Commissioning services. Erection shall be done as per GTS Specification. For details scope of erection, testing & commissioning refer Scope Division Chapter.

Description

Erection shall be done as per GTS

Measurement of Soil Resistivity

Measurement of Soil Resistivity shall be the responsibility of the Bidder.

© 2022 MECON LIMITED. All rights reserved

Cable Ways

Necessary Cable way Engineering and Supply required for all the equipment under scope of supply of the Bidder, are included in Bidder's scope.

i. Cable ways shall be provided with material fully galvanized.

ii. Minimum thickness of galvanization shall be 75 microns.

iii. Cable ways for FO cables & shielded cables shall be fully covered.

iv. Cable way engineering, supply and Erection shall conform to GTS requirements.

10.07.14.04 Testing & Commissioning

Following shall be the responsibility of Bidder:

i. Planning and preparation of all necessary test procedures on mechanical, electrical, hydraulics/lubrications, instrumentation and automation equipment and / or system

ii. Checking, setting and adjusting of the equipment / individual components such as mechanical, electrical, hydraulic, etc. under production conditions.

iii. Final adjustment of parameter and set points and determination of the parameters for the tests under production conditions.

iv. Preparation of operation and acceptance test recording system

v. Supply of consumables and measuring devices during installation

vi. Safety norms and protection measures to be suggested by Bidder as part of erection & commissioning document.

vii. Submission of system & application software back-ups for Level-1 & Level-2 Systems (run-time & development, as applicable).

10.07.14.05 Spares

Bidder shall provide spares support services for at **least 10 years** for all the equipment under Bidder's scope.

© 2022 MECON LIMITED. All rights reserved

10.07.15 Commissioning Spares

Necessary commissioning spares as may be required for successful commissioning of the plant is included in Bidder's scope. A proposed list of Commissioning spares is given below. However, any additional commissioning spares required during commissioning shall be supplied by the Bidder free of charge without affecting the overall time schedule of the project.

Description	Qty
Drives & Distribution transformers	
Primary MV terminals	1 set of each type & size
Secondary LV terminals	1 set of each type & size
LCSS	
HRC Fuses	1 set of each type & size
Flag relays	1 set of each type & size
Main MV inverters	
Control card	1 of each type & size
Communication card	1 of each type & size
Power Semiconductor fuses	1 set of each type & size
Fuses	2 sets of each type & size
Aux. Contactors	1 of each type & size
Aux. Relays	1 of each type & size
Aux. contacts for contactors	2 sets of each type & size
Power supply units	1 of each type & size
Water cooling unit miscellanea sensors	1 set of each type & size
Drive operator panel	1 of each type & size
Main & Aux. LV drives	
Regulation cards	1 of each type & size
Communication cards	1 of each type & size

© 2022 MECON LIMITED. All rights reserved

Description	Qty
Fuses	2 sets of each type & size
Circuit breakers	1 of each type & size
Disconnector switch	1 of each type & size
Lamp & PB	2.5% of each type & size
Contactor	1 of each type & size
Thermal relays	1 of each type & size
Aux. relays	2 of each type & size
Aux. Transformer	1 of each type & size
Low voltage switchboard (MCC)	
Circuit breakers	1 of each type & size
Dis-connector switch	1 of each type & size
Lamp & PB	2.5% of each type & size
Power contactors	1 of each type & size
Contacts for power contactors	1 of each type & size
Thermal relays	1 of each type & size
Aux. relays	2 of each type & size
Aux. contactors	2 of each type & size
Aux. Transformer	1 of each type & size
Fuses	1 set of each type & size
Aux. Contactors	1 of each type & size
Aux. contacts for contactors	2 sets of each type & size
LV AC motors	
Encoder	1 of each type & size
Roller table motor	1 of each type & size
Personal Computer automation	
Monitors	1 each type
Functional keyboard	1
Pointing device	1

© 2022 MECON LIMITED. All rights reserved

Description	Qty
Personal computer (client workstation)	1
Control desk and control boxes	
Selector switches	2.5% of each type & size
Pushbuttons	2.5% of each type & size
Mushroom Head Pushbuttons	3 nos.
Lamps	2.5% of each type & size
Functional keyboards	2.5% of each type & size
Operator Panel	1 of each type & size
PLC based automation	
CPU card	1 of each type & size
Power Supply	2.5% of each type & size
Digital & Analog I/O cards	2.5% of each type & size with min. 2 nos.
Fast digital input output cards	1 of each type
EPROM memories with the final programs to be supplied at the end of start-up	1 set
Batteries	1 of each type & size
Auxiliary Plants	
Power sockets	2.5% of each type & size
LAN Components	
Router/Switch	1 no.
Instrumentation and Sensors	
Pyrometer	1 no.
Encoder	1 nos. of each type
Limit switches	1 of each type & size.
Proximity switches	2 of each type & size.

© 2022 MECON LIMITED. All rights reserved

Description	Qty
Photocells	1 of each type & size
Other Sensors	1 of each type & size

10.07.16 The List minimum drawings /documents shall be given by bidder with offer

10.07.16.01 Operation & Maintenance Spares for Two Years

The bidder shall submit two years of operational & maintenance spares list for electrics and automation system along with the offer by the bidder.

10.07.16.02 Plant Layout with ECRs, Control Pulpits, Cabletunnel/trench:

Plant layout indicating Nos. of Electrical Control Room (ECR) with indicative dimension, Nos. of control Pulpits with indicative dimension, Cable tunnel & trench interconnecting above all, shall be submitted along with the offer by the bidder.

10.07.16.03 Motor & Component List

The Motor & Component List along with all details of the Furnaces cum Casters shall be submitted along with the offer by the bidder.

10.07.16.04 Power Single Line Diagram

Power single line diagram along with, nos. of 11kV feeders required and all details of the plant shall be submitted along with the offer by the bidder.

10.07.16.05 Automation Configuration Diagram

Automation Configuration Diagramarea wise requirement of Level # 0, level # 1, and level # 2, interconnection with external and internal communicationas per plant requirementalong with all details shall be submitted along with the offer by the bidder.

10.07.17 Scope Division/Split-up List

For detailed division list for electrical, automation &

© 2022 MECON LIMITED. All rights reserved

telecommunication given below:

The scope of supply of equipment and services, their limits and responsibility of all parties involved in the project are described in the scope of supply list.

Legend of Abbreviations:

P: Purchaser

T: Electrical Tenderer

BD: Basic Data

BE: Basic Engineering

DE: Detailed Engineering

SUP: Supply

INS: Installation

COM: Commissioning

Commissioning indicated as "T" shall be done by Electrical Supplier with the assistance of trained customer personnel

MCL: Motors & components list

Basic Data

The activities defined as basic data are carried out by the party as defined in the project structure and engineering split up list. These activities are:

- Determination of plant data (e.g. technological limit values, limit values for the drives)
- Cooling of basic data for the equipment (e.g. consumption data for active and reactive power, cooling water, air, lubrication, heat losses)
- Preliminary layouts and arrangement of electrical rooms, pulpits and operating panels

Basic Engineering

- Single lines for energy supply, drives, auxiliaries
- Specification of motors
- Preliminary layout drawings for electrical rooms.

© 2022 MECON LIMITED. All rights reserved

- Specification of plant parameters, documentation, automation and drive configuration designation system
- Determination of plant regulations, applicable standards
- Specification of main equipment / type, color
- Specification of engineering and software tools
- Setting out guidelines and schedules for detailed engineering
- Defining operator interfaces and procedures

Detailed Engineering

After the BD & BE have been approved by the Consultant & Buyer, the detailed engineering can begin. The goal of the detailed engineering is to provide completed documentation, equipment and software for installation and commissioning at the Buyer's plant such as

- Cable lists and circuit diagram
- Typical arrangement drawings for installation
- Cable routing single lines
- Equipment drawings for construction of electrical units (e.g. cubicles, terminal boxes, racks)
- Ordering of equipment, ordering data
- Software programming and testing
- Design and manufacture of control desk and panels
- As-delivered documentation including function descriptions, operator procedures
- Installation and commissioning schedule
- Delivery and shipping schedules

Scope Matrix Division

Item	Description	Engineering			Equip Supp	Erection		Commission		Remarks
		BD	BE	DE		Work	Supervision	Work	Supervision	
1	**Energy Supply**									

© 2022 MECON LIMITED. All rights reserved

Item	Description	Engineering			Equip Supp	Erection		Commission		Remarks
		BD	BE	DE		Work	Supervision	Work	Supervision	
1.1	**MV-Distribution**									
	132 kV / 11 kV transformer	T/P	P	P	P	P	P	P	P	
	11 kV Switchgear	T/P	P	P	P	P	P	P	P	Bidder's TOP is outgoing terminal of 11 KV switchgear
	VCB with protection features before converter transformer	T	T	T	T	T	T	T	T	
	VCB without protection features before distribution transformer for Auxiliary load of Technological equipments	T	T	T	T	T	T	T	T	
	11 kV / 415V or 690V transformer for power supply to Bidder's equipment	T	T	T	T	T	T	T	T	
	11 kV / 415V transformer for power supply to Plant Auxiliary systems	P/T	P/T	P	P	P	P	P	P	For power supply to cranes, Hoist, Transfer car, ventilation, AC, lighting, power sockets, etc
	11 kV / 415V transformer for power supply to Technological Equipment Auxiliary systems	T	T	T	T	T	T	T	T	
1.2	**LV-Distribution**									
	415V Load Center Sub Stations (LCSS) for power supply to Bidder's equipment	T	T	T	T	T	T	T		
	415V Load Center Sub Stations (LCSS) for power supply to Plant Auxiliary systems	P/T	P/T	P	P	P	P	P		For power supply to cranes, Hoist, Transfer car, ventilation, AC, lighting, power sockets, etc as per TS
1.3	**Compensation System**									
	Power Factor Compensation & Harmonic Filter Equipment 11 kV	T	T	P	P	P	P	P		provision shall be kept by Bidder
1.4	**Emergency Power Supply**									
	Uninterruptible Power Supply	T	T	T	T	T	T	T	T	
	AC Distribution for UPS power	T	T	T	T	T	T	T	T	

© 2022 MECON LIMITED. All rights reserved

Item	Description	Engineering			Equip Supp	Erection		Commission		Remarks
		BD	BE	DE		Work	Supervision	Work	Supervision	
	Supply									
	Emergency Power (Diesel)	T	P	P	P	P	P	P	P	
1.5	Consumption Monitoring for Energy supply	T	T	T	T	T	T	T	T	Communicable Multi Function meters for Buyer's scope of Board by Buyer
2.1	**LV Variable Speed Drive System**									
	LV AC VVVF motors	T	T	T	T	T	T	T		
	LV AC power supply for drives	T	T	T	T	T	T	T		
2.2	**Constant Speed Drive System**									
	AC fixed speed motors (standard)	T	T	T	T	T	T	T		
	MCC	T	T	T	T	T	T	T		
	AC fixed speed gear-motors	T	T	T	T	T	T	T		
3	**Automation System**									
3.1	Basic Automation System (Level-1)									
	Basic automation Hardware	T	T	T	T	T	T	T		Amount of I/Os to be included in MCL
	Basic automation software	T	T	T	T	T	T	T		Electromechanical functional description
	E-stop system	T	T	T	T	T	T	T		Definition of E-stop areas according to mechanical functionality.
	Interface to other system including switches, repeaters, media etc	T	T/P	T/P	T	T	T /P	T/P		
3.2	**Process Control System Level-2 (SCADA Control system)**									
	Process Control System Level-2 Hardware	T	T	T	T	T	T	T		
	Process Control System Level-2 Software including Mathematical models	T	T	T	T	T	T	T		
	Diagnostic for Fault Analysis	T	T	T	T	T	T	T		
	Interface to Level-3, Furnace, WTP, N2, Compressor including switches, repeaters, media etc	T	T	-	-	-	-	-		
3.3	**Electrics and Automation system (up to Level – 2) shall be compatible to adopt with Industry 4.0 at later date (Optional)**	T	T	T	T	T	T	T		

© 2022 MECON LIMITED. All rights reserved

Item	Description	Engineering			Equip Supp	Erection		Commission		Remarks
		BD	BE	DE		Work	Supervision	Work	Supervision	
3.4	**Measurement Equipment**									
	Sensors (Position & Pressure Transducers, Limit Switches, Pulse Generators, Proximity Switches, etc)	T	T	T	T	T	T	T		
	Fixing brackets for Sensors on Shop Floor	T	T	T	T	T	T	T		
	Piping for Instrument Air & Cooling Water including Valves, Pressure Switches etc									
	Piping for electrics to the Equipment from TOP	T	T	T	T	T	T	T		
3.5	**HMI System**									
	Operator station (VDU)	T	T	T	T	T	T	T		
	S/W development systems	T	T	T	T	T	T	T		
3.6	**Control Desks/ Pulpits**									
	Control Desks	T	T	T	T	T	T	T		
	Local Control Boxes for Aux system operation	T	T	T	T	T	T	T		
	Pulpit Cabin	T	T	T/P	P	P	P	P		T for location, Layout, Line of Sight, Floor cut out details
	False Floors & False Ceiling for Pulpits	P/T	P/T	P	P	P	P	P		T for Floor load data, Location, Layout, Floor cut out details
	ECR & Pulpit Furniture	T/P	P	P	P	P	P	P		T for BOQ & Specification
3.7	**Ethernet Network**									
	Plant wide network (backbone to connect HSM network)	T/P	P	P	P	P	P	P		Connection of individual areas (e.g. melting plant, caster, HSM, roll shop etc) to each other
	Level-1, Level-2 & Field Bus Network for plant Automation System	T/P	T	T	T	T	T	T		
4	**Additional systems**									
4.1	**Ventilation & Air Conditioning**									
	Electrical Control Rooms	T	P	P	P	P	P	P		

© 2022 MECON LIMITED. All rights reserved

Item	Description	Engineering			Equip Supp	Erection		Commission		Remarks
		BD	BE	DE		Work	Supervision	Work	Supervision	
	Control pulpits / cabins	T	P	P	P	P	P	P		
	Buildings, transformer room	T	P	P	P	P	P	P		
4.2	**Voice Communication System**									
	Loud Speaker Intercom System	T	P	P	P	P	P	P		
	VHF/Crane communication	T	P	P	P	P	P	P		
	Telephone system	P	P	P	P	P	P	P		
4.3	**Industrial IP BASED CCTV**	T	P	P	P	P	P	P		
4.4	**Fire Detection and Alarm (FDA) System**	T	P	P	P	P	P	P		
4.5	**Cables**									
	MV Power supply cables from 11KV Switch Boards	T	T	T	T	T	T	T		
	LV Power Cables	T	T	T	T	T	T	T		
	LV Control Cables	T	T	T	T	T	T	T		
	Special Cables including Communication Cables, Flexible cables etc	T	T	T	T	T	T	T		
	Cable Reeling Drum, Drag Chain etc including their flexible cable	T	T	T	T	T	T	T		
	Cable trays fixed on equipment	T	T	T	T	T	T	T		
4.6	**Installation material**									
	For cabling	T	T	T	T	T	T	T	-	
	Guards, covers and other protective cover for electrical equipment/ sensor	T	T	T	T	T	T	-		
	Embedded steel work, foundation rails, bolts and structures for electrical equipment and sensors	T	T	T	T	T	T	T	-	1) Engineering scope as per attached list
	Embedded conduits	T	T	P	P	P	P	P		
	False floors for electrical rooms and computer rooms	T	T	T	P	P	T	P	-	T for Floor load data, Location, Layout, Floor cut out details
	Any pre-wiring of Package units such as valve stands, hydraulic stations, Circulating Oil Station etc	T	T	T	T	T	T	T	T	
	Supply of water and electric power for construction purposes	T	T	T	T	T	T	T		
	Terminal & junction boxes on plant Equipment	T	T	T	T	T	T	T		T* incl. indication of location in drawings provided by technologist

© 2022 MECON LIMITED. All rights reserved

Item	Description	Engineering			Equip Supp	Erection		Commission		Remarks
		BD	BE	DE		Work	Supervision	Work	Supervision	
	Other terminal and junction boxes on Shop Floor	T	T	T	T	T	T	T		T* incl. indication of location in drawings provided by technologist
4.7	**Tools and instruments**									
	Special tools & instruments	T	T	T	T					
4.8	**Lighting & Power Outlets**	T/P	P	P	P	P	P	P		
	Special lights required for any equipment/system	T	T	T	T	T	T	T		
	Search & Signaling system including rotating flash lights and sirens at strategic locations e.g. top of pulpit, plant housing structure.	T	T	T	T	T	T	T		
4.9	**Earthing System**									
	Primary Earthing	T	T	P	P	P	P	P		
	Secondary Earthing	T	T	T	T	T	T	T		
	Electronic Earthing	T	T	T	T	T	T	T		
4.10	**Illumination/Lighting system**	P	P	P	P	P	P	P		
4.10	**Cranes / Hoists/Transfer Cars**	T	T	P	P	P	P	P		
4.11	**Water Treatment Plant (Electrical Equipment)**	T/P	T/P	P	P	P	P	P		
5.1	**Training**									
	Classroom training				T					
	System / maintenance training				T					
	On-site training				T					
5.2	**Installation / inst. Supervision**									
	Installation engineering (electrical)	T	T	T						
	Installation work & wire termination	T	T	T	T	T	T	T		
	Cable engineering	T	T	T	T	T	T	T		
	Civil work electrical rooms	T	T	P	P	P	P	P		
	Civil work other buildings	P	P	P	P	P	P	P		BD & BE shall be seller scope
5.3	**Commissioning**						T			See column "COM" of each item
6	**Spare parts**									
	Commissioning spares				T					
	Operation / maintenance spares				T					
7.	BE, DE, Vendor drawing/data					-	-	-	-	Nos. of set in

© 2022 MECON LIMITED. All rights reserved

Item	Description	Engineering			Equip Supp	Erection		Commission		Remarks
		BD	BE	DE		Work	Supervision	Work	Supervision	
	sheet, As Built Drawing, Maintenance & operation Manual, catalog etc list.	T	T	T	T					hard copy & soft copy shall be decided in Kick off meeting.

© 2022 MECON LIMITED. All rights reserved

10.08 INSTRUMENTATION

10.08.01 General:

1) Instrumentation facilities for the plants shall be as required for reliable, efficient, safe and trouble-free operation of the plant and equipment. Any equipment / accessories not explicitly indicated in this specification, but essential for proper functioning of technological equipment and process shall be included by Tenderer in its scope of work and supply. The complete instrumentation of this package shall be executed on turnkey basis by successful tenderer.

2) Instrumentation system shall be based on 4-20 mA DC signal system. Field transmitters and control-valve-positioners shall be HART® protocol enabled (HART® = Highway Addressable Remote Transducer). Other equipment shall also be HART®-enabled / compatible, to the extent possible.

3) Monitoring, control, alarm & interlock functions of the process & equipment of the melting furnaces, holding furnaces and caster units along with their auxiliaries shall be achieved through a PLC-based automation system, to be housed in an air-conditioned control room. The automation system shall be common for both instrumentation & electrical facilities of the plant units. Further details and specifications of the automation system and control room have been indicated under Electrical chapter.

4) **All analogue input & output (I/O) modules in the PLC required for interfacing of instrumentation equipment shall be HART®-compatible. Additionally, all standard HART® status, diagnostic, remote-configuration & troubleshooting features shall be available in the PLC to facilitate automatic health-monitoring of HART®-based field equipment.**

5) Instrumentation primary power-supply shall be 240V AC, to be obtained from a UPS. Requirements and specifications of the UPS

© 2022 MECON LIMITED. All rights reserved

are covered under Electrical chapter. 24V DC power supply required for any instrumentation equipment shall be derived from the UPS power.

6) Control-valves shall be pneumatically-actuated type. For this, instrument-grade air shall be made available by Employer through pipe header running along the building column in one axis of the complex (to be decided with the successful bidder) at a height about 7 meter from shop floor level. Taping from the header will be provided at suitable location (to be decided with bidder) with one isolation valve at 2 meter height. Further distribution of instrument air to respective pneumatic consumers, including supply of all necessary hardware / accessories, is in scope of Tenderer.

7) Earthing of instrumentation-related signal system, including earthing of drain-wire of screened (instrumentation) cables shall be done in a dedicated Electronic Earth grid for the PLC. However, in case any equipment (such as magnetic flowmeters) require independent earthing, same shall be provided by Tenderer.

8) During design of the furnace, care shall be taken so that all instrumentation-related field equipment, accessories and junction-boxes are installed at man-height from the floor level, or are easily approachable for ease of maintenance. Instrumentation equipment and control valves shall not be installed on the furnace roof.

9) All instrumentation equipment shall be from latest product ranges of manufacturers selected from the List of Approved Makes in General Technical Specification (GTS). Features and specifications of the equipment shall be in compliance with GTS.

10) Successful Tenderer shall co-ordinate with, and extend any necessary assistance to Employer's other agencies, as may be required for smooth execution and operation of the complete plant and process.

© 2022 MECON LIMITED. All rights reserved

11) All correspondences / documents shall be in English language and for all the data, drawings & documentation metric or SI units shall be followed.

10.08.02 Scope of Work and Supply:

Tenderer's scope of work and supply shall include design & engineering; manufacture / procurement; assembly; calibration; shop-testing; inspection; painting; packing; transportation to site (including loading, unloading); storage & handling; site-fabrication; erection, testing and commissioning of the complete instrumentation system of the package, as required for completeness of the system in all respects.

The scope of work and supply shall include but not be limited to the following:

a) Instrumentation equipment as per list covered under clause no.10.08.03.

b) PLC-based automation system for the furnaces and casters, as per requirements indicated under Electrical chapter.

c) Signal & power cables; extension / compensating cables; any other types of cables as required for this package.

d) Fully wired cabinets, transmitter cabinets, junction boxes, etc., as required.

e) Instrumentation power supply equipment and other required electrical accessories.

f) Impulse lines, isolation valves, air-filter-regulators, pipe-fittings, cable-trays, conduits, structural steel, erection hardware & accessories, canopies (for protection of exposed field instruments), etc. as required for this package.

g) One portable HART Communicator - for configuration and diagnosis of HART-enabled transmitters and equipment.

© 2022 MECON LIMITED. All rights reserved

h) Approach arrangement, maintenance platforms, ladders, etc. as may be required for reasonable maintenance access to instrumentation items or tapping points.

i) Preparation of separate (dedicated) earth-pit, if required for any instrumentation equipment, including supply of earthing materials including cables.

j) Arranging & participation in inspection of instrumentation equipment at manufacturers' / Tenderer's premises.

k) Submission of drawings and documents as per clause no. 10.03.04.

l) Erection, testing and commissioning of individual instrumentation equipment and complete instrumentation system.

Successful Tenderer shall arrange all tools, tackles and consumables required for the aforesaid activities.

m) Arranging visits of equipment manufacturer's specialists to site for erection supervision, troubleshooting, etc., as and when required, during erection & commissioning.

n) Supply of all instrumentation-related spares and consumables required upto commissioning, and thereafter upto hand-over of the finished plant to Purchaser.

o) Any tools, tackles, instruments or calibration equipment required for erection, testing, commissioning of the instrumentation equipment and till handing over of the plant to Purchaser shall be brought to site by Tenderer on returnable basis.

p) Supply of two years' operation & maintenance spares for instrumentation, if order is separately placed by Purchaser.

Tenderer shall submit a proposed list of two years' operation & maintenance spares for instrumentation, cost of which shall be indicated separately from the main price in its offer.

© 2022 MECON LIMITED. All rights reserved

10.08.03 List of Measurements, Controls, Alarms & Interlocks:

A) Melting Furnace / Holding Furnace:

An indicative list of measurements, controls, alarms & interlocks in the scope of Tenderer for each Furnace is provided below. However, in case any other measurements, controls, alarms or interlocks are required for efficient and satisfactory operation of the process & equipment, the same shall be included by Tenderer in its scope, and also highlighted in the Tenderer's offer.

1) Measurement of pressure of combustion air to each burner. Based on this measurement, safety shut-off valve on fuel-oil line to respective burners shall be closed in case of low combustion air pressure.

2) Measurement of temperature of combustion air at header.

3) Measurement of flow of combustion air to each burner. The flow values shall be pressure & temperature compensated.

4) Measurement of pressure of fuel oil to each burner. Based on this measurement, safety shut-off valve on fuel-oil line to respective burners shall be closed in case of low fuel-oil pressure.

5) Measurement of temperature of fuel oil at header.

6) Measurement of flow of fuel oil.

7) Measurement of furnace bath temperature in each furnace using thermocouples. Thermocouple shall be with thermowell of durable material suitable for the application.

8) Measurement of furnace roof temperature using thermocouples.

9) The bath & roof temperature signals from each furnace shall be interfaced with the caster automation system for coordinated operation of both furnace & caster units.

10) Control of furnace temperature by regulating flow of combustion air and fuel oil to each burner of the furnace in required mixing ratio. Fuel-oil flow shall be measured using mass flowmeter, and shall be totalised.

© 2022 MECON LIMITED. All rights reserved

Controlled variable for furnace temperature shall be either bath temperature or roof temperature, depending operational philosophy.

Number and location of thermocouples (bath / roof) and their insertion mechanism shall be as per Tenderer's system design.

11) Shut-off valves in oil line to respective burners: fuel lines shall be shut-off, based on furnace temperature / process requirement.

12) Sensing of flame in burners (using ultraviolet flame detectors / any other proven method) along with required alarm & interlocks.

13) Measurement of flow of atomising air in header.

14) Measurement of pressure of atomising air to each burner.

15) Instrumentation equipment required for protection, alarm & interlocking of combustion-air fan and atomising-air blower shall also be provided, as applicable.

16) Measurement of pressure of furnace and pressure control by regulating damper in the flue gas duct.

17) Measurement of temperature of flue gas from each furnace.

18) Continuous emission monitoring [SO_2, NO_x, suspended particulate matter (SPM), draft, flow, pressure, temperature, O_2 (for dry-oxygen correction of SO_2, NOx & SPM data), any other required measurements] in chimney, as mandated in the latest Guidelines of the Central Pollution Control Board (CPCB) and / or State Pollution Control Board (SPCB). Facility for direct uploading of the monitored parameters to the server of the CPCB) / SPCB and for remote calibration of the analysers from CPCB / SPCB shall also be provided. All other requirements as per latest recommendation of the CPCB as on the date of the plant commissioning shall be complied by the Tenderer.

Further, Bidder shall design its furnace control philosophy so that signals from these monitoring systems / analysers are used for better control of furnace combustion system.

© 2022 MECON LIMITED. All rights reserved

19) Continuous measurement of launder-level signal for executing furnace tilting system. Launder-level shall be measured using laser-based molten-metal level sensor ('Precimeter' make).

20) Measurement and control of furnace tilt to maintain desired level of liquid aluminium in launder between each furnace and caster. Tenderer shall supply tilt-angle feedback transmitter ('Precimeter' make).

21) Local pressure gauges & switches at outlet of oil pumps, with necessary alarm & interlock.

22) Local pressure gauges & switches at outlet of combustion-air / atomising air blowers / fans, with necessary alarm & interlock.

23) Pressure, temperature and flow measurement at the battery limit for all utilities (like instrument-air, compressed air, water, etc.).

24) Any other instrumentation equipment required for efficient and safe operation of the furnaces and their auxiliaries.

B) Caster:

An indicative list of measurements, controls, alarms & interlocks in the scope of Tenderer for <u>each</u> caster is provided below. However, in case any other measurements, controls, alarms or interlocks are required for efficient and satisfactory operation of the process & equipment, the same shall be included by Tenderer in its scope, and also highlighted in the Tenderer's offer.

1) Measurement of casting rate & its regulation including control of liquid metal pouring to caster. Caster drive parameters including casting speed shall also be monitored.

2) Measurement of liquid metal temperature at inlet to caster.

In case thermocouple is used for this application, thermowell material shall be selected for obtaining best possible life-span. Temperature transmitter shall preferably be used for the measurement loop.

© 2022 MECON LIMITED. All rights reserved

Additionally, a digital indicator installed on a wall mounted cabinet shall also be provided at the local level for the temperature measurement loop.

3) Measurement and control of flow of cooling water to each cooling zone of the caster using electromagnetic flowmeter and control valve. Water flow rates as required for different product grades shall be set in the automation system and controlled accordingly.

4) Measurement of temperature of cooling water at inlet & outlet of each cooling zone of the caster.

5) Measurement of pressure at inlet & outlet cooling water line of each cooling zone of the caster.

6) Pressure gauge at each cooling water line of the caster.

7) Measurement of differential pressure across heat exchanger.

8) Pressure & temperature gauges at inlet & outlet lines of heat exchanger for the water being cooled and for the water used for cooling.

9) Measurement of flow of nitrogen at inlet line to the degasser. The flow shall be pressure & temperature compensated. Pressure transmitter & temperature element / transmitter shall be provided in the nitrogen line for monitoring as well as for flow compensation.

10) All required instrumentation facilities for the degasser unit, such as bath temperature measurement; heating element temperature measurement & its control, etc. All instrumentation signals shall also be interfaced with the caster automation system.

11) Measurement of casting wheel ring mould temperature for verifying proper heating of the mould before casting.

12) Measurement of temperature of cast product at outlet of caster.

In case pyrometers are used for the measurements at sl. nos. 11 & 12 above, these shall be with all required purging and cooling facilities as per their operational requirement.

13) Any other measurement required for efficient and safe operation of the caster & auxiliaries.

© 2022 MECON LIMITED. All rights reserved

10.08.04 Submission of Drawing & Documents:

The following is a list of drawings and documents to be submitted by the Tenderer as minimum:

A) <u>To be submitted along with offer:</u>

1) Signed copy of TS as confirmation that Tenderer is agreeable to all the clauses of this chapter, and in particular, to the List of measurements, controls, alarms & interlocks in clause no. 10.03.03.
2) Any other measurements, controls, alarms or interlocks felt necessary by Tenderer for completeness of work or for satisfactory operation of the plant and process shall also be highlighted by Tenderer.
3) Instrument-air requirement for the project.
4) List of two years' operation & maintenance spares pertaining to Instrumentation & Automation, with details & unit-rates.

B) <u>To be submitted by the Successful Tenderer :</u>

I. <u>For Approval:</u>

1) Process and instrumentation (P&I) diagram indicating all measurements, controls, alarms and interlock functions at field and control room, using instrumentation symbols & identification in conformance with ISA-5.1-1984, or any other instrumentation symbol & identification system (enumerated clearly in the drawing).
2) Detailed specification datasheet for each instrumentation item, with finalised (single) make and complete model-number.

© 2022 MECON LIMITED. All rights reserved

Technical literature for the selected model number of equipment shall be submitted in soft-copy to enable scrutiny of the datasheets.

3) General arrangement drawings & sectional views of all cabinets showing external & internal disposition of all equipment, with dimensional details and bill of materials, if applicable.

4) Single-line power supply diagrams for instrumentation and automation with bill-of-materials of electrical items and accessories.

II. For Scrutiny and Reference:

1) Control philosophy for the plant and equipment.

2) Instrumentation cable schedule and specification.

3) Internal-wiring diagrams of cabinets, if applicable.

4) Instrumentation loop diagrams showing termination details of signals from instrumentation equipment upto field junction-boxes and then upto PLC marshalling racks.

5) Sizing calculation for flow elements, control valves, actuators, and any other items required to be sized; stroking time calculation for control valves with actuators; along with all related charts, curves, tables, etc.

6) Fabrication drawings for orifice-plate assemblies, special thermocouple assemblies (e.g., installed in furnace), thermowells, control valves, and any other fabricated items, as applicable.

7) Instrument Installation / hook-up diagrams.

8) Instrumentation layout drawings showing location of instruments and route of cables from sensors/ primary elements up to field junction boxes and control room.

9) Instrument air distribution scheme with bill of quantities.

© 2022 MECON LIMITED. All rights reserved

10) List of instrumentation equipment indicating tag number, application / service, finalised make, model number, scale range & quantity.

III. <u>After Commissioning & Before Plant Handover:</u>

1) 'As-built' drawings and documentation.

2) Soft copy of all the above drawings & documents in DVD or any other storage media.

© 2022 MECON LIMITED. All rights reserved

10.09 Quality Control Facilities

The melting and casting plant shall produce high quality aluminium hard alloy slabs & billets as per the quality standards. Quality assurance shall be implemented effectively in the form of analyses and test results by operation.

To carry out the day-to-day quality control operations, to render assistance at various stages of production and to ensure proper quality of products, a laboratory with modern state-of-the-art equipment to be established to cater to the quality assurance needs of the melting and casting plant. As the plant is going to produce different Aluminium grades intended for aero, defence, space and other critical applications, the quality control measures to be effectively adopted to meet the end use application.

Following functions are considered essential for melting and casting area:

- Analysis of raw materials (Al ingot, master alloy, etc.) & intermediate products
- Analysis of molten metal and dross from furnace units
- Collection and preparation of test samples

Laboratory facilities is excluded from scope of tenderer. However, tenderer to provide the following information.

- Tests required along with the applicable National / International standard to conduct the analysis
- Laboratory equipment list with quantity along with detailed technical specification of the equipments
- Make [Original equipment manufacturer] list of the laboratory equipment, preferably from Indian sources
- Tentative equipment layout of the laboratory

© 2022 MECON LIMITED. All rights reserved

- A write-up on standard operating procedure of laboratory indicating the tests, sampling point, frequency of testing, duration of test, etc.
- Sampling procedure for preparation of test sample and sample transportation method
- Certification agency and procedure for certification of the laboratory equipment as per international standards for space, aero, defence and commercial application for the products aimed in the product-mix.
- Any other item required for completeness and designing of laboratory facility

© 2022 MECON LIMITED. All rights reserved

10.10 Fire Protection system

Complete fire protection system for the Aluminium Melting & Casting Facilities shall be provided by Purchaser. The package #1 bidder has to provide all basic engineering data required for designing the fire protection system and suggest the schemes usually adopted for such plant emphasizing on fire prone areas and volume of hazardous item. If any specific feature is to be adopted/in-built in latest process line equipment, same shall be considered by the bidder indicating the advantages of using such special feature in the offered equipment in context to fire protection.

© 2022 MECON LIMITED. All rights reserved

10.11 Pollution Control

10.11.01 Two number (1 no. for melting furnaces and 1 no. for holding furnaces) of fully refractory lined steel stacks of adequate height (minimum 35m) with a provision of gas sampling facility and approach to the gas sampling point. The height of the stack shall be as per latest pollution control norms/ CPCB regulations.

The stack will be lined as described under various chapters of the TS namely Chapter 10.01.1.A, 10.01.1.B, 10.03 and 10.08.

10.11.02 Steam generated during casting process shall be exhausted through the centrifugal exhaust fans to the atmosphere above the building roof.

10.11.03 The fine aluminium chips generated at the slab sawing & scalping area shall be collected in chips collection bin and send to a chips compactor which shall be able to keep the different alloys separated and eliminate the undesired standstills.

10.11.04 Tenderer shall indicate whether the amount of fumes generated from various stages of operation need any precaution / care against environment pollution, in that case the facilities to be included in Tenderer's scope.

© 2022 MECON LIMITED. All rights reserved

10.12 Hydraulics and Lubrication System

10.12.01 Hydraulic Tilting System for Melting & Holding Furnaces

Each furnace will be tilted with the help of 2 nos. hydraulic cylinders and positioned around floor level at each side of the charge door. The cylinders will be double acting and will be connected via front rod and mountings (clevis) incorporating bushes to a hard shaft supported on fabricated mild steel structures bolted to the floor. The cylinders will be connected to the furnace lift beam via front trunnion mounting on barrel incorporating bushes on shafts. The furnace shall be suitably reinforced in this area.

Separate hydraulic power pack shall be provided for the envisaged 3 (three) nos. melting furnaces and 2 (two) nos. holding furnaces.

The hydraulic system will be suitable for use with fire resistant synthetic hydraulic fluid confirming to IS 7895 of1975. Viscosity grade-68 based on synthetic organic easter without any water content, phosphate easter and chlorinated hydro-carbon.

Tenderer scope of supply would include first fill of hydraulic fluid and required top up for successful commissioning.

Tilting of the furnaces will be suitably adjustable so as to get a metal flow rate of 10t/h maximum casting speed.

A safe system for descending the furnaces automatically in the event of failure of electrical power will be provided by the tenderer. During normal operation, provision shall be made for cushioning when the furnaces are brought to rest from tilted positions.

Besides above, provision of an emergency switch shall be made which shall restrict the automatic coming back of the furnaces to its rest position from tilted condition in case of power failure during maintenance of the furnace in tilted condition.

The furnace tilting system will work in conjunction with the launder level control system.

© 2022 MECON LIMITED. All rights reserved

The hydraulic system will have the following features:-

a) For achieving the rated flow rate as per the requirement of caster, provision for slow rate of tilt and fast rate of tilt shall be made in the holding furnaces.

b) Tilt speed will be controlled by a motorized oil flow control valve through the signal available from caster PLC. In order to achieve the desired flow rate of liquid metal, the control of tilt speed shall be affected normally on one furnace at a time. But the provision shall exist for simultaneous tilt of 2 nos. furnaces (melting furnaces) for a short duration, say 5 minutes. The controller for furnace tilting shall form a part of scope of supply.

c) A hydraulic oil flow meter (mass flow meter) for each furnace will also be provided for interaction with the Caster PLC.

d) The tilt cylinders will be suitably located.

e) Furnace over tilting limit switch to be provided.

f) Instruments for furnace tilting to be provided for controlled tilting.

Detailed Description of Hydraulic System:

1. SCOPE OF WORK

- Supply, erection and commissioning of New Hydraulic Systems
- Portable oil filling unit along with oil filtration facility
- First fill
- Spares

2. DESIGN CONSIDERATION

All the components of Hydraulic system shall be designed, manufactured, assembled and tested in accordance with the latest IS, IPSS & IEC Indian Boiler act or Pressurized vessel act standards wherever applicable. In case of the items where above suitable standards are not available / applicable, these shall be

© 2022 MECON LIMITED. All rights reserved

according to general accepted codes, practices and international standards.

All electrical equipment / component of Hydraulic system shall conform to latest Indian Electricity Regulations as regards to safety, earthing and other provisions.

3. TECHNICAL REQUIREMENT

The hydraulic system shall consist of the following major components duly piped up.

- Oil Reservoir.
- Return filter shall be duplex type and Pressure filter shall be simplex type of required micron rating. All filters shall be equipped with mechanical & electrical clogging indicators.
- Pressure filters at the pump discharge.
- Offline recirculating cooling & filtering system.
- Variable flow, pressure compensated axial piston pump.
- Bladder accumulators / Piston accumulators with Nitrogen bottles.
- Valve stands with manifold & Control valves.
- Valve stand Electric panel complete with amplifier cards, switches, push buttons, lights, in enclosure.
- Electric Junction box.
- Control instruments and indicating instruments.
- Interconnecting pipelines.

The scope of work covers design, manufacture, cleaning, assembly, testing, painting, packing and supply as per following technical specification.

Tank Unit

The oil tank shall be of minimum 8 times the pump capacity and of SS material.

Tank of suitable dimension, shall be of welded steel construction, fabrication using 6 mm thick (minimum) steel plate, test certificates of same should be submitted, and provided with structural reinforcement on outside surface.

© 2022 MECON LIMITED. All rights reserved

Tank shall be equipped with level gauge cum level switch, temperature gauge, heater, air breathers, thermostat, manhole cover, sampling and drain valve etc.

Pumping Unit

This unit shall consist of variable delivery, pressure compensated axial piston pump (The no. of standby pumping unit shall be either 50% of working pumping units or 2 whichever is less) of adequate capacity complete with suction and delivery flanges driven by 1450 rpm suitable electric motor, relief valves, pressure gauge, pressure filter of 10 micron rating ($\beta_{10} \geq 200$) filter element suitable for system pressure with electrical & mechanical clogging indicator (The system with servo valves shall have pressure filter of 3 micron rating $\beta_3 \geq 200$), pressure switches, return line duplex filter with mechanical & electrical clogging indicator etc.

Recirculating Cooling & Filtering Arrangement

The unit shall consist of screw pump with built in adjustable relief valve of suitable capacity driven by electrical motor of suitable capacity of 1450 RPM and coupled with flexible coupling, duplex filter with mechanical & electrical clogging indicator (Degree of filtration shall be 10 micron and system with servo valves the degree shall be 3 micron rating), plate type heat exchanger (Complete with regulating valve, basket strainer, pressure gauge)

Accumulator Stand

Bladder Accumulators of suitable capacity in requisite numbers, rated for system pressure along with safety shut off block and Nitrogen charging and gauging assembly and piped up to make accumulator stand.

Alternatively piston accumulators of required capacities and required Nitrogen bottles, mounted on a common stand, completely piped up.

© 2022 MECON LIMITED. All rights reserved

Valve Stands

The valve stand shall primarily consist of various types of control valves mounted on manifold blocks. Material of manifold block shall be forged steel / GGG 40. All the electrical connections shall be wired to a common junction box mounted on each valve stand.

The valve stands of adequate dimension shall be of manifold construction and shall be "table type".

Portable Filter Pump Unit

This unit shall be complete with motorised pump and filter suction and delivery hoses to fill the oil in the system tank from oil barrels.

Spares

List of commissioning spares shall be provided. Commissioning spares shall be supplied with the systems and it shall be part of the supply. Any spares required during commissioning shall be under scope of tenderer irrespective whether it appears in the commissioning spares list or not. List of recommended spares for 2 years of operation shall also be provided. A separate price for these 2 years spares shall be indicated.

Initial fill

Scope of supply shall include First fill of hydraulic oil in required quantity.

Interconnecting piping

Interconnecting piping shall be of Stainless steel. All necessary interconnecting piping between various units i.e. tank, accumulator stand, pumping unit and valve stands and between valve stands and equipment shall be provided. The interconnecting piping shall consist of high pressure hoses, pipes/tubes, welded nipple type with O-ring type fittings, SAE

© 2022 MECON LIMITED. All rights reserved

four bolt flanges, heavy duty PP clamps, etc as detailed out in general notes. EO tubes with ferrol fittings shall be used.

4. GENERAL INSTRUCTIONS

a) All the pipes / tubes , fittings etc. of hydraulic systems shall be seamless stainless conforming to DIN / ANSI standards.
b) All terminations shall be terminated by mating flanges / fittings suitable for incoming / outgoing pipe sizes. One end of the P-T-L headers in valves stands shall be provided with mating flange and other end with blind flanges.
c) All pressure switches and pressure gauges shall be connected by hose and minimises coupling.
d) High pressure hoses, suitable for requisite system pressure, shall be used in the delivery of main pumps.
e) At pump suction, flexible connectors shall be used.
f) All units such as pumping unit, tank unit, accumulator stand and valve stands shall be provided with oil trays and drain valves.
g) All butt-weld joints shall be welded by TIG welding. Pipe / tube upto 38mm OD shall be completely welded by TIG and above 38mm OD shall have root welding by TIG followed by normal welding.
h) Material of manifold block shall be IS-1875CL. III- GGG-40 .Test certificates shall be submitted in this respect.
i) Direction control valves shall be selected for maximum 5 Kg/cm2 (P to A and B to T taken together) pressure drop for blind end flow.
j) Speed control valves shall be selected for maximum 5 Kg/cm2 (maximum open condition) pressure drop.
k) Shut off valves and check valves shall be of same size as that of pipelines.
l) Total pressure drop in any circuit including manifold block of valve stand, for the flow indicated for the circuit shall not exceed 15 Bar. Pressure drop shall be measured by short circuiting A & B ports by providing pressure gauges at P & T lines and measuring flow by a digital flow meter.

© 2022 MECON LIMITED. All rights reserved

m) All solenoids shall be provided with indicating lamps, wherever possible, and plug in type connectors (DIN connector). All solenoid coils to be oil immersed type and must be rated for continuous duty and they shall be epoxy coated.

All pilot operated direction control valves shall be with pilot choke arrangement.

n) All equipment shall be supplied with drives, associated electrics, instruments and control equipment, technological structures (if any), maintenance and working platforms, railing, safety guards etc.

o) Material handling facilities for maintenance of all equipment shall also be a part of supply.

p) Supply of following: -
- Complete design data,
- Design calculation,
- P & ID Drawings with BOM
- Detail engineering drawings,
- Interconnecting piping drawings
- Technical literature and documents,
- Erection and Construction drawings, manuals etc.
- Operation and maintenance manuals,
- Quality assurance plan for all equipment.
- Supply of “As Built drawings”.
- List of commissioning spares and 2 years spares
- List of special tools and tackles

q) Any other equipment / part / facility not specifically mentioned in the specification, but is necessary technically or safety point of view for the satisfactory and smooth operation of the system shall also be included in the scope of the supply of the tenderer.

r) There shall be properly identification of piping.

s) Air vents with plugs / valves shall be provided at proper places.

t) The successful tenderer shall supply complete set of all the special tools and tackles including required number of tool boxes as required for erection, maintenance, overhaul or complete replacement of the equipment and components

© 2022 MECON LIMITED. All rights reserved

required for the offered system. All the tools shall be supplied in separate containers clearly marked with the name of the equipment they are meant for.

10.12.02 Hydraulic System For other equipments

Requisite number of hydraulic system shall be envisaged for hydraulic movements of:

a) Casting machine

b) Mold table tilt system

c) Slab and Billet scalper and band sawing line.

d) Any other

The scope of work of hydraulic system shall cover design, engineering, manufacture, procurement, assembly, shop inspection, testing, painting, packing, delivery, erection, testing at site & commissioning and demonstration of performance guarantee at site of equipment of hydraulic system including piping as described later in this specification and complete in all respects along with their accessories, commissioning spares and 2 years spares for the following.

A. Hydraulic System

B. First fill (Fire resistant synthetic oil)

1.1. DESIGN CONSIDERATION

A. <u>Hydraulic system:</u>

The system will consist of following units:

- Power Unit.
- Valve Stands.
- Accumulator Stand

<u>Power unit</u>

Power unit shall consist of mainly following:

© 2022 MECON LIMITED. All rights reserved

- **Tank Unit**

Tank shall be of welded stainless steel rectangular construction and dimensions shall be proportioned as length: width: Height = 2: 1.5:1 (approx.). The tank shall be fabricated by 6-mm thick (min.) steel plate SS-304 material and provided with structural reinforcement on outside surface. Gross volume of tank shall be 20% more than the working volume. The tank shall be complete with suitable square / rectangular / circular opening with oil tight cover in each chamber of tank for efficient cleaning, sloping bottom, baffle plate separating suction & return chamber, drain valve in each chamber.

Following items shall be mounted on tank:

- Level gauge cum level switch equipped with bicolor rotating flappers and isolation valves. Provision shall be for continuous analogue 4 -20 mA output to control room for on-line monitoring of level and various alarm / tripping.
- Temperature Gauge: - One (1) direct mounting back entry type temperature gauge of 100 mm dial size, 0 100 °C range "mercury in steel" type with SS bulb &thermowell having immersion length 150 mm
- Thermostat: - One (1) thermostat of reputed make of range 10° C to 100° C and differential 3° to 24° C with remote bulb SS thermowell and 3 meter long capillary with armored covering.
- Air Breathers - Air breathers shall be 3 micron absolute rating, replaceable filter element and dehydrating chamber containing silica gel (for moisture trapping).
- Drain, sampling valves and spare valves at suitable and convenient locations.
- Clean out door
- Baffle plate

- **Pumping Unit**

Main pumping Unit: This unit shall consist of following:

© 2022 MECON LIMITED. All rights reserved

- Pumps: Requisite number of variable delivery, pressure compensated axial piston pumps (including 50% standby minimum one (1) no) of adequate capacity complete with suction and delivery flanges. Each pump shall be driven by 1450-rpm suitable electric motor. The pump shall be handling fire resistant synthetic oil. The pump shall be connected to motor by flexible coupling. Flexible connection at pump suction & hose at pump delivery shall be provided. BHP at duty point to be indicated and the Tenderer has to ensure that the motor selected has sufficient reserve kW to run pump at 125% of system pressure.

- Relief cum unloading Valves: Relief cum unloading valve with adjustable range suitable for the system to relieve at 110 % of system pressure shall be installed for each main pump.

The relief valve and check valves for each pump unit should be mounted on separate manifold.

- Pressure Gauge: - These shall be glycerin filled, heavy duty 100 mm dial size, of range suitable for system pressure, complete with bourdon movement and snubber of AISI 316 SS, in die cast aluminum alloy, moisture proof case, heavy enameled black and equipped with zero adjustment mechanism suitable for oil service.

- Pressure Transmitter: - Pressure transmitter with 4-20 mA output shall be provided for each main pump.

- Pressure Filters: - The pressure filter shall be installed at the delivery of each main pump with ß>200 filter elements, suitable for system pressure of suitable flow (not less than1.5 to 2 times of pump flow) rating at 0.8 to 1.0 Bar differential pressure (Housing + Element) in clean condition. Filter shall be provided electrical clogging indicator. The pressure line filters shall be simplex filter without bypass valve.

- Return Line Duplex Filter: - One (1) no. Duplex type (one operating and one standby) with change over valves suitable for working pressure of 10 kg/cm² with ß>200 filter elements. The filter shall be capable of handling three times the system pump

© 2022 MECON LIMITED. All rights reserved

capacity at 0.3 to 0.5 kg/cm² pressure drop (Housing + Element) in clean condition. Electrical switches shall be provided with for audio-visual alarm for filter clogging in case differential pressure exceeds 1.5 kg/cm². By- pass valve to be provided to by-pass in case differential pressure exceeds 3 kg/cm².

Recirculating unit - This unit shall consist of following: -

- Recirculation Pump: - Pump (1 W + 1 S) of screw / vane type with built in adjustable relief valve of suitable capacity for handling fire resistant synthetic oil at 10kg/cm². The pump shall be driven by electrical motor of suitable capacity of 1450 RPM and coupled with flexible coupling.
- Pressure Transmitter: - One (1) Pressure transmitter with 4-20 mA output shall be installed in delivery line.
- Recirculation Filter: - One no. of duplex filter with change over valves suitable for working pressure of 10 kg/cm² with β>200 filter elements. The filter shall be capable of handling 1.5 to 2 times of pump capacity at a pressure drop of 0.3 to 0.5 kg/cm² (Housing + Element) in clean condition. Electrical switches shall be provided with for audio-visual alarm for filter clogging in case differential pressure exceeds 1.5 kg/cm². By- pass valve to be provided to by-pass in case differential pressure exceeds 3 kg/cm.
- Cooler: - This should be PLATE TYPE HEAT EXCHANGER with following technical parameters.

Oil Flow	-	l pm
Water flow	-	To be furnished by tenderer
Oil inlet temperature	-	60 °C max.
Water inlet temperature	-	35 °C
Water temperature rise	-	3 °C max
kW to be removed	-	kW(to be furnished by tenderer)

© 2022 MECON LIMITED. All rights reserved

Heat transfer area	-	To be furnished by tenderer
Pressure drop oil side	-	0.8 bar
Pressure drop water side	-	0.2 bar
Oil inlet and outlet	-	ASA 150 class slip on flanges

Cooler shall have cooling capacity of at least 30% of installed power on unit. Cooler shall have 20% spare capacity.

- Regulating Valve: - For regulation of oil temperature, solenoid operated on -off valve suitable for water service of suitable size. Voltage 24 V DC. The solenoid shall have interlock with the thermostat mounted on the system reservoir.
- Strainer: - Y strainer of suitable size and 80µ SS screen shall be provided at water inlet.

(Note: Total pressure drop across shut off valve, Y strainer and regulating type water valve and cooler (water side) should not exceed 1.0 Bar).

All the above items are to be mounted in main power unit.

Accumulator stand

Details of emergency operations shall be furnished by bidder. Requisite nos. of accumulators of suitable capacity (preferably bladder type) and rated pressure with safety shut off block shall be supplied to successfully complete emergency operation during power failure.

Accumulator sizing calculation shall also be submitted. One no. of accumulator charging & gauging hose assembly shall also be supplied. The accumulators with safety shut off blocks shall be mounted together and piped up to make accumulator stand. Shut-off valves and other valves shall be suitable for gas service for 1.5 times the working pressure.

Note: If piston accumulator is selected then it shall be supplied with backup nitrogen bottles.

Valve stands

© 2022 MECON LIMITED. All rights reserved

The valve stands of table design and standard height consisting of all components, mounted instruments, etc. as per approved hydraulic schematic & shall be preassembled, pre-piped and prewired on a sturdy welded steel frame made out of carbon steel materials. The valve stands shall broadly comprise following: -

- Proportional Direction Control Valve complete with built in electronics and control amplifier.
- Direction Control Valve
- Pilot Operated Check Valve
- Flow Control Valve
- Control Instruments
- Minimess point for checking pressure at different points etc.

B. <u>First fill</u>

Scope of supply shall include first fill i.e. fire resistant synthetic oil in required quantity (Tank, pipeline & components) up to successful commissioning & PG. System oil should be fire resistant synthetic oil.

1.2. GENERAL INSTRUCTION TO THE TENDERERS

- Interconnecting piping i.e. pipes & fittings for hydraulic system shall be of stainless steel.
- All pipes / tubes shall be as per clause 2.05 of General Technical specification.
- All fasteners shall be of minimum 8.8 grade
- All terminations shall be terminated by mating flanges / fittings suitable for incoming /outgoing pipe sizes. One end of the P T L headers in valves stands shall be provided with companion flange and other end with blind / regular flanges.
- Shut off / Isolation valves shall be with SS internals for suction, return and drain lines. Shut off valves in pressure line of size 42 NB and above shall be provided with pressure equalising valve.

© 2022 MECON LIMITED. All rights reserved

- All pressure switches and pressure gauges shall be connected by hose and minimize coupling
- All units such as pumping unit, tank unit, accumulator stand and valve stands shall be provided with oil trays and drain valves.
- All butt-weld joints shall be welded by TIG welding. Pipe / tube up-to 38mm OD shall be completely welded by TIG and above 38 mm OD shall have root welding by TIG followed by normal welding.
- Material of manifold block shall be IS 1875CL. III GGG 40 /Forged steel. Test certificates shall be submitted in this respect.
- Shut off valves and check valves shall be of same size as that of pipelines.
- Total pressure drop in any circuit including manifold block of valve stand, for the flow indicated for the circuit shall not exceed 15 Bar. Pressure drop shall be measured by short circuiting A & B ports by providing pressure gauges at P & T lines and measuring flow by a digital flow meter.
- All solenoids shall be provided with indicating lamps, wherever possible, and plug in type connectors (DIN connector). All solenoid coils to be oil immersed type and must be rated for continuous duty and they shall be epoxy coated.
- All pipes shall be pressure tested / cleaned / flushed to get the desired cleanliness class as per the requirement of system.
- All pipelines to be clamped with polypropylene heavy series clamp at regular interval.
- Supply of following: -
  - Complete design data,
  - Design calculation,
  - P & ID Drawings with BOM
  - Basic and detail engineering drawings,

© 2022 MECON LIMITED. All rights reserved

- Interconnecting piping drawings
- Technical literature and documents,
- Erection and Construction drawings
- Erection manuals,
- Operation and maintenance manuals,
- Standard operating practices,
- Quality assurance plan for all equipment.
- Supply of "As Built drawings".

- Any other equipment / part / facility not specifically mentioned in the specification, but is necessary technically or safety point of view for the satisfactory and smooth operation of the system shall also be included in the scope of the supply of the Tenderer.
- There shall be proper identification of piping.
- The successful Tenderer shall supply complete set of all the special tools and tackles required for erection, maintenance, overhaul or complete replacement of the equipment and components required for the offered system.

1.3. INSPECTION & TESTING

- Manufacturers' Test Certificates for all bought out items e.g. Electric Motors, Coolers, Accumulators Manifold Blocks, Control Valves, Instruments, Plates for tank etc. shall be submitted for review of Inspecting Engineer.
- Valid Calibration Certificates for instruments installed and those used additionally during inspection shall be submitted for review of Inspecting Engineer.
- PHYSICAL VERIFICATIONS:

DESCRIPTION	DEVIATION PERMITTED
Dimensional check as per Approved GA drgs	+/- 10.0 mm on overall dimension
Bolt hole locations as per Approved	+/- 02.0 mm

© 2022 MECON LIMITED. All rights reserved

GA Drgs	
Bolt hole sizes as per Approved GA Drgs	+/- 0.5 mm
Hydraulic Circuits As per Approved GA drgs	NO DEVIATION
Make/Models of all the Components as per Approved GA Drgs and Material List	NO DEVIATION

- PERFORMANCE TEST:

TEST	**ACCEPTANCE CRITERIA**
Chalk & Kerosene Swab Test on all welded joints of Tank	NO PERSPIRATION
Hydrostatic Test of Tank	NO BULGING/ NO LEAKAGE
Load Test of Pump for 30 minutes at System Working Pressure	NO LEAKAGE
Hydrostatic Test of all units except Tank for 15 minutes at 1.5 times System Working Pressure	NO LEAKAGE
Internal Leakage of Pumps at System Working Pressure (for Axial Piston Pumps only)	As per Supplier's Engg Data Sheet
Pressure drops across filters, coolers (oil side)	As per Tech Spec in Tender Enquiry/ Purchase Order
No Load Current of Electric Motors	Below Rated Current as per Test Certi.
Full Load Current of Electric Motors	Below Rated Current as per Test Certi.
Testing of Operation/Function of Temp Switch, Level Switch and Pressure Switch by Multimeter	NO DEVIATION
Internal Leakage of D C Valves (random) at System Working Pressure	As per Supplier's Engg Data Sheet

© 2022 MECON LIMITED. All rights reserved

TEST	ACCEPTANCE CRITERIA
Operation/Function of All the Components	As per Tech Spec in Tender Enquiry/ Purchase Order
Pressure drop across each Hydraulic Circuit	As per Tech Spec Purchase Order
Operation/Function of Solenoid Valves	NO STICKING
Operation/Function of PO Check Valves	NO LEAKAGE

1.4. PREFERRED MAKE

All the systems and components shall be selected from preferred make list Serial No 9 of GS-14. However for any deviation prior approval shall be taken from MIDHANI/MECON.

10.12.02 TECHNICAL SPECIFICATION OF CENTRALIZED DUAL LINE GREASE LUBRICATION SYSTEM

Dual line Centralized Grease Lubrication system consisting of the following major equipment shall be provided for grease lubrication (**if required**):

- Grease Reservoir.
- Grease Pumping Stations with filters, pressure switch, relief valve and change over valve.
- End Pressure Relay.
- Metering Manifold / Dose feeders.
- Grease Filling Pump.
- Indicating and control instruments.
- Interconnecting piping.
- Electrics and controls.
- Instruments.
- First fill of grease of NLGI EP2 quality.

© 2022 MECON LIMITED. All rights reserved

- Special tools and tackles.

1. DESIGN CONSIDERATION

The offered system shall be of rugged design, shall be suitable for long trouble free life under the duty condition and shall be of easy maintenance.

All the components of Grease Lubrication systems shall be designed, manufactured, assembled and tested in accordance with the latest general accepted codes, practices and international standards.

All electrical equipment / component of Grease Lubrication systems shall conform to latest Indian Electricity Regulations as regards to safety, earthing and other provisions.

2. TECHNICAL REQUIREMENT

Major components of dual line grease lubrication system is as follows:

RESERVOIR

Reservoir for grease lubrication systems shall be of adequate capacity to feed grease for reasonable hours of operation at least for 15 days of operation. It shall be made from general purpose structural steel of adequate thickness fitted with accessories to achieve specific purposes. It shall be of cylindrical shape and mounted on top of pumping equipment for efficient priming. The interior shall be oiled but not painted.

The reservoir shall be complete with a heavy inertia follower plate, tell-tail rod, fill connection with strainers & check valve, limit switches on the container lid to indicate full and empty reservoir for audio-visual alarms for low level & high level and for automatic starting of the filing pump at low level of the reservoir.

PUMPING UNIT

Two nos. of grease pumping unit (1W+1S), positive displacement plunger type of required grease flow capacity and pressure with heavy follower plate. The Tenderer shall clearly specify the working pressure and motor power selected.

© 2022 MECON LIMITED. All rights reserved

Pumping unit shall be complete with filter, relief valve assembly and pressure gauge of 1.5 times the working pressure. One (1) Y type line strainer of 75 micron brass screen, suitable for system working pressure, shall be located between pump and reversing valve with 1/2" BSPT connection.

AUTOMATIC CHANGE OVER VALVE

The hydraulically / electrically / pneumatically / electromagnetically operated change over valve shall be mounted after the pump. The change over valve shall be of spool type of robust construction and shall have gland packing to suit high grease pressure. The reversing valve shall be supplied with manual over ride. The pressure across valve with rated flow shall not exceed 3 kg/cm².

The above components shall be assembled on a common base frame and suitably piped up and supplied with necessary foundation bolts.

END PRESSURE RELAY

The system shall be equipped with adjustable pressure range type end pressure relay. This shall be mounted at the end of the system circuit just before the last dose feeder / metering manifold to ensure pressure attainment at the furthest end of the system during the cycle of operation and to alter the path of grease flow by reversing the directional valve (Automatic change over valve) by electrical impulses. This relay will dictate the automatic change over valve for supply of grease line from one line to the other line. The relay shall be equipped with two nos. of pressure gauges.

METERING MANIFOLD / DOSE FEEDER

Metering Manifolds shall have 3/8" BSP taper / parallel female inlet and 1/4" BSP taper/Parallel female outlet connections. The manifold shall be complete with 5 mm thick mounting pads and fasteners. Plastic caps to be provided for all openings.

The Metering manifolds shall be suitable for delivering required quantity of grease per stroke per outlet. The metering manifolds shall be suitable for 1.5 times of maximum working pressure. Leakage test shall be carried out with a lubricant of viscosity 120

© 2022 MECON LIMITED. All rights reserved

to 150 cSt at 40 deg. C. The manifolds shall be kept at a pressure of 1.5 times of maximum working pressure for two minutes in each extreme positions of piston. The rate of lubricant escape shall not exceed 3 drops per outlet per minute. Required pressure for movement of pistons against no load shall not exceed 20 bar. Dose feeder may be supplied with options of different outlets.

GREASE FILLING PUMP

Air operated / electrical motor operated pump to handle full range of lubricant from SAE 30 oil to NLGI 2 grease at basic temperature of 21 °C. For higher consistency or fibrous grease, a follower plate to be supplied. Pressure ratio of the pump, in case of air operated pump (lubricant to air) will be 40 to 1 (approx.). Pump to be supplied with suitable length double wire braided high pressure delivery hose equipped with end fittings suitable at one end for port on grease transfer pump and other end for port on grease transfer station. The pump capacity will be around 5 liters/min. at a room temperature of 25 °C and 50 PSI air pressure. This pump shall be equipped with relief valve and pressure gauge. Operation of this pump shall be governed by the limit switch mounted on the system reservoir. The grease filling pump shall be equipped with pneumatic pump hoist.

PIPING

a) All lubrication points shall have ¼" BSP parallel threads.

b) Tenderer has to specify suitable pipe/tube sizes of

- Main header
- Supply branch to dose feeder
- Dose feeder outlet

c) Tenderer has to ensure proper 'O' ring for high temperature zone.

d) Type of fitting 'O' ring or ferrule type

e) Hose of suitable rating for movable points.

f) Heavy duty polypropylene stauff clamp for tube size 12 mm OD & above and tube clips for less than 12 mm OD shall be used. All tubes shall be supported and clamped, generally at an interval of 1.5 meters.

© 2022 MECON LIMITED. All rights reserved

3. ELECTRIC CONTROL

For details of electrics refer Technical Specification of electrics.

4. INITIAL FILL / CONSUMABLES

Scope of supply shall include First fill of Grease in required quantity up to Successful commissioning & PG (as defined in contract), i.e. after commissioning all the system tanks and piping shall be full.

5. GENERAL INSTRUCTION TO THE TENDERERS

- All pipes / tubes shall be as per clause 4.05 of General Technical specification.
- Foundation bolts, nuts and washers are to be supplied.
- All isolating valves shall be ball valves and shall be equipped with visual indicator indicating fully open or fully closed conditions of valve.
- All butt weld joints shall be made by TIG welding only.
- All equipment shall be supplied with drives, associated electrics, instruments and control equipment, technological structures (if any), maintenance and working platforms, railing, safety guards etc.
- All the parts and mechanisms shall be designed for dusty and hot conditions.
- Any other equipment / part / facility not specifically mentioned in the specification, but are necessary technically or safety point of view for the satisfactory and smooth operation of the system shall also be included in the scope of the supply of the Tenderer.
- The successful Tenderer shall supply complete set of all the special tools and tackles including required number of tool boxes as required for erection, maintenance, overhaul or complete replacement of the equipment and components required for the offered system. All the tools shall be supplied in separate containers clearly marked with the name of the equipment they are meant for.

© 2022 MECON LIMITED. All rights reserved

- The Tenderer shall furnish a complete quality assurance plan and lists of tests to be conducted in his offer to ensure that the items supplied are without any defect. The tests and QAP shall be mutually discussed and finalised with the successful Tenderer.
- The purchaser shall have right to visit the Tenderer's / sub-supplier's works during various stages of manufacture.
- The tests / inspection shall include broadly the following: -
  - Visual inspection of offered equipment, modified equipment etc.
  - Checking the dimension with tolerance
  - Performance test of individual equipment, sub-system and total system
- Complete units shall be pressure tested at 1.5 times of system working pressure.
- Painting specification for tank (outside only) and equipment is as follows:
- Two (2) coats of red oxide zinc chromate primer and one (1) coat of finish enamel paint. Thickness of each coat should be around 30 microns and total thickness should not be less than 100 microns.
- Color code shall be shade no. 221 to IS: 5-1994, if not specified otherwise.
- Power units are to be filled with system fluid to prevent corrosion/rusting due to long storage openings of all the units to be linked for air tightness.
- The successful Tenderer shall submit following drawings/ data for approval before taking up manufacturing:
  - Selection criteria of size of pumping unit, reservoir capacity, motor rating tube sizing etc.
  - P&ID drawing, GA drawing and interconnecting piping drawing including location and size of inserts/ opening with complete BOM.
  - Load data for floor design along with bolt plan.
  - Electrics as specified later in the specification.

© 2022 MECON LIMITED. All rights reserved

6. ACCEPTANCE CRITERIA FOR INSPECTION

- Manufacturers' Test Certificates for all bought out items e.g. Electric Motors, Instruments, Control Valves, etc. shall be submitted for review of Inspecting Engineer.
- Valid Calibration Certificates for instruments installed and those used additionally during Inspection shall be submitted for review of Inspecting Engineer.
- PHYSICAL VERIFICATIONS :

DESCRIPTION	DEVIATION PERMITTED
Dimensional check as per Approved GA Drgs	+/- 10.0 mm on overall dimension
Bolt hole locations as per Approved GA Drgs	+/- 02.0 mm
Bolt hole sizes as per Approved GA Drgs	+/- 0.5 mm
Pump-Motor alignment	
Radial Alignment	As per supplier catalogue
Angular Alignment	As per supplier catalogue
Angular Alignment	As per supplier catalogue
Circuit as per Approved Drgs	NO DEVIATION
Make/Models of all the components as per Approved GA Drgs and Material List	NO DEVIATION

- PERFORMANCE TEST :

TEST	ACCEPTANCE CRITERIA
Load Test of Pumping Unit for 30 minutes at System Working	NO LEAKAGE
Pressure Test of Pumping Units for 15 minutes at 1.5 times System Working Pressure	NO LEAKAGE
No Load Current of Electric Motors	Below Rated Current as per Test Certificate

© 2022 MECON LIMITED. All rights reserved

Full Load Current of Electric Motors	Below Rated Current as per Test Certificate
Testing of Operation/Function of Level Switches and End Pressure Relay by Multimeter	NO DEVIATION
Operation/Function of all the Components	As per Tech Spec in Tender Enquiry/ Purchase Order
Operation/Function of Solenoid Valves	NO STICKING
Delivery per outlet per stroke from Metering Manifold MIN. 10% 0F QTY. TO BE CHECKED	As per Tech Spec in Tender Enquiry/ Purchase Order
Minimum Pressure required for movement of piston of Metering Manifold	As per Tech Spec in Tender Enquiry/ Purchase Order
Leakage Test : No. of drops per outlet per minute(Test Pressure as per PO)	As per Tech Spec in Tender Enquiry/ Purchase Order

7. PREFFERED MAKE

All the systems and components shall be selected from preferred make list Serial No 9 of GS-14. However for any deviation prior approval shall be taken from MIDHANI/MECON.

© 2022 MECON LIMITED. All rights reserved

10.13 Civil Engineering Works:-

10.13.01 The Bidder shall submit all the information required in the form of data/drawings based on which the civil detailed engineering drawings shall be prepared by the Purchaser's consultant. The Bidder shall submit the integrated general layout with sectional views, blow up views, foundation bolt details, etc. The layout and sectional drawings shall show all necessary dimensions for preparation of civil working drawings.

10.13.02 The civil engineering assignment drawings to be prepared by Bidder shall include the following :

1. Buildings, basements, trenches under the scope of Purchaser.

   i. Details of underground facilities like trenches, tunnels, tanks, cellars, premises, etc.

   ii. Details of inserts, anchor bolts showing location of bolts, projection above concrete, threaded length, diameter, etc.

   iii. Grouting details with grade, type of grout recommended, if any.

   iv. Details of control rooms, electrical and hydraulics rooms, rest room, shift office rooms, store rooms, etc. showing the detail of floor loads, doors, windows & types of flooring.

   v. False ceiling, False flooring requirements for various buildings.

   vi. Process drainage/waste disposal requirements, if any.

2. Foundation for technological structures under the scope of Contractor.

   i. Load data for all technological structures including erection loads.

   ii. Details of inserts, anchor bolts showing location of bolts, projection above concrete, threaded length, diameter, etc.

   iii. Grouting details with grade, type of grout recommended.

© 2022 MECON LIMITED. All rights reserved

iv. Environmental details like temperature, pressure, corrosion prevailing over or around the structures.

v. Process drainage/waste disposal requirements, if any.

vi. Sequence of erection of structures / equipment and the sequence of civil structures required.

3. Machine and equipment foundations

i. Foundation plan and sections/elevations.

ii. Details of anchor bolts showing location, projection above concrete, threaded length, diameter, etc.

iii. Details of anchor box/sleeve.

iv. Details of all inserts, conduits to be embedded in concrete/brick work.

v. Complete load data and their point of application including dynamic loads wherever applicable. Operating speed, permissible amplitude, if different from standard values.

vi. Grouting details with grade, type of grout, strength of grout recommended.

vii. Protection requirements, if any, against heat, temperature, corrosion, pollution, etc.

viii. Process drainage/waste disposal requirements.

ix. Sequence of erection of equipment and details of erection openings required, if any.

10.13.03 All relevant data necessary for preparation of Civil working drawings for any other units under the Contractor's scope of work / supply.

10.13.04 Floor loadings to be considered in designing of foundations/ structures for the areas under the Contractor's scope of work / supply.

© 2022 MECON LIMITED. All rights reserved

10.13.05 General

1. The Purchaser will carry out the detailed engineering for entire civil engineering work based on the civil assignment drawings of the package. The changes, if any, required to be incorporated in the basic civil assignment drawing in course of engineering of the project, shall be done by the package Contractor and shall be submitted to the Purchaser. Influence of time schedule shall be mutually agreed.

2. Detailed engineering drawings for civil works relating to equipment foundations and structures/premises for which basic engineering is done by package contractor shall be examined and concurred by the package contractor before they are released for construction.

3. Detailed engineering drawings relating to underground premises/ cellars/service lines and building column foundations for which basic engineering is done by the Purchaser shall also be examined and concurred by package contractor before they are released for construction.

4. The permissible tolerances in various levels and dimensions of civil structures shall be specified by the package Contractor wherever required.

5. Concurrence by package contractor wherever applicable shall be completed within seven days from the date of receipt. The methodology will be decided by mutual discussions.

6. Supervision of the critical foundations, wherever felt necessary shall be provided by the package Contractor.

© 2022 MECON LIMITED. All rights reserved

10.14 Structural Engineering Works:-

10.14.01 The Bidder shall submit all the information required in the form of data/drawings based on which the structural detailed engineering drawings shall be prepared by the Purchaser's consultant. The Bidder shall submit the integrated general layout with sectional views, blow up views etc. The layout and sectional drawings shall show all necessary dimensions for preparation of structural working drawings.

10.14.02 The structural engineering assignment drawings to be prepared by Bidder shall include the following:

1. Building Plan, cross section , elevations, Levels
2. Equipment Loads Vertical/ horizontals/ static and dynamic
3. Equipment Dispositions
4. Equipment clearance Diagram
5. Piping Loads
6. Cables Loads
7. Ducting loads
8. Equipment maintenance Platforms, level and access detail
9. Shop entry and Side clearance
10. Entry Locations of pipes ducts, galleries with levels and clearance diagrams
11. Staircase location for access to various floor
12. Requirement of shop ventilation with fixed monitor/ Turbo ventilators

10.14.03 All relevant data necessary for preparation of structural working drawings for any other units under the Bidders scope.

10.14.04 General

The Purchaser will carry out the detailed engineering for entire structural engineering work based on the structural assignment drawings of the package. The changes, if any, required to be incorporated in the basic structural assignment drawing in course of engineering of the project, shall be done by the Bidder and shall be

© 2022 MECON LIMITED. All rights reserved

submitted to the Purchaser. However, there should not be any influence on time schedule.

1. General arrangement drawings for structural works relating to structures/premises for which basic engineering is done by Bidder shall be examined and concurred by them.

2. The permissible tolerances in various levels and dimensions of steel structures shall be specified by the Bidderwherever required.

3. Concurrence by Bidder wherever applicable shall be completed within seven days from the date of receipt. The methodology will be decided by mutual discussions.

© 2022 MECON LIMITED. All rights reserved

11.0 Spares, Consumables and Tool & Tackles

11.01 Commissioning spares

The Tenderer shall include in his scope of supply all spares required for successful commissioning and start-up of the plant and equipment covered under this TS and associated facilities. The commissioning spares shall form a part of main offer and shall be supplied along with the equipment. The list of commissioning spares for the plant and equipment shall be furnished in the tender.

11.02 Operation and maintenance spares

The Tenderer shall include in his scope of supply and submit a comprehensive list of operation and maintenance spares including insurance / interchangeable spares of plant and equipment required for two years normal operation and maintenance of plant and equipment, except otherwise mentioned.

11.03 Insurance spares

Tenderer will indicate the list of insurance spares in their offer.

11.04 Consumables

The Tenderer shall furnish in the tender complete information on specification and consumption norms of all consumable materials such as refractories, lubricants, greases, hydraulic oils, chemicals, resins, etc. Tenderer shall include in his scope of supply all consumables required upto 100 heats.

11.05 Tools and Tackles

The Tenderer shall include the following tools and tackles in his scope of supply:

© 2022 MECON LIMITED. All rights reserved

- One set of special tools and tackles for erection, testing and commissioning of plant and equipment, systems and sub-systems covered in this TS.
- One set of special tools and tackles for operation / repair / maintenance of plant and equipment.

The list of tools to be furnished by Tenderer in each category shall be indicated along with their itemized weights.

All the tools shall be supplied in separate containers clearly marked with the name of equipment for which they are intended.

© 2022 MECON LIMITED. All rights reserved

12.0 Completeness

The Tenderer's scope of work shall include supply of process technology/know-how and supply, erection, testing and commissioning of all plant and equipment, electrics, instrumentation, technological structures, services, utilities, etc. as mentioned in this Technical Specification within battery limits. However, any equipment, fittings, materials or supplies, not specifically, mentioned in this Technical Specification but essential for their proper design, assembly, safe and smooth operation and performance shall be deemed to be included in the Tenderer's scope. The offered unit along with system must be complete in all respects and shall be in perfect running condition to comply with the guaranteed performance.

© 2022 MECON LIMITED. All rights reserved

13. Project Implementation Schedule & Progress Monitoring

13.01 The project envisages installation of high end aluminium alloy melting and casting plant at Nellore, Andhra Pradesh for M/s Utkarsh Aluminium Dhatu Nigam Limited (UADNL). The proposed plant shall be commissioned within 24 **months** (including PAC) from the Zero Date which will be reckoned as effective date of contract. Zero Date and Commissioning as mentioned above and shown in schedule shall be same as defined in the technical and commercial part of the specification.

An indicative Implementation schedule, in line with the total time period and indicating the major activities, is shown in drg. no. **MEC/UADNL/11/PY/Q7R6/TS/SAAP-01/01/R0** for reference.

13.02 Project Schedule

The Tenderer shall submit the following along with the tender.

i) Overall bar-chart schedule
The overall bar-chart schedule should be planned in weeks and shall show the major activities of the project. The major milestones for the project are also to be highlighted in the schedule.

ii) Off-site / On-site organization charts for execution of the project.

13.03 The Tenderer shall note the following:

i) **Construction Water:** Construction Water shall be provided as per actual requirement within reasonable limit.

ii) **Construction Power:** Construction Power shall be provided as per actual requirement within reasonable limit.

iii) **Construction & Storage Area:** Battery limit area shall be utilized for construction and storage. However, if any area outside the

© 2022 MECON LIMITED. All rights reserved

UTKARSHA ALUMINIUM DHATU NIGAM LIMITED (UADNL)

HIGH END ALUMINIUM ALLOY MELTING AND CASTING PLANT (PACKAGE NO. - SAAP-01)

INDICATIVE IMPLEMENTATION SCHEDULE

ID	Task Name	Dur(w)
1	**UADNL - High end aluminium alloy melting and casting plant (Pkg No.-SAAP-01)**	**104 w**
2	Effective date of Contract (Zero-date)	0 w
3	Basic Engg. submission & Approval	8 w
4	Submission of Load Data & Feedback Data for Civil/ Structures etc.	4 w
5	Tendering & Ordering on Sub-vendors	17 w
6	Detailed Design & Engineering & Approval	30 w
7	Civil & Structural Works (by the Purchaser)	65 w
8	Manufacturing, inspection & supply of Equipment	69 w
9	Erection of Equipment	35 w
10	Testing, Trial Run, PAC & Commissioning	13 w

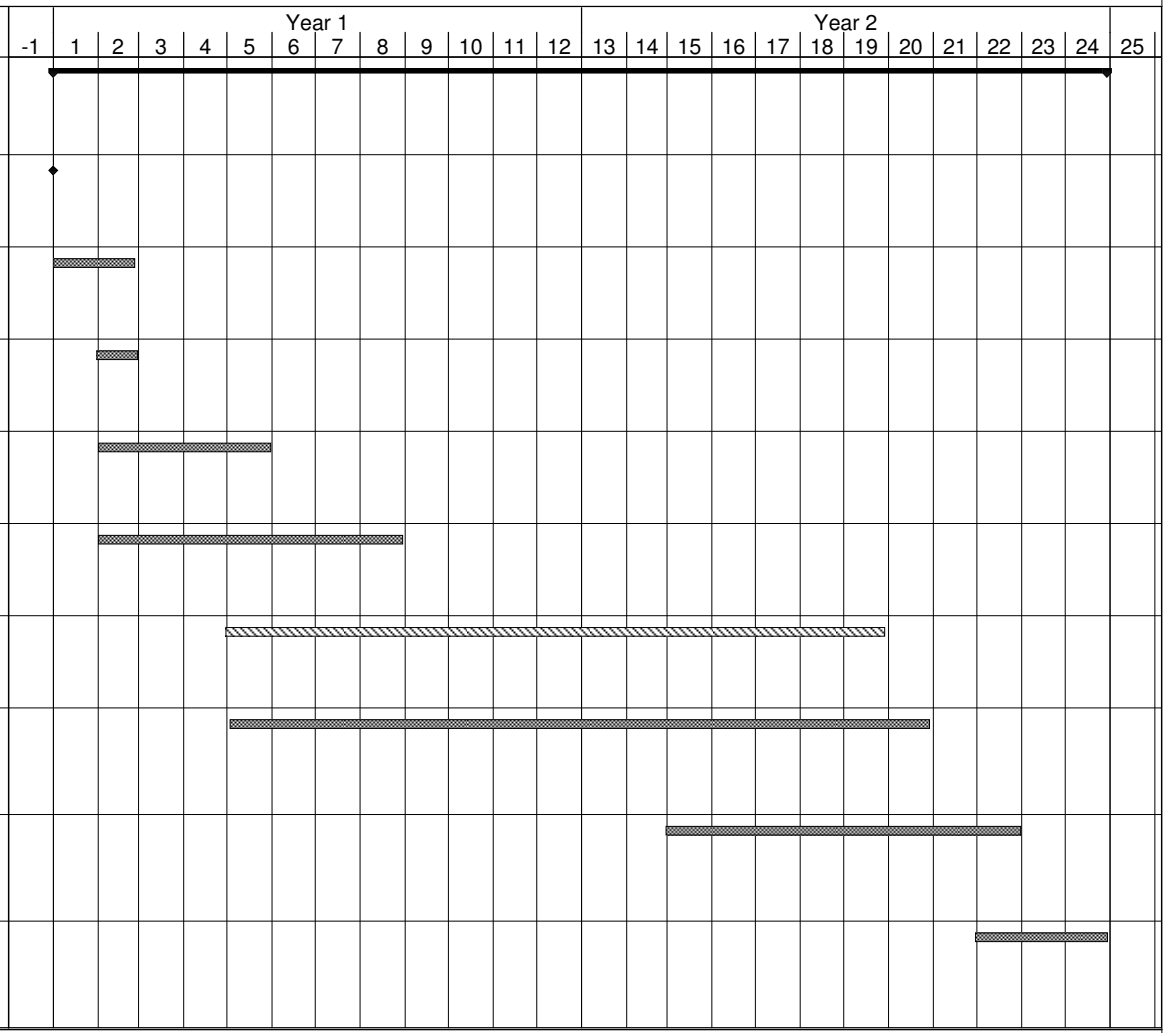

UADNL - Melting and casting plant (Pkg-SAAP-01) TS Schedule_24Month

Task Milestone Summary

© 2022 - MECON limited. All rights reserved

DRG. No : MEC/UADNL/11/PY/Q7R6/TS/SAAP-01/01/R0

battery limit is available, Contractor may utilize it with the permission of the client.

13.04 The tenderer shall submit the following documents before finalization of contract:

i) Deployment of construction man power.
ii) Details of deployment of equipment and machinery, tools & tackles, etc.

13.05 The Successful Tenderer shall have to submit the following after signing of contract:

i) Load Data & feedback Data for Civil/ Structures etc. within 2 months from effective date of contract.

ii) The detailed project network (Level-II network) schedule, both in hard and editable soft copy (in MS Project / Primavera) covering further details of project activities, area-wise, for the total scope of the package, within 2 months of effective date of contract for approval and finalization by the Purchaser / Consultant.

iii) The format of progress report shall be discussed and agreed upon within 1 month from effective date of contract.

iv) Updated detailed project network (Level-II network) schedule (in hard and soft copies) shall be submitted along with monthly progress reports (in approved format) every month.

13.06 Progress Monitoring

An effective system of progress monitoring is to be evolved to ensure timely completion of all project activities. A monthly progress report showing current status of various activities shall be submitted by the

© 2022 MECON LIMITED. All rights reserved

Contractor to the Purchaser and his Consultants. The monthly progress report shall indicate progress of activities against targeted quantities. Reasons for shortfalls, if any, shall be clearly brought out and proposed remedial measures to arrest the delays shall be indicated by the Contractor in the progress report, wherever applicable.

In general, progress of the following major activities is to be reported.

- Issue of ordering / technical specifications and placement of orders on sub-vendors for bought out items / components
- Detailed design and engineering including submission of drawings and their approval, subsequent revisions and resubmissions.
- Manufacturing activities at the works of the Contractors / associates / sub-vendors.
- The progress report on inspection status.
- Dispatch of equipment to site.
- Site activities including receipt of material / equipment at site, erection, testing and commissioning.

Two months prior to start of site activities, the Contractor shall submit a schedule for site-execution, along with quantitative programme in terms of month-wise physical targets for various disciplines of work. After the site activities are started, the Contractor shall furnish information on site activities viz. daily, weekly and monthly progress reports on construction / erection, receipt of equipment against monthly construction / erection plan, etc. The

© 2022 MECON LIMITED. All rights reserved

Contractor shall also indicate resource deployment at site, highlights of critical areas and constraints faced in the site progress reports.

Other information related to site activities as may be required by the Purchaser and consultant, shall also be submitted by the contractor.

In the interest of timely completion of the project, if requires, the priority of construction / erection may be altered by the Purchaser and consultant, in consultation with the contractor.

13.07 The Purchaser /Consultant shall also have the right to:

- Invite the successful Tenderer for monthly / fortnightly meetings to review the progress of each activity.
- Depute Purchaser's authorized representatives for ascertaining / expediting progress at contractor's works.
- Suggest remedial actions to bridge-up time gap between planned progress & observed progress.

Following IS codes may also be referred by the Contactor as guideline for preparation of project network schedule, organization chart, progress reports, etc.

I. IS 14580 (Part 1): 1998 & IS 14580 (Part 2): 2006
II. IS 15883 (Part 1): 2009 & IS 15883 (Part 2): 2013

© 2022 MECON LIMITED. All rights reserved

14.0 Inspection, Erection, Testing and Commissioning

The contractor shall carry out the complete inspection, erection, testing and commissioning of the offered equipment/system including all accessories. Testing shall involve trial test run, cold test, Hot test and performance guarantee test.

The successful tenderer shall submit an erection plan for the equipment.

14.01 Inspection

1. Inspection and testing shall be carried-out by the purchaser/ purchaser's representative. The purchaser shall have under agreement with the tenderer a general right at all reasonable time to enter any works, where the supplies pertaining to this contract are in the process of manufacturing or testing for the purpose of checking the progress and inspecting the items. The purchaser shall be allowed to use all the testing facilities available with the manufacturer for the purpose of testing. Such tests for which there are no adequate facilities with the supplier/sub-supplier will be carried out at the mutually agreed testing laboratories at the cost of tenderer.
2. The inspection will be carried out as per the mutually agreed procedure. Inspection shall be regarded as a checking and in no way binding on the purchaser.
3. The purchaser shall have full right to accept or reject the materials /items, if during inspection and testing, the same are found not conforming to the specifications.
4. The inspection will be carried out based on approved drawings/materials.
5. A copy of the orders on the sub-suppliers comprising detailed specification, the qualities of the materials, bill of materials, relevant drawings/ documents etc. shall be sent to the purchaser at least one month before the start of inspection.

© 2022 MECON LIMITED. All rights reserved

6. The tenderer shall inspect the material/equipment before offering to the purchaser for inspection and satisfy and issue an internal inspection certificate along with manufactures test certificate singed by competent authority.

7. The tenderer shall send the intimation for inspection along with his internal inspection certificate at least two weeks prior of clear margin to the start of inspection, while sending the information, the tenderer shall ensure that a reasonable quality is offered for inspection.

8. For refractory/insulating materials the manufacture shall control the production by samples tested in his laboratory to make sure that the materials are in accordance with the agreed data. The results of such tests done at the place of manufacturer shall be made available to the purchaser.

9. During the inspection of refractory/insulating materials, the purchaser, in the presence of manufacture, shall draw samples for testing of various properties. The supplier will render all assistance during drawing samples, checking for physical appearance, size & tolerance and testing at their laboratory. The testing shall be conducted as per the standards mentioned in technical specification or their equivalent. IS and/ or mutually agreeable standards shall be followed. All the testing shall be carried out at the manufacture's laboratory in the presence of his representative and test results shall be signed by both manufacture and purchaser.

10. The inspection certificate will be issued by the purchaser/ MECON within a week after successful completion of the inspection.

11. The tenderer, on receipt of the certificate shall ensure that only accepted materials are dispatched.

12. Incase of any dispute, the samples for refractory/ insulating materials shall be sent to national laboratory for necessary testing at the full expense of the tenderer.

13. The tenderer on being requested shall present sufficient documentary evidence that the materials used for the manufacture of the plant and

© 2022 MECON LIMITED. All rights reserved

equipment will meet the specification requirements with respect to materials used by tenderer for the plant and equipment such as structural steel, mild steel, cast iron, cast steel etc, the tenderer shall produce requisite test certificates along with specification, and test pieces on which test were carried out by the manufacture, at the time of examination. With respect to few castings or forgings the tenderer shall arrange for necessary x-ray and ultrasonic test to be carried out at his own cost; however these have to be indicated in QAP/specification.

14. The purchaser or his duly authorized representative shall have the right to be present at all the tests carried out and arrange by the tenderer. If called for, samples and specimens shall become the purchaser's property. The tenderer shall notify the purchaser in an appropriate manner as to the progress of the contract work particularly before any assembly in order that the inspection on test can be carried out as may be required to ascertain without prejudice to the tenderer liability whether the materials and/or service are in conformity with the requirements of the contract.

14.02 Erection

The erection plan shall outline

- The erection techniques to be employed
- Deployment of erection machinery
- Erection material planning
- Sequence of erection
- Safety Assurance Plan

(i) The erection contractor shall make arrangement for all construction equipment, tools & tackles, erection consumables, testing instrument etc.

(ii) All necessary temporary ladders, scaffolding materials, platforms and other necessary facilities required for handling and erection of equipment shall be provided by the contractor.

© 2022 MECON LIMITED. All rights reserved

(iii) The contractor shall deploy required number of supervisory, skilled, unskilled and auxiliary labour as required for the erection work.

(iv) There may be more than one contractor working in the vicinity area at the same time and work has to be carried out in proper co-ordination and in consultation with the purchaser and all other parties concerned with the work.

(v) The contractor shall maintain their own stores for the storage of equipment. All security arrangement shall also be made by the contractor.

(vi) Any damage during transport / storage shall be made good by the contractor.

(vii) The contractor will align, level, couple and securely fix all equipment, steel structure and appurtenances accessories in accordance with drawings and/or instructions.

(viii) All equipment shall be checked for free movement by hand rotation and correctly aligned and installed. After the equipment has been installed, levelled and aligned, the foundation bolts shall be tightened and bolts/base plates will be grouted. When the grout has thoroughly cured, the alignment will be rechecked and rectified, if required.

(ix) Touch-up painting of damaged portion of the erected equipment/structures shall be done by the contractor.

(x) The Tenderer shall submit with his offer, for equipment erection, necessary details such as schedule of erection, category wise deployment of erection personnel, etc as called for in the invitation

© 2022 MECON LIMITED. All rights reserved

to Tender and General conditions of Contract for supply and erection of plant and equipment.

14.03 Performance Guarantee Test and issue of PAC (Provisional Acceptance Certificate)

On completion of erection, The following general checks shall be made for all equipment.

- Smooth running of all technological and auxiliary equipment / drives and non-occurrence of any abnormal sound from any equipment.
- Welding check for all structures
- Erection of all equipment, alignment as per approved drawings.
- Check on safety aspects, process interlocks etc.
- Alignment of rotating equipment
- First filling of lubricant for all system till commissioning
- Check the direction of rotation of electrical motor before fixing of the coupling.
- No load run / movement test for all the moving devices.
- Vibration on equipment / supporting structures.
- Temperature rise in motors, gear boxes
- Working of all safety switches and zero speed switches, etc.

A defect list/observations shall be jointly prepared and duly signed by all concerned, detailing the required rectification. All the points in the defect list will be attended and rectified by the contractor and the equipment shall be offered for re-inspection to Purchaser / Purchaser's representatives.

© 2022 MECON LIMITED. All rights reserved

When Purchaser / Purchaser's representatives have been fully satisfied that all the defects have been rectified and that the equipment / system is fit to be operated, purchaser shall allow the successful tender to proceed for Performance Guarantee Test demonstration.

Provisional acceptance certificate will be issued to the contractor by the Purchaser after the guaranteed test and values given in Performance Guarantee clauses are established to the satisfaction of the Purchaser, but subject to the fulfillment of the provisions and other conditions for issue of provisional acceptance certificate.

14.04 Final Acceptance Certificate (FAC)

Final acceptance certificate will be issued after continuous satisfactory operation of the equipment for a period of twelve (12) months after issuance of Provisional Acceptance Certificate, but subject to the fulfillment of the provisions and other conditions for issuance of final acceptance certificate.

14.05 Commissioning

Contractor shall commission all the equipment/system supplied by him under full load condition.

i) The contractor shall carry out the complete erection, testing and commissioning of the offered equipment/system including all accessories. Testing shall involve trial test run, cold test, hot test and performance guarantee test.

ii) The successful tenderer shall submit an erection plan for the equipment.

© 2022 MECON LIMITED. All rights reserved

15.0 Performance Guarantee

General

All equipment shall be guaranteed against poor quality of material, bad workmanship. etc. for a period of one year from the date of commissioning. Any such equipment/part found defective during normal operation and maintenance of the line (other than by way of equipment abuse) the Tenderer shall replace/rectify such defects immediately without affecting the production of line.

The Tenderer shall provide a performance guarantee for the line for delivering the rated output based on the reference sizes of materials. The detailed procedure for conducting the tests shall be indicated in the bid which shall be mutually agreed upon before placement of order.

The auxiliary systems such as hydraulic, pneumatic systems, etc. shall also be guaranteed for delivering the rated output.

The Purchaser shall provide all necessary consumables and materials required for conducting the guarantee tests except first fill for auxiliary systems.

All necessary measuring and testing instruments required for the tests shall be provided by the tenderer.

The tenderer shall guarantee the production capacity and quality of the cast slabs & billets for package 01 output with respect to physical and metallurgical properties.

15.01 Melting Furnaces

1. Capacity

To hold at 750 ± 5^{0}C (on the instruments) not less than 55t of molten aluminum when bath level i.e., molten metal level is 150mm below the pouring spout level.

2. Melting Rate

6.5 t/h with no heel. The melting rate will be checked for charge of 39.0t charge comprising of solid pieces each weighting not more than 20 kgs. The furnace will be heated to the operating

© 2022 MECON LIMITED. All rights reserved

temperature of approx. 1000/ 1050^{0}C before charging. The charging will be in steps and the total charge weight of 39.0 t will be introduced during the first 3 hours. It is assumed that during the total charging period, the door shall remain open for not more than 50 minutes. During the next 3 hours all doors shall remain closed. At the end of 6 hours (counted from the time when the charge is first introduced) 39t of molten aluminium will be available at 750 ± 5^{0}C (on the instruments).

Average of 4 separate tests will be accepted.

3. Skin Temperature

85^{0}C maximum temperature on the side walls above sill level, 110^{0}C maximum temperature on side walls below sill level, hearth & ramp/bottom and 100^{0}C maximum temperature on the roof as measured at mutually agreed points except on doors, roof anchors, 500mm away from any opening, hole etc.

Tests will be conducted during normal operation i.e. holding with molten aluminium at 750 $\pm$ 5^{0}C on instruments measured at 100 mm below metal level with all doors closed. Ambient temperature will be measured at 5m distance around the furnaces. Reading will be taken at mutually agreed time intervals for 24 hours and the average of three values will be considered.

4. Fuel consumption

a) Tenderer shall indicate the specific heat parameters (i.e., GCal/ton) in sealed envelope separately for melting operation and holding operation.

b) Tenderer shall demonstrate their guaranteed specific heat for melting rate of 6.5t/h under condition / procedures outline in (2) above for achieving the temperature at the end of 6 hours as 750$\pm$5^0 C on the instrument measured at 100mm below metal level.

c) Tenderer shall demonstrate their guaranteed fuel consumption for holding 55t of hot metal at 750$\pm$5^{0}C. The test duration shall start after the bath has stabilized at 750$\pm$5^{0}C. Three consecutive reading shall be taken at an interval of one hour to establish guaranteed fuel consumption to maintain 750$\pm$ 5^{0}C.

© 2022 MECON LIMITED. All rights reserved

d) The fuel consumption shall be considered as loading parameter while evaluating the bid. The loading formula shall be as follows:-

L= (PG-PL) X C X DF X 5500
Where:
L = Loading on Tenderer's price.
PG = Guaranteed utility consumption by the Tenderer.
PL = Lowest guaranteed consumption amongst the Tenderers.
C = Unit cost of utility
DF= Discount Factor calculated as follow:

$$DF= \sum_{n=2}^{n=k+1}[1 \div \{1 + \left(\frac{x}{100}\right)\}^n]$$

Where
K= 20 years (from 2nd to 21st year as 1st year is considered as startup of operation), the life of the equipment.
X= Interest rate = 10%
5500 = Operating hours for one furnace to achieve the considered production, which may change to annual Production rate and the likes as required.

e) It has been proposed that if the lowest Tenderer status changes due to the above loading, the new lowest Tenderer emerged based on the evaluated price has to submit a BG equivalent to the loading amount on the pre-evaluated lowest Tenderer in addition to CPBG.

f) Total Fuel consumption (in Gcal) for four (4) days continuous operation of both the furnaces for production of 800t of molten metal (100% solid) shall be furnished by the Tenderer.

5. Noise level

Noise level shall be 85 db at a distance of 1m around the furnace at working level.

© 2022 MECON LIMITED. All rights reserved

15.02 Holding Furnaces

1. Capacity

To hold at 740 ± 5^{0}C (on the instruments) not less than 50t of molten aluminum when bath level i.e., molten metal level is 150mm below the pouring spout level.

2. Skin Temperature

85^{0}C maximum temperature on the side walls above sill level, 110^{0}C maximum temperature on side walls below sill level, hearth & ramp/bottom and 100^{0}C maximum temperature on the roof as measured at mutually agreed points except on doors, roof anchors, 500mm away from any opening, hole etc..

Tests will be conducted during normal operation i.e. holding with molten aluminium at 740 ± 5^{0}C on instruments measured at 100 mm below metal level with all doors closed. Ambient temperature will be measured at 5m distance around the furnaces. Reading will be taken at mutually agreed time intervals for 24 hours and the average of three values will be considered.

3. Fuel consumption

a) Tenderers shall indicate the specific fuel heat parameters (i.e., Gcal/ton) in sealed envelope separately for holding operation.

b) Tenderer shall demonstrate their guaranteed fuel consumption for holding 50t of hot metal at 740 ± 5^{0}C. The test duration shall start after the bath has stabilized at 740 ± 5^{0}C. Three consecutive reading shall be taken at an interval of one hour to establish guaranteed fuel consumption to maintain 740 ± 5^{0}C.

c) The fuel consumption shall be considered as loading parameter while evaluating the bid. The loading formula shall be as follows:-

L= (PG-PL) X C X DF X 5500
Where:
L = Loading on Tenderer's price.
PG = Guaranteed utility consumption by the Tenderer.
PL = Lowest guaranteed consumption amongst the Tenderers.
C = Unit cost of utility

© 2022 MECON LIMITED. All rights reserved

DF= Discount Factor calculated as follow:

$$DF= \sum_{n=2}^{n=k+1}[1 \div \{1+\left(\frac{x}{100}\right)\}^n]$$

Where
K= 20 years (from 2nd to 21st year as 1st year is considered as startup of operation), the life of the equipment.
X= Interest rate = 10%
5500 = Operating hours for one furnace to achieve the considered production, which may change to annual Production rate and the likes as required.

4. Noise level

Noise level shall be 85 dB at a distance of 1m around the furnace at working level.

15.03 Vertical DC Caster

1. Capacity:

There shall be two Vertical DC Caster. Each Vertical DC Caster should have the production rate sufficient to cast alloy of 50,000 tonnes/year. The Performance guarantee parameters for any of the 6 alloys from the following list of Aluminium Alloy slabs & billets with atleast one from each alloy series (2XXX,5XXX,6XXX,7XXX) are to be demonstrated:

2014, 2124, 2219, 5052, 5083, 6061, 6082, 7010, 7050 and 7075

2. Chemical Quality Indicators

The following Chemical composition parameters of the cast slabs & billets are to be demonstrated.

Grade	Copper (Cu)	Magnesium (Mg)	Silicon (Si)	Iron (Fe)	Manganese (Mn)	Zinc (Zn)	Titanium (Ti)	Chromium (Cr)	Others
2014	4.2-4.7	0.3-0.7	0.7-1	0.4*	0.6-1	0.15*	0.1*	0.06*	0-0.05
2124	4.1-4.6	1.35-1.65	0.1*	0.3*	0.45-0.75	0.15*	0.1*	0.1*	-
2219	6-6.6	0.02*	0.1*	0.18*	0.25-0.35	0.06*	0.04-0.08	-	0-0.05

© 2022 MECON LIMITED. All rights reserved

Grade	Copper (Cu)	Magnesium (Mg)	Silicon (Si)	Iron (Fe)	Manganese (Mn)	Zinc (Zn)	Titanium (Ti)	Chromium (Cr)	Others
5052	0.06*	1.9-2.4	0.3*	0.4*	0.3*	0.1*	0.1*	0.15*	Cr+Mn= 0.3*
5083	0.06*	4.2-4.7	0.2*	0.2*	0.5-0.9	0.15*	0.1*	0.1-0.2	0-0.05
6061	0.2-0.35	0.8-1.1	0.5-0.7	0.4*	0.1*	0.1*	0.1*	0.2-0.3	0-0.05
6082	0.06*	0.7-1.1	0.8-1.2	0.3*	0.6-0.8	0.1*	0.06*	0.15*	0-0.05
7010	1.6-1.9	2.2-2.5	0.08*	0.1*	0.06*	5.9-6.5	0.06*	0.04*	0.12-0.14 Zr
7050	2.1-2.5	2.1-2.4	0.1*	0.15*	0.1*	5.9-6.5	0.06*	0.04*	0.10-0.13 Zr
7075	1.4-1.8	2.3-2.7	0.2*	0.3*	0.15*	5.3-5.8	0.1*	0.20-0.26	0-0.05

Note- * denotes limits are in weight percent maximum unless shown as a range or stated otherwise.

3. Physical Quality Indicators

The following physical quality parameters of the cast slabs & billets are to be demonstrated.

a) Inclusions – Should be free from inclusions of size more than 10 micron. There should not be more than 2 nos. of inclusions of maximum size of 10 micron over a sample area of 1 square inch of the cast slab & billet.

b) The Hydrogen content should be maximum of 0.11 cc/100 gmof molten metal before casting.

c) All the metals should conform ultrasonic Class-AA as per AMS2154/AMS 2630.

d) The porosity should not be more than 10 micron in size. There should not be porosity more than 2 nos. of maximum size 5 micron over a sample area of 1 square inch of the cast slab & billet.

e) Maximum segregation of 4% shall be allowed.

f) Pit recovery should be a minimum of 98%.

g) The grain size: 250 microns max.

© 2022 MECON LIMITED. All rights reserved

h) Dimensional Tolerance:

- For slabs- ±2 mm for width, ±2 mm for thickness
- For Billet: 8" / 9"size: (+) 0 & (-) 1.0 mm
  18" size: (+) 0 & (-) 1.5 mm
  26" size: (+) 0 & (-) 2.0 mm

i) Straightness / Billet bow: 1 mm per meter length of billet and max 3 mm in total length.

j)Surface Defects-

--- lightly liquated lapped surface, no tears, no bleed outs, no oxide patches, no dents, no scratches, longitudnal tears/drag marks acceptable upto 1 mm in depth.

--- Mechanical damage from homogenizing spacer bars, crane handling etc., not to exceed 1 mm in depth.

--- Not more than 5% surface area may have foreign material, paint or rust.

15.04 Homogenizing Unit

SL. No	Parameters	Target Value
1.	Guaranteed Specific Energy Consumption for production of 50T cast products of aluminium hard alloys of grade 5XXX/ 6XXX charge + Wt. Of charge support 1) Electrical Energy (excluding fan motor power) (kWh/t) 2) Gas Consumption (kg/t)	As specified in the bid
2.	Heating Rate of charge (°C/hr)	As specified in the bid
3.	Furnace temperature uniformity	$\pm$ 5^{0}C
4.	Noise Level	Maximum permissible noise level shall be 85 dBa at 1 m distance.
5.	Cooling rate of charge (°C/hr)	As specified in the bid
6.	Shell Skin Temp	As specified in the bid

© 2022 MECON LIMITED. All rights reserved

15.05 Ultrasonic Inspection Equipment

The Performance Guarantee of Ultrasonic Inspection Equipment should be done for both on-line as well as off-line equipment. The on-line Ultrasonic Inspection equipment should be able to detect flaws during casting and provide input for corrective actions in order to avoid production of defective slabs & billets. The off-line Ultrasonic Inspection equipment should be able to detect defects after casting of the slabsare completed. Both type of Ultrasonic Inspection equipment should be equipped well to measure the dimension of slabs & billets.

1. Test Sensitivity

a) For internal defects: FBH 0.8 mm;

b) For top surface defects: longitudinal notch 0.2(D)x0.1(W)x25 (L) mm made along the slab main axis

c) For lower surfaces defects: longitudinal notches acc.

Thickness of Aluminium slab	Detection sensitivity of longitudinal notch (along the main axis) (DxWxL)
401mm - 500mm	0.50 x0.1 x 25 mm
501mm - 600mm	0.60 x0.1 x 25 mm

d)Subsurface defects: Drilling (cylindrical) 0.6 mm in diameter, 25mm long, made along the main axis, located 0 -10 mm below the each surface.

Note: For billets of different sizes (8”-9”, 18” & 26”) test sensitivity parameters to be indicated by Tenderer.

15.06 Scalper Unit

The tenderer should guarantee the production rate for producing 90,000 TPA of Cast Products with two shift working for 330 days. However, the tenderer should provide the following data:

a) Feeding rate: _____ mm/min
b)Parallelism after scalping: _____ mm

© 2022 MECON LIMITED. All rights reserved

d) Roughness after scalping: _____ µm

15.07 Sawing Unit

The tenderer should guarantee the production rate for producing 90,000 TPA of Cast Products with two shift working for 330 days. However, the tenderer should provide the following data:

a) Feeding rate: _____ mm/min
b) Maximum cutting range: _____ mm
c) Roughness after sawing: _____ µm

© 2022 MECON LIMITED. All rights reserved

16.0 Certification

The Tenderer shall assist UADNL to obtain the certification required for the supply of cast billets & slabs to the aerospace, defense and aviation sector. Certification required will be as per latest standards like AS 9100:2016, AS 9110, AS 9115 and AS 9120 or equivalent standards established by the Aviation, Space and Defense industry.

© 2022 MECON LIMITED. All rights reserved

17.0 Data / Drawings to be furnished by the Tenderer

17.01 Shop layout and cross-sectional drawings

Overall layout drawing indicating location of different units and its auxiliary units as described in the TS shall be furnished alongwith the bid by the tenderer.

17.02 Technical Details and Operational Data

Description of operational and technical details of each unit shall be furnished by the tenderer indicating technical parameters for each sub-unit of the equipment. The weight of major mechanical and electrical equipment/unit shall also be furnished.

Technical Details:

The tenderer shall furnish the following information and technical details alongwith the bid.

a) Reference dimensional arrangement drawings indicating plan, elevation and sectional view shall be furnished for all the major sub-units for similar equipment supplied elsewhere and analogous foundation drawings of the main sub-units of such installation.

b) Equipment schedule indicating quantity, estimated weights and source of supply (indigenous / imported). The Tenderer shall provide the name of all sub-suppliers who are supplying imported equipment.

c) Level I and Level II automation system architecture.

d) Services, utilities and energy consumption, flow rates (average, minimum and peak), quality and pressure requirements, etc. at the consuming points and at battery limits. Specific consumption of all

© 2022 MECON LIMITED. All rights reserved

consumables (operation and maintenance) including powders, refractories, grease and oil alongwith quality, lining details, etc.

e) List of probable suppliers of the main plant and equipment, hydraulic / lubrication / pneumatic equipment etc.

f) The tenderer shall furnish list of recommended spares for two years operation and also furnish list of special consumable items.

g) Single line power supply of power distribution board/MCC indicating rating and make of switches, fuses, contactors, overload relays, etc.,

h) List of tools and tackles, List of operational spares, commissioning spares and insurance spares.

i) A brief write up on the function, construction, operation and control aspects of the equipment / system offered.

Operational Data:

The following operational data shall be furnished by the tenderer alongwith the bid:

a) Production capacity in terms of hourly rate.

b) Information regarding idle time per cycle, cycle of operations etc.

c) Estimated annual availability of equipment considering mechanical delays, Electrical delays and all other delays.

d) Specific consumption of bulk materials, electric power, water, propane gas, inert gas, air, lubricants, hydraulic oils, services and other consumables along with their grades/specifications.

e) Product quality parameters with respect to cast billets & slab dimensions, internal cracks, surface defects, metallurgical structure etc.

© 2022 MECON LIMITED. All rights reserved

17.03 Utilities and services

The tenderer shall furnish the following information for services and utilities alongwith the bid.

a) Data for industrial quality compressed air such as quantity and pressure requirement.

b) Data for instrument quality compressed air such as quantity pressure, pressure dew point and maximum allowable oil/dust content requirement.

c) Data for propane gas such as quantity, quality and pressure requirement.

d) Data for inert gas such as quantity, quality and pressure requirement.

e) Quantity of supply water and pressure required for the system offered at design limits.

f) Quality of supply water required for the system shall be furnished.

g) Quality, quantity and pressure of return water from the offered system at design limit.

h) Temperature rise of water during the process shall be furnished.

i) Emergency water requirement with quality and pressure with duration shall be indicated.

j) Requirement of hydraulic fluids with specification.

k) Requirement of lubricants with specification.

© 2022 MECON LIMITED. All rights reserved

17.04 Schedule in bar chart form

Bar chart schedule and PERT Network indicating various stages (milestones) for completion of the project / units with indication of major resources envisaged in the following heads covering each unit / sub-unit :-

- Submission of input design data / basic data for civil and building structural work, services / utilities required at battery limits, auxiliary facilities, etc. to enable design and procurement / execution by Purchaser separately.
- Basic engineering of the entire shop.
- Approval of drawings / documents by Purchaser / Purchaser's Consultant
- Design and engineering covered under Tenderer's scope
- Placement of orders
- Manufacture and supply of items
- Technological structural supply
- Electrical and process automation equipment erection (to be done by the Consortium partner)
- Refractory erection of process equipment
- Erection, Testing, trial run and commissioning
- Integrated performance guarantees tests
- List of Consumables
- Manpower Deployment
- Training Schedule

17.05 Fire-fighting Equipment

Requirement of fire-fighting equipment if any.

© 2022 MECON LIMITED. All rights reserved

18.0 Time Schedule for Submission of Drawings & Documents

Time schedule for submission of various drawings and documents for the package is as indicated below. Time of submission and no. of copies of drawings/ documents, etc. are tentative and shall be finalised before signing the contract with successful Tenderer. All documents / drawings shall be supplied in requisite no. of hard copies as given in table below along with 2 soft copies in CDs / DVDs.

A. Drawings / Documents for Approval

Sl. No.	Description	No. of Copies	Time of Submission from effective date of Contract, weeks
1.	List of drawings and documents (for information and to be updated monthly)	10	02
2.	Process Engineering Assumptions and Basic Data	10	04
3.	Process Flow Sheets	10	04
4.	Material Balance Sheet	10	04
5.	General arrangement and shop layout drawings including cross-sections for shops/system/services including equipment disposition and facilities (Purchaser's facilities also to be shown)	10	06
6.	Layout & cross-section of underground facilities such as foundations, tunnels, trenches, basements, etc.	10	6
7.	Civil foundation layout drawings with load data, insert & anchor details for equipment & facilities	10	10 –24
8.	Layout drawings for technological steel structures	10	08
9.	Equipment list indicating weights (To be updated regularly)	10	06
10.	Layout drawings indicating data of EOT cranes	10	06

© 2022 MECON LIMITED. All rights reserved

Sl. No.	Description	No. of Copies	Time of Submission from effective date of Contract, weeks
11.	Equipment GA and major assembly & sub-assembly drawings (including equipment for various services) and Parts list	10	08-26
12.	General arrangement & layout drawings for pipe work & duct work including design calculation	10	08-26
	AFTER APPROVAL All approved drawings and documents	10	Within two (2) weeks after approval

B. Drawings/Documents For Information/Review

Sl. No.	Description	No. of Copies	Time of Submission from effective date of Contract, weeks
1.	Detailed drawings for pipe work and ductwork including Bill of Materials	10	15-30
2.	Tech. structural drawings with Bill of materials	10	12-32
3.	Detailed drawings of equipments including Parts list on separate A4 sheets (in bound volumes)	10	16-32
4.	Performance data, characteristic curves including duty points.	10	18-32
5.	Test & Inspection Certificates	10	
6.	Drawings for approval of statutory authorities	As required	As required
7.	List of equipments& suppliers, their subassemblies is in which deliveries are to be made, their weights, drg. nos. special instruction for storage, erection, etc.	10	20
8.	Instructions for storage and handling	10	20-40
9.	Erection drawings, erection specifications and erection	10	24-60

© 2022 MECON LIMITED. All rights reserved

Sl. No.	Description	No. of Copies	Time of Submission from effective date of Contract, weeks
	instructions		
10.	Refractory lining pattern drawings, drawings for various sizes and shapes of refractories with material specification	10	30-40
11.	Operation, maintenance and safety manuals	10	50-69
12.	List of spares (Operating maintenance and insurance)	10	48
13.	Manufacturing drawings and bill of materials for all spares excluding proprietary items	10	60
14.	Ordering specifications including catalogues and details for all spares including proprietary	10	60
15.	Manufacturing drawings/ordering specifications for operating consumables/supplies/tools & tackles	10	60
16.	Work / Foreign standards in English language	04	Along with relevant drawings/documents

C. Drawings / Documents With Delivery Of Equipment

Sl. No.	Description	No. of Copies	Time of Submission from effective date of Contract, weeks
1.	Test & Inspection Certificates	05	
2.	Assembly & erection drawings and instructions	05	

© 2022 MECON LIMITED. All rights reserved

D. As-Built Drawings and Documents

Sl. No.	Description	No. of Copies	Time of Submission from effective date of Contract, weeks
1.	All drawings, documents, Performance data, design calculations, Test certificates, Standards, etc. listed under A & B	10 + 1 set soft copy for all except for operation, Maintenance & Safety Manuals	Will be submitted progressively within 02 (two) months of Commissioning

18.01 Contract drawings, documents and manuals

18.01.01 Scope

In as much as the Contractor is required to supply design calculations, drawings, documents, schedules, specifications, schemes, manuals and soft copies, he shall furnish the same within the Contract Price to the Purchaser as part of the Contract.

i. Contract specifications and drawings shall be co-ordinated by the Contractor in such a manner that any work shown on the drawings, shall be done by the Contractor without any extra charge. Unless such work is specifically exempted, it is to be executed in accordance with the Contract and in the same manner as if fully specified and shown in detail.

ii. The Contractor shall submit the drawings and documents for the Purchaser's / Consultant's approval and information / review according to the time schedule.

iii. Drawings / documents furnished by the Contractor shall be certified as correct for use and shall bear the signatures of responsible persons of the Contractor whose names shall previously be notified to the Purchaser by the Contractor in writing.

© 2022 MECON LIMITED. All rights reserved

iv. The drawings, documents etc. shall be sent to the addresses of the Purchaser and / or the Consultant. The Contractor will be informed of the details in time by the Purchaser.

18.01.02 Name Plate and Drawing Format

i. The name plates of the drawings to be used shall be furnished to the Successful Tenderer. All drawings shall be dimensioned in the metric system and title and written notations shall be in English.

ii. All drawings submitted by the Contractor shall preferably be 841 x 594 mm (size A1 as per Indian Standards; however A0 size (841 x 1189 mm) and small standard sizes A2, A3, A4 are permitted. The contractor's standard drawings are exempted from the above size limitations, unless his standard drawings include drawings of very large size or length. All design drawings shall be oriented to match the plant arrangement drawings and shall have a key plan identifying the plant area to which they apply. All drawings shall be made with the north arrow pointing to the top of the sheet. Drawings and bills of materials shall give quantities of all materials required for the work and shall be cross referenced for easy identification.

iii. The Contractor's standard drawings used for the Contract shall have information pertaining to the specific item under consideration properly identified to distinguish it from information pertaining to other items which may be contained on the same drawing.

iv. When a drawing is revised by the Contractor, every change made shall be identified on the drawing and not in the covering letters by circling the changes made and placing the revision number in a small triangle so as to be easily recognisable. When a subsequent revision is made, the circles made for the previous revision shall be erased and the current changes circled. However, all revision numbers in the small triangles shall be

© 2022 MECON LIMITED. All rights reserved

retained. In addition, a record of revisions along with the co-ordinates showing the location of revisions shall be indicated at the left hand bottom corner of the drawings as per standard practice.

18.01.03 Numbering System

The Contractor shall use approved numbering system for drawing/document, which shall be furnished to successful Tenderer.

18.01.04 Working Documents on Scope of Supply and Drawings List with Schedule

The Tenderer shall furnish working drawing along with list.

18.01.05 Specification of Works

The specification of works shall be as per technical specification.

18.01.06 Drawings list and schedule:

The Contractor shall supply to the Purchaser requisite no. of copies of a preliminary list of all drawings for plant & facilities, which the Contractor expects to supply against the Contract together with a detailed schedule for submission of the drawings.

i. Shop layout & cross section drawing shall show all the facilities under the scope of the package. This shall be regularly updated indicating the latest status.

ii. Layout & cross section drawings of underground facilities shall show all facilities under this package. This shall be regularly updated to show the latest status.

iii. Drawing list to be submitted and updated monthly shall indicate schedule date of submission. This shall also indicate earlier revisions submitted and their status. It shall indicate total

© 2022 MECON LIMITED. All rights reserved

drawings scheduled to be submitted, actually submitted, total nos. approved, commented etc.

18.01.07 Detailed Engineering Drawings

The Contractor shall submit requisite no. of copies of the equipment general arrangement and layout drawings including cross sections. The general arrangement and layout drawings shall include the following in accordance to the time schedule.

i. For equipment, this category shall include equipment arrangement outlines and overall dimensions, locations of equipment, centerlines and working point elevations, functional and clearance requirements and clearance dimensions. The particulars of refractory and other lining work if any, and of all auxiliaries shall also be included.

ii. The piping drawings shall include flow diagrams of all utilities and process fluids showing flow quantities, temperatures, and pressures, all pumps, valves and instrumentation under scope of this package. The general arrangement and layout drawings for piping and ductwork shall include physical location of equipment and general pipeline / duct routings to avoid equipment and electrical interferences and to make units requiring servicing and maintenance accessible. Both the flow sheets and pipe / duct routing drawings shall show interconnecting pipelines / ducts and terminal points of the Contractor's piping / ducting. The category shall also include diagrams of hydraulic, pneumatic, lubrication, gas, water and any other utility required as per the process technology.

iii. The details furnished shall include necessary design data and design calculations (in A4 size sheets) and shall conform to the provisions of the contract, applicable specifications and acceptable codes of practice.

© 2022 MECON LIMITED. All rights reserved

18.01.08 Equipment Details and Other Drawings and Documents

The Contractor shall submit within the time limits requisite sets of detailed drawings covering such drawings, bill of materials or other documents required for manufacture, fabrication or supply of parts, site installation of piping & ductwork and for all refractory work as well as any other lining work. The detailed drawings shall include, but not be limited to, the following:

i. Dimension drawings showing dimensions required for location of individual equipment including, where necessary, its auxiliaries and control panels with method and details of connections as per agreed schedule.

ii. Assembly, sub-assembly and sectional drawings as well as detailed drawing showing details of components required for assembly as per agreed schedule. These shall be suitably cross referred to other drawings as required. The drawings shall be sufficiently detailed such that, if the Purchaser so desires, he can procure spares and replacements from a suitable component manufacturer in India or abroad. Details of mechanical equipment shall include grades of finish, heat treatment, clearances (tolerances), etc. The electrical drawings shall include layout drawings showing locations of all electrical equipment including motors, controls, limit switches, solenoid valves etc. motor list with ratings, list of electromagnetic valves, single line interlocking and sequence diagrams for control, signaling and communication system, location of devices on switch-gear, control panels, desks etc. including sectional views. The details furnished shall include complete cabling drawings and cable racks, tunnels, conduits etc.

iii. Wherever the equipment or parts of the equipment required special acceptance tests like ultrasonic tests, radiographic tests, vibration measurements etc., either before assembly or after assembly, details of such requirements shall be indicated together with acceptance standards applicable, in relevant

© 2022 MECON LIMITED. All rights reserved

drawings. In the similar manner wherever any special protective coatings are required to be given to obtain longevity of service or other operational needs, detailed, specifications of such coatings, brand names and sources of supply shall be furnished.

iv. In all cases, component drawings and part lists will bear cross reference to detail assembly drawings which in turn will bear cross reference to assembly drawings of Contractor, subcontractors, manufacturers etc. Part lists shall be complete in all respects regardless of the fact whether these have been indicated on the body of the drawing or not, whether detailed manufacturing drawings have been supplied or not or whether these constitute standards machine elements easily available in the market.

v. Part lists shall be arranged as per their interchangeability sub-assembly, sub-group and groups of equipment arranged as per their technical functions. Part lists shall be supplied in a tabulated from preferably, A4 size and shall contain all details possible for spare parts lists.

vi. Performance data including graphs, efficiency and characteristic curves and other pertinent information of the individual / composite items of plant and equipment as per agreed schedule. These shall be finally incorporated in operation and maintenance manuals.

vii. Drawings for approval of statutory authorities such as the State and Central Pollution Control Board, Factory Inspector, Indian Boiler Inspectorate, Inspectorate of Explosives, Electrical Inspector etc, if required, at least 6 months prior to first shipment or sufficiently in advance so as to take care of the statutory clearances required at appropriate time.

viii. The drawings showing refractory work and lining work shall indicate complete details of types of grades of refractories, size and shape of bricks, specifications including physical and

© 2022 MECON LIMITED. All rights reserved

chemical properties, chemical composition, acceptable manufacturing tolerances, methods and steps involved and precautions to be taken while laying the bricks, and complete bill of material for all the refractory materials as per agreed schedule.

ix. A list of wearing parts such as bearings, retainers, gaskets, bolts, chains etc. shall be furnished showing quantities supplied and installed, dimensions, materials used and expected useful life. The information furnished shall include complete specifications for all wearing parts including grades of finish, heat treatment, tolerances etc. Further, manufacturing drawings of components (wearing parts) excluding proprietary item shall be furnished. All these drawings / information shall be supplied as per the agreed schedule.

x. Other drawings, specifications and data including those not described above but required by the Purchaser / Consultant for interfacing purposes at battery limits shall be furnished by the Contractor as and when required by the Purchaser / Consultant during the execution of the contract.

18.01.09 Bills of Materials

Bills of materials shall be supplied along with the drawings to which they pertain and shall include listing of materials being supplied showing piece marks, material of construction, description and reference drawing numbers. Packing lists described in the marking and shipping instructions covered in these General Conditions must have the same identification as shown on the applicable bills of materials.

18.01.10 Assembly and Erection Instructions and Drawings

i. Contractor shall furnish total equipment list indicating equipments requiring erection, subassemblies of equipment in which these are supplied, weights, any special handling or erection devices / materials / tools & tackles required.

© 2022 MECON LIMITED. All rights reserved

ii. Descriptive literature and drawings to illustrate the working principles, method of assembly and dismantling.

iii. Instruction books, drgs for proper erection and assembly of all equipment including necessary instructions for checking and recording proper assembly of the plant and equipment.

iv. Instruction sheets for proper balancing, alignment, checking and calibration as may be necessary.

v. Instructions for re-conservation during storage of individual equipment for varying periods say 6 months, 12 months and 18 months.

18.01.11 Spares List, Maintenance & Operational Manuals

i. The Contractor shall supply requisite sets of spare parts list giving the complete list of all parts required as commissioning spares. In addition, the Contractor shall supply requisite sets of spare parts list giving complete list of replaceable parts for two years' normal operation and maintenance indicating clearly operational, consumable, maintenance, replacement spares, etc. In the maintenance spares list, fast wearing and insurance spares shall be clearly identified. The spare parts lists shall be accompanied by necessary specifications, catalogues and manufacturing drawings (except for proprietary items) and shall be supplied in the form of a table giving item designation and application, name of manufacturer, manufacturer's specification, type and form reference drawing number, standards used, quantity installed, quantity recommended for two years normal operation, unit price. Detailed instructions both for original installation and future replacements shall be furnished.

ii. Requisite no. of copies of maintenance manuals covering all phases of both preventive and repair maintenance shall be supplied, including lubricating charts showing every point

© 2022 MECON LIMITED. All rights reserved

requiring lubrication, grade of lubricant, schedule for lubrication, and where required, the correct amount and grade of oil or grease necessary for refill after drainage. Amongst other things, the maintenance manuals shall contain all details about general specifications about the equipment their functions and system diagrams; required dismantling devices and erection tools; characteristic curves, test certificates, manufactures' technical literature / catalogues of various mechanical and electrical equipment; preventive maintenance schedules; guidelines for undertaking, dismantling, identifying faults, possible reasons and rectification of the same, re-erection with necessary details of precautions and sequence to be observed; instructions for proper balancing, alignment, checking calibration and clearances to be observed and acceptable tolerances. The tabulated part lists and tabulated lists of commonly used machine elements like chains, sprockets, ropes, valves, bearings, coupling model, type, size, number built in, manufacturing firm, number of spares recommended etc. shall also be included if not already supplied in a separate volume.

iii. Requisite no. of copies of operation manuals shall be supplied including all operating instructions and details necessary to ensure proper procedure and sequence of operation. Amongst other things, the operation manual shall contain details like specifications, designed capacities and speeds, flow diagrams, general features and specifications of input and output conditions of material being handled, operating characteristics, guidelines for proper and safe operation precautions procedures and sequence for proper start up and stoppage, management shall also be spelt out clearly.

iv. All manuals, documents, spare parts lists, etc. shall be supplied in substantially bound volumes.

© 2022 MECON LIMITED. All rights reserved

18.01.12 Approval of Drawings

i. It is understood that approval by the Purchaser / Consultant does not include checking for drafting and other errors, but only review of basic concepts and general principles involved.

ii. Approval of the Contractor's drawings shall not relieve the Contractor of his responsibility to comply with the intent of the contract. Manufacture / fabrication or procurement prior to approval of drawings shall at the Contractor's risk.

iii. The Contractor shall submit drawings for approval in number of prints as specified. If the drawing is approved, one print will be returned to the contractor. If the drawing is "Not Approved" or "Approved as Noted" one marked up print with appropriate comments will be returned to the Contractor for correction and resubmission. The Contractor shall resubmit the final drawing incorporating all the changes within 1.5 weeks after receipt of drawing with comments. The approved drawing shall be re-submitted in requisite no. of prints, unless otherwise required by the purchaser. In case additional copies of approved drawings are required by the Contractor, he shall submit more number of copies to the Purchaser / Consultant for approval than those specified in the Contract.

iv. Upon approval by the Purchaser, the drawings shall become contract drawings and thereafter the Contractor shall not depart from them in any way whatsoever except with the written permission of the Purchaser.

18.01.13 Drawings / Documents with delivery of Equipment

With the delivery of Equipment, the contractor shall submit requisite no. of sets of all test and inspection certificates, along with invoices. Requisite no. of sets of test and inspection certificates arranged in

© 2022 MECON LIMITED. All rights reserved

classified manner in bound volumes shall be submitted after completion of work for records as per agreed schedule.

18.01.14 Drawings and Documents at Completion of Work

i. The Contractor shall supply for all items supplied by him or his sub-contractors the following as per agreed schedule:

ii. One reproducible as soft copy in 'CD' along with requisite no. of prints of each original drawing, specification, bill of materials etc. made by the Contractor or his sub-contractors, incorporating changes, if any, made during execution/implementation .

iii. One set of design data and design calculations made by the Contractor or his sub-contractors shall be furnished in CD and suitably indexed to facilitate reference for undertaking modification / extension work at a future date, along with requisite no. of hard copies in bound volumes. The design calculations for different disciplines e.g. technological, structural steel works, utilities, mechanical shall be submitted in separate volumes.

iv. All work standards / foreign standards in English language excluding IS specifications and codes referred to or relied upon in Design Calculations and various drawings. These shall be properly indexed and neatly filed in hard binders.

v. Requisite no. of sets of all documents after incorporating latest revisions shall be furnished in neat substantially found volumes and shall be suitably indexed and arranged to facilitate reference.

vi. The contractor shall submit various drawings and documents covered in this Schedule as per time schedule.

© 2022 MECON LIMITED. All rights reserved

19.0 Training of Purchaser Personnel

19.01 General

The Tenderer shall transfer the latest standards of Aluminium alloy plant technology by imparting the training to Purchaser personnel and by providing respective documentation. Tenderer shall render training to purchaser's personnel for operation and maintenance of the equipment both on-site & off-site and other related aspects in the following areas:

- Metallurgy
- Process technology
- Quality control
- Operation of Melting & Holding Furnace, VDC Casting Machine, Homogenising Furnace and Sawing & scalping machine
- Electrics & automation
- Level I & II automation
- Hydraulics
- Water system
- Maintenance
- Refractory Lining technique
- Commissioning, etc

The details of training programme along with duration based on on-site & off-site training shall be indicated in the offer.

19.02 Offsite training

Off site training will be carried out in operating melting and casting plants employing similar equipment or that being supplied to Purchaser. The duration of overseas site training shall be for a period of 60 man weeks (to be decided mutually with the successful bidder) and the training shall be in batches. This shall be for Melting & Holding furnace, VDC casting machine, Homogenising unit for billets & slabs,

© 2022 MECON LIMITED. All rights reserved

Scalping & Sawing unit and ultrasonic inspection system for slab covering all the areas as mentioned above clause no 19.01. In addition, about 40 man-weeks (to be decided mutually with the successful bidder) training schedule in India may be planned for indigenous supplies of equipment.

Off site training will be executed in Tenderer's and sub-Tenderer's premises of Purchaser's maintenance personnel and operation personnel with key functions. Practical and theoretical training will be included and will follow the works routine or course schedules. Management aspects will be addressed to Purchaser's upper and middle shop management. All necessary training manuals in English language will be supplied to the trainees.

Off-site training will broadly cover the different area of the melting & casting plant. Each section will be covered regarding the following subjects.

- Design considerations
- Operation and maintenance
- Control and sequencing requirement including automation
- Basic concept of monitoring energy consumption
- Special safety aspects
- Any other area not specifically mentioned but required.

The knowledge gained will be adapted to the plant and operation situation at site.

19.03 Onsite training

While basic induction training for all categories of staff and for all job positions will be provided by the Purchaser, the Contractor shall identify from the manpower requirement, the key positions and number of persons to be trained for manning the key areas for plant and

© 2022 MECON LIMITED. All rights reserved

equipment offered. Purchaser will depute personnel with appropriate qualifications and experience for imparting training.

On-site shall be conducted by the Tenderer on the following:

- Process, automation and Operation
- Quality control
- Maintenance covering all related areas.

On-site training for owner's 20 nos. of persons for operation and maintenance from all discipline in 3 batches to be imparted by the tenderer at site. The same is to be mutually agreed upon.

19.04 Training Programme & Training Schedule

The Contractor shall arrange for training of the Purchaser's personnel equipment under his scope of supply. The Contractor shall furnish a training programme including areas of training, speciality-wise placement of trainees, place of training, man-weeks and schedule for training at least six months before commencement of training. The date of assessment of training will be mutually discussed and agreed upon.

The Contractor shall furnish final training programme for Purchaser's personnel well in advance of their arrival at the place of training. The training programme can be modified by the Purchaser in consultation with the Contractor depending upon the Purchaser's actual requirement. However, the date commencement of training shall be fixed only on receipt of confirmation from the Purchaser.

The language of communication & training material shall be English.

19.05 Training Materials

The Contractor shall supply all training documents / materials (training manuals, instructions and other connected literature / documents) in six copies to the Purchaser in English language alongwith the detailed

© 2022 MECON LIMITED. All rights reserved

final training programme. Training documents prepared shall meet the equipment of various groups to be trained. The Purchaser reserves the right to suggest for improvement in the training material if these are not meeting the training needs of the Purchaser's personnel. On start of training, each trainee shall receive one copy of agreed training materials (training manual, instructions and other connected literature / documents). Additionally 6 copies of final training materials will be submitted to the Purchaser at the end of the training.

19.06 Objective of Training

The general and special operating knowledge and experience will be transferred through training comprising work procedures supplemented by special verbal and / or written operating and test specifications and disclosure of specific operating performance data in accordance with practices followed by the Contractor.

The outlined training shall introduce / expose Purchaser's personnel to the general understanding of the operation, and maintenance of equipment.

The design engineering and project personnel of the Purchase will be trained to familiarise with the functional and control features of the equipment.

The objective of the training is, thus, to familiarise Purchaser's personnel with :

i) Possible operating situations associated with maintenance.
ii) Fault-finding, diagnostic approach to trouble-shooting and measures adopted in case of troubles.
iii) The overall technology of the equipment under operating conditions.
iv) Design features of the equipment.

© 2022 MECON LIMITED. All rights reserved

20.0 Painting

Before dispatch to site, surface of all fabricated equipment/components / accessories which are to be painted shall be thoroughly cleaned of rust, scales grease etc and be painted with two coats of proper under coat as well as for colour identification for non-fabricated equipments. This shall be followed by two coats of finish paint of the color specified /approved by the purchaser at manufacturer's place. Damage to the painting suffered during transit /erection shall be made good by the successful tenderer free of cost before the equipment is finally accepted by the purchaser.

The paint shall provide a continuous adherence film on the surface being treated and protected from atmospheric and environmental corrosion. The following items shall be covered under painting work.

i. Structural steel work, if any.
ii. Structural steel work for technological structures etc.
iii. Technological equipment
iv. Mechanical equipment
v. Electrical equipment including motors, transformers, switchgears, control panels, etc.
vi. Tank and vessels
vii. Pipe work and ducting including supports, hangers etc.
viii. Auxiliary equipments/ units as envisaged

The details of painting requirement are given in General Technical Specification (GS-09) and shall be followed.

© 2022 MECON LIMITED. All rights reserved

21.0 Disaster Management Plan

The Tenderer shall develop & submit a contingency plan to sustain working of vital equipment under the following extreme conditions:

i) Power failure
ii) Water supply failure
iii) Metal break-out / heavy splash of metal
iv) Explosion
v) Fire hazard
vi) Other adverse conditions
vii) Casting break-out
viii) Furnace break-out

Emergency conditions arising out of power at melting & casting area are listed below:

21.01 Water Cooling

In case of power failure, emergency water from the emergency overhead water tank will flow for various cooling circuits of the casting machine for about 20 - 25 minutes minimum or as per design calculation of the tenderer. The emergency water will flow through the essential equipments like mould machine and spray cooling circuits, etc and thus prevent the machine from thermal damage caused by solidifying strand in the machine.

© 2022 MECON LIMITED. All rights reserved

22.0 QUESTIONNAIRES

22.01 General

One copy of the filled-up questionnaire shall be submitted alongwith each copy of the tender. Consolidated information is desired to facilita tetender processing. The information / data furnished will form a part of the contract with the successful tenderer. The questionnaire does not supersede any instructions in tender documents relating to the descriptive and other information to be submitted with the offer for a complete understanding of the equipment offered and its operation.

A. General information

1.	Tenderer's name and address	
2.	Contact Tel. no., Fax no. & email ID, website, if any	
3.	Deviation from specifications and tender document	Yes / No
4.	Exclusion list indicating item details required for completeness of the equipment, its safe operation and maintenance but not included by the Tenderer	
5.	Time schedule - Tenderer shall give details of activity wise schedule from issue of LOI to trial runs, commissioning, PG test to be undertaken by Tenderer	
6.	Spares list Tenderer shall give details of spares for maintenance and operation of equipment - Commissioning spares - Two years spares for all supplied equipment	
7.	List of consumables Tenderer shall give details of consumables required for completion of first 200 heats after PG test	
8.	Manpower requirement Details list of manpower to be deployed for operation and maintenance of equipment	

© 2022 MECON LIMITED. All rights reserved

9.	Training Tenderer shall give details of training programme w.r.t. to - Operation of equipment proper - Maintenance of equipment proper - Safety aspect	
10.	Consolidated consumption of power in terms of metal cast	Preferably in Kwh/t of finished product.

B. Equipment Wise followings details shall be furnished by the bidder:

I	**Melting Furnace**	
1.	**Furnace major dimensions will be a follows**	
	Bath size	---- mm x mm
	Metal depth	---- mm at centre of bath
	Space above metal bath	---- mm
	Overall furnace height	---- mm
2.	Discharge spout height (To suit a height such that molten metal bottom level on the common discharge launder at 3m distance from centre line.)	
3.	Heat input	
	Melting Burners (Adequate no. of burners of suitable capacity for specified melt rate)	
4.	Combustion air fan	1 No. for each furnace
	Capacity	
	Pressure	
	HP rating of drive motor (Suitable energy efficient motor)	
HYDRAULIC TILTING SYSTEM		
1	Oil tank	
2	Heat exchangers	
3	Piping & valves	
4	First fill of hydraulic oil and loss during commissioning	
5	Maximum tilting angle	
6	Normal tilting angle	
7	Safe automatic descending of furnace in the event of power failure	
8	Metal flow rate (based on 10t/h maximum	

© 2022 MECON LIMITED. All rights reserved

	casting speed)	
9	Maximum tilting rate for up and down movement	
II	**Holding Furnace**	
1.	Furnace major dimensions will be a follows	
	Bath size	---- mm x mm
	Metal depth	---- mm at centre of bath
	Space above metal bath (To be indicated by the Tenderer)	---- mm
	Overall furnace height (To be indicated by the Tenderer)	---- mm
2.	Discharge spout height (To suit a height such that molten metal bottom level on the common discharge launder at 3m distance from centre line.)	
3.	Heat input	
	Holding Burners (Adequate no. of burners of suitable capacity for holding molten metal at 730 $\pm 5^0$C)	
4.	Combustion air fan	1 No. for each furnace
	Capacity	
	Pressure	
	HP rating of drive motor (Suitable energy efficient motor)	
HYDRAULIC TILTING SYSTEM		
1	Oil tank	
2	Heat exchangers	
3	Piping & Valves	
3	First fill of hydraulic oil and loss during commissioning	
4	Maximum tilting angle	
5	Normal tilting angle	
6	Safe automatic descending of furnace in the event of power failure	
7	Metal flow rate (based on 10t/h maximum casting speed)	
8	Maximum tilting rate for up and down movement	
III	**Homogenizing Furnace**	
1.	**Basic furnace (inside useful dimensions)**	
	Useful length	
	Useful width	
	Useful height	

© 2022 MECON LIMITED. All rights reserved

	Overall outside dimensions (Approx.)	
	Length	
	Width	
	Height (above floor level)	
2.	**Heat treatment cycle time (hrs.)**	
	Charging	As per operation
	Heating	
	Soaking	
3.	Nos. of zones	
4.	Furnace KW rating of heaters (total)/burner connected load	
IV	**Launders between holding furnace and VDC**	
1.	Recommended Temperature at Battery limit for receipt of metal in launder.	
2.	Cross Sectional size of Launder	
3.	Launder Refractory Material & Thickness	
4.	Launder Plate Material & Thickness	
5.	Launder cover	
6.	Skin Temperature of Launder	
7.	Type of Metal Level Controller	
8.	Launder heating system	
V	**Grain Refining System**	
1.	Speed of rod feeder (Range)	
2.	Consumption of wire rod per ton of hot metal	
3.	Diameter of rod	
4.	Weight of wire rod coil to be fed	
5.	Composition of rod	
6.	Relevant operational parameters, in case, other system has been offered.	
VI	**Metal Degasser**	
1.	Type of De-gasser	
2.	Metal Flow rate – Maximum & Minimum	
3.	Number of Rotors	
4.	Rotor Material (shaft, blade etc.), if offered	
5.	Rotor Speed Range	
6.	Rotor Lubrication System	
7.	Degasser refractory material	
8.	Motor rating	
9.	Gas consumption details	
10.	Inlet pressure for each gas used	
11.	Flow rate for each gas used	
12.	Operating Temperature range	

© 2022 MECON LIMITED. All rights reserved

13.	Degasser heating system, if any	
14.	Final H_2 level (using N_2 gas as degassing media)	
15.	Weight of complete degassing unit	
16.	Dimension of complete Degasser Unit	
17.	Relevant operational parameters, in case, other system has been offered.	
VII	**Metal Filtration System**	
1.	Filter Material	
2.	Life of filter (in terms of metal passed)	
3.	Pore density	
4.	Filter cake arrangement (Horizontal / Vertical)	
5.	Metal velocity through the filter	
6.	Pressure drop between inlet and outlet of filter	
7.	Operating Temperature range	
8.	Dimensions & wt. of filtration unit	
9.	Refractory material used	
10.	Heating arrangement	
11.	Relevant operational parameters, in case, other system has been offered.	
VIII	**Dross Collection and Processing Unit**	
1.	Type of Dross Collection and Processing Unit	
2.	Pulverizer Mill	
3.	Equipment for Screening Cold Dross	
4.	Eddy Current Separator	
5.	Relevant operational parameters, in case, other system has been offered.	
IX	**Vertical Direct Chill Casting Machine**	
A.	**Casting Cylinder**	
1.	Total lifting capacity	
2.	Type of casting cylinder	
3.	Coating around cylinder surface	
4.	Type of Internal guidance system	
5.	Piston/Ram material	
6.	Piston/Ram diameter	
7.	Stroke	
8.	Design pressure	
9.	Test pressure	

© 2022 MECON LIMITED. All rights reserved

10.	Required external load (platen, tooling) to get a start pressure in top position	
11.	Maximum cylinder load	
12.	Cast speed range	
13.	Maximum lifting speed (w/o load)	
14.	Angle of rotation over full stroke without load and torque	
15.	Hydraulic fluid	
16.	Maximum operation temperature	
17.	Horizontal platen deflection	
18.	Rotational tolerance	
B.	**Torque Limiter**	
1.	Material	
2.	Maximum Torque bearing capacity	
3.	Number of shear pins required	
4.	Cylinder Mounting Rings	
5.	Leveling Wedges	
C.	**Position verification sensors**	
1.	Number of sensors	
2.	Type of sensors	
D.	**Hydraulic Power Unit**	
a)	**Volume Pump**	
1.	Type of Volume pump	
2.	Pump discharge capacity	
3.	Pump discharge pressure	
4.	Motor rating	
5.	No. of pumps	
b)	**Vane Pumps**	
1.	Type of Vane pump	
2.	Pump discharge capacity	
3.	Pump discharge pressure	
4.	Motor rating	
5.	No. of pumps	
c)	**Hydraulic fluid reservoir**	
1.	Size of Hydraulic fluid reservoir	
2.	Material of Hydraulic fluid reservoir	

© 2022 MECON LIMITED. All rights reserved

d)	**Hydraulic Logic circuit**	
1.	Type of valves	
2.	Number of valves	
e)	**Cast speed circuit**	
1.	Type of valves	
2.	Number of valves	
3.	Motor Rating	
4.	Type of flow meter	
5.	Flow control Accuracy required	
6.	Hydraulic oil level indicators	
7.	Number of pressure gauges	
8.	Range of pressure gauges	
9.	Type of filter clogging indicator for closed loop filtration system	
10.	Type of filter clogging indicator for cast speed control circuit	
11.	Emergency cast circuit and related equipments	
12.	Relevant operational parameters, in case, other system has been offered.	
E.	**Mold Table Assembly (for slabs)**	
1.	Number of strands	
2.	Table to accommodate slab of dimension	
3.	Water hose connection per stand	
4.	Mold table movement mechanism	
5.	Type of Mold table alignment system	
6.	Mold water control system	
7.	Type of Coating applied	
8.	Approximate external dimension	
F.	**Mold Table Assembly (for billets)**	
1.	Number of strands	
2.	Table to accommodate billet of dimension	
3.	Water hose connection per stand	
4.	Mold table movement mechanism	
5.	Type of Mold table alignment system	
6.	Mold water control system	
7.	Type of Coating applied	
8.	Approximate external dimension	
G.	**Distribution trough**	

© 2022 MECON LIMITED. All rights reserved

1.	Number of walls in trough	
2.	Specification of outer walls of trough	
3.	Specification of inner walls of trough	
4.	Refractory	
5.	Type and number of Trough Preheater	
6.	Heat shield	
7.	Head sensors	
8.	Pin positioners	
9.	Type of Trough movement mechanism	
10.	Number and Type of Spout heaters	
11.	Rating of spout heaters	
12.	Alarming system for spout heaters	
13.	Indicators for control pin heating	
14.	Type of level sensors for maintaining level of molten metal in mold bore and its specifications	
H.	**Starting Head base assembly (for slabs)**	
1.	Design of head base assembly	
2.	Material	
3.	Coating applied	
4.	Approximate external dimension	
5.	Starting head alignment system	
6.	Number and type of Mold table cover plates	
7.	Number and type of Starting head base cover plates	
I.	**Starting Head base assembly (for billets)**	
1.	Design of head base assembly	
2.	Material	
3.	Coating applied	
4.	Approximate external dimension	
5.	Starting head alignment system	
6.	Number and type of Mold table cover plates	
7.	Number and type of Starting head base cover plates	
J.	**Molds (for slabs)**	
1.	Dimension of molds	
2.	Number of molds	
3.	Type of Cooling technology	

© 2022 MECON LIMITED. All rights reserved

4.	Type and number of oil/graphite spray injectors	
5.	Material and profile of bore	
6.	Material of mold	
7.	Type and number of water filter screens	
8.	Wiper assembly if any	
9.	Type of Mold alignment system	
K.	**Molds (for billets)**	
1.	Dimension of molds	
2.	Number of molds	
3.	Type of Cooling technology	
4.	Type and number of oil/graphite spray injectors	
5.	Material and profile of bore	
6.	Material of mold	
7.	Type and number of water filter screens	
8.	Wiper assembly if any	
9.	Type of Mold alignment system	
L.	**Cooling water control**	
1.	Type of water flow control valve	
2.	Number of water flow control valve	
3.	Specification of valve i.e., size based on pressure etc.	
4.	Type of water shut off valve	
5.	Type of flow meter	
6.	Equipment for water temperature measurement	
7.	Number and Type of Emergency water valve	
8.	Type of Water cleaning system/ strainer	
9.	Pit water level control system	
M.	**Launder metal level control**	
1.	Type of sensors	
2.	Range of sensors	
3.	Protection for sensors and cooling media if any	
4.	Number of sensors	
5.	Position of sensors	
6.	Type of Launder dams	

© 2022 MECON LIMITED. All rights reserved

7.	Number of Launder dams	
8.	Position of Launder dams	
9.	Refractory for Launder dams	
N.	**Steam Exhaust Plenum**	
X	**Ultrasonic Inspection System (for slabs and billets)**	
1.	Type of Ultrasonic Inspection System	Inline & Offline
2.	Test Sensitivity	
a)	---- For internal Imperfections	
b)	---- For Surface Imperfections	
3.	Technology used	
4.	Number of UT probes	
5.	Number of EC probes, if provided	
6.	Lifetime of probe	
7.	Couplant	
8.	Pre-wetting/ Cleaning unit	
9.	Couplant distribution unit including filtration	
10.	Payload and Supplementary payload	
11.	Number of axes	
12.	Sound Level	<85 dB
13.	Weight of complete Ultrasonic Testing unit	
14.	Dimension of complete Ultrasonic Testing unit	
15.	Relevant operational parameters and necessary equipments as per the System provided	
XI	**Scalper (for both slabs and billets)**	
1.	Type of Scalper	
2.	Spindle Material	
3.	Spindle Power	
4.	Feeding Rate	
5.	Depth of cut	
6.	Mandrel/ Main Mill Group	
7.	Side Mills, if required	
8.	Entry, Intermediate and Exit Roller way/ Table	

© 2022 MECON LIMITED. All rights reserved

9.	Rolling Turnover Device	
10.	Roughness of finished surface	
11.	Parallelism after milling	
12.	Self adjusting system	
13.	Cross transfer unit	
14.	Tools Lubrication System	
15.	Weight of complete Scalping unit	
16.	Dimension of complete Scalping unit	
17.	Relevant operational parameters, in case, other system has been offered.	
XII	**Band Sawing Machine (for both slabs and billets)**	
1.	Type of Band Saw M/c	
2.	Cutting Capacity	
3.	Blade Size	
4.	Blade Motor Rating	
5.	Blade Speed	
6.	Blade Lifetime	
7.	Cutting Axis (Whether single or multiple)	
8.	Feeding Speed	
9.	Accuracy	
10.	Roughness of finished surface	
11.	Output (Number of slabs and/or billets/hr)	
12.	Cutting Fluid Type	
13.	Cutting Fluid Pump	
14.	Entry, Intermediate and Exit Roller way/ Table	
15.	Rolling Turnover Device	
16.	Self-adjusting system	
17.	Cross transfer unit	
18.	Tools Lubrication System	
19.	Weight of complete Band Sawing unit	
20.	Dimension of complete Band Sawing unit	
21.	Relevant operational parameters, in case, other system has been offered.	
XIII	**Chips Collection System**	
1.	Type of Chips Collection System	
2.	Specification of Fan and Venturi System	

© 2022 MECON LIMITED. All rights reserved

3.	Suction Pipe and Supporting Structure	
4.	Type of Chips Compactor System	
5.	Relevant operational parameters, in case, other system has been offered.	
6.	Type of Chips Transfer Unit	
XIV	**Operational and maintenance tools**	Enclose list
XV	**Spares & consumables**	
1.	Complete commissioning spares as well as spares and consumables for 3 months operation and maintenance included in offer (including electrode paste, hydraulic fluid, lubricants, refractories, etc.)	
2.	List of commissioning spares and consumables	Attach list
3.	List of spares and consumables for two years of normal operation	Attach list
XVI	**Services Requirement for each unit and equipment**	
1.	Compressed air requirement	
a)	Flow rate, Nm^3/min	
b)	Whether intermittent or continuous	
c)	Pressure, kg/cm^2	
d)	Quality	
2.	Instrument air requirement	
a)	Type	
b)	Pressure, kg/cm^2	
c)	Flow rate, Nm^3/min	
d)	Whether intermittent or continuous	
3.	Cooling water requirement (both industrial and soft water make up)	
a)	Flow rate, Nm^3/min	
b)	Pressure, kg/cm^2	
c)	Temperature at inlet, ^0C	
d)	Temperature rise, max ^0C	
e)	Required Quality (give hardness, pH value, residual contents of suspended solids, particle size, settling time, etc.)	
4.	Emergency water requirement	
a)	Flow rate, m^3/h	
b)	Pressure, kg/cm^2	
c)	Duration, min	
5.	Nitrogen/Argon Requirement	
a)	Flow rate, Nm^3/min	
b)	Pressure, kg/cm^2	

© 2022 MECON LIMITED. All rights reserved

c)	Quality	
6.	Propane/Natural Gas Requirement	
a)	Flow rate, Nm^3/min	
b)	Pressure, kg/cm^2	
c)	Quality	
d)	Whether intermittent or continuous	
7.	Any other requirement	

© 2022 MECON LIMITED. All rights reserved

MECON LIMITED
RANCHI- 834002

(A Government of India Enterprise)

A House of Engineering Excellence
…….Aiming Beyond

CIN NO. : U74140JH1973GOI001199

Vivekananda Path, Doranda, Ranchi – 834002, Jharkhand, India
Phone : +91-651-24830000, Fax : +91-651-2482189/2482214
E-mail : ranchi@meconlimited.co.in, Website : http://www.meconlimited.co.in

UTKARSHA ALUMINIUM DHATU NIGAM LIMITED

ESTABLISHING FACILITY FOR ALUMINIUM ALLOY MELTING, SLAB CASTING AND FLAT ROLLED PRODUCTS PRODUCTION FACILITY

GENERAL TECHNICAL SPECIFICATION

(GTS)

MECON LIMITED
RANCHI - 834002

No. MEC/S/11/35/Q7R6/GTS/01/R0 **JUNE' 2022**

LIST OF CONTENTS

Chapter No.	Description	Pages
GS - 01	General Instruction to Tenderer	1 - 13
GS - 02	Fluid System	
	Part I – Water System	1 - 205
	Part II – Gases & Liquid Fuels	1 - 44
GS – 03	Electrics, Drives & Control & Communication	
	Part-I (Section-A) : Design Basis	1-46
	Part-I (Section-B) : Equipment Specification	1 - 227
	Part-I (Section-C) : Earthing, Lighting Protection, Erection & Testing	1 - 27
	Part-II : IP based Plant Communication, CCVM & Fire Detection and Alarm System	1-69
GS - 04	Instrumentation & Control	1 - 55
GS – 05	Quality System, Inspection & Test of Plant/Equipment at Manufacturer's Premises	1 - 7
GS - 06	Steel Structures	1 - 50
GS – 07	Civil Works	1 - 443
GS – 08	Air Conditioning, Ventilation and Air Pollution Control system	1 - 128
GS – 09	Painting	1 - 21
GS – 10	Hydraulics & Lubrication	1 - 49
GS – 11	Storage and Erection	1 - 16
GS - 12	Fire Fighting System	1 - 69
GS - 13	Material Handling Equipment	1 - 100
GS - 14	Preferred Makes	1 - 53

© 2022 MECON Limited All rights reserved

UTKARSHA ALUMINIUM DHATU NIGAM LIMITED

ESTABLISHING FACILITY FOR ALUMINIUM ALLOY MELTING, SLAB CASTING AND FLAT ROLLED PRODUCTS PRODUCTION FACILITY

GENERAL TECHNICAL SPECIFICATION FOR GENERAL INSTRUCTION TO TENDERER (GS – 01)

MECON LIMITED
RANCHI - 834002

No. MEC/S/11/35/Q7R6/GTS/01/R0 **JUNE' 2022**

LIST OF CONTENTS FOR GS - 01

Sl. No.	Description	Page No.
01.	Intent of Specification	2
02.	General	2 - 3
03.	Site Conditions and Infrastructure Facilities	3 - 4
04.	General Rules and Regulations	4
05.	Standard	5 - 6
06.	Safety	6 – 8
07.	Drawings and Documents	8 - 12
08.	Progress Report	12
09.	Coding Scheme	12
	Enclosure	
01	Annexure-I – Title Block of Drawing	13

© 2022 MECON Limited All rights reserved

01. INTENT OF SPECIFICATION

The purpose of this general specification is to provide the Contractor with certain general information on the location and conditions existing at site and to lay down common guidelines and specifications which the Contractor shall follow in designing of the plant and during execution of work as applicable as per his scope of work

MECON LIMITED, have been appointed by the Purchaser for rendering the detailed engineering and consultancy services for setting up the project.

The General Technical Specification has been divided into the following:

GS - 01	:	General Instruction to Tenderer
GS - 02	:	Fluid System
GS - 03	:	Electrics
GS - 04	:	Instrumentation
GS - 05	:	Inspection
GS - 06	:	Steel Structures
GS - 07	:	Civil
GS - 08	:	Air Conditioning & Ventilation System and Air Pollution Control system
GS - 09	:	Painting
GS - 10	:	Hydraulics
GS - 11	:	Storage and Erection
GS - 12	:	Fire Fighting System
GS - 13	:	Material Handling
GS - 14	:	Preferred Makes

02. General

The facilities envisaged, the conditions of site, etc have been described in the Technical Specification for the package.

© 2022 MECON Limited All rights reserved

Wherever applicable, the contractor should visit the site and satisfy himself of the site conditions and get conversant with other relevant matters.

03. Site conditions and infrastructure facilities

03.01 Site conditions

03.01.01 Location

The proposed Aluminium Alloy Melting, Slab Casting And Flat Rolled Products Production Facility for M/s Utkarsha Aluminium Dhatu Nigam Limited (UADNL) is to be installed at Bodduvaripalem Village, Kodavalur Mandal, SPSR Nellore Distt. in Andhra Pradesh.
It is situated at a latitude 14.436255 N and Longitude 79.969225 E.

03.01.02 Meteorological Data

The meteorological data of Nellore area is as following:

Air Temperature

Maximum temperature	:	43.4 ^{0}C
Minimum temperature	:	17.8 ^{0}C
Daily Average temperature (Max)	:	33.65 ^{0}C
Daily Average temperature (Min)	:	24.8 ^{0}C

Relative Humidity

Maximum	:	87 %
Minimum	:	49 %
Annual Average	:	69 %

Rainfall

Average annual	:	1042.1 mm

Wind

Predominant wind directions	:	WNW, W and E

03.02 Infrastructure facilities outside the plant

03.02.01 Railway

Padugupadu railway station is the nearest railway station from Bodduvaripalem. The straight line distance from Bodduvaripalem to Padugupadu railway station is around 10 Km. The nearest railway station and its distance from Bodduvaripalem are follows:

© 2022 MECON Limited All rights reserved

- Padugupadu railway station (10 KM.)
- Settigunta railway station (14.0 KM.)
- SPSR Nellore railway station (14 KM.)
- SPSR Nellore South railway station (16.0 KM.)
- Bitragunta railway station (20 KM.)

03.02.02 Road

The proposed site is well connected with road as it is situated adjacent to NH-5 (Nellore – Vijaywada Highway).

04. General rules and Regulations

04.01 General rules and regulations

04.01.01 All plant units with respect to their location, layout, general arrangement and design of equipment, structural design, etc. shall be safe to the personnel and conform to the relevant statutory requirements issued by Andhra Pradesh Government and the Government of India but not limited to the following.

- Andhra Pradesh State Factory Rules/Acts.
- Indian Electricity Rules/Acts
- Electricity Regulatory Commission Act
- Indian Petroleum Regulations/Acts
- Indian Boiler Regulations/Acts
- Indian Explosives Acts
- Gas Cylinders Rules/Acts
- Carbide of Calcium Rules/Acts
- Static and mobile Pressure Vessels Codes (unfired) Rules/Acts
- Fire Protection Manual issued by Tariff Advisory Committee (India)
- Pollution Control Regulations/Acts

04.01.02 Pollution control measures shall be provided considering the latest norms and international standards. These should satisfy the stipulations of Central Pollution Control Board and Department of Environment and Forest, Government of India.

05. Standard

05.01 Preferred makes of equipment & supplies

To restrict/minimise stock/inventory of spares, the Purchaser will limit the makes of equipment & supplies to those listed in the "preferred makes of equipment and supplies" unless other-wise expressly so agreed.

© 2022 MECON Limited All rights reserved

05.02 Unit of measurement

All dimensions & weights shall be given in metric system.

05.03 Language

All drawings, documents, etc. shall be in English language.

06. Safety

06.01 Safety regulations

06.01.01 The Contractor shall comply with the, relevant Safety Rules and Regulations but not limited to the following:

- Andhra Pradesh State Factory Rules/Acts.
- Indian Electricity Rules/Acts
- Electricity Regulatory Commission Acts
- Indian Petroleum Regulations/Acts
- Indian Boiler Regulations/Acts.
- Indian Explosive Acts
- Gas Cylinder Rules/Acts
- Carbide of calcium Rules/Acts.
- Static and Mobile Pressure Vessels codes(Unfired) Rules/Acts
- Fire protection manual issued by Tariff advisory committee (India)
- Pollution Control Regulations/Acts

06.01.02 Strict attention shall be paid to all statutory regulations and safety rules for prevention of accidents.

06.01.03 The safety posters/regulations for prevention of accidents shall be displayed by the Contractor at appropriate places. Notices and warning signs shall be displayed for all sources of dangers.

06.01.04 The Contractor is not permitted to construct any temporary road crossing on the rail tracks for the sake of their convenience at work site.

06.01.05 When the work is carried out at night or in the obscure day light, adequate arrangements for flood lighting in the working area shall be made by the Contractor at his own cost and got approved by the Purchaser.

06.01.06 All handling/transport and rigging equipment including lifting tools and tackles shall be checked at regular intervals and kept in good and safe working condition.

A register is to be maintained regarding the results of periodical tests/checks and other particulars in respect of each and every such equipment.

© 2022 MECON Limited All rights reserved

06.01.07 The Contractor must take sufficient care in moving his construction plant and equipment from one place to another, so that those do not cause any damage to the property of the Purchaser or obstruct construction activities of other Contractors.

06.01.08 The Contractor shall depute a full time safety engineer who will exclusively look after all the jobs pertaining to safety at site and keep close liaison with Purchaser/Consultant. He will be responsible for maintaining safe working conditions at site, promoting safety consciousness among the workmen and reporting to concerned authorities in case of accident/dangerous occurrences.

06.01.09 Before execution of work in hazardous area like

- Gas contamination
- Working at height.
- Storage of inflammable materials
- Danger of electric shocks
- Explosion risks
- Excavations more than 2 m deep, etc.

A protocol should be prepared in association with the concerned agencies of the Purchaser/Consultant.

06.01.10 Bidder should submit MSDS (Material Safety and Disposal System) for all hazards materials and chemicals.

06.02 Safety while working with explosives.

06.02.01 Explosives shall not be used on the work site by the Contractor without the written permission of the Purchaser and that too only in the manner and to the extent to which it has been prescribed.

06.02.02 Explosives shall be stored in special premises approved by the Purchaser and at the cost of the Contractor who shall be liable for all damages, loss or injury to any person or property and shall be responsible for complying with all statutory obligations in these respects.

06.03 Safety appliances

06.03.01 The Contractor shall provide the safety appliances conforming to the relevant Indian standards to all their workmen and supervisors engaged by them as well as by the sub contractors.

06.03.02 The Contractor shall ensure that all the workmen and supervisors, are using the safety appliances regularly during work at site.

© 2022 MECON Limited All rights reserved

06.03.03. Any form of compensation in lieu of safety appliances shall not be permitted. Any violation in safety provisions or failure to maintain safe working conditions will lead to serious penalty on the Contractor and finally may lead to termination of the Contract.

06.03.04 The workmen of the Contractor deployed for construction and erection in hazardous areas shall be provided with personnel protective safety appliances of special nature suitable for hazardous working conditions.

06.04 Safety during construction/execution

06.04.01 The Contractor shall be responsible for the safety of his workmen and employees. The Contractor shall ensure that safety practices are followed so as to prevent personal injury to his workmen and also to other persons working/passing by in that area.

06.04.02 The Contractor shall ensure that in case of any accidents, the same are reported without delay to the Purchaser/Statutory Authorities as per Rules. In case of any injury/accident the Contractor shall bear all the expenditure for medical treatment and shall pay the compensation in case of permanent disability or death.

06.04.03 The Contractor shall ensure that all personnel employed do not stray into other areas. Any injury caused due to this shall be the sole responsibility of the Contractor.

06.04.04 The Contractor shall ensure that skilled labours required for specific works have necessary trade certificates and adequate experience of the job. This is likely to be checked by the Purchaser. The concerned operator, mechanics, electricians, fitters, riggers, etc. must be fully conversant with the hazards associated in operation/maintenance of their relevant equipment.

06.04.05 Safer working platforms

- Contractor shall use strong and secured planks and boards of the right sizes.
- These planks shall be painted at the edges brightly to warn the workers for any misuse (usually zebra paint)
- Barricades should be put-up to prevent them from falling.
- Contractors shall make sure that scaffolds are erected by trained scaffolders.
- Supervisors must inspect scaffolds once every week.

06.04.06 Falling objects and debris

- No loose materials which can fall down should be kept on the working platforms.
- Overhead shelters should be provided to minimize damage from falling objects.
- Strong nets to be provided to catch these objects or debris.
- Nets must envelop all sides of the building.

© 2022 MECON Limited All rights reserved

06.04.07 Personal safety equipment

- Workers must wear approved safety helmets and shoes.
- For those working in high places safety belts shall be provided.
- The safety belts must be attached to strong anchorage points.

06.04.08 Operating construction machine

- Contractors shall make sure that those operating the construction machinery are well trained for their jobs.
- The keys of such machinery shall be kept with the authorized persons.
- The keys shall be removed after use of the machine.

06.04.09 Safer electrical installations

- Contractor shall use approved types of electrical sockets and plugs.
- Proper insulators for all electrical wirings shall be provided.
- Wiring should not be allowed to lie on the floor or on the ground.

06.05 Safety in designing of equipment

06.05.01 All machinery and equipment must be equipped with safety devices. The safety provisions shall conform to the recognized standards, safety codes and statutes.

06.05.02 All safety measures as required to be adopted as per the statutory regulations and the safety rules of the plant shall be strictly followed by the Contractor during the execution of the Contract.

07. Drawings and documents

07.01 Drawings

07.01.01 The drafting standards adopted in preparation of drawings shall be such that good clean and legible print of the drawings can be obtained.

07.01.02 For preparation of original drawings guidelines contained in Indian Standard specification IS:10164-1985 (preparation of engineering drawings and diagrams) shall be followed.

07.02 The Contractor shall submit the drawings in any of the following standard sizes.

Size code	Working space (mm)	Cut size (mm)	Uncut size (mm)
A0	811 x 1144	841 x 1189	880 x 1230
A1	564 x 796	594 x 841	625 x 880
A2	390 x 549	420 x 594	450 x 625
A3	267 x 375	297 x 420	330 x 450

© 2022 MECON Limited All rights reserved

A4	180 x 252	210 x 297	240 x 330

However, Contractor's standard drawings are exempted from the above size limitations. It is desirable to keep the same size for all drawings for ease of filing, reference and record keeping.

07.02.01 All drawings shall be oriented to match the plant layout drawings and shall have a key plan identifying the plant area to which they apply.

07.02.02 All drawings shall be made with the north arrow pointing to the top of the sheet.

07.02.03 There shall be sufficient reference notes and cross references on the drawings to permit identification of all related drawings and documents which are required for proper understanding.

07.02.04 When a drawing is revised by the Contractor, every change made shall be identified on the drawing by placing the revision number in a small triangle so as to be easily recognisable. In addition, a record of revisions along with the co-ordinates showing the location of revisions shall be indicated at the left hand bottom corner of the drawings as per standard practice. In case of revision of drawing, for which different number is allotted, the new drawing shall clearly indicate the number of the drawing which it supersedes.

07.02.05 Approval of drawings from the statutory authorities such as the Indian Boiler Inspectorate, Inspectorate of Explosive, Electrical Inspector, etc. is the responsibility of the Contractor.

07.02.06 Any additional drawings not specifically mentioned by the Purchaser/Consultant but is required for the approval of drawings, shall be submitted by the Contractor.

07.02.07 The title block of the drawing shall be as per the title block enclosed as Annexure 01.

07.03 Approval of drawings.

07.03.01 Approval of Contractor's drawings will generally be accorded within four (4) weeks of receipt.

07.03.02 Approval of Contractor's drawings means that these will be checked for conformity with applicable specifications and general conformity with the engineering requirement for the areas covered in the scope of work. It is understood that approval by the Purchaser's Consultant does not include checking for drafting and other errors but only reviews of basic concepts and general principles involved.

07.03.03 The Contractor shall be responsible for any discrepancy, errors and omissions in the drawings and other information furnished by them, irrespective of whether these drawings have been approved by the Purchaser/Consultants or not. The

© 2022 MECON Limited All rights reserved

Contractor shall bear all extra cost due to alterations necessitated by reasons of any discrepancies, errors or omissions in the drawings and particulars supplied by the Contractor.

07.03.04 Drawings furnished by the Contractor shall be certified as correct for use and shall bear the signatures of responsible persons of the Contractor.

07.03.05 Approval of Contractor's drawings shall not relieve the Contractor of his responsibility to comply with the intent of the contract, manufacture/fabrication or procurement prior to approval of drawings shall be at the Contractor's risk.

07.03.06 The Contractor shall submit 8 sets of drawings to the Purchaser for approval by the Purchaser/Consultant.

07.03.07 If the drawing is "Approved" then one print shall be returned back to the Contractor duly stamped "Approved" by the Consultant.

07.03.08 If the drawing is "Not approved" or "Approved as Noted", then one stamped print with appropriate comments shall be returned back to the Contractor for incorporation of comments and re-submission of revised drawings for approval in 8 sets within 7 days.

07.03.09 After approval of drawings the Contractor shall submit 10 sets of approved drawings to the Purchaser. The Contractor shall incorporate the following note on the drawing before taking additional prints for submission to Purchaser.

"Approved by MECON vide letter no. ……dtd……..."

07.03.10 The drawing shall become a contract drawing after approval and there after the Contractor shall not deviate from them in any way whatsoever except with the written permission of the Purchaser/Consultant.

07.03.11 All reference and information category drawings shall be submitted in 10 sets to Purchaser These drawings shall be submitted to Purchaser before forwarding the same to the erection Contractor at site for construction/erection activities.

07.03.12 The information category drawings shall not be approved by the Consultant. However, information category drawings shall be stamped "For Information Only" and one set shall be returned back to the Contractor.

07.03.13 In case any discrepancy is observed on these drawings, same shall be informed to the Contractor by marking the comments on the drawings. The Contractor shall resubmit these drawings after incorporating the comments in 10 sets to the Purchaser.

07.03.14 After receipt of stamped "For Information Only" drawings, the Contractor shall submit 10 sets of drawings to the Purchaser. The Contractor shall incorporate the following note on the tracing before taking additional prints for submission to the Purchaser.

© 2022 MECON Limited All rights reserved

Stamped "For Information Only" by MECON vide their letter no. ……. dated. …….

07.04 Submission of drawings, CD, reproducible and documents

The Contractor shall submit the following drawings/documents to the Purchaser.

07.04.01 Drawings

		MECON	PURCHASER
1	Approval category drawings for approval of consultants	6 Sets	2 Sets
2	Fabrication drawings for approval of consultants	6 Sets	-
3	Drawings after approval along with list of drawings (for distribution)	8 Sets	2 Sets
4	Information category drawings	8 Sets	2 Sets
5	Information category drawings after stamping "For Information Only" by consultants.	8 Sets	2 Sets
6	Erection drawings	8 Sets	2 Sets
7	As built drawings	-	2 Sets
8	Spare parts drawings	-	2 Sets
9	Wearing parts drawings	-	2 Sets

07.04.02 Compact disc and reproducible

		MECON	PURCHASER
1	As built drawing of approval category	-	1 Set
2	As built drawing of information category	-	1 Set
3	Spare parts drawings	-	1 Set
4	Wearing parts drawings	-	1 Set
5	All Manuals	-	1 Set

07.04.03 Documents

		MECON	PURCHASER
1	Erection manual	1 Set	6 Sets
2	Operating and maintenance manuals	1 Set	6 Sets

© 2022 MECON Limited All rights reserved

3	Storage and reconservation manuals	1 Set	6 Sets
4	Safety manuals	1 Set	6 Sets
5	List of consumables	1 Set	6 Sets
6	List of lubricants and hydraulic oil	1 Set	6 Sets
7	List of special tools and tackles	1 Set	6 Sets
8	Test certificates and inspection certificates in bound volume	1 Set	6 Sets

08. Progress Report

08.01 The contractor shall submit a detailed project network (level – II network) schedule both in hard and editable soft copy (in MS Project / Primavera) which would indicate starting and completion date of all activities of engineering, procurement of material, manufacturing, inspection, dispatch, erection, testing and commissioning etc. under his scope of work, within 2 months from effective date of contract for approval and finalization by the purchaser / consultant.

08.02 The contractor shall submit the progress report in such details as may be required by the purchaser so as to enable them to monitor the progress of work.

08.03 The contractor shall submit information on site activities, viz: daily, weekly and monthly progress in the format mutually discussed and agreed upon with purchaser/contractor.

08.04 The contractor shall submit 11 sets of progress report every month as on 25th of the month so as to reach the purchaser (8 sets) and consultant (3 sets) by 30th of month.

08.05 The contractor shall submit updated detailed project network (level – II network) schedule every month.

08.06 The contractor shall submit off-site / on-site organization chart along with the offer.

08.07 The contractor shall submit deployment of construction man power before finalization of contract.

08.08 The contractor shall submit deployment of equipment and machinery, tools and tackles before finalization of contract.

09 Coding Scheme

All drawings/ documents/ equipment/ spare parts/ shipments shall have a coded number which shall be finalized with the successful tenderer.

© 2022 MECON Limited All rights reserved

Title Block of Drawing **ANNEXURE - I**

	UTKARSHA ALUMINIUM DHATU NIGAM LIMITED				
PROJ. DRG. NO.					
	CONSULTANT **MECON LIMITED**				
SUPPLIER'S FORMAT					
SUBMITTED FOR	**APPROVAL**	**INFORMATION**	**REFERENCE**	**RECORD**	**CONSTRUCTION**

© 2022 MECON Limited All rights reserved

UTKARSHA ALUMINIUM DHATU NIGAM LIMITED

ESTABLISHING FACILITY FOR ALUMINIUM ALLOY MELTING, SLAB CASTING AND FLAT ROLLED PRODUCTS PRODUCTION FACILITY

GENERAL TECHNICAL SPECIFICATION
FOR
FLUID SYSTEM
(GS - 02)

MECON LIMITED
RANCHI – 834002

No. MEC/S/11/35/Q7R6/GTS/01/R0 **JUNE' 2022**

GS - 02	**PART - I**	**WATER SYSTEM**
GS - 02	**PART - II**	**GASES & LIQUID FUELS**

© 2022 MECON Limited All rights reserved

UTKARSHA ALUMINIUM DHATU NIGAM LIMITED

GENERAL TECHNICAL SPECIFICATION
FOR
WATER SYSTEM
(GS 02 PART-I)

MECON LIMITED
RANCHI – 834 002

No. MEC/S/11/35/Q7R6/GTS/01/R0 **JUNE' 2022**

LIST OF CONTENTS
PART- I (WATER SYSTEM) OF GS-02

SL. NO.	DESCRIPTION	PAGE NO.
01.	GENERAL	3-4
02.	DESIGN CRITERIA FOR WATER SYSTEM	4-10
03.	DESIGN CRITERIA FOR PIPE WORKS	10-21
04.	DESIGN CRITERIA FOR PUMPS	21-37
05.	DESIGN CRITERIA FOR COOLING TOWERS	37-41
06.	DESIGN CRITERIA FOR PLATE HEAT EXCHANGER	41-45
07.	DESIGN CRITERIA FOR SOFT WATER PLANT	45-50
08.	DESIGN CRITERIA FOR DM WATER PLANT	50-65
09.	DESIGN CRITERIA FOR WATER BASED FIRE FIGHTING SYSTEM	65-68
10.	DESIGN CRITERIA FOR VALVES	68-74
11.	DESIGN CRITERIA FOR FILTER	74-78
12.	DESIGN CRITERIA FOR STAINLESS STEEL FLEXIBLE HOSES	78-79
13.	DESIGN CRITERIA FOR RUBBER EXPANSION JOINTS	79-80
14.	DESIGN CRITERIA FOR SLUICE GATES	80-83
15.	DESIGN CRITERIA FOR RAW WATER AND DRINKING WATER TREATMENT PLANT	83-95
16.	DESIGN CRITERIA FOR FFLUENT TREATMENT PLANT	95-98
17.	DESIGN CRITERIA FOR OIL SKIMMER	98-98
18.	DESIGN CRITERIA FOR SAND FILTER	98-99
19.	DESIGN CRITERIA FOR SLUDGE SCRAPPER ASSEMBLY	99-99
20.	DESIGN CRITERIA FOR CHEMICAL DOSING SYSTEM FOR RECIRCULATION SYSTEM	99-119
21.	DESIGN CRITERIA FOR SURGE TANK	120-125
22.	REUSE / RECYCLE OF CTBD & WASTE WATER	126-132
23.	SPARES AND CONSUMABLES	132-133
24.	DATA SHEETS	134-205

© 2022 MECON Limited All rights reserved

1.0 GENERAL

Utkarsha Aluminium Dhatu Nigam Limited (UADNL), is a Joint Venture company of M/s National Aluminium Company Limited (NALCO), a Navratna CPSE under Ministry of Mines and M/s Mishra Dhatu Nigam Limited (MIDHANI), a Miniratna CPSE under the Ministry of Defence. This JV Company is incorporated for Setting up green field project of High-End Aluminium Alloy Flat Rolled Products Production Plant at SPSR Nellore district of Andhra Pradesh.

Rated capacity of Aluminium Alloy Plant is 60,000 TPY and it produces Plates, Sheets and Coils at Bodduvaripalem Village, Kodavalur Mandal, SPSR Nellore Distt. in Andhra Pradesh, the overall layout has been planned keeping into consideration an adequate space provision for expanding its future capacity upto 120,000 TPA.

The facility shall be capable to produce 7,000 TPY of aluminium alloy plates, 4800 TPY aluminium alloy sheets, 48000 TPY of aluminium alloy coils and 200 TPY of special grade Al-Li alloy.

The main technological facilities of the proposed project i.e., the Melting, Holding and Casting Furnaces and the Hot and Cold Rolling Mills shall be installed. Hence, new shop building is required for that. However, few auxiliary buildings may have to be considered for electrical control room and water facilities. In addition, Metal handling cranes, ladle, EOT cranes, fork lift trucks, laboratory facilities will also be required as per requirement for the plant.

M/s MECON LIMITED has been appointed as consultant by M/s UADNL for the installation of High-end Aluminium Alloy Melting, Slab Casting, Flat Rolled Products Manufacturing facilities.

1.2 ANALYSIS OF RAW WATER

1.2.1 The analysis of raw water sourced from Kangiri reservoir is given in **Table 1.0** below:

Table - 1.0

Sl. No.	Parameter	Unit	Value
1.	Colour	Hazen units	2
2.	Odour	-	Unobjectionable
3.	LSI	-	0.95 (Scale forming tendency)
4.	Turbidity	NTU	6
5.	pH at 25^0C	-	7.75
6.	Electrical Conductivity	µS/cm	834
7.	Total hardness as $CaCO_3$	mg/l	160
8.	Total dissolved solids @ 180^0C	mg/l	466

© 2022 MECON Limited All rights reserved

Sl. No.	Parameter	Unit	Value
9.	Total Alkalinity / Methyl Orange Alkalinity as $CaCO_3$	mg/l	174
10.	Calcium as Ca	mg/l	35
11.	Magnesium as Mg	mg/l	17
12.	Sodium as Na	mg/l	113
13.	Potassium as K	mg/l	7
14.	Nitrate as NO_2	mg/l	0.02
15.	Chloride as Cl^-	mg/l	131
16.	Phosphorus as PO_4^{3-}	mg/l	0.95
17.	Sulphate as SO_4^{2-}	mg/l	49
18.	Arsenic as As	mg/l	BDL
19.	Boron as B	mg/l	BDL(DL:0.2)
20.	Iron as Fe	mg/l	1.24
21.	Lead as Pb	mg/l	BDL(DL:1)
22.	Copper as Cu	mg/l	BDL(DL:0.02)
23.	Manganese as Mn	mg/l	BDL(DL:0.1)
24.	Pesticide	mg/l	BDL(DL:0.05)
25.	E.Coli	MPN/100 mL	14
26.	Coliform	MPN/100 mL	25
27.	Faecal Coliform	MPN/100 mL	21
28.	Total Plate Count	CFU/mL	47
29.	Enterococcci	MPN/100 mL	22
30.	Sulphate reducing Anaerobes	MPN/100 mL	Absent
31.	Pseudomonas Aeruginosa	CFU/mL	Absent
32.	Staphylococcus aureus	CFU/mL	Absent
33.	Salmonella	CFU/mL	Absent
34.	Legionella	CFU/mL	Absent
35.	Campylobacter	CFU/100mL	Absent

2.0 Design Criteria for Water System

2.1 Pump House

The layout of the various equipment inside the pump house shall be designed keeping in view the safety of the personnel, accessibility of equipment and space for maintenance.

The Pump house shall be of civil construction with RCC roof, closed on all sides and shall be provided with minimum two entries. One of the entries shall be provided with rolling shutters having space provision for maintenance of equipments and loading/unloading into truck parked outside the rolling shutter of Pump house. Each pump

© 2022 MECON Limited All rights reserved

house shall be provided with modern office room with standard furniture of preferred make, and toilet facilities, water purification, water cooler with drinking water points. Office room shall comprises of at least two tables, two reclining chairs, four meeting chairs, two file cabinets, one set of computer with printer facility, necessary illumination and air conditioner. Each technological shops, offices, ECR, and other manned / unmanned buildings shall be provided with drinking water platform with water purification and water coolers. One HDPE OHT of capacity minimum 1500 litre & one water cooler with water purifier 40ltr capacity shall be provided. OHT (PVC/HDPE) shall be provided with drinking water connection, drain pipe and overflow pipe along with suitable valves. Overflow and drain shall be connected to nearest storm water drain. The pump houses, shops, offices etc shall be provided with fire fighting system as per TAC norms. Equipment layout including design load data, equipment foundation size, layout of pump house, details of electrics, cable layout etc shall be furnished. The pump houses shall in general be above ground unless specified otherwise.

Each pump shall have independent suction. The delivery line of each pump shall be connected to the main header.

Minimum clear gap between equipment to equipment, pipe to wall equipment to wall and valves to wall should be kept as per ease of maintenance and operation and shall be decided during detailed engineering but shall not be less than 500mm.

In each pump houses maintenance space of agreed length and width shall be provided.

Clear walkway of width 2.0 m shall be provided on one side of the pump house with clear marked approach to all the pump set, motors, valves, filters etc. All operating platforms/ maintenance platforms shall be of minimum width 1.0 m.

Structural platform with ladder shall be provided so that the valves can be easily accessible for operation and maintenance.

The electrics of the pump house shall be designed as per the specification given in the relevant chapter.

The pump house shall be provided with necessary illumination facilities along with portable lamps. The details of illuminations have been given in the relevant chapter.

The capacity of the hoisting and handling equipment shall be selected in such a manner that it is able to handle the single heaviest load. Cranes/monorails with electric hoist shall be provided as indicated in the relevant chapter.

The pump house shall be provided with suitable ventilation, electrics, illumination, instrumentation, telecommunication, office room, control room (if required), with furniture wall clock and hoisting and handling equipment. The control room and office room shall be air-conditioned.

The pump house shall be provided with adequate drainage facilities with necessary side slope, channels, etc. leading to drainage sump of suitable capacity.

© 2022 MECON Limited All rights reserved

Minimum two drainage pumps (one working and one standby) type - submersible / vertical non-clog type centrifugal pumps, of suitable capacity shall be provided to drain out the leakage/seepage water in pump houses, technological shops and electrical buildings. However, in substation / cable tunnels only submersible pump shall be provided. The drainage pumps shall operate automatically based on water levels in the sump. In case of drainage pumps and other special type of vertical pumps, the pumps shall include the electric motor suitable or vertical mounting, motor stool, base plate with accessories and fixing bolts, flexible coupling, shaft enclosing pipe column assembly, bearings, lubrication gaskets and washers pressure gauges, strainer at suction side etc. The characteristics of the prime mover shall be same as described under the main pumps. If the length of the pump house is more, then drainage pumps shall be installed at an interval of approx. 50m

The pump house apart from pump set shall also comprise plate heat exchangers (PHE), Auto backwash filters and simplex / duplex filters. Alternatively, PHE, Auto backwash filters, simplex / duplex filters may be provided on first floor of the pump house with design criteria same as of the pump house.

All RCC pump houses and sump shall be provided with RCC staircase from both sides upto terrace/roof. All sumps shall be provided with hand railings and pump houses with parapet of 1.2 m height.

2.2 Sump

The sump/suction chamber shall be designed as per the standard of Hydraulic Institute. Sump model tests shall be conducted, if necessary. Sump model test shall be carried out by the contractor through government-approved institutions like CWPRS Pune, / IISc Bangalore/ IIT Roorkee/ IIT Bombay. The sump shall be epoxy painted from inside. The sump/suction chamber shall have two compartments for each group of pump with provisions to divert the entire flow from the cooling tower/ settling tank to either of the compartments when one of the compartments is under repair/maintenance. Sluice gates shall be provided for isolation of the compartments. The sluice gates shall be selected for velocity less than 0.5 m/s. The suction chambers / sump shall be provided with drain and overflow connections leading to the nearest storm water drain. The minimum capacity of the sump shall be of 10 minutes of the working pumping capacity. However, single compartment may be accepted in case of single group of pump (single water circuit) is envisaged.

The makeup water shall be drawn into the sump through motorized valve, which shall open/close depending upon the level in the sump. The scheme of make-up water supply shall ensure maintenance of normal water level in the sump and prevent wastage through overflow. Level switch shall be provided in the sump, which will actuate motor/solenoid operated Gate valve on make-up water line to the sump in order to maintain water level within a desired range. A bypass make-up water line with float valve shall also be provided into the sump. The motorised isolation valve on the make-up water line shall be provided with 2 Nos. of manual isolation valves on upstream side. The bypass line shall be provided from centre of manual isolation valves.

The pump house sump shall be provided with low level / very low level / high level / very

© 2022 MECON Limited All rights reserved

high alarm and the pumps shall be provided with dry running protection.

2.3 Pump & Piping inside Pump house

Total no. of pumps for a particular group shall be selected in the following manners.

Total no. of working pumps for a particular group	Minimum no. of reserve pumps for each group
1 pump	1*
2 to 3	2
More than 3 but less than 6	3

* In case of slurry pump minimum 2 nos. of standby pump sets will be provided.

Final arrangement shall be decided by the Purchaser / Consultant during detailed engineering stage on case-to-case basis. In case of drainage pumps, there will be one reserve pump for one working pump.

All the cold water and hot water pumps shall be of horizontal, centrifugal type side suction & side delivery type (HSC) and shall have flooded suction. If HSC/ SSSD pump model is not available with preferred vendors, ESTD pumps/vertical centrifugal pumps may be accepted (case to case). The design criteria of pump house and sump mentioned in this specifications are also applicable for vertical centrifugal pumps.

For VT pump application stipulation of hydraulic institute shall be followed.

Open circuit
In pump suction: Butterfly valve followed by rubber expansion joint (REJ) shall be provided.
In Pump delivery line: REJ followed by Dual Plate check valve (DPCV) followed by motorised butterfly valve followed by manual butterfly valve.

Closed circuit
In pump suction: Butterfly valve followed by rubber expansion joint (REJ) shall be provided.
In Pump delivery line: REJ followed by Dual Plate check valve (DPCV) followed by butterfly valve.
For closed circuit, motorised valves are not allowed. All valves DN 300 and above shall be gear operated. In addition, suction and delivery pipe lines shall be provided with spectacle blind for complete isolation purpose.

In case of double header system with ring main concept each header shall be designed for 70% of total flow. Suitable Segmentation valves shall be provided on the ring main.

Each pump shall be provided with local indication of pressure on suction side and local indication and signalling of pressure on delivery side.

Each header shall be provided with local indication, recording and signalling of flow, pressure and temperature, which shall be depicted on the panel of the control room.

© 2022 MECON Limited All rights reserved

All the valves of diameter 600 mm (except for fire fighting application which will be manual/ gear operated) and above and the valves requiring remote control operation shall be electrically / pneumatically operated. Electrically operated valves shall be provided with limit switches as a safety measure. Electrically operated valves shall have provision for manual operation also. All Manual valves of sizes DN300 to DN 500 shall be gear operated. All valves of sizes up to DN 250 shall be manual operated.

Rubber Expansion joints near the pumps on both suction and delivery lines before reducers (i.e. size same as suction/delivery valve size).

The pipe network and valves within the pump house shall be adequately supported so as to avoid undue stress on the pumps.

2.4 Pump House Operation Philosophy

All the controls for the recirculation system and cooling tower shall be provided and the control panel shall depict the working condition of various units.

The following interlocks shall be provided, as applicable, in the operation of all the pumps, such that for the starting of any of the pumps:

- The level of the liquid in the pump house basin is higher than the low level,
- All the pumps shall be tripped when the low-low level is reached.

Wherever gravity drainage of premises is not feasible, suitable drainage pit shall be provided for collection of drain and stray effluents. Minimum two Vertical / submersible non clog type drainage pumps of adequate capacity shall be provided in the drainage pit for automatic operation based on the drainage pit water level. The level control equipment for automatic operation shall consist of the following:

a) level indication,
b) low level to stop the pump(s),
c) high level to start the first pump,
d) high-high level to start the second pump,
e) high-high-high level for alarm annunciation.

2.5 Velocity in Pipes

The following flow velocities shall be maintained for the pump suction and delivery branches and water pipeline headers / branch headers and distribution network.

The following velocity criteria is not applicable for fire fighting system. The same shall be guided by TAC norms.

Open circuit

Pipe Diameter	Suction side (m/s)	Delivery side (m/s)
Upto DN 150 mm	Upto 1.0	Upto 1.5
DN 200 mm to 1000 mm	Upto 1.2	Upto 2.2
Above DN 1000 mm	Upto 1.5	Upto 2.5

© 2022 MECON Limited All rights reserved

Closed circuit
Velocity at Suction and delivery shall be same & limited to 2.5 m/s

2.6 Suitable chemical and chloride / biocide dosing facilities shall be provided in the suction chambers of the pump houses so as to prevent biological growth, scale/ corrosion in any of the circulating water system. The facilities shall consist of chemical storage tanks of suitable storage time, dosing pumps (metering type) one working and one reserve. The dosing system shall be complete in all respects with tanks, pumps, valves, supports, agitators and necessary pipe-work. 90 days chemical storage space shall be provided near the pump house in separate building.

2.7 **HOISTING & HANDLING EQUIPMENT:**

The hoists shall be designed in accordance with the latest edition of IS-3938-1983 standard subject to any modifications and requirements specified hereinafter. Hoist will be operated by pendant push button station.

The type of lifting device shall be selected based on amount of load to be lifted, height of lift and frequency of operation and the layout of the equipment to be lifted. In general, if the load to be lifted is 500kg or more and /or height of lift is 6 m and more, electrically operated handling equipment shall be provided.

1	Manual hoist with chain pulley block of capacity 1 t	for load from 15 kgs upto 200 kg
2	Electric hoist of capacity 2 t	for load more than 200 kg & upto 1.5 t
3	U/S Crane/ Single Girder EOT Crane above of capacity 3t to 5t	for load more than 1.5 t up to 3.5t
4	U/S crane or DG EOT Crane above 5t	for load more than 3.5 t

All the Underslung cranes shall be provided with C type maintenance platform at one end of pump house. Regular RCC/ Structural Staircase shall be provided to reach the C type platform.

For detail specification of hoisting facilities, please refer the relevant clauses of GS-06 (Material Handling & hoisting).

2.8 **OVERHEAD TANK / EMERGENCY OVERHEAD TANKS**

Make-up water and drinking water overhead tank will be provided at a suitable height for supply of make-up water and drinking water to different consumers.

Emergency overhead tanks will be provided each at a suitable staging height for supply of emergency water to critical consumers for a short duration (min. 30 minutes) in the event of interruption in normal cooling water supply. The overhead tanks will be multi-compartment type, each compartment serving emergency water requirements of individual consumer. Emergency water requirement of Tunnel Furnace and blast furnace is substantially high and over a longer duration, one separate tank will be provided and to be used exclusively for the tunnel furnace and blast furnace. The filling of emergency

© 2022 MECON Limited All rights reserved

water tanks for loss of water under normal operation and supply of cooling water from the tanks under emergency conditions will be under automatic control. Overhead tanks will be provided with overflow, drain, level transmitters, PRVs and air vent connections.

Overhead tank shall be of RCC construction, epoxy painted from inside (food grade in case of drinking water compartment) and shall be provided with overflow, drain and air vent connections. The OH Tanks shall be partitioned to facilitate maintenance. The inside surface of the tanks- both emergency overhead tank and on- ground/underground tanks storing soft water shall be epoxy painted. OH Tanks / EOHT will be provided with stair case (width 1.0 m) upto the top of the tank. There will be a walkable platform all around tanks with hand railings. Level of water in overhead tank will be transmitted to PLC system of respective cooling water system / pump house.

One ground tank of effective capacity 1.2 times the EOHT shall be provided below the emergency overhead tank for collection of return emergency water. A separate group of pumps of adequate capacity (1W motor driven + 1S diesel driven) shall be provided for pumping back the emergency water collected in the ground tank to the overhead tank in 30 minutes. These pumps shall also be used for re-circulating the EOHT water through ground storage sump. Diesel engine operated emergency pumps will operate in conjunction with emergency overhead tanks for supplying emergency cooling water. Capacity of the diesel pumps will match the emergency water flow from the EOHT and shall not be less than normal cooling water flow.

3.0 DESIGN CRITERIA FOR PIPE WORK

The term pipe work referred herein generally cover pipes, fittings (such as bends, tees, reducers, plugs, nipples, sockets, unions, flanges, crosses etc.), valves of various types and functions (such as gate, globe butterfly, plug, ball check, diaphragm, electrically operated, pressure reducing valves, etc.) strainers, filters, hoses, hose couplings hose clamps, hose nozzles, fire hydrant assemblies, pipe supports, corrosion protection etc.

Pipe work is intended to convey fluids such as different qualities of water and industrial effluents.

The pipe work shall be designed, manufactured, assembled and tested as per the latest standards, codes and recommendations of the Bureau of Indian Standards, ANSI, ASTM, AWWA, or other equivalent international standards. Pipe work shall be complete in all respects including all accessories essential for proper installation, operation and maintenance, even though such items are not specifically mentioned in the specification.

Piping system shall be designed with high degree of reliability so that the systems perform the duty of fluid handling without any failure under all conditions of plant operation.

Piping layout must follow good engineering practice. Proper attention shall be given to obtain full functional requirement of the piping system with a layout, which provides sufficient clearance for other equipment and operating personnel, easy access for operation and maintenance, convenient supporting points and neat appearance.

© 2022 MECON Limited All rights reserved

Complete design of piping system shall be subject to approval by the Owner/ Consultant. The design shall take into account the effect of internal/external pressure, thermal expansion, self-weight of piping, support reactions, surge and water hammer, earthquake and wind effects at site, corrosion and erosion etc. and any other effects dictated by good engineering practices.

Water Hammer study Surge for cross-country pipeline and calculation of surge protection measures shall be arranged to be carried out by CWPRS Pune,/ IISc Bangalore/ IIT Roorkee/ IIT Bombay. Surge Analysis of the Overhead pipeline shall be carried out for interplant pipe network.

MOC of pipe lines to be used for various services shall be as listed below:

1. Cooling / Circulation water (Industrial Quality) –Carbon steel (CS)
2. Waste water / Industrial effluent (with Chloride & hardness levels less than 100 ppm) – CS
3. Waste water / Industrial effluent (with Chloride & hardness levels more than 100 ppm and TDS level more than 1000 ppm) – CPVC/HDPE
4. Chemical pipe lines – CPVC
5. Soft water pipe lines – Inside soft water plant – MSRL & In other area – CS pipes
6. DM water pipe lines – SS pipes
7. Cross country piping – CMDI pipes/CS/GRP (based on application and pressure rating)
8. Make-up water distribution piping – CS pipes
9. Drinking water piping (interplant) – GI pipes upto DN 65 & CS above DN 65.
10. Slurry piping (abrasive) – CS pipes inner lined with abrasive resistant material.
11. Slurry piping (non-abrasive) – CS pipes with higher thickness.
12. Slurry launder – MS launder lined with 30 mm thick basalt tiles
13. Scale flume – RCC flume lined with 30 mm thick Basalt tiles.
14. Fire water (hydrant system) – CS pipes

Pipelines shall be laid over ground on the structural trestle. Maintenance/working platform in trestles shall be provided for maintenance of valves or any other equipment other than pipe is provided in the piping over trestles. Wherever it is not possible, it will be laid in RCC tunnels or RCC covered trenches as far as possible. Pipelines for Firewater, Industrial Makeup water & Drinking water may be laid underground.

As far as possible all the pipelines shall be laid together along the piping corridor. The piping corridor shall be parallel to and by the side of roads.

The pipe network shall be provided with air release valves at high points and drain valves at the lower points.

Pipeline passing under or through equipment foundations or walls of buildings or any other inaccessible structure shall be provided with steel encasing pipes for easy insertion and removal.

All the pressure pipes shall be laid with a nominal slope and the gravity network with slope of self-cleaning velocities.

© 2022 MECON Limited All rights reserved

Continuous welding MS pipes shall be used and pipe flanged at regular intervals & at bends shall be used for slurry (cast basalt pipe) and other corrosive fluid services.

Except where otherwise specified, all piping shall have butt-welded connections with a minimum of flanged joints for connections to equipment. Branches shall in general, be formed by welding.

Provision shall be made for branches for cleaning and flushing of pipelines wherever necessary.

Manholes shall be provided in the gravity pipe networks and the distance between two manholes shall be 30-50 m depending upon the pipe size.

Wherever over-ground pipelines are crossing roads and railway tracks, they shall be laid on pipe bridges (clear gap of 8.0 m from rail / road top) to provide the necessary clearance for the traffic movement. This should take into account the various types of vehicles likely to move in the plant.

Valves provided on the over-ground pipe network shall be provided with steel structural platforms and access ladders.

Walkable platforms of min. width 1.0 m with necessary handrails shall be provided by the side of overhead pipe trestles, overhead slime troughs and open gravity network.

Provision shall be made for support of piping which may be disconnected during maintenance work. All large pipes and all long pipes shall have at least two supports each arranged in such a way that any length of piping or valve may be removed without any additional supports being required.

Pipe supports shall be capable of supporting the pipelines under all conditions of operation.

All the buried pipelines shall be laid with a nominal slope towards the drain point.

All the buried pipelines shall be laid as far as possible at a depth of about 1200 mm, below finished ground level (i.e. the top of the pipelines shall be 1.2 m below the finished ground level).

Isolation /control valves, drain valves, air release valve provided on the buried pipe network shall be housed in suitably sized covered valve pit and the valve pits shall be of self-draining type, means the water accumulation in the valve pit shall not occur. The pit shall be drained either through gravity or by means of pumping.

Wherever the buried pipelines are crossing the roads and tracks, they shall be suitably encased with mild steel pipes or reinforced concrete casing pipes (NP4 grade) and the different sizes of the encasing pipes shall be as appended:

© 2022 MECON Limited All rights reserved

Encased pipe diameter	Encasing pipe (For Flanged pipe) size (mm)	Encasing pipe (for welded pipe) size (mm)
Upto 100	300	250
150	400	300
200	500	400
300	600	400
350	600	500
400	700	600
500	800	700
600	900	800
700	1000	900
800	1100	1000
900	1200	1100
1000	1400	1200

In case a number of pipes are crossing road or track, these pipes shall be laid in a reinforced concrete culvert having easy access.

Coal tar based anticorrosion tape as per IS: 15337 – 2003 shall be provided for protection of underground mild steel pipelines. The thickness of tape shall be 4 mm for all pipes.

3.1 LAYING BURIED PIPELINES

All buried pipelines shall be laid with earth cover sufficient to avoid damage from pressure of vibration caused by the surface traffic. Minimum earth covering over the pipe shall be 1200 mm from the finished ground levels. For laying of buried pipelines earth work in excavation, back filling and acceptance of trenches etc. shall be as per IS: 5822-1994 and IS: 3114-1994 and IS: 12288-1987.

The trench shall be so dug that the pipeline can be laid to the required alignment and at the required depth; proper levelling of the excavated surfaces is an essential requirement.

In case stones, boulders etc. are found at the bottom of the trench which cannot be removed completely, the bottom shall be levelled by sand layer for a minimum thickness of 150 mm.

If the depth of excavation is more, proper protection for sidewalls shall be provided till the pipe levelling is completed.

The entire pipe trenches bottom shall be covered with local sand bed of 50 mm thick layer.
After laying the pipelines, 150 mm thick layer of local sand shall be provided over the sand bed.

Precautions shall be taken at all the times to prevent damage to the coating and wrapping in the pipe lines and appurtenances as applicable by workmen or trespassers during laying or at any other time. Pipe handling slung and any blocking used in handling or storing the pipes must be well padded to avoid damage to pipe and its coating.

© 2022 MECON Limited All rights reserved

After laying a pipeline on skids it shall be thoroughly cleaned, inspected and for any damage to the protective coating, satisfactory repair work shall be performed while the pipe is suspended above the trench.

Before laying the pipelines, the Owner shall examine the trenches and after his approval only the pipes can be laid.

After the pipes are erected and tested, the back filling of the trenches shall be done with loose soil free from stones, bricks and metallic pieces, in layers and shall be well rammed and compacted.

Where the pipelines cannot be laid overhead on stockades and are crossing roads and tracks at too many points in a given area, the pipeline may be laid in walk-able tunnels.

Pipelines in tunnels shall be provided with isolating valves, air release valves and drain valves, which are easily accessible for operation and maintenance. Gland type of Compensators shall be provided on these pipelines wherever necessary.

Pipelines in tunnels shall be suitably ventilated and illuminated. There shall be minimum two entries for the tunnel. Each tunnel shall be provided with at-least two vertical centrifugal, non-clog type drainage pumps (one working and one standby) in a drainage pit and these pumps shall operate automatically based on the liquid levels. Tunnel shall be provided with saucer drain at one side with slope towards the drainage pit. Each tunnel shall be provided with at least a monorail and hoist for erection and maintenance purposes. Minimum height of the tunnel shall be of 3.0 m and suitable walkway of 1.2m minimum width shall be provided for each tunnel.

Spacing of Pipes in U/G Tunnels & Trenches/ OH Structural Trestles

Pipes on O/H structural trestle.

For O/H trestle, 1m clear walkway with hand railings to be provided. If the width of the trestle is more than 6m, 1m walkway to be provided on both sides of the trestle. For pipe DN 350 & above, Saddle support to be provided. Cleat support can be provided inside pump house. For pipe less than DN 350 U-clamp support to be provided.

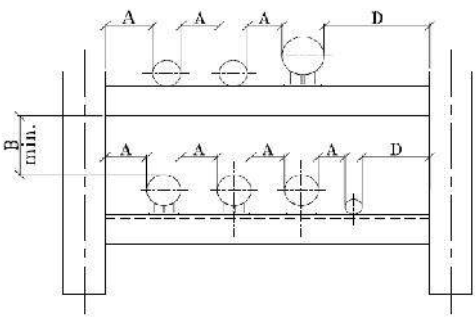

© 2022 MECON Limited All rights reserved

The typical cross-section of tunnel/trench showing pipe arrangement is as indicated below:

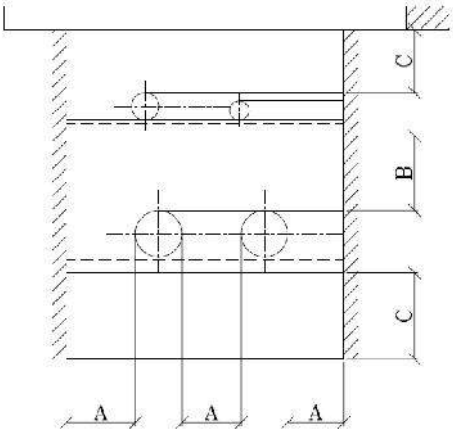

PIPE IN TRENCH

`

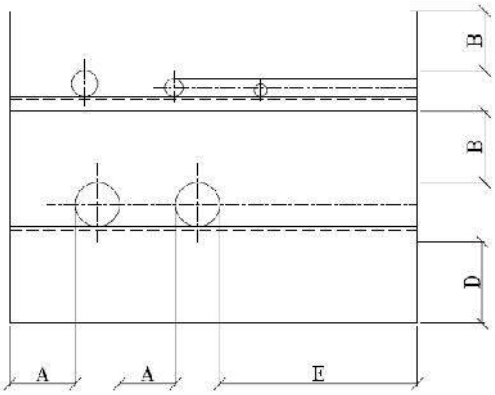

PIPE IN TUNNEL

Sl. No.	Nominal dia (mm)	Spacing (mm)				
		A	B	C	D	E
1.	50	150	300	100	150	800
2.	65	150	300	100	150	800
3.	80	150	300	100	150	800
4.	100	150	300	100	150	800
5.	125	150	300	100	150	800
6.	150	150	300	100	150	800
7.	200	300	300	100	300	800
8.	250	300	350	100	300	800
9.	300	300	400	100	300	800

© 2022 MECON Limited All rights reserved

10.	350	300	450	100	300	900
11.	400	350	500	100	300	900
12.	450	350	550	100	300	1000
13.	500	350	600	100	300	1000
14.	600	350	700	100	300	1200
15.	700	350	800	100	300	1200
16.	800	400	900	100	500	1500
17.	900	400	1000	100	500	1500
18.	1000	400	1100	100	500	1500

Pipelines within the shop buildings shall be laid overhead supported form the building columns/side walls/cranes girder etc. wherever this is not possible, the pipelines shall be laid either in tunnel or in pipe trenches (covered with removable slabs or chequered plates).

Wherever pipelines are crossing form one bay to another parallel bay, they shall be laid in tunnel or supported form the gable end.

3.2 PIPE SPECIFICATION

A) Pipe Specification (Carbon Steel)

Type	Dia. (mm)	Standard	Material	Thickness	Manufacture
Black pipe	15-50	B36.10	A106	Sch 80	Seamless
Black pipe	65-150	IS1239:2004	Fe410	Heavy class	ERW
Black pipe	200-250	IS3589:2001	Fe410	6.35mm	ERW
Black pipe	300-350	IS3589:2001	Fe410	7.14mm	ERW
Black pipe	400-450	IS3589:2001	Fe410	7.14mm	ERW
SW	500-1000	IS3589:2001	Fe410	7.92mm	Spiral Welded.
SW	1000-1200	IS3589:2001	Fe410	8.74mm	Spiral Welded.

CS Fittings (Class 3000)	Applicable standards.
Pipe butt welded fittings	ANS B16.9 ANS B16.28 Material: ASTM A234 WP8
Forged fittings: -	ANSI B16.11, thread to

© 2022 MECON Limited All rights reserved

(Socket / Screwed fittings)	ASA B2.1 Material: ASTM A105
Mitre Bend: -	To be fabricated from parent pipe

B) <u>Pipe Specification (Stainless steel)</u>

Pipe size	**Applicable standards**.
Upto Dia. 50mm.	Dimensions as per ANSI B36.19, Schedule 40, Conforming ASTM A312 TP304
Beyond 65mm and above	Dimensions as per ANSI B36.19, Schedule 20, Conforming ASTM A312 TP304

SS Fittings (Minimum class 3000)	**Applicable standards**.
Butt welding fittings	As per ANSI – 16.9, ASTM A304 WP304
Socket welding fittings	As per ANSI B16.11– A182 F-304
Screwed fittings	As per ANSI B16.11– A182 F-304

C) **HDPE Pipes**

1. From sizes OD 20 to OD 50 – IS 7328- PE100, PN 16, Plain End, Dimensional Standard IS 4984
2. From Sizes OF 63 to OD 630 - IS 7328- PE100, PN 10, Plain End, Dimensional Standard IS 4984
3. HDPE fitting shall generally confirm to IS 7328 PE-100, PN 16/PN 10 based on the pipe rating.

D) **CPVC pipe & fittings**

1. Pipes of size DN 15 to DN 350 – ASTM D1784 – CPVC (23447-B), Sch. 40, Plain end, Dimensional standard – ASTM F441
2. Fittings - ASTM D1784 – CPVC (23447-B), Sch. 80, Socket cemented, Dimensional standard – ASTM F438

3.3 <u>TABLE FOR MAXIMUM SPAN OF SUPPORTS</u>

Sl. No.	**Nominal pipe size (mm)**	**Maximum span for liquid services (m)**
1.	25	2.1

© 2022 MECON Limited All rights reserved

Sl. No.	Nominal pipe size (mm)	Maximum span for liquid services (m)
2.	40	2.7
3.	50	3.0
4.	65	3.4
5.	80	4.0
6.	100	4.3
7.	150	5.2
8.	200	5.8
9.	250	6.7
10.	300	7.0
11.	350	7.6
12.	400	8.2
13.	450	8.5
14.	500	9.2
15.	600	9.8
16.	900	12.0
17.	1000	15.0

Note: Vertical pipe work shall be clamped at intervals of 3.5m (approx.) and at the base of each riser. Maximum span at the place of turning shall be 0.7 times of normal span.

Dimensional Performance and End Finishes

Tolerance on outside diameter of the pipe and specified thickness shall conform to the limits laid down in IS: 3589-2001. Finish pipe shall not deviate from straightness by more than 0.2% of the total length.

Pipes to be butt-welded shall be supplied with ends bevelled to an angle of 30 degrees (+ 5 degree – 0 degree) measured from a line drawn perpendicular to the axis of the pipe. The root face shall be 1.6 ± 0.8 mm.

Method of Quality Control in Welded Joints

Following steps shall be taken by the Contractor, besides controlling quality in general, to make effective control in carrying out welded joints.

a) Welding procedures shall be prepared in line with IS: 7307 (Part – I) – 1974, reaffirmed in 1991 and tests shall be carried out to quality procedures. Number of procedures will depend on variables like positions of welding, thickness range etc. Once a welding procedure is qualified, strict adherence to it shall be made during actual welding.

b) Welders employed shall be qualified as per IS: 7310 (Part – I) – 1974, reaffirmed in 1987 after passing necessary tests.

c) Welding consumables shall be of approved type. Such consumables are, however, subject to qualifying initial check tests as per IS: 814-1991.

© 2022 MECON Limited All rights reserved

d) The Contractor shall strictly follow approved welding procedures during actual welding. Besides, the following stages of inspection shall also be carried out:

i) Weld edge preparation before welding, proper fit up, position of welding, cleaning of slag between the passes, proper weld profile etc., shall be checked visually amongst others.

ii) Non-destructive tests of weld of welded joints shall be carried out as per approved procedures/ drawings.

Preparation of Joints

The Contractor shall prepare the edge correctly to the shape, size and dimensions of the vee-grooves as per ANSI B-16.25 unless otherwise specified in drawings/ documents.

The welding surfaces shall be smooth, uniform and free from fins, tears, notches or any other defect which may adversely affect welding and shall be free from loose scale, slag, rust, grease, paint, moisture or any other foreign material. The clean surface shall extend to about 10 mm beyond the welding faces to avoid contamination of the weld metal with foreign material and to avoid unsound weld deposit.

Assembly, Alignment & Welding

The sequence of welding shall be so planned and followed that there shall be a balance of welding about the neutral axis of the fabrication. The Contractor shall employ sufficient number of welders working at the same time in diagonal quadrants of the shell using back-step method of welding. The rate of progress of each welder shall be more or less equal and quality uniform.

The general direction of welding shall be towards the free end of the joint, but in a long joint as in shell fabrication, back-step technique shall be used to reduce distortion.

To minimize internal locked up stresses due to welding, the vertical joints for the shell shall be welded and completed to a circular course and then the horizontal circumferential seam welded. However, before the welding of horizontal seam started, the complete circular course shall be aligned and adjusted for their correct axes.

Alternatively, the Contractor shall complete each course in all respect on ground and then the pre-assembled course shall be listed and placed in position. In such a sequence and planning, the same principle of balancing of weld about the neutral axis shall be followed and the method of fabrication of each course shall be similar to fabrication of penstock pipes of transmission/ industrial pipelines of bigger diameter.

Pipe and attachment shall be aligned properly by accurate and permanent methods prior to welding. If tack welds are used, the tack shall be either fused into the first layer or weld or else chipped out.

Tests on welded joints

© 2022 MECON Limited All rights reserved

(a) Visual examination

The Contractor shall conduct visual examination and measurement of external dimensions of the weld for all joints. Before examining the welded joints, areas close to it on both sides of the weld for a width not less that of 20 mm shall be cleared of slag and other impurities. Examination shall be done by magnifying glass which has a magnification power of ten (10) and measuring instrument which has an accuracy of ± 0.1 mm of by weld gauges. Welded joints shall be examined from both sides. After leak test of the pipeline the coating of the joints shall be done. The Contractor shall examine the following during the Visual examination: -

i. Check the correctness of shape and size of the welded joints
ii. Incomplete penetration of weld metal
iii. Influx
iv. Burns
v. Under cuts
vi. Un-welded crates
vii. Cracks in welded spots and heat affected zones
viii. Porosity in welds and spot welds
ix. Compression in welded joints as a result of electrode impact while carrying out contact welding
x. Displacement of welded element.

To carry out any or all tests as specified hereinafter to satisfy the Purchaser about the acceptability of the welded joints, as directed by the Purchaser.

(b) Liquid Dye-penetrant Test

Liquid dye-penetrant tests shall be carried out in accordance with IS: 3658-1981, reaffirmed in 1991 for surface/ sub-surface defects.

(c) Test by Blowing

The surface of the weld shall be covered with soap solution consisting of one (1) litre of water and hundred (100) grams of soap. Compressed air shall be blown from the opposite side at pressure of 4 to 5 kg/cm^2. The distance between the tip of base and the weld shall not be more than 50 mm. Any formation of soap bubble will indicate welding defects. Portable compressor shall be arranged by the Contractor, if necessary, for this purpose.

(d) Hydro-testing

The pipes shall be tested with water for correctness of pressure withstanding. The hydro test pressure for all welded/flanged water carrying pipes shall be 1.5 times of working pressure or 10 kg/cm2, whichever is higher.

Tolerance

Deviations for assembly of welded joints may be permitted to the following extent:

© 2022 MECON Limited All rights reserved

Sl. No.		Tolerance	
		Manual arc	**Automatic**
a)	Source butt-Joints		
	i) Gap between the ends of plates	+ 2.00 mm - 1.00 mm	± 1.00 mm
	ii) Stepping of one plate over the other	1.00 mm	2.00 mm
b)	Single Vee-groove Joints		
	i) Bevel angle	± 5 deg.	± 5 deg.
	ii) Gap between two	+ 2.00 mm - 1.00 mm	+ 1.00 mm
		Manual arc	**Automatic**
	iii) Stepping of one plate over other	2.00 mm	2.00 mm
c)	Lap Joint		
	i) Overlap	5.00 mm	5.00 mm
	ii) Gap between the surface	2.00 mm	1.00 mm
d)	Tee-filler Joints		
	i) Gap between the edges of the web and the surface of the flange	2.00 mm	2.00 mm

Note: After hydro testing of the pipeline all the joints shall be coated / painted only after rectification of defects if any.

4.0 DESIGN CRITERIA FOR PUMPS

4.01 HORIZONTAL & VERTICAL CENTRIFUGAL PUMPS

All the pumps provided in the pump house shall be horizontal centrifugal type with flooded suction. Drainage pumps installed in sump pits shall be horizontal, centrifugal type with priming tank arrangement. In the event of space constraints, the use of vertical centrifugal, non-clog submersible pumps may be permitted. As far as practicable, pumps of reputed indigenous makes shall be preferred. Pump type shall be HSC SSSD type only. In case the HSC SSSD pump of required duty parameter are not in the manufacturing range, ESTD pump can be accepted subject to submission of details.

The horizontal pumps shall be mounted on a common base plate with the motor and shall be directly coupled to the motor thorough a flexible coupling without any gear reducer. In case of slurry pumps V-belt driven to be provided. Fluid coupling for slurry pumps to be provided as per system requirement.

The pumps (horizontal as well as vertical centrifugal) will be designed, manufactured and tested as per IS:1520-1980, IS:5120-1977 R.A.1991, IS:9137-1978 R.A.1993 or as per international standards acceptable to the Purchaser and will be suitable for the required duty conditions and capacities.

© 2022 MECON Limited All rights reserved

The pumps and their auxiliary equipment shall be suitable for the required duty conditions and shall be designed and constructed for continuous duty at full load.

The centrifugal pumps shall be suitable for a capacity range of 25% to 125% of duty point capacity. However, Pumps having low flow & high head may be suitably reviewed during detailed engg regarding above.

In case of pumps are to be operated in parallel, the motors are to be suitable for parallel operation depending upon the end of the power curve.

- Based on the full range curve, Motor rating selected should be suitable considering end of the range power.
- Motor rotation should be bidirectional

The motor capacity shall have a margin over its BHP absorbed at the pump shaft at duty point and the margin shall be 25% for motors of rating upto 15kW, 20% for motors of rating 18.5kW to 160kW and 15% for motors of rating 200kW and above. The above margin shall be in addition to temperature derating.

All the pump shall be selected keeping margin of 10% on flow and 5% on calculated head. Pump set with motor of 300 kW and above shall be of nominal 1000 rpm or less.

The equipment and auxiliaries shall be designed for quick and economical maintenance. The equipment shall be easily dismantable without disturbing the suction and delivery pipe connections.

The equipment design shall incorporate provisions for reduction in noise level of Max 85 dB from 1m distance.

The rotating elements of the pumps shall be checked for critical speed in bending as well as in torsion. The critical speeds shall be at least 30% away from the normal speeds for units with flexible shafts and at least 20% away from the maximum operating speed in case of stiff shafts.

All passages inside the pump casing and impellers, which may be inaccessible to machining, shall be ground to a smooth finish as far as practicable.

The direction of rotation shall be clearly marked either by incorporating it on the casing or by separate metal plate arrow securely fitted to the casing.

- The head – Vs – discharge characteristics of the pump shall be continuously rising form the duty point to the shut off point without any zone of instability. The required duty range for a pump shall be on the stable portion of its head capacity curve close to the best efficiency point. The head developed at the best efficiency point shall be close to the required differential pressure so that throttling is not required at pump discharge. The power-Vs- discharge characteristics shall be non-overloading type.

- The pump shall be so selected and installed that the available NPSH is not lower

© 2022 MECON Limited All rights reserved

than the required NPSH even in the most adverse operating conditions. Required NPSH of the selected pump shall be less than 6.5 m (except diesel engine driven wherein the max NPSHR shall be limited to 8. Impeller diameter shall be selected preferably with in 25%-75% range of the respective family curve.

- The pump shall be of proven make and design having material of construction which is the best of its kind for the particular application and shall be manufactured using best engineering practices under strict quality control. Each pump shall be tested as per the standards stipulated elsewhere in this document. The test shall include hydrostatic test, static and dynamic balancing tests, performance tests material tests and motor routine tests.

- The pump shaft and bearing shall be adequately sized to take the unbalanced forced due to mal-operation. The pump gland shall ensure proper sealing without excessive tightening of the packing. Proper cooling and flushing arrangement for the gland shall be provided wherever required.

- All moving parts of the pump shall be adequately guarded to prevent any injury to operating personnel.

- Pumps shall be designed and installed keeping in view the easy accessibility of its parts for maintenance. All end suction pumps shall be of back-pull-out design and shall be provided with spacer coupling of adequate length.

- Mechanical seals shall be provided at all pumps envisaged for closed loop circuit.

- Minimum no. of standby pump shall be provided for each group of clear water pumps and drainage pumps as specified in the design criteria for pump house. The group of Pumps for scale water or other abrasive slurries shall be provided with at least two standby units. Special abrasion resistant material shall be used for these pumps and the design shall allow easy replacement of parts subject to wear and tear.

- The suction pipeline shall be laid at a constant down ward slope from pump centre line to the suction chamber. Reducers used in the line shall be eccentric type to keep the top of the suction line straight.

- Each pump shall be provided with adequate safety interlocks including overload and dry running protection.

- All pumps shall be provided with suitable lifting attachments and each pump installation shall have suitable handling facilities.

- The details of pumps should match with the drive motors throughout the working life of these equipments and to meet operational requirement. High-speed motors of 3000 rpm shall not be used, as for as practicable. However for low flow and high head rpm of 2900 will be accepted on case to case basis. Working hour meter shall be provided on control panels to monitor conditions and subsequent ageing / reduced efficiency, etc.

© 2022 MECON Limited All rights reserved

- Vibration readings, etc. of new installation shall be supplied.
- Pumps shall be installed and commissioned as per manufacturer's instructions. A continuous running for 72 hours shall be required before final acceptance is given to the pumping installation.

4.01.01 **Shop testing of pumps**

- All materials, casting and forging shall be of tested quality.
- Pump casing shall be of robust construction and hydrostatically tested at 200% of the rated pressure or 150 % shut off pressure, whichever is higher. The test pressure shall be maintained for at least 15 minutes.
- The impellers along with any other un-machined rotating parts shall be tested for proper balancing in order to avoid undue vibration during operation.
- Performance tests shall be carried on each centrifugal pump. Performance test shall be made to determine the following.

  a) The discharge against a specified head when running at a specified speed under a specific suction head.

  b) The power absorbed by the pump at the shaft (BHP) under the above-specified conditions.

  c) Efficiency of the pump under the above specified conditions.

  d) Variation of required NPSH with discharge.

- The pump accessories like bearings, couplings etc. shall be subject to shop tests as per manufacturer's standards.
- The materials of construction of various components of all equipment and material covered under the scope of his specification shall be certified by the contractor with regard to their compliance to specifications laid down for them under relevant clauses of applicable standards and /or the manufacturing drawings of the contractor duly approved by the purchaser. Formal material test certificates to the effect shall be issued by the contractor.
- All test results and certificates including material test certificates shall be submitted for approval to the purchaser before dispatch of equipment.

A stainless-steel name plate shall be furnished and securely attached by stainless steel pins at an easily accessible point on the pump. The plate shall be stamped with the following minimum information: -

- Name of Manufacturer

© 2022 MECON Limited All rights reserved

- Model No.
- Purchaser's item no. or tag No.
- Serial number of pump
- Capacity in cubic meters per hour
- Pumping head in meters of liquid column
- Specific gravity of liquid pumped
- Revolutions per minute
- Pump input power, kW
- Motor rating, kW
- Design code IS/IPSS:

© 2022 MECON Limited All rights reserved

4.01.02 MATERIAL OF CONSTRUCTION FOR PUMPS

A) HORIZONTAL PUMPS:

Sl. No	ITEM	MATERIAL						
		Clear water/ Industrial Water (upto 12 kg/cm2)	Clear water/ Industrial Water (above12 kg/cm2)	Soft Water	DM Water	Drinking Water / Fire water	Scale / Slurry Water	Surface Drain Water
a)	Casing	CI IS: 210 FG260	WCB	WCB	CF-8M	CI IS: 210 FG260	CI FG 260 2.5% NiCI or Chrome alloy BHN above 500	CI FG 260 2% NiCI
b)	Impeller	CF8M	CF8M	CF8M	CF8M	LTB 2 BR/ CF 8M	CA6NM or Chrome alloy BHN above 500	CIFG 260 2%NiCI
c)	Shaft	EN8	EN8	EN8	EN8	EN8	EN8	EN8
d)	Shaft sleeve	SS410	SS410	SS410	SS410	SS410	Chrome alloy BHN above 500	SS410
e)	Wearing rings	CI IS: 210 FG260	CI IS: 210 FG260	CI IS: 210 FG260	CI IS: 210 FG260	CI IS: 210 FG260	Chrome alloy BHN above 500	CI IS: 210 FG260
f)	Shims & packings	Bass IS: 442	Brass IS: 442	Brass IS: 442	Brass IS: 442	Brass IS: 442	Brass IS: 442	Brass IS: 442
g)	Neck ring	CI FG 260	CI FG 260	CI FG 260	CI FG 260	CI FG 260	Chrome alloy BHN above 500	CI FG 260
h)	Lantern ring	CI FG 220	CI FG 220	CI FG 220	CI FG 220	CI FG 220	CI FG 220	CI FG 220
i)	Gland	CI FG 220	CI FG 220	CI FG 220	CI FG 220	CI FG 220	CI FG 220	CI FG 220

© 2022 MECON Limited All rights reserved

Sl. No	ITEM	MATERIAL						
		Clear water/ Industrial Water (upto 12 kg/cm2)	Clear water/ Industrial Water (above12 kg/cm2)	Soft Water	DM Water	Drinking Water / Fire water	Scale / Slurry Water	Surface Drain Water
j)	Bearing end cover	CI FG 220	CI FG 220	CI FG 220	CI FG 220	CI FG 220	CI FG 220	CI FG 220
k)	Bearing Housing	CI FG 220	CI FG 220	CI FG 220	CI FG 220	CI FG 220	CI FG 220	CI FG 220
l)	Coupling Pump & motor	CI FG 260	CI FG 260	CI FG 260	CI FG 260	CI FG 260	CI FG 260	CI FG 260
m)	'O' rings	Nitrile Rubber	Nitrile Rubber	Nitrile Rubber	Nitrile Rubber	Nitrile Rubber	Nitrile Rubber	Nitrile Rubber
n)	Sleeve nuts	SS 410	SS 410	SS 410	SS 410	SS 410	SS 410	SS 410
o)	Cowl nuts	SS410	SS410	SS410	SS410	SS410	SS410	SS410
p)	Base plate	MS Fabricated	MS Fabricated	MS Fabricated	MS Fabricated	MS Fabricated	MS Fabricated	MS Fabricated

Note:
All pumps handling soft / DM water shall be provided with Mech. Seal.

© 2022 MECON Limited All rights reserved

B) VERTICAL PUMPS:

Sl. No	ITEM	MATERIAL
1	IMPELLER	19-10 Molybdenum Austenitic Stainless Steel AISI-316 or ASTM A296 CF 8M
2	CASING/ BOWL	2.5% Ni CI
3	CASING RING	CAST IRON (IS 210 FG 260)
4	LINE SHAFT	Chromium Steel AISI-410
5	SHAFT SLEEVE	SS – 410
6	GLAND	CAST IRON
7	BASE FRAME	M.S FABRICATED
8	COMPANION FLANGES	M.S
9	COLUMN PIPE & DISCHARGE HEAD	Carbon Steel IS-2062-1992
10	SUCTION STRAINER	MS GALVANISED

4.02 VERTICAL TURBINE PUMP

Vertical Turbine Pumps along with their auxiliary equipment shall be suitable for the required duty conditions and shall be designed and manufactured for continuous duty at full load.

The vertical turbine pump shall be designed, manufactured and tested as per IS: 1710 – 1989 (Reaffirmed 1999).

The motor rating shall be maximum of the following requirements: -

a. 15% margin over the pump shaft input power at the rated conditions.
b. 5% margin over the maximum pump shaft input power required within its operating range including the shut-off point.

The above margin shall be in addition to temperature derating.
Capacity Vs discharge pressure curve for each pump shall preferably be continuously drooping from the shut-off point to the rated operation point and be suitable for parallel operation. The pumps shall be designed to avoid cavitation at any of the operating points. The characteristic of the pump shall be non-over loading type.

The required duty range for a pump shall be on stable portion of its head-capacity curve close to the best efficiency point. The head developed at the best efficiency point shall be close to the required differential pressure so that throttling is not required at pump discharge.

The equipment and auxiliaries shall be designed for quick and economical maintenance. The equipment design shall incorporate provisions for reduction in noise level.

The rotating elements of the pumps shall be checked for critical speed in bending as well

© 2022 MECON Limited All rights reserved

as torsion. The critical speeds shall be at least 30% away from the normal speeds for units with flexible shafts and at least 20% away from the maximum operating sped in case of stiff shafts.

The pumps shall be capable of reverse rotation upto 125% of rated speed due to reverse flow of water.

All passages inside the pump casing and impellers, which may be inaccessible to machining, shall be ground to a smooth finish as far as practicable.

The direction of rotation shall be clearly marked on a separate metal plate arrow securely fitted to the casing.

A stainless-steel name plate shall be furnished and securely attached by stainless steel pins at an easily accessible point on the pump. The plate shall be stamped with the following minimum information: -

- Name of Manufacturer
- Model No.
- Purchaser's item no. or tag No.
- Serial number of pump
- Capacity in cubic meters per hour
- Pumping head in meters of liquid column
- Specific gravity of liquid pumped
- Revolutions per minute
- Pump input power, kW
- Motor rating, kW
- Design code IS/IPSS

4.02.01 INSPECTION & TESTING

The tests to be conducted at shop for various sub-assemblies/ assemblies of equipment shall include, but not limited to the following:

I. Material/ identification tests for all the components of the pump
II. NDT as indicated below:

(a) Impeller:	Dye Penetration Test (DPT)
(b) Shaft:	DPT and Ultrasonic test
(c) Wearing rings:	DPT
(d) Impeller:	dynamic balancing
(e) Pump assembly:	Visual inspection

III. Hydrostatic test:

Hydrostatic test shall be done for the following components at a minimum pressure of 200% of shut-off head. The test pressure shall be maintained for at least one hour.

© 2022 MECON Limited All rights reserved

(a) Bowl
(b) Suction bell
(c) Discharge head
(d) Column pipe

IV. Performance test:

Performance test shall be conducted on each pump with one of the actual drive motors at the manufacturer's works in presence of Purchaser's representative as per the requirements of the relevant test codes.

Performance tests shall be conducted at rated r.p.m. to cover the entire range of operation of the pumps. These shall at least cover the range from shut-off point upto 1.3 times the rated capacity of pumps. A minimum of 5 readings shall be taken for capacity Vs Head, covering the above range. After performance test, the pump shall be dismantled for inspection of internal components.

Mechanical run test shall be carried on all pumps to demonstrate smooth running of the pumps, measurement of noise levels, vibration, etc. This test shall be carried out at site also and the site test shall be taken for acceptance of the pump. The noise level shall not exceed 85 dB at 1.0 m distance from the pump or as per the latest norm whichever is less.

The pumps shall be tested for vibration at the guarantee points. Vibration limit shall be as per Hydraulic Institute Standard/ API 610.

The following tolerances shall apply for the performance tests: -
i) Rated capacity: +2.5% at rated head
ii) Efficiency at rated capacity: No negative tolerance

Test reports and manufacturer's test certificates shall be submitted to the Purchaser/ Consultant for approval.

The final tests shall be conducted in the presence of the Purchaser's representative. Test certificates for different tests shall be made available to the Purchaser during the inspection. Material test certificates for bought out items shall be obtained from original manufacturer/ reputed test house. For all bought out items, test certificates as relevant to the items shall be furnished by the Contractor.

All the pumps shall be subject to stage inspection by the Contractor's own inspecting authority. However, Purchaser's Inspector may visit the works from time to time who should have free access to all the places of the manufacturing premises where any part/ parts are under manufacture.

The Contractor's inspecting authority shall have a close surveillance in respect of the quality of job for the design dimensions, tolerances, surface finish, etc.

© 2022 MECON Limited All rights reserved

4.03 List of Mandatory Spares for Pump sets

In general, the spares to be supplied with pump sets shall include the following. The spares are intended to cover all wearable/damageable delicate items of the plant.

For all Centrifugal Pumps:

Impeller	: 1 no. for each variety
Impeller shaft and keys	: 1 no. for each variety
Bearings for pump	: 1 set for each variety
Shaft sleeves	: 1 no. for each variety
Casing & Impeller wearing rings	: 1 set for each variety
Gland sealing arrangement (Mech. seal)	: 1 set for each variety
Washers of all sizes/types used	: 2 set for each variety
Pump and motor coupling	: 1 no. for each variety
Coupling pads/bushes	: 1 set for each variety
Impeller lock nuts	: 2 nos. for each variety
Gasket	: 1 set of each type
`O' ring	: 1 set of each type
Impeller sealing ring	: 2 nos. for each type
Pump motor bearings	: 1 set of each type

4.04 <u>DIESEL ENGINE FOR PUMP SET</u>

A) General

- The diesel engine shall be complete with all standard accessories, battery sets, battery charger, instruments & control panel, base frame etc. The noise level for diesel engine shall not exceed 85dBA at 1.0m distance or as per the latest CPCB (Central Pollution Control Board) norms. If required Acoustic enclosure to be provided

- The diesel engine shall be compression ignition mechanical direct injection type, capable of being started by a battery powered electric starter motor, and shall accept full load within 15 seconds from the receipt of signal to start.

- The diesel engine shall be natural aspirated, super charged or turbo charged and either air or water-cooled. In case of charge air cooling by means of a belt driven fan or of a belt driven auxiliary water pump, there shall be multiple belts such that half the belts should be capable of driving the fan or pump.

- The diesel engine shall be capable of operating continuously (24 hours) on full load.

- The diesel engine shall be provided with an automatically adjustable governor to control the engine speed with 10% of its rated speed, under any condition of load up to the full load rating. The governor shall be set to maintain rated pump speed at maximum pump load.

© 2022 MECON Limited All rights reserved

- The diesel engine shall be provided within-in-built tachometer to indicate the speed of the engine in rpm.

- Any manual device fitted to the engine, which could prevent the engine starting, shall return automatically to the normal position.

- Engines after correction for altitude and ambient temperature shall have bare engine horsepower rating of 10% in excess of maximum horse power required to drive the pump at its duty point.

- The coupling between the engine and the pump shall allow each unit to be removed without disturbing the other.

- The diesel engine capacity shall have a margin over its BHP absorbed at the pump shaft at duty point and the margin shall be 20% for engines of rating upto 200 HP and 15% for engines of rating above 200 HP.

B) Cooling System

- The engine shall be cooled by water from the discharge of the pump (takes off prior to the pump discharge valve) direct into the engine cylinder jackets via a pressure reducing device to limit the applied pressure to a safe value as specified by the engine manufacturer. The outlet connection from this system shall be terminated at least 150 mm above the engine water outlet pipe and be directed into an open tundish so that the discharge water is visible.

- The discharge from the engine shall be collected and drained into the nearest drainage channel.

C) Air Filtration

The air intake system ensures sufficient clean air to the engine. It shall incorporate the suction air filter, which shall be of oil bath type to supply clean air to the engine.

D) Exhaust System

The hot exhaust gases shall be let-off with suitable system. All the hot parts located at the working level shall be insulated. The exhaust system shall include:

- Exhaust manifold

- Silencer: The exhaust gas shall be let off through suitable silencer. The total back pressure shall not exceed the engine manufacturer's recommendation. Sufficient length of straight pipe shall be provided after the exhaust silencer to leave the gases at sufficient height 2 m above the roof of the engine room.

- Expansion joint in SS construction to reduce the forces and moment likely to be

© 2022 MECON Limited All rights reserved

transmitted on the engine frame.

E) Fuel System

- Fuel for the engine shall be high-speed diesel oil as per IS : 1460 – 1974.
- Fuel tank and fuel feed pipe shall be provided for the engine.
- The fuel tank shall have the capacity sufficient enough to allow the running of the engine at full load for 4 hours.
- The fuel tank shall be of welded steel construction. The tank shall be mounted above the engine fuel pump to give gravity feed. The tank shall be fitted with a level gauge calibrated in liters, filling in and cleaning hand holes, drain cocks, self supporting from and connection to the engine fuel oil system.
- Valves in the fuel feed pipe between the fuel tank and the engine shall be placed adjacent to the tank and they shall be located in open position. Plastic tubing shall not be used.
- A duplex filter to suitable capacity shall be provided for the fuel feed pipe between the fuel tank and fuel pump.
- Suitable sludge and sediment trap shall be provided for the fuel feeding system.
- The fuel tanks shall be supplied with hand pump for tapping the fuel tank from oil barrel.

F) Lubricating System

The lubrication system shall be self-contained with the following equipment.

- Sump: To store sufficient lube oil for circulation, suitable sump shall be located in the engine.
- Pump: Suitable pump for forced lubrication.
- Filter
- Lubricating oil cooler
- Interconnecting piping & tubes in seamless construction.

G) Starting System

The engine shall be capable of manual starting by electric starter motor**.** Since the pump driven by the diesel engine is not required to run continuously for long period and the operation will not be frequent, special features shall be built –in the engine to allow it to start within a very short period, even if it has been remained idle for a considerable long period.

The engine shall be designed in such a way that is shall be started by one operator, if

© 2022 MECON Limited All rights reserved

necessary, without any preliminary heating of the combustion chamber. All controls/mechanism, which has to be operated in the starting process, will be within easy reach of the operator.

Automatic cranking shall be effected by a battery driven 24V DC motor having high starting torque to have adequate ampere-hour capacity to provide the starting power for the diesel engine. A control panel for starting of the engine through battery to be provided. Engine START/STOP/TEST buttons shall be provided on control panel. The battery capacity shall be adequate for ten (10) Consecutive starts without recharging with a cold engine under full compression.

The battery shall be used exclusively for starting the diesel engine and kept fully charged all the time. Arrangement for both trickle and booster charge shall be provided. However, when the engine starts or is running, provision shall be kept to ensure that the charger is automatically disconnected and the battery is charged by the engine dynamo. At no times it should happen that the battery gets disconnected and is not available to start the engine.

The charger shall give constant D.C output voltage irrespective of incoming voltage variation specified. The charger shall be with fully controlled bridge circuit with diodes.

H) Governing System

The governor shall be fitted with a speed control device, which will control the speed under all conditions of load.

The governor shall offer the following features:

Engine should be provided with an adjustable governor capable of regulating engine speed within a range of 10% between shut-off and maximum load condition of the pump. The governor shall be set to maintain rated pump speed at maximum pump load. Engine shall be provided with an over-speed shutdown device. It shall be arranged to shut down the engine at a speed approximately 20% above rated engine speed and for manual reset, such that the automatic engine controller will continue to show an over-speed signal, until the device is manually reset to normal operating position.

The governor shall be capable of operating without external power supply.

I) Foundation Frame

Suitable foundation frame with foundation bolts & nuts shall be provided.

J) Instruments

The equipment shall be provided with necessary instruments to check the working of the engine continuously. The following instruments shall be minimum which will be provided and the same shall be fixed on a common instrumentation panel mounted directly on the engine base frame:

© 2022 MECON Limited All rights reserved

- Lubricating oil temperature indicator.
- Lubricating oil pressure indicator.
- Cooling water inlet temperature indicator.
- Cooling water outlet temperature indicator.
- Speed-cum-hour meter.

The pressure and temperature gauges shall be of reputed make. The following protections annunciation also shall be provided.

a. High cooling water outlet temperature
b. Low lubricating oil pressure

Any other instrument, control and protection equipment required for the safe operation of the engine shall also be provided.

All the pressure gauges, pressure transmitter, pressure switches etc. where viscous fluid enters inside the instruments shall be provided with diaphragm sealed flanged process connection with flanged isolation valves.

K) Spares & special tools

The Contractor shall furnish the list of spares & special tools including the following mandatory spares, in their scope of supply.

Two sets of fuel filters, elements & seals
Two sets of lubricating oil filters, elements & seals
Two sets of belts (where used)
Two sets of engine joints, gaskets & hoses
Two injector nozzles
Two complete sets of piston rings for each cylinder
Two inlet valve and two exhaust valves

In addition to the above, the bidder may include any other spare parts and special tools for maintenance/re-erection of the diesel engine/pump.

L) <u>Diesel Engine Tests</u>

Engine will be tested at test bed as per relevant standard as per details given below.

1) Before engine testing following details shall be recorded on engine test report.
   - Engine Sr. No.
   - Engine Model
   - Shop order No.
   - Fuel Pump Sr. No.
   - Ambient Temp and pressure
   - Testing Date
   - Test Bed No.
   - Tester/ Inspector

© 2022 MECON Limited All rights reserved

2) Start the engine and run at idle speed for some time.

3) Raise the load gradually and allow the performance parameter to reach steady state condition. Check power output at full throttle as per specification and adjust if necessary. Note down following parameters on engine test report.

- Time
- RPM
- Torque (N-M)
- BHP (Calculated)
- Fuel Pressure
- Fuel Rate
- Lube Oil Pressure
- Lube Oil Temperature
- Water Temperature
- Exhaust Temperature
- High Idle RPM
- Low Idle RPM
- Corresponding Lube Oil Pressure @ High Idle and Low Idle RPM
- Governing %

Above parameters will be recorded at following load and duration.

Full load	-	60 Minutes
10 % Over Load	-	60 Minutes

4) Engine will be tested with standard test bed facilities.

For each of the items being manufactured/supplied, the following test certificates and documents, as applicable, in requisite copies including original shall be submitted to the Inspection Agency. All test certificates shall be endorsed by the manufacturer and the Successful Tenderer with linkage to the project, purchase order and acceptance criteria.

i. Raw materials identification and physical and chemical test certificates for all materials used in manufacture of the equipment/pipe.
ii. Static/dynamic balancing certificate for rotating components/machines.
iii. Pressure test certificates.
iv. Performance tests certificates for all characteristics.

Inspection at manufacturers' works shall not relieve the Successful Tenderer of responsibility for replacing at his own cost any defective part/material and repairing equipment for defective workmanship that may be discovered at site at a later date.

M) Accessories for the diesel engine:

© 2022 MECON Limited All rights reserved

i. Oil tank: 1 set
ii. Oil piping: 1 set
iii. Coupling (flexible coupling connecting the shaft of pump and end engine coupling guard: 1 set
iv. Coupling guard: 1 Set
v. Battery: 2 nos. per diesel engine
vi. Battery charger: 1 no. per diesel engine
vii. Cabling: 1 Set
viii. Instrumentation: 1 Set
ix. Panel for the engine: 1 Set
x. Companion flanges (suction and delivery side) of pump along with bolts, nuts, gaskets and washers: 1 Set
xi. Exhaust piping along with common base plate, foundation bolts, nuts and washers: 1 Set

Contractor to provide diesel engine with all standard accessories, battery sets for auto starting, charger for battery, instrument & electrical panels, pressure switches etc. Rated power requirement of the diesel engine shall meet the requirement of clause no.7.4.5.2.3 of TAC manual (latest revision). The engine shall be capable of delivering the rated output continuously; (24 hours operation) shall run steadily at any load within its rated load, as specified in ISO: 3046. Suitable automatic governing system shall be provided. The fuel for the engine shall be high-speed diesel as per IS: 1460-1974. The diesel engine shall conform to Tariff Advisory Committee (TAC) requirements. The details refer to GTS. Exhaust pipe form the engine shall be extended beyond pump house and shall be terminated at 2 m above the roof of the building.

5.0 DESIGN CRITERIA FOR COOLING TOWERS

The cooling towers shall be multi-cell mechanical induced draft type (cross flow/counter flow type). The design wet bulb temperature of the site is 29.5^0 C. The approach of cold water to design wet bulb temperature shall be fixed based on the requirements.

The cooling towers shall be located near the re-circulating water pump house with necessary clearance from the adjoining structures and communication facilities.

The number of cells in each cooling tower shall be selected in such a manner that one no. of cell is spare and can be taken out for maintenance.

No. of installed Cell in Cooling Tower
= No. of working Cell (n)+ 1 No. Standby Cell (1)
= n + 1

Each cell shall be designed with 20% hydraulic overloading

The cooling towers and the accessories shall be designed and constructed in accordance with the latest applications provisions of Indian or International Standards in general and the following in particular.

© 2022 MECON Limited All rights reserved

PTC – 23 "ASME Performance Test Code for "atmospheric water-cooling equipment". Cooling tower institute of USA, Bulletin, ATP - 105 for "Acceptance Test Procedure"

IS: 401 for "Code of practice for preservation of timer"

The cooling towers design shall provide towers suitable for reliable operation in the climatic conditions prevailing at the site. In addition, the tower design shall include the following features for reliable operation and fog reduction under varying seasonal conditions:

- Large air to water volume ratio
- Highly effective draft eliminator design
- High fan cylinder air exit height
- Ability to function well with the fans operating continuously at design airflow under all operating conditions.
- Capability to adjust to the seasonal variations of circulating water flows.

The towers shall be designed to withstand the wind load and seismic load for the site. The tower layout shall facilitate location of fan drive motor on that side of the cylinder which will be upwind most of the time.

Noise level at 1 metre from CT fan motor & dewatering pump casing should not exceed 85 dB (A).

The cooling towers shall be complete in all respects and shall broadly conform to the following requirements.

The drift eliminator shall have sufficient mechanical strength to prevent it against bending & falling from its position. Drift eliminator to limit the drift losses to a less than 0.05%.

The cooling tower basin shall be of RCC construction and shall be epoxy painted from inside including connecting channel. The capacity of the basin shall be designed for approximately 10 minutes circulating water quantity. The basin shall have partitions for isolation of any cell of the tower. Each basin chamber shall be provided with a sludge pit with isolating valve complete with extended spindle and headstock. Each basin chamber shall be provided with an overflow of suitable chamber. Cold water outlet channel shall be suitably constructed of RCC for each cell of the cooling towers to facilitate the flow of cold water from the cold-water basin to the main collection channel.

Each cell of cooling tower shall be provided with one no. refuse retaining grate of GI at the outlet channel. The grate shall be fabricated from MS flats of 25 X 25 X 5 mm at 20 mm spacing between centre and shall be fixed at an inclination of 75 deg with the outlet channel. One no. double screen shall be provided at the outlet channel of each cell after the refuse retaining grate. The screen shall be replaceable type and made of stainless-steel wire mesh in hot dipped galvanized frame. SS wire-mesh screen shall be of 10 gauge and a mesh size of 25 mm. Guides for the screens shall be of C.I as per IS: 210-1993, FG 260.

© 2022 MECON Limited All rights reserved

Each cell of the cooling tower shall be provided with one multi-blade propeller type axial flow fan of adjustable pitch.

The fan deck shall be designed for a uniform loading of 300 kgf/m2. Fan decks shall be provided with drainage away from the fan cylinder and shall extend the full width of the cooling tower covering the water distribution system. The fan cylinder shall be of RCC / FRP (as per discretion of client/consultant) construction and shall be of velocity recovery venturi design. GI pipe handrail of one meter height in double rows shall be provided around the fan deck.

The cooling tower shall be provided with a stairway located at each and of the tower for access from ground level to the fan deck. The tower will be provided with longitudinal walkways, with handrails located at the cooling tower basin curb level on all sides.

The fan cylinder shall be true to diameter with due allowance of manufacturing tolerances to ensure trouble-free operation. Fans shall be provided with velocity-recovery type fan cylinder. The motors shall be located outside the fan cylinder, away from the hot and humid air system Access door shall be provided in the fan cylinder for inspection and maintenance purposes.

The tower shall be provided with complete water distribution system including piping, flow control valves and distribution nozzles. Header isolating valves for the tower and water distribution valves for each cell shall be provided. The flow control valve from hot water return header to individual cell shall be of Cast iron.

One number each pressure gauge and temperature gauge shall be provided on each hot water riser main.

The cooling tower shall be equipped with suitable material handling devices of appropriate capacity for removal and handling of equipment from the fan deck to the ground level. For cooling tower electrical hoist of suitable capacity shall be provided. Height of lift shall be adequate to lift/place material from the deck to ground and vice versa. For handling of screen, electrical hoist shall be provided with height of lift suitable to lift screen from & to ground.

The fan rotating assembly shall be statically balanced to ensure vibration-free operation. Each fan assembly shall be provided with vibration limit switches to de-energize the motor in the event of excessive vibration.

i) Normal vibration allowed in the cooling tower: 0.0127 cm
ii) Maximum vibration at which it trips : 0.0254 cm

Offline vibration monitoring system shall be provided to facilitate collection of vibration data with portable vibration spectrum analyzer for gearbox & fan motor. After collection of data for each fan, the data shall be transferred to PC platform for further analysis. The software provided in the PC shall retrieve the data for diagnosis of the vibration.

Diagnostic software IQ 2000 (EIRD) and portable data collectors cum analysers (EIRD

© 2022 MECON Limited All rights reserved

data PAC 1500, EIRD 890 & EIRD 885) or equv. Software to be provided. Suitable sensors, cables with connectors, JBs and other accessories etc. to be provided as per the requirement.

Cooling tower fan shall be multiple axial flow type, specially designed for low noise level and vibration free operation. The bolts, nuts and other hardware used for fixing the individual blades to the fan hub shall be selected with min. 20% margin over the power required at motor output terminal for the duty conditions.

Cooling tower fan shall be driven through right angle heavy duty, industrial type reduction gear assembly. Reduction gears shall be of oil bath, positive lubricate type, specially designed for service factor of 2 over fan rated brake power.

The enclosure to the gear box shall be totally enclosed and of weather-proof design to prevent ingress of water vapour into the lubricating oil. The gearbox shall be equipped with oil breather vent. Low oil level interlock for alarm shall be provided.

The gearbox oil shall be of non-hygroscopic type. The oil piping external to the gearbox shall be of galvanized steel of seamless construction conforming to IS: 1239 -2004 (Part-I) heavy grade. Connection between gearbox and external oil piping shall be through wire-reinforced flexible hose assembly. The piping shall be provided with adequate number of union fittings to enable dismantling. The gearbox shall have provision of remotely located sight glass for regular surveillance of quality and quantity of lubricating oil.

The drive shaft shall be designed for high safety factor and the drive shaft assembly shall be statically and dynamically balanced.

The fill and eliminators shall be built and arranged to permit ease of handling and removal from the tower. The fill and eliminator members shall be securely retained in position to prevent excessive sagging or falling out of position. All fill supports shall be of ample size to properly support their respective loads.

Proper illumination facilities for the fan deck and staircases shall be provided apart from area illumination. Cooling tower fan controls shall be located in the main PLC of water system.

Blow down water from the cooling towers shall be treated with RO and reused in the system or used in the circuits where less stringent quality water can be used like SGP, PCM, GCP, etc.

5.01 MATERIALS OF CONSTRUCTION FOR RCC COOLING TOWER

Sl No	Component	Material recommended
1.	Basin	R.C.C.
2.	Stairways, cell partition and fan deck	R.C.C.

© 2022 MECON Limited All rights reserved

Sl No	Component	Material recommended
3.	Fan cylinder	RCC
4.	Fill	PVC
5.	Support grids	Stainless steel wire mesh
6.	Drift eliminator	AC sheet/ PVC/Engg Plastic
7.	Fan blades	FRP/Aluminium Alloy
8.	Spray nozzles	Polypropylene
9.	Fan hub	MS Galvanised with GRP cover
10.	Drive shaft and Coupling, Class III	SS- 304
11.	Fasteners and hard wares	SS (AISI 304)
12.	Base frame for motor	MS Galvanised
13.	Yoke assembly for shaft	SS 304 / 316
14.	Fan Stack door	FRP
15.	Refuse Retaining grate	MS HDG
16.	Screen	SS 304 mesh on MS HDG frame
17.	Sluice gate	SS as per AWWA C-561

5.02 MATERIAL OF CONSTRUCTION FOR FRP COOLING TOWER

Sl No	Component	Material recommended
1.	Structural members / Supports	H.D.G. Steel
2.	Casing / Cladding	Fiber glass reinforced polyester (FRP)
3.	Fill	PVC
4.	Drift eliminator	PVC
5.	Louvres	PVC / FRP
6.	Cold water basin	RCC
7.	Hot water distribution system	PVC pipe with polypropylene nozzles / FRP basin with replaceable polypropylene nozzles installed in the basin floor.
8.	Access ladders	HDG
9.	Fan blades	FRP / Cast Aluminium
10.	Fan guard	G.I. wire
11.	Fan hub	HDG Steel / Aluminium
12.	Fan drive shaft	SS- 304
13.	Hard wares / Fasteners	SS.304
14.	All other steel and iron parts except distribution valves and gear cases	HDG Steel

6.0 DESIGN CRITERIA FOR PLATE HEAT EXCHANGERS:

6.01 EQUIPMENT SPECIFICATION

A) The heat exchanger unit shall consist of gasketed plates supported in frame capable of being

© 2022 MECON Limited All rights reserved

opened and closed. The frame provides structural support as well as pressure containment for the gasketed plates and consists of frame plate, pressure plate, guide bar & carrying bars, closing studs/nuts and carrying bar supporting columns.

Wherever Plate Heat Exchangers are envisaged, one number Plate Heat Exchanger should be installed in addition to the required number of Plate Heat Exchangers.

No. of installed Heat Exchangers
= No. of working Heat Exchanger (n)+ 1 No. Standby Heat Exchanger (1)
= n + 1

B) The frame shall be designed to permit future installation of 30% additional plates.

C) Each plate heat exchanger shall be designed for full pressure in each stream having no pressure on other stream.

D) While designing heat exchange area and number of plates, cleanliness factor on account of fouling shall be considered as 20%.

E) Carbon steel components in contact with fluid system shall have a corrosion allowance of min 3mm. All the threaded hardware items like studs and nuts shall be zinc coated.

F) Minimum thickness of stainless-steel plate shall be 0.5 mm.

G) Frame plate in the primary stationary end of the plate heat exchanger. All nozzles shall be located on frame plate.

H) Inspection openings shall be provided on the pressure plates. The openings shall be blanked by providing blind flanges. Ball valves shall be provided on the bottom blind flanges for drain purposes. Handles are to be provided on all the blind flanges.

I) All nozzles on the frame plate and inspection openings on pressure plate shall be provided with stainless steel sheet lining conforming to AISI 316.

J) Pressure plate shall be supported in a roller bearing hanger from the carrying bar. Pressure plate shall move along the carrying bar and shall be guided by the guide bar.

K) The carrying bar shall be welded to the frame plate and carrying bar support column. A stainless-steel tee section shall be welded to the carrying bar to provide mounting member for the plates of the plate pack. A smooth surface shall be provided for roller bearing carrying groove for the whole length of the carrying bar. Carrying bar shall be designed to support 1.5 times the weight of the flooded exchanger along with pressure plate, tie rods, nuts and nozzles.

L) Guide bar shall be welded to the frame plate and carrying bar supporting column. It shall be sheathed in stainless steel on the 3 surfaces coming in contact with the plates and is a guide bar only for the plates.

© 2022 MECON Limited All rights reserved

M) Minimum diameter of tie rod shall be 19 mm.

N) Carbon steel boiler quality plates shall be as per SA 515/516 Grade 60.

O) Plates having thickness of 16 to 50 mm shall be examined ultrasonically as per ASTM A 435.

P) The heat exchangers shall be designed, manufactured and tested as per ASME code Section VIII, Div. 1 and shall be suitable for the duty conditions and capacities as required.

Q) The plate heat exchangers along with their auxiliary equipment shall be suitable for the required duty conditions and shall be designed and constructed for continuous duty.

R) The equipment and auxiliaries shall be designed for quick and economical maintenance. The equipment shall be easily dismantled without disturbing the inlet and outlet pipe connections.

S) By-pass arrangement with isolation valves shall be provided on the heat exchanger for using it during commissioning and subsequent maintenance.

T) Stainless steel nameplate shall be furnished and securely attached by stainless steel pins at an easily accessible point on each plate heat exchanger. The plate shall be stamped with the following minimum information: -

- Purchaser's item no. or tag in 15 mm high letters.
- Serial number of plate heat exchanger
- Capacity in cubic meters per hour both for primary & secondary sides.
- Temperature ranges for primary & secondary liquids.
- Pressure drop in Primary & Secondary sides
- Design code.

6.02 INSPECTION & TESTING

a) The tests to be conducted at shop for various sub-assemblies/assemblies of equipment shall include, but not limited to the following:

- Material test
- Testing during manufacture/fabrication like dye penetration tests on randomly selected plates, high intensity light check for plates
- Dimensional checking
- Hydrostatic tests
- Ultrasonic test for the plates used for frame and pressure plates.
- Vacuum chamber test linked with helium crack detection test on all the plates to be carried.

b) All the plate heat exchangers shall be subject to stage inspection by the successful tenderer's own inspecting authority. However, Purchaser's Inspector may visit the works

© 2022 MECON Limited All rights reserved

from time to time and who shall have free access to all the places of the manufacturing premises where any part/parts are under manufacturing.

c) The successful tenderer's inspecting authority shall keep a close surveillance in respect of the quality of job for the design dimensions, tolerances, surface finish etc.

Before giving call for final inspection, all the documents shall be furnished to the Purchaser. The record of manufacturing details, inspection and tests carried out by the successful tenderer shall be made available to the final Inspecting Authority. However, approval and final inspection at the manufacturing works shall not relieve the successful Tenderer of responsibility of replacing at his cost any defective part/material which may be detected by the purchaser during erection and commissioning or guarantee period.

Hydrostatic test shall be carried out at 1.5 times the design pressure maintaining test pressure for a minimum of 60 minutes. Testing shall be done by pressurising each side separately.

d) The final tests shall be conducted in the presence of the Purchaser's representative. Test certificates for different tests shall be made available to the Purchaser. Material test certificates for bought out items shall be obtained from original manufacturer/reputed test house. For all bought out items, test certificates as relevant to the items shall be furnished by the successful Tenderer before the equipment is offered for final inspection.

e) Wherever required, all tests shall be done as per relevant Indian Standards. In the absence of the Indian Standard, the equivalent internationally reputed standards shall be followed.

6.03 PAINTING

a) Surface of the heat exchanger frame work shall be cleaned to near white metal conforming to Sa 2 1/2 of Swedish Std. SIS 055900 or German Std DIN 55928 (Part-4)
b) After surface preparation, the plate heat exchanger shall be painted as per the manufacturer’s standard.

6.04 ACCEPTANCE TESTS

Acceptance tests shall be carried out by the successful Tenderer after commissioning. These tests shall be performed according to code of practice of HEI of USA or other mutually agreed procedure in the presence of Purchaser's representative. All instruments required for the test shall be arranged by the successful Tenderer. In Case during the tests the heat exchanger performance falls short of guarantee figures, the successful Tenderer shall bear all expenses of improving the performance of the heat exchanger and shall carry out another acceptance test at no extra cost. In case the performance is again unsatisfactory, the successful Tenderer shall be liable to replace the subject equipment by new and better equipment at no extra cost without affecting the overall schedule of the commissioning of the Main Plant.

© 2022 MECON Limited All rights reserved

6.05 GUARANTEE

a) All equipment shall be guaranteed for good workmanship, no material defect and the design parameters for a period as per Contract Agreement
b) The Contractor shall stand guarantee that the heat exchanger shall cool the required quantity of primary water with the specified quantity of secondary water to the temperatures stipulated in Contract. The Contractor shall also guarantee the agreed pressure drops across the primary & secondary sides of heat exchanger. In addition, all items of the heat exchanger are to be guaranteed in respect of material and workmanship. Any defects found during warranty period shall be rectified to the complete satisfaction of the purchaser at the Contractor's cost.

6.06 PENALTY

a) No negative tolerance on the "Overall heat transfer coefficient" of the plate heat exchangers shall be permitted.
b) For every 1% shortfall in the overall heat transfer coefficient, 1% contract value shall be levied as penalty. This shall be applicable for the overall heat transfer coefficient up to 95% of the guaranteed value.
c) For overall heat transfer projection less than 95% of the guaranteed value, the heat exchangers shall be rejected.
d) No positive tolerances on the pressure drop in the heat exchangers shall be permitted.
e) For every 1% shortfall in the overall heat transfer coefficient, 1% contract value shall be levied as penalty. This shall be applicable for the overall heat transfer coefficient up to 95% of the guaranteed value.
f) For pressure drop of more than 5% of the guaranteed value heat exchangers shall be rejected.
g) Guaranteed overall heat transfer coefficients offered by the successful Tenderer shall hold good if the variation in the flow rates is within + 2O% of the flow rates.

7.0 <u>DESIGN CRITERIA FOR SOFT WATER PLANT</u>

7.01 Two-Stream (1W+1R) fully automatic (except salt handling & brine preparation) PLC controlled soft water plant of 100% capacity each shall be provided with requisite controls & instruments for auto operation of the plant. Necessary WASTE WATER treatment shall be provided for the effluent generated from soft water plant. The waste water generated shall be treated for reuse in other system. The prevailing pollution control acts shall be binding for selection, erection and operation of these units. Each stream of soft water plant shall be provided with pressure filter, activated carbon filter and softener of required capacities with interchangeability provisions.

The regeneration cycle and back washing cycle shall be at an interval of 20 hours. Water required for internal consumption like regeneration, back washing etc. shall be additional to the capacities indicated above.

Water from clarified water storage tank shall be pumped into PSF followed by the activated carbon filter for removal of excess chlorine, oil, colour and traces of iron and organic.

© 2022 MECON Limited All rights reserved

The effluent discharged during backwashing/ regeneration shall be led to a lined neutralisation pit of two compartments through acid/ alkali proof drain. Necessary chemicals shall be added to neutralise the effluent water.

Resin traps shall be provided on the pipeline at the outlet of each exchanger. Media traps shall be provided on the pipeline at the outlet of each activated carbon filter.

Panic showers, washing facilities and drinking water pipeline connection for laboratory and other units shall be provided.

7.02 The scope of work shall include the following items for each of the softening plant as specified below:

- Supply of Pressure Filters and Activated carbon filters for filtration of makeup water prior to entering softener vessels with following accessories:

a) Air blowers
b) Frontal piping
c) Pipe headers
d) Pneumatic operated valves
e) Requisite no. of companion flanges, Gaskets, Bolts, nuts & washers
f) Media trap
g) Foundation bolts
h) Electrics
i) Instrumentation
j) Pipe supports, etc.
k) Initial fill of filter media

- Supply of softeners with the following accessories

(a) Brine saturator (30 days capacity)
(b) Brine measuring tank
(c) Ejector
(d) Frontal piping
(e) Pipe headers
(f) Valves
(g) Requisite no. of companion flanges, Gaskets, Bolts, nuts & washers.
(h) Instrumentation
(i) Pipe supports, etc
(j) Initial fill of resin

7.02.01 Initial fill of oils, lubricants, consumables, filter media, resins for all exchangers, degasser tower packing, chemicals & reagents and supply of commissioning chemicals as applicable shall be included in the scope of supply.

7.02.02 The scope of supply of also includes supply of Laboratory test kits for measuring hardness, chlorides, TDS and pH.

© 2022 MECON Limited All rights reserved

7.02.03 Softening of water shall be necessarily by the ion exchange method. Hot cold lime softening shall not be acceptable.

7.02.04 Scope of work of includes Air blowers, frontal piping, Pipe headers, Pneumatic operated valves, Requisite no. of companion flanges, Gaskets, Bolts, Nuts & washers, Foundation bolts, Electrics, Instrumentation, Pipe supports, Initial fill of filter media.

7.02.05 The accessories to be supplied are Brine saturator (30 days capacity), Brine measuring tank, ACF, DMF/PSF, Ejector, Frontal piping, Piping headers, Valves, Requisite no. of companion flanges, Gaskets, Bolts, Nuts & washers, Foundation bolts, Instrumentation, Pipe supports etc. Initial fill of resin.

7.02.06 Carbon steel plates as per SPM A285.C. or ASTM A515 Gr. 55 to 70 or IS: 2002 Gr. 2a can be used for the temperature range of (-) 29^0C to 200^0C.

7.02.07 Structural steel as per IS: 2062 may be used for thickness above 20 mm and as per IS:2062 St 425 for thickness up to 20 mm

7.02.08 Piping material shall be as per ASTM A- 106. ASTM A-53 or API-5L may be used for internal piping

7.02.09 Softener resin used shall be compatible with the influent water analysis.

7.02.10 Catalogues of activated carbon and resins to be submitted.

7.03 Pressure Filters

The pressure filters and the connected equipment shall be designed, manufactured and tested as per relevant IS/IPSS or as per other international standards acceptable to the Purchaser and shall be suitable for the duty conditions and capacities as indicated.

Mode of operation of the pressure filters shall be semi-automatic. Initiation of backwashing is by the operator from the Control Panel. Process of the backwashing and bringing the filter to the normal stream to be done automatically. Double flanged butterfly valves with rack and pinion type rotary pneumatic actuators shall be provided for this purpose.

The surface loading shall be 10 $m^3/hr/m^2$.

The design, fabrication, inspection and testing of the pressure filter shall conform to IS: 2825- 1969 (RA 1984) / ASME / International standard.

At least 60% of free board shall be left over the filtering media. Media traps shall be provided at the outlet of each filter.

The pressure filters shall have air scouring facility prior to back washing.

Back wash cycle for each filter shall be once in every 24 hrs with 20 hrs service cycle.

© 2022 MECON Limited All rights reserved

Backwash water overhead tank shall be provided for backwashing of pressure filter. The tank shall be of effective storage capacity suitable for two backwashes and shall be provided on top of the filter house with staging height of 15m. Necessary inlet & outlet piping connections to the proposed backwash water overhead tank and pressure filters along with all valves, fittings, instrumentation, pipe supports etc. shall be provided with compartments and required capacity and staging height for back washing of filters. The complete piping from the backwash water tank to all the filters for supplying the back wash water to be provided. Drain and overflow pipelines with valves for all the back wash tanks to be provided.

Media traps shall be provided at the outlet of each filter.

Suspended solids content in the filtered water shall not exceed 5 ppm.

The piping system and control valves shall be provided in front of the vessel for smooth operation. The same shall include contaminated water inlet, filtered water outlet, back wash inlet, waste water outlet, drain, air scouring and air vent.

Pressure filters shall be provided with access manholes for filling and charging of gravel, sand and for maintenance purposes.

Pressure filters shall be of vertical type and shall be provided with built in legs with proper supports to the concrete.

The filter shall be provided with unfiltered water distributors and header lateral type under-drain collecting system.

Maximum pressure loss across the filters should not be more than 5 mWc.

- The minimum depth of filtering media bed shall be decided on the basis of the filter media offered and shall not be less than 750 mm. At least 60% of free board shall be provided over the filtering media bed.
- The pressure filters shall have air scouring facility prior to backwashing for which the Contractor shall provide two air blowers (1W + 1R) complete with accessories and entire piping with valves.
- Backwash water OH Tank of suitable capacity and head will be provided.
- Necessary piping system and control valves shall be provided for the filter for smooth operation. The same shall include influent water inlet, filtered water outlet, backwash water inlet, waste wash water outlet, air scouring inlet, air vent, drain cock, sampling cocks etc. All valves shall have flanged connections and shall be supplied by the Contractor with matching flanges, nuts, bolts and gaskets.
- Pressure filters shall be provided with access manholes of minimum 500 mm size for enabling the filling and changing of filter media and for maintenance purposes.
- Filters shall be of vertical / horizontal type and shall be provided with built in legs.
- The filter shall be provided with inlet water distributors and header - lateral type under drain collecting system.
- Sampling points along with valves for inlet and outlet water shall be provided.

© 2022 MECON Limited All rights reserved

- Maximum pressure loss across the filters shall not be more than 5 mWC.
- Inspection opening shall be provided to inspect the internals and filtering media.
- The pressure filter vessel shall be internally painted with 3 coats of anti – corrosive paint and shall be coated externally with a protective paint.
- Quality of outlet water shall be such that suspended solids content shall not exceed 5 ppm.

7.04 **Activated Carbon Filter**

The activated carbon filters and the connected equipment shall be designed, manufactured and tested as per relevant IS or as per other international standards acceptable to the Purchaser and shall be suitable for the input water quality.

The vessel shall be of vertical / horizontal type and be provided with built in legs. The pressure filter shall be provided with

i. The design of the vessel shall be as per IS: 2825- 1969 (RA 1984) /ASME SEC VIII, DIV.1.
ii. Piping system and control valves in front of the vessel for smooth operation. It shall include raw water inlet, filtered water outlet, back wash water inlet, drain connection, air inlet and air vent.
iii. Built in leg with proper supports to the concrete.
iv. Sampling points with isolation valves for inlet and outlet connection.
v. Under drain system shall be header lateral type or strainer on plate design. In case of strainer on plate design, access shall be provided below the bed plate. No sub-fill shall be used in case of header lateral design. Minimum bed depth shall be 1200 mm.
vi. Proper distribution system for Raw water inlet and Back washing to avoid channelling and clogging.
vii. Access manholes shall be provided and size shall be of 500 mm dia min.
viii. Carbon traps shall be provided at the outlet of each vessel.
ix. Back washing cycle shall be once in 24 hrs.
x. The filtration rate shall not exceed 15 $m^3/h/m^2$.
xi. 2 coats of epoxy-based primer and 3 coats of solvent free epoxy-based finishing paint shall be provided inside the vessel. The dry film thickness shall be 200 microns.
xii. At least 75% (of bed depth) freeboard shall be provided to allow expansion of the bed during back washing.
xiii. An orifice board for indicating the wash water flow. It shall be fitted in the drain sump.
xiv. An initial charge of filter media.

7.05 Softener/Base Exchanger

- The regeneration cycle shall be 20 hrs.
- The vessel shall be of vertical / horizontal type and be provided with built in legs.
- The design of the vessel shall be as per IS: 2825- 1969 (RA 1984) /ASME SEC VIII, DIV.1.
- The design surface flow rate shall not exceed 40 $m^3/h/m^2$.
- The base exchanger shall be painted outside with protective paint and

© 2022 MECON Limited All rights reserved

- Rubber lined from inside. Sand blasting of the vessel shall be done before Rubber lining. The Natural Rubber Lining shall be minimum 4.5mm thick and shall have a shore hardness of 65 +/- 5 Deg. (scale -A)

The base exchanger shall be provided with:

i) Access manholes for filling, changing of resin and also for maintenance purposes and transparent windows for knowing the level of resins.
ii) An internal collecting system for withdrawing the softened water. The strainers shall be of good quality polypropylene material. In case of strainer on plate design, access below the bed plate shall be provided.
iii) Brine shall be considered for regeneration of base exchanger.
iv) At least 80% free board shall be provided to allow expansion of the bed during back washing/addition of extra resin.
v) Distributor for distributing brine during regeneration.
vi) The collecting system as well as the distributor shall function in the reverse way during back washing.
vii) Built in legs with proper supports to the concrete base.
viii) An orifice board for indicating the wash water flow. It shall be fitted in the drain sump.
ix) Stainless steel sampling points of inlet and outlet water.
x) Resin trap at the outlet of each exchanger.
xi) Initial charges of resin of good quality of reputed make.
xii) It shall be on counter-current regeneration system.
xiii) The piping system and control valves in front of the vessel for smooth operation.

8.0 DESIGN CRITERIA FOR DM WATER PLANT

Two-Stream fully automatic PLC controlled DM water plant of 100% capacity each shall be provided in a civil building with RCC roof with suitable ventilation and underslung crane with requisite controls & instruments for auto operation of the plant. Necessary effluent treatment shall be provided. The treated water shall be disposed off to drainage system. The prevailing pollution control acts shall be binding for selection, erection and operation of these units.

The regeneration cycle and back washing cycle shall be at an interval of 20 hours. Water required for internal consumption like regeneration, back washing etc. shall be additional to the capacities indicated above.

DM Plant shall be installed in a covered civil building with RCC roof. The operation of DM Plant shall be designed to run on fully automatic operation basis.

Water from the makeup water system of the plant shall be considered as the source of raw water for DM Plant.

Water from clarified water storage tank shall be pumped into the activated carbon filter for removal of excess chlorine, oil, colour and traces of iron and organic.

Filtered water from activated carbon filter shall flow into cation exchanger where all

© 2022 MECON Limited All rights reserved

positive ions shall be removed. The water from the cation exchanger free from positive ions shall flow into the degasser where air shall be blown to remove CO_2. The degassed water shall be stored in a degassed water storage tanks.
The degassed water from the degassed water tanks shall be pumped into the anion exchangers where all negative ions shall be removed. The water from the anion exchangers shall flow into the mixed bed for the removal/polishing of the remaining positive and negative ions. The DM water from the mixed bed shall flow into the DM water storage tanks. From the DM water storage tanks, the demineralised water shall be pumped upto the battery limit.

The effluent discharged during backwashing/ regeneration shall be led to a lined neutralisation pit of two compartments through acid/ alkali proof drain. Necessary chemicals shall be added to neutralise the effluent water. The effluent water is to be taken to multiple effect evaporator to achieve zero discharge.

Hydrochloric acid and sodium hydroxide (lye) shall be used as regenerants. Regeneration system for the cation exchanger, anion exchanger, and mixed bed exchanger shall consist of acid storage tanks, alkali storage tanks, measuring tanks, ejectors, pipes, valves and density indicator.
Acid/alkali unloading pumps/with necessary pipes, hoses and valves from road tanker to storage tank shall be provided.

Resin traps shall be provided on the pipeline at the outlet of each exchanger. Media traps shall be provided on the pipeline at the outlet of each activated carbon filter.

Panic showers, washing facilities and drinking water pipeline connection for laboratory and other units shall be provided.

8.01 DESIGN AND CONSTRUCTIONAL DETAILS

The DM Water Plant shall be complete in all respect. The design and constructional details of various equipment are given below:

8.01.01 Clarified water tank

Make up/ clarified water shall be received by gravity/ under residual head in a RCC water tank having 2 compartments. Each tank shall epoxy painted from inside and have inlet, outlet, overflow, drain connections with necessary level indicators, isolation valves and pipes, etc.

8.01.02 Pressure Filters: For details refer relevant clauses of Chapter 07.

8.01.03 Activated Carbon Filter: For details refer relevant clauses of Chapter 07.

8.01.04 Cation exchanger

The regeneration cycle shall be 20 hrs.

© 2022 MECON Limited All rights reserved

The vessel shall be of vertical / horizontal type and be provided with built in legs. The design of the vessel shall be as per ASME SEC-VIII, DIV.1. The design surface flow rate shall not exceed 40 $m^3/h/m^2$.

The cation exchanger shall be painted outside with protective paint and rubber lined from inside. Sand blasting of the vessel shall be done before rubber lining. The Natural Rubber Lining shall be minimum 4.5mm thick and shall have a shore hardness of 65 $\pm$ 5 Deg. (scale -A)
The cation-exchanger shall be provided with:

i) Access manholes for filling, changing of resin and also for maintenance purposes and transparent windows for knowing the level of resins.
ii) An internal collecting system for withdrawing the cationic/ softened water. The strainers shall be of good quality polypropylene material. In case of strainer on plate design, access below the bed plate shall be provided.
iii) HCl shall be considered for regeneration of cation exchanger resin.
iv) At least 80% free board shall be provided to allow expansion of the bed during back washing/addition of extra resin.
v) Distributor for distributing acid during regeneration.
vi) The collecting system as well as the distributor shall function in the reverse way during back washing.
vii) Built in legs with proper supports to the concrete base.
viii) An orifice board for indicating the wash water flow. It shall be fitted in the drain sump.
ix) Stainless steel sampling points of inlet and outlet water.
x) Resin trap at the outlet of each exchanger.
xi) Initial charges of resin of good quality of reputed make.
xii) It shall be on counter-current regeneration system.
xiii) The piping system and control valves in front of the vessel for smooth operation

8.01.05 **Degasser**

i) The degasser shall be forced draft, counter flow type with polypropylene fill complete with staircase etc.

ii) The degasser shall be fitted over the degassed water tank and it shall be air tight.
iii) It shall be fitted with sprayer at the top for proper spraying of cationic water. An air vent shall be provided at the top for removal of CO_2. The inlet distributor shall be of header lateral system. Material of construction for degasser shall be carbon steel as per IS:2062-2011. The degasser shall be lined on the inside surface with natural rubber lining (4.5mm thick) and the outside surface shall be painted with chlorinated rubber paint. The tower hood should be of stainless steel. Air duct from blower to degasser shall be of FRP.
iv) The degasser shall be fitted with connections for blowing air. It shall be complete in all respects. (Blowing rate shall be furnished).
v) Sump level control shall be for dry running protection of degasser pumps.

© 2022 MECON Limited All rights reserved

Degassed water tank

i) The degassed water tank shall be horizontal cylindrical shell type with dished ends. The design code shall be IS: 2825- 1969 (RA 1984) / ASME SECTION - VIII.

ii) Material of construction for degassed water tank shall be carbon steel as per IS:2062-2011. The tank shall be lined on the inside surface with natural rubber lining (4.5mm thick) and the outside surface shall be painted with 3 coats of chlorinated rubber paint.

iii) It shall be suitable for mounting on concrete supports. It shall be fitted with inlet, outlet, overflow and drain connections with necessary level indicators, valves and pipes. The capacity of tank shall be as per system requirement and approval of Purchaser / Consultant.

8.01.06 Anion exchanger

The regeneration cycle shall be 20 hours

The design surface flow rate shall not exceed 40 $m^3/h/m^2$.

The vessel shall be of vertical / horizontal type and be provided with built in legs. The design of the vessel shall be as per IS: 2825- 1969 (RA 1984) / ASME SEC-VIII, DIV.1.

The anion exchanger shall be painted outside with protective paint and rubber lined from inside. Sand blasting of the vessel shall be done before rubber lining. The Natural Rubber Lining shall be minimum 4.5mm thick and shall have a shore hardness of 65 $\pm$ 5 Deg. (scale-A)
The anion exchanger shall be provided with -

i) Access manholes for filling, changing of resin and also for maintenance purposes and transparent windows for knowing the level of resins.
ii) An internal collecting system for withdrawing the anionic water. The strainers shall be of good quality polypropylene material. In case of strainer on plate design, access below the bed plate shall be provided.
iii) At least 100 % (of bed depth) free board shall be provided.
iv) Distributor for distributing alkali during regeneration.
v) The collecting system as well as the distributor shall function in the reverse way during back washing.
vi) Built in legs with proper supports to the concrete base.
vii) An orifice board for indicating the wash water flow. It shall be fitted in the drain sump.
viii) Stainless steel sampling points of inlet and outlet water.
ix) An initial charge of resin of good quality of reputed makes.
x) It shall be on counter-current regeneration system.
xi) The piping system and control valves in front of the vessel for smooth operation.

© 2022 MECON Limited All rights reserved

8.01.07 Mixed bed exchanger

The regeneration cycle shall be 280 hrs.

The vessel shall be of vertical / horizontal type and be provided with built in legs. The design of the vessel shall be as per IS: 2825- 1969 (RA 1984) / ASME SEC-VIII. DIV.1.The design surface flow rate shall not exceed 60 $m^3/h/m^2$.

The M.B. exchanger shall be painted outside with protective paint and rubber lined from inside. Sand blasting of the vessel shall be done before rubber lining. The Natural Rubber Lining shall be minimum 4.5mm thick in three layers and shall have a shore hardness of 65 $\pm$ 5 Deg. (scale-A)

The M.B. exchanger shall be provided with:

i) Access man-holes for filling, changing of resin and also for maintenance purposes and transparent windows for knowing the level of resins.
ii) An internal collecting system for withdrawing the water. The strainers shall be of good quality polypropylene material. In case of strainer on plate design, access below the bed plate shall be provided.
iii) At least 100% free board shall be provided to allow expansion of the bed during back washing/addition of extra resin.
iv) Distributor for distributing alkali and separate distributor for distributing acid.
v) Proper resin trap at the outlet of each exchanger shall be provided.
vi) The collecting system as well as the distributor shall function in the reverse way during back washing. The resins shall be supported on a layer of graded pebbles.
vii) Built in legs with proper supports to the concrete base
viii) An orifice board for indicating the wash water flow. It shall be fitted in the drain sump.
ix) Stainless steel (SS 316L) sampling points of inlet and outlet water.
x) It shall be on co-current regeneration system.
xi) A separator for separation for resins during regeneration.
xii) Transparent windows at the resin separation and also at resin top level.
xiii) An initial charge of resin of good quality and reputed make for cation and anion resins. The anion resins shall be also effectively remove silica.

8.02 ION EXCHANGE RESINS

i) Make-up resins to be supplied shall be based on minimum resin attrition loss of three (3) percent and five (5) percent per annum for cation and anion respectively.
ii) All the resins shall be of proven quality.
iii) All resins shall be supplied in manufacturer's original sealed containers. No broken container shall be accepted.
iv) Subsequent top up of resins to all resin beds, if required, before the handover of the plant shall be made up by the Tenderer.

8.03 REGENERATION L E V E L , R E G E N E R A N T STRENGTH AND EXCHANGE

© 2022 MECON Limited All rights reserved

CAPACITY

i) Each resin bed shall be regenerated by employing optimum regeneration levels to prevent leakage of ions.
ii) The strength of acid regenerants at the cation bed inlet shall be within 5% W/W.
iii) Alkali regeneration system consisting of solution tanks, ejectors, etc. shall be so designed such that during regeneration, anion resin bed in anion exchanger is regenerated at about 5% (W/W) strength of alkali.
iv) 10% de-rating in exchange capacity of all types of exchangers is mandatory.

8.04 EXCHANGER RESIN REGENERATION SYSTEM.

Regeneration system should be so designed that at a time either cation, anion or mixed bed unit of a particular stream is regenerated. Provision for simultaneous regeneration of cation and anion bed units to be kept to minimise the outage due to regeneration of ion-exchange vessels.

a) **Regeneration of Cation Exchanger.**

This shall consist of the following equipment.

I.	Acid Unloading Pumps	- 2 Nos. (1 Working + 1 Reserve)
II.	Bulk Acid Storage Tanks (for 30 to 33% acid)	- 2 Nos.
III.	Acid Measuring Tanks. (for 30 to 33% acid)	- 3 Nos.

Total capacity of Bulk Acid Storage Tanks shall be to meet one month's requirement of the DM Plant rounded to road tanker capacity. The Tenderer along with the tender shall submit calculations for acid consumption. The total capacity of acid measuring tanks for cation and mixed bed exchangers shall be for acid required for double regeneration. Acid Measuring tank of adequate capacity shall also be provided for neutralisation pit.

Bulk acid storage tanks and Acid measuring tanks shall be constructed of FRP. The tanks shall be provided with all accessories such as level indicator, level switch, vent with breather, fume absorber, drain connections, etc.

IV. Dosing System

i) Dosing system shall be ejector type. Pressurised water for the jet ejector for cation exchanger shall be taken from degassed water pump discharge header.
ii) Pressurised water for jet ejector for mixed bed shall be taken from DM Water regeneration pumps header
iii) Suitable sampling connections, flow transmitter and density transmitter shall be provided to determine the flow rate and strength of the acid injected into the exchanger.
iv) The dilution ratio of the ejector shall be properly selected such that the bed can be effectively regenerated employing water at the available pressure.

© 2022 MECON Limited All rights reserved

The ejectors and nozzles shall be suitably designed for acid service and the high velocity of liquid.

v) Acid dosing for neutralisation pit shall be through gravity from acid measuring tank.

b) **Regeneration of Anion Exchangers**

These units shall be designed for regeneration with sodium hydroxide and shall consist of the following equipment.

I.	Alkali Unloading Pumps	- 2 Nos. (1 Working + 1 Reserve)
II.	Alkali Storage Tanks (for 40% alkali)	- 2 Nos.
III.	Alkali Measuring Tanks. (for 30% acid)	- 3 Nos.

Total capacity of Bulk Alkali Storage Tanks shall be to meet one month's requirement of the DM Plant rounded to road tanker capacity. The Tenderer along with the tender shall submit calculations for alkali consumption. The total capacity of alkali measuring tanks for anion & Mixed bed exchangers shall be for alkali required for double regeneration. Alkali Measuring tank of adequate capacity shall also be provided for neutralisation pit.

Bulk alkali storage tanks and Alkali measuring tanks shall be constructed of FRP. The tanks shall be provided with all accessories such as level indicator, level switch, vent with breather, CO_2 absorber, drain connections, etc.

IV. **Dosing System**

- Dosing system shall be ejector type. Pressurised water for the jet ejectors for anion exchanger and mixed bed shall be taken from DM Water regeneration pumps header.
- Suitable sampling connections, flow transmitter and density transmitter shall be provided to determine the flow rate and strength of the alkali injected into the exchanger.
- The dilution ratio of the ejector shall be properly selected such that the bed can be effectively regenerated employing water at the available pressure. The ejectors and nozzles shall be suitably designed for acid service and the high velocity of liquid.
- Alkali dosing for neutralisation pit shall be through gravity from alkali measuring tank.

c) **Regeneration of Mixed Bed Exchanger.**

I. Backwash

The mixed bed resins shall be backwashed to segregate anion and cation resins.

© 2022 MECON Limited All rights reserved

II. Acid Regeneration.

Acid regeneration of cation resins in the mixed bed shall comprise of acid measuring tanks and ejector with all accessories.

Provision shall be made in the design to prevent diffusion of acid to the anion bed during acid regeneration by maintaining suitable downflow of water in the anion resin bed.

III. Alkali Regeneration.

Alkali regeneration of anion resins in the mixed bed shall comprise of alkali measuring tanks and ejector with all accessories.

Provisions shall also be made to prevent diffusion of alkali to the cation bed during alkali regeneration by maintaining suitable up-flow of water.

IV. Resin Remixing

After regeneration and rinsing of the resins in the mixed bed the two resin beds shall be mixed by blowing compressed air through the resin bed.

8.05 DEMINERALISED WATER STORAGE TANK

Two Nos. DM Water storage tanks each of 12 hrs holding capacity shall be provided. These shall be vertical, cylindrical, shell type atmospheric tanks with flat bottom. MSRL lining of 4.5 mm thickness shall be provided. Externally these shall be painted with 2 coats of epoxy primer and 3 coats of rubberised final paint. These tanks shall be complete with 2 nos 500 mm dia manholes, level measurement system, overflow, air vent, drain, sample connections, CO_2 absorber, staircase, platform, handrails etc. PP ball rings (floating) shall be provided in the DM Water Storage Tank

8.06 BLOWERS

Each blower shall be supplied with electrical motor starter, Vee belt drive, protection screen etc. The capacity of the air blowers shall be suitably selected so as to meet the air demand of the various vessels, degassers and neutralisation pit. Blowers shall be of oil free twin lobe/ centrifugal type and its material of construction shall be CI. All the blower motors shall have a minimum of 15% margin over the rated bhp.

8.07 PUMPS

These pumps shall be split case single end suction horizontal centrifugal type directly coupled to the electric motor through a flexible coupling and mounted on a common foundation and shall be complete with all accessories.

All dosing pumps shall be controlled volume metering gear pumps. Pumps, which are handling corrosive water, shall be stainless steel wetted parts. Chemicals not compatible

© 2022 MECON Limited All rights reserved

with SS shall be provided with PP wetted parts.

8.08 SAMPLING RACK

Sampling rack shall be provided in the laboratory room adjacent to MCC room to facilitate centralised collection of samples. Small diameter stainless steel pipelines shall be provided to convey water upto the sampling rack.

8.09 NEUTRALISATION PIT

The common neutralisation pit shall be of RCC construction lined with acid/ alkali proof lining suitable for holding regeneration effluents generated from two streams of DM Water Plant with 25% margin. This shall have two compartments. A minimum free board of 500 mm shall be provided. Baffles, isolation gates, and hand railing shall be provided. Wire mesh shall be provided along with hand railing to prevent small polyethylene bags, etc. from falling into the pit due to wind. 2 Nos. (1 W +1 R) effluent transfer pumps shall be provided. These pumps shall be of SS construction.

8.10 PIPING

One complete set of interconnecting piping shall be supplied. This shall cover all interconnections between equipment and pumps and general utility pipe work for services e.g. compressed air, water for regeneration system, drinking water, toilet facilities, panic showers etc.

All pipes required to make the unit self-sufficient shall be provided.

The design pressure and material specification shall be as per requirement and approval of Purchaser/ Consultant. The tenderer may, however, quote for alternative material against individual services assigning proper reasons that the alternative material is better suited for the particular service.

The non-rubber lined pipelines shall have butt-welded joints with flange for equipment connections, valves fittings etc. All rubber-lined pipes shall be provided for with minimum 3.0 mm thick hard rubber lining. All joints shall be flanged with lining brought over the flanged faces. Bolts and nuts shall be of stainless steel for rubber lined pipes. For pipelines having long straight runs, flanges shall be provided at regular intervals and also at bends to facilitate easy dismantling. Sectionalisation shall also be provided.

Piping for acid, alkali, corrosive water shall be MSRL. Proper pipe fittings of readymade type such as bends, reducers, tee, etc. shall be used.

All pipes before SAC shall be of MS ERW (Heavy) as per IS: 1239/ IS: 3589. For SAC & onwards, all pipelines shall be of MSRL.

Acid lines are also to be of MSRL with pipe outside coated with FRP lining. The supports exposed to acidic fumes shall be of MS with FRP coating.

© 2022 MECON Limited All rights reserved

8.11 VALVES

Gate valves shall be of rising spindle type. For non-rubber lined valves, the valves for shut off shall be gate type made of cast iron or gun metal and shall be of flanged ends for size above 40mm. Non return valves shall be of swing check type suitable for installation in both horizontal and vertical lines. For rubber-lined lines, the valves for shut off shall be diaphragm type suitably lined with rubber or Teflon. Valves shall have indicators for `ON' and `OFF' position.

Motor operated valve shall be integral type complete with electric motor, starter, necessary gear drive, position limit switches, torque switches and all accessories as required. The valves shall also have hand wheel for manual operation.

Frontal piping Valves for all vessels shall be pneumatically operated diaphragm or butterfly valves.

All valves shall be arranged in the front of the vessel and at a height suitable for easy manual operation. In case the height of any hand wheel/lever of a valve is more than 1200 mm above the floor, pedestal for operation shall be provided. However, the Tenderer shall provide the hand wheels within 1200 mm to avoid pedestals. Tenderer shall indicate the type of valves considered for various services. Butterfly valves shall be double eccentric / triple eccentric double flanged type only (wafer type upto DN 80).

Valves shall be designed, manufactured, tested and marked as per relevant Indian Standards/ reputed International Standards and design codes.

Valves shall be of pressure rating to suit the system requirements at the points of installation (min PN 16).

Each valve shall be supplied with a hand wheel for operation. For motor actuated valves, provision shall be made for manual operation in the event of power failure.

All gate and butterfly valves of nominal size DN 450 and above shall be electrically operated with motor actuators unless otherwise specified.

All the valves provided with hand wheel/lever shall be clearly marked with “OPEN” and “CLOSED” positions and an arrow to indicate the direction of opening/closing.

Gate, butterfly and non-return valves shall be provided with bypass arrangement as per applicable standards. Bypass arrangement may be integral with the valve or connected between pipes.

Unless otherwise specified, the dimensions and drilling of end flanges of flanged valves shall conform to ANSI B16.1, Class 150 cast steel flanges. Flanges shall be at right angles to the axis of the bore and concentric with the bore.

Valves shall be suitable for frequent operation as well as for operation after periods of prolonged idleness in either open or closed positions.

© 2022 MECON Limited All rights reserved

8.11.01 Cast Steel Gate Valves

Constructional features, materials of construction of various components and testing of Cast Steel gate valves shall conform to IS 14846: 2000 or equivalent reputed International Standards like BS, DIN, ANSI/AWWA, API and ISO.

Bodies of valves shall be double-flanged ends and shall be fitted with seat rings securely fixed in machined recesses.

Stem shall be of stainless steel and forged or machined from forged/rolled bar. No casting is permitted.

The valve shall be fitted with double-faced cast-iron wedge made in one piece and having two machined facing rings securely fixed into machined recesses in the wedge.

The wedge-to-stem connection shall be designed in a way that their connection shall be stronger than the weakest stem section in order to avoid detachment of the wedge from the stem while operating the valve.

The guides and lugs shall be provided to guide the wedge through its full travel. The guides and lugs shall be lined with brass or bronze and the liners shall be secured by countersunk screws or rivets of non-ferrous metals.

All valves shall be designed for minimum torque requirement. The diameter of the hand wheel shall not exceed 750 mm but shall be sufficient to enable operation of the valve under the maximum operating head by a single person with an effort on the rim of the hand wheel not exceeding 135 Newton-m.

Hand wheels shall be fixed to stem by a washer and a nut screwed on to the stem. The collar on the stem shall be integral with the stem by forging and shall not be welded on to it. Hand wheels shall be arranged to turn in a clockwise direction to close the valve.

Generally, the valves are to be operated with hand wheel. Gear operation shall be provided for gate valves of nominal size DN 250 and above unless otherwise specified. Gear arrangement shall be totally enclosed bevel gear having grease case with grease nipples/plugs and position indicator for open/ closed position. Gear operators shall be designed to operate effectively with the pressure across the closed valve equal to the cold non-shock pressure rating.

For details refer cl. No. 10.

8.11.02 Cast Steel Butterfly Valves

Constructional features, materials of construction of various components and testing of butterfly valves shall conform to IS13095: 1984 (1990) or reputed International Standards like BS EN 593: 1998 or ANSI/AWWA C504.

Butterfly valves to be installed on delivery lines of pumps and on headers shall be tight

© 2022 MECON Limited All rights reserved

shut-off valves and regulating valves respectively as per BS EN 593: 1998.

The shaft shall be of stainless steel to AISI 410 and shall consist of a one-piece unit extending completely through the valve disc.

Valve seats shall be designed to provide tight shut-off in both directions. Valve seats shall be of nitrile rubber and shall be of a design that permits removal and replacement at the site of installation.

Valves shall be fitted with sleeve type bearings contained in the hubs of the valve body.

Valves shall be equipped with thrust bearings which shall hold the valve disc securely in the centre of the valve seat. Sleeve and other bearings fitted into the valve body shall be of self-lubricated materials that do not have a harmful effect on water or rubber.

For details refer cl. No. 10.

8.11.03 Cast Steel Non-Return Valves

Dual plate check valve type shall be provided as non-return valve. For details refer chapter for Valves.

8.11.04 Globe, Needle, Ball and Diaphragm Valves

Globe valves shall conform to IS: 778, Class I or higher as per System requirement.

Needle valves shall be of 800 class minimum. Body, seat, spindle, Nut and hand wheel shall be SS-316.

Ball valves shall be of lever operated type and of 800 class. Body shall be SA 3S1 Gr CF8M. Ball, stem, gland and lever shall be AISI 316. Seat and seal shall be of RTFE. Valves shall conform to BS 5156.

Diaphragm valves shall be of (weir type) class 150. Body and bonnet shall be of CI (IS 210 FG 260). Stem shall be of SS-410. Stem bush shall be S.G. Iron. Diaphragm valves shall conform to BS: 5156

For details refer cl. No. 10.

8.11.05 Electric Actuators

Electric actuators of valves shall be integral type complete with electric motor, necessary gear drive, torque limit switches, position limit switches and terminal board.

Micro-switch shall be provided on the valves for disconnecting power supply which will operate when the valve is operated manually.

All motor operated valves shall have de-clutch able manual override along with the

© 2022 MECON Limited All rights reserved

position indicators. The motorised valve shall be designed in such a way that it is possible to remove the actuator from the valve without requiring shutdown.

All limit switches shall be dust and water proof. All motors shall be suitable for DOL starting.

Motors shall be capable to start and run-up with the driven mechanism/equipment connected at a minimum of 85% of the rated voltage at the terminals.

All motors shall be capable of operating satisfactorily at full load for 5 minutes without injurious heating with 75% of the rated voltage at its terminals.

Starting torque shall be less than 160% of the rated torque. Starting current shall be less than or equal to six times the rated current.

Four-pole motors shall be used for all general applications unless specific drive requirement calls for.

For details refer cl. No. 10.

8.12 QUALITY OF TREATED WATER

Sl. No.	Description	Parameters	Values
	DM WATER PLANT		
1.	After activated carbon filter	Turbidity	<2 ppm
2.	After Cation Exchanger	pH	3 -4
		Total Cations	Not greater than 1 ppm as $CaCO_3$
3.	After degasser	Free CO_2	< 5 ppm as CO_2
4.	After anion exchanger	pH	7.5 - 9.0
		TDS	< 2 mg/1
		Conductivity	< 10 micromho/cm at 20 deg C.
		SiO_2	< 0.2 ppm as SiO_2
5.	After mixed bed units	pH	6.8 to 7.2
		TDS	< 0.15 ppm as $CaCO_3$
		Conductivity	< 0.2 micromho/cm at 25^0C
		Silica as SiO_2	< 0.02 ppm
		Fe	< 0.01 ppm
		Hardness	Nil
		Turbidity	Nil

8.13 TESTS, TEST CERTIFICATES AND DOCUMENTS

For each of the items being manufactured, following test certificates and

© 2022 MECON Limited All rights reserved

documents, as applicable for each of the equipment, in requisite copies including original shall be submitted to Purchaser/MECON. All test certificates must be endorsed by the Manufacturer and Contractor with linkage to project, purchase order and acceptance criteria.

i. Raw materials identification & physical and chemical test certificates for all materials used in manufacture of the equipment (except IS 2062-2011 Gr. A & IS 210-1993, FG-150).
ii. Welding procedures and welder's qualification test certificates, as per applicable code.
iii. Details of stage wise inspection & rectification records for fabricated items, castings, forgings and machined articles.
iv. Control dimension chart with records of alignment, squareness etc.
v. Manufacturer's material and performance/ relevant test certificates for all bought-out items.
vi. Details of heat-treatment and stress relieving charts as per specification.
vii. Non-Destructive Test reports as per respective code.
viii. Static/dynamic balancing certificate for rotating components / machines.
ix. Hardness test certificate.
x. Pressure Test Certificates.
xi. Performance Test Certificates for all characteristics.
xii. Geometric accuracy and repeatability test reports of machine tools.
xiii. Routine/type/ calibration/ acceptance/ special test certificates for electrical items.
xiv. Diagnostic features of NC/CNC system and test certificates for electrical items.
xv. Surface preparation and painting certificates.
xvi. Certificates from competent authority for the items coming under statutory regulations.

8.14 LIST OF SPARES, TOOLS & TACKLES TO BE SUPPLIED FOR DM PLANT

8.14.01 LIST OF SPARES

In general, the spares shall include the following as applicable depending upon the equipment offered by the Contractor. The spares are intended to cover all wearable/damageable delicate items of the plant.

01 For all Centrifugal Pumps:

Impeller : 1 no. for each variety

Impeller shaft and keys : 1 no. for each variety

Bearings for pump : 1 set for each variety

Shaft sleeves : 1 no. for each variety

Casing & Impeller wearing rings : 1 set for each variety

© 2022 MECON Limited All rights reserved

Gland sealing arrangement : 1 set for each variety

(Mech. seal or rope packings)

Washers of all sizes/types used : 2 set for each variety

Pump and motor coupling : 1 no. for each variety

Coupling pads/bushes : 1 set for each variety

Impeller lock nuts : 2 nos. for each variety

Gasket : 1 set of each type

`O' ring : 1 set of each type

Impeller sealing ring : 2 nos. for each type

Pump motor bearings : 1 set of each type

02 For one complete set of blowers of various sizes used in the DM plant.

Impeller : 1 no. for each variety

Impeller shaft and keys : 1 no. for each variety

Bearings for blower & motor : 1 set for each variety

Complete set of belts : 1 set for each variety

(if belt driven)

Blower motor coupling : 1 no. for each variety

(if applicable)

8.14.02 LIST OF TOOLS AND TACKLES TO BE SUPPLIED

Sl. No.	Item	Qty.
1.	Pipe wrench suitable for pipe size	1 no upto 50 NB
2.	Slide wrenches, size 8", 12" & 14	1 no each
3.	Double ended spanner set M-6 to M-24	1 set size
4.	Ring spanner set M-6 to M-24 size	1 set
5.	Ratchet & sockets set for hexagonal and bolts size M-6 to M-24	1 set head screws
6.	Allen key sets size M-6 to M-24	1 set
7.	Flaring tools with dice	1 set

© 2022 MECON Limited All rights reserved

Sl. No.	Item	Qty.
8.	Grease gun	1 no
9.	Oil gun	2 nos.
10.	Screw driver (3 sizes)	2 nos. in each size
11.	Sprit level	1 no.
12.	Feeler gauge	2 sets
13.	Screw pitch gauge	1 set
14.	12" flat file	2 nos.
15.	12" square file	2 nos.
16.	12" round file	2 nos.
17.	Inside and outside calipers (3 sizes)	1 no in each size
18.	12" hand hacksaw	1 no.
19.	Hacksaw blade for above	3 dozen
20.	Rubber lining patch work kit	1 no.
21.	Cutting pliers	2 nos.
22.	Nose pliers	2 nos.
23.	Spark tester for checking rubber lining	1 no.
24.	Soldering lead with flex	1 kg.
25.	Steel scale (500mm & 1000mm long)	2 nos. in each size
26.	Hand lamps	2 nos.
27.	Taps M-6 to M-24 sizes	1 set
28.	Dies 1/2" to 14"	1 set
29.	Pliers	2 nos.
30.	Adjustable wrench 2" to 8" pump impeller	1 no..
31.	Tool box for above tools	2 nos.
32.	Dial gauge with clamps for alignment	2 sets
33.	Micrometer	1 no.
34.	Bearing pullers (3 jaw & 2 jaw)	2 each
35.	Circlip pliers (internal & external)	1 each

Tools and tackles shall be of Gedore/Taparia/Everest make. The items which are not manufactured by the above suppliers, equivalent makes shall be accepted based on credentials.

9.0 DESIGN CRITERIA FOR WATER BASED FIRE-FIGHTING SYSTEM

9.01 Dedicated firewater pump houses shall be provided with required nos. of electric motor

© 2022 MECON Limited All rights reserved

driven pump sets, diesel engine driven pump sets and jockey as per TAC norms. An independent fire fighting network in ring main covering all the buildings, internal roads and peripheral roads with all associated electric, instrumentation, piping, underslung cranes and hoisting facilities etc. shall be provided in line with the TAC - 2003. Also a wet riser ring main shall be provided which will cover the complete plant complex.

9.02 The fire fighting pumps and accessories will be housed in a separate fire fighting pump house.

9.03 Interval between two consecutive hydrants shall be as per requirement. Isolation gate valve shall be provided for each yard hydrants on the riser pipe and in case of internal hydrants isolation gate valve shall be provided for each riser main of the buildings.

9.04 Internal hydrant shall be provided on all the floors of the buildings, Junctions houses, office building, conveyor galleries, other process building etc.

9.05 A fire water covered storage reservoir of adequate capacity (Minimum 2 hr requirement or as specified) shall be provided.

9.06 Filling connection to fire water reservoir shall be provided from the proposed make-up water line for the plant complex.

9.07 The detail specification of Fire water pump, diesel engine and hydrants are specified below: -

9.08 FIRE WATER PUMP

i. The centrifugal pumps shall be suitable for discharging not less than 150% of the rated capacity at a head of not less than 65 % of the rated head. The Shut off head shall not exceed 120% of the rated head.

ii. Specification and details as specified for horizontal centrifugal pumps in this specification shall also be applicable for fire water pump.

iii. The Fire water Pump shall be as per IS: 12469.

9.09 FIRE HYDRANT

Landing valve/ yard hydrant shall be as per IS: 5290, Type-A.

The hose cabinet shall be fabricated out of fibre-reinforced plastic (thickness 2.5 mm) of size as mentioned in the table below. The top shall have pressed edge slightly projecting outside to prevent water (while cleaning etc.) from entering the cabinet. The cabinet shall be fitted with glass-fronted door. The door shall be provided with a knob and a lock with duplicated key on the body of the door with a glass cover. The glass of the key box shall be easily replicable. Suitable hooks, etc, shall be provided in the cabinet to hold the hose reels etc. mentioned above. Suitable wall mounting bracket shall be provided with the cabinet. Fully dimensioned general arrangement drawing indicating materials of construction, relevant specifications, etc shall be provided.

© 2022 MECON Limited All rights reserved

General specification of Hydrants to be provided is given below.

9.10 SPECIFICATION OF FIRE HYDRANTS AND ACCESSORIES

Sl. No.	IS no.	Description	Quantity
A.	**INTERNAL HYDRANT**		
1.	IS:5290 Type A (1993)	Fire hydrant (landing valves) single outlet oblique type of 75mm flanged inlet, 63mm outlet with hand wheel, Instantaneous bronze female coupling at outlet and blank cap. **(Stainless Steel)**	As per TAC requirement
2.	IS:6392 Table-18 (1971 R.A.1988)	MS matching flange DN80 (Slip-on type)with bolts, nuts & gaskets for the above hydrants	-do-
3.	Hose cabinet with glass front (for indoor installation) of size 750mm X 600mm X 250mm to house one number landing valve, 7.5m long hoses (2 Nos.) branch pipe, nozzle and spanner) consisting of the following:		
a	IS:636 Type-B (1988) & IS:903 (1984 R.A.-1990)	Reinforced rubberised fabric lined flexible hose of 7.5 m length having 63mm dia, each fitted (as per IS:1648:1961) with instantaneous male Coupling at one end and female Coupling at the other end.	-do-
b	IS:903 (1984 R.A.1990)	One branch pipe **(Stainless Steel)**	-do--
c)	-do-	One 25mm nozzle **(Stainless Steel)**	-do-
d)	-do-	One nozzle spanner **(Stainless Steel)**	-do-
B.	**YARD HYDRANT**		
1.	IS:5290 Type-B (1993)	Fire hydrant (landing valves) single outlet oblique type of 75mm flanged inlet, 63mm outlet with hand wheel, Instantaneous bronze female coupling at outlet and blank cap. **(Stainless Steel)**	-do-
2.	IS:6392 Table-18 (1971 R.A.1988)	MS matching flange DN 80 (Slip-on type)with bolts, nuts & gaskets for the above hydrants	-do-
3.	Hose cabinet with glass front (for indoor installation) of size 750mm X 750mm X 250mm to house one number landing valve, 15m long hoses (2 Nos.) branch pipe, nozzle and spanner) consisting of the following:		
a	IS:636 Type-B (1988) & IS:903	Reinforced rubberised fabric lined flexible canvas hose of 15m length having 63mm dia, each fitted (as per IS:1648-1961) with instantaneous male Coupling at one end and	-do-

© 2022 MECON Limited All rights reserved

Sl. No.	IS no.	Description	Quantity
		female Coupling at the other end including	
	(1984 R.A.-1990)	Intermediate coupling for joining 1x15m long hose.	
b	IS:903 (1984 R.A.1990)	One branch pipe **(Stainless Steel)**	-do-
c)	-do-	One 25mm nozzle **(Stainless Steel)**	-do-
d)	-do-	One nozzle spanner **(Stainless Steel)**	-do-

The details and specification of pumps, valves, pipes, fitting, pipe supports and associated civil, structural, electrical, instrumentation, material handling, air-conditioning & ventilation etc. as specified above and as mentioned in other clauses of this specification are applicable for this system also.

10.0 DESIGN CRITERIA FOR VALVES:

Flow control /isolating valves, drain valves, air release valves and Compensators, wherever necessary, shall be provided for the complete pipe network including cross-country pipeline.

Motor operated valve shall be integral type complete with electric motor, starter, necessary gear drive, position limit switches, torque switches and all accessories as required. The valves shall also have hand wheel for manual operation.

All valves shall be suitable for service conditions i.e. quality of fluid, flow temperature and pressure under which they are required to operate.

All valves shall be minimum PN 16. The valve size shall be same as the size of pipeline.

Valves shall be provided on pipe network for isolation of pipe section and equipment, control of pressure and flow, venting, draining etc. They shall be suitable located considering ease of operation and maintenance. Unless there is change in flow quantity in the pipeline, the valve size shall be same as the size of pipeline.

All valves shall be provided with hand wheel and position indictor. The face of each hand wheel shall be clearly marked with words “Open” and “Shut” with arrows adjacent to indicate the direction of rotation.

Valves shall be provided with suitable extension spindle and head stock assembly wherever required. In case gears or bevel system are used, these shall be of cast steel housing only.

SPECIFICATION FOR Butterfly valves: -

The butterfly valves shall be designed for bidirectional flow and shall be tested at works accordingly.

© 2022 MECON Limited All rights reserved

Sl No.	Description	Material
01	Body	Cast steel ASTM A216 GR WCB
02	Shaft	Stainless Steel AISI 410
03	Disc	SS, CF8M
04	Seat -Body / Disc for metal seated valve	Stainless Steel CF8M
05	Seat -Body / Disc for soft seated valve	Neoprene /EPDM
04	Bearing	BS 1400 LG2 Leaded Gun Metal Bronze
05	Pressure testing	BS 6755 Part I
06	Manufacturing Standard	BS 5155 / AWWA C-504/API 609/IS 13095
07	Face to Face Dimension	short body BS EN 558 Series 13
08	Flange Drilling standard	BS EN 1092 PN16
09	Test certificate service	For Physical/chemical analysis & metallurgical tests for body parts, Hydro testing
10	External Fasteners	A193 B7/A194 2H
11	End connections	Upto DN 150 - Wafer/lugged/flanged Above DN 150 – Lugged/Flanged

SPECIFICATION FOR Dual Plate Zip Check valve

1	Type	Dual Plate Zip Check Valve
2	Body	ASTM A 216 Grade WCB
3	Closure Plate	ASTM A 351 Gr. CF8 M (SS 316)
4	Stop Pin	AISI SS 410
5	Hinge pin	AISI SS 410
6	Spring	INCONNEL
7	Retainer	CF8M (SS 316)
8	Body Bearing	AISI SS 316
9	Plate Bearing	AISI SS 316
10	Spring Bearing	AISI SS 316
11	Design Standard	API 594
12	Dimensions	As per API 594

© 2022 MECON Limited All rights reserved

13	Testing	As per API 598
14	Special features required	i. Arrow indicating the flow direction. ii. Embossed name plate giving details of tag No. size, etc.
15	End Connections	Flanged

SPECIFICATION FOR LIFT CHECK VALVE (Size up To DN40)

1	Type	Lift Check Valve
2	Body	Forged Carbon Steel, ASTM A 105
3	Cover	Forged Carbon Steel, ASTM A 105
4	Seat ring	SS AISI 410
5	Disc	SS ASTM A 217, Gr CA15
6	Gasket between cover & Body	Spiral wound SS 304 filled with Graphite
7	Cover Bolt	Alloy Steel ASTM A 193 Gr B7
8	Spring	SS 316
9	Manufacturing Standard	API 602
10	Testing Standard	API 598
11	End connection	Screwed ends/Flanged end

SPECIFICATION FOR GATE VALVE

Sl No.	Description	Material
01	Type	Gate valve with rising spindle & bolted Bonnet.
02	Body /Bonnet	CS ASTM A216 Gr.WCB
03	Wedge	CS ASTM A216 Gr.WCB + 13% Cr.
04	Stem / Disc	AISI 410
05	Gland Bush	AISI 410
06	Gland flange	CS A216 Gr.WCB
07	Stud, Stud Nut, Eye Bolt nut	ASTM 193 Gr.B & 2H
08	Gland Packing	Graphoil
09	Hand wheel	Carbon steel / SGI

© 2022 MECON Limited All rights reserved

Sl No.	Description	Material
10	End Connection	Threaded/socket welded upto DN 40, DN 50 & above Flanged
11	Manufacturing Standard	API 600/BS 1414/IS14846
12	Pressure testing	API 598
13	Face to Face Dimension	API 600 / IS 14846

SPECIFICATION FOR GLOBE VALVE (CAST STEEL)

Sl No.	Description	Material
01	Type	Globe valve
02	Body/ Bonnet	CS A216 Gr. WCB
03	Disc	ASTM A351 CF8M
04	Stem	AISI 410
05	Body / Disc seat	AISI 410
06	Seating surface & rings	AISI 410
07	Hand wheel	ASTM A 216 Gr WCB
08	Gland, Gland plate, disc spindle nut	AISI 410
09	Gland Packing	25% Carbon filled PTFE rings
10.	Manufacturing standards	BS 1873/ API 600
11	End connection	Screwed upto 40 mm except otherwise mentioned. Flanged end for 50mm and above
12	Pressure Testing	As per BS 6755 Part I/API 598

SPECIFICATION FOR GLOBE VALVE (Gun Metal)

Sl. No.	Description	Material
1	Type	Globe valve for water supply pipelines
2	Body & Bonnet	GM to IS: 318-1981, (RA'91) Gr LTB – 2, C.I.
3	Wedge	GM to IS : 318-1981(RA'91) Gr LTB – 2, C.I.
4	Stem	Stainless steel
5	Back seat	GM to IS : 318-1981(RA'91) Gr LTB-2
6	Seating surface & rings	Malleable Cast Iron ASTM A-4 Gr - 32510
7	Hand wheel	Cast Iron to IS:210-1993 Gr. FG-200
8	Gland, Gland plate disc spindle nut	Non-ferrous alloy
9	Gland Packing	Asbestos IS:2712-1979
10	Pressure rating	PN = 1.6 N/mm2
11	Manufacturing standard	IS:778-1984 (RA 1990)/IS:781-1984
12	Max. operating temp	65 deg C

© 2022 MECON Limited All rights reserved

Sl. No.	Description	Material
13	End connection	Screwed upto 40 mm except otherwise mentioned. Flanged ends for 50 mm & above, IS:6392-1971 (RA-1988), table 17
14	Hydro static testing	Shell test = 24 kg/cm2 Seat test = 16 kg/cm2 Back seat test = 16 kg/cm2 Test Duration – 2 min
16	Special features required	i. Arrow indicating flow direction
		ii. Embossed name plate giving details of tag no., type & size

SPECIFICATION FOR CI / BRONZE PLUG VALVES

Sl. No.	Description	Material
1	Type	DN 65 and above: C.I. Two-way, lubricated type, tapered plug: Sizes up-to DN50: Bronze, T port 3-way lubricated type tapered plug
2	Body, Cover & Gland	CI as per IS:210-1993 FG 220 / Bronze as per IS:318 LTB-2
3	Plug	CI as per IS:210-1993 FG 220/ Bronze as per IS:318 LTB-2
4	Fasteners	Black Hexagonal bolt with nut as per IS:1364 Part 1 & 3,1992, class 4.6/4
5	Gland Packing	Non- Asbestos
6	Gaskets	Non- Asbestos
7	End connection	Screwed end up-to DN50, NPT/Flanged end for DN65 & above as per IS: 6392-1971 (RA'88) with matching flanges, table-17.
8	Pressure rating	PN = 1.6 N/mm^2
9	Manufacturing Standard	BS 5353/API 599
10	Hydro static testing	Body:24 kg/cm2 Seat:16 kg/cm2
11	Test certificates	Required for material/hydro test
12	Service	Cooling water for Blast furnace stove and stove valves
13	Max. operating temp	50 ^{0}C
14	Gear arrangement	Worm gear of C.S./forged steel
Note: 1. Type of threading for screwed end will be as per IS: 554 -1999. 2. Plug valve of size DN200 shall be provided with worm gear arrangement.		

© 2022 MECON Limited All rights reserved

SPECIFICATION FOR BALL VALVE / FULL BORE / 2 WAY / 3 WAY CAST STEEL

Sl No.	Description	Material
01	Type	Two piece (upto DN 50) / Three piece (above DN 50), Reduced bore, floating ball, PTFE seated
02	Body & Connector	Cast steel ASTM A216 GR WCB
03	Ball	SS , ASTM A 351, Gr. CF 8M
04	Seat	PTFE
05	Stem	AISI 316
06	Body Seal	PTFE
07	Gland & Stem Packing	35 % Carbon filled PTFE
08	End Connection	Screwed NPT/Socket end for less than 50mm, Flanged for 50mm & above. Socket weld connection with nipple of 100 mm (sch40 seamless pipe) welded on both sides.
09	Fasteners	HT, SS 304 only
10	Operation	Lever operated
11	Valve Design	BS 5353/API 599
12	Pressure testing	As per BS 6755 Part I
13	Pressure rating	PN = 1.6 N/mm^2
14	Face to Face Dimension	ANSI B 16.10
15	Flange dimension	ANSI B 16.5
16	Max. operating temp	100 Deg ^0C

SPECIFICATION FOR AIR RELEASE VALVE

1	Type	Air release valves as per IS: 14845-latest standard total tamper proof design.
2	Body, Cover and Cowl	CI FG 200 as per IS 210
3	Small orifice Air release Nipple	Bronze/ St. Steel (IS 318 GR LTB2/ SS 304)
3	Floats small and large	Timber core with vulcanite/ rubber coating/ SS 304 /ss316
4	Seat Ring	IS 318 GR LTB2
5	Pressure rating	PN 1.6 N/mm2
6	Test pressure	As per IS 14845

SPECIFICATION FOR BALL FLOAT VALVE

1	Type	Single - beat type with balancing piston
2	Body/Cover/Gland/Piston	Cast iron Gr 200 as per IS 210-1993
3	Seat ring/valve guide	IS 318 Gr 2

© 2022 MECON Limited All rights reserved

4	Pilot valve seat/face cap/spindle	IS 318 Gr 2
5	Links	M.S. cadmium plated
6	Face ring/piston cups	Leather
7	Lever	M.S.
8	Float	Tinned copper
9	Pressure rating	PN = 1 N/mm^2
10	End connections	Flanged end, IS: 6392-1971(RA'88) 50 mm and above. Screwed end upto 40 mm. Threading as per IS: 554/BSP Thread.
11	Hydrostatic testing	Body - 15 Kg/cm^2

SPECIFICATION FOR KNIFE EDGE GATE VALVES (Class 150)

Sl No.	Description	MOC/ Specification
1.	Design Standard	MSS SP 81
2.	Type	Bi-directional with rising spindle
3.	Body	ASTM A 351, Gr. CF8M
4.	Gate	ASTM A 240 Type 316
5.	Seat Ring	POLYURETHANE
6.	Packing Gland	BRAIDED PTFE
7.	Yoke	ASTM A 216 Gr. WCB
8.	Stem	ASTM A 276 Type 316
9.	Gasket	Non Asbestos
10.	Companion flange	SORF, ASTM A105 / ASME B16.5
11.	Position indicator	Aluminium
12.	Valves mounting fasteners bolts / nuts	A193/A194 Gr. B7/2H- CS

SPECIFICATION FOR COMPANION FLANGES

1	Type	Raised face plate flanges, Slip-on, welded, plate fabricated, machined finish.
2	Dimensional Standard	As per IS-6392-1971(RA'88), as per valve rating, Table-17/11, drilled off centre, RF. / As per BS EN 1092 PN 16/ ANSI B 16.5 / AWWA C 207 CLASS D
3	Material	C.S as per IS-2062 -1992 GR. 250A.
	Note: Valve flanges and matching flanges shall be drilled as per IS: 6392-1971 (RA'1988), table 17 for PN 1.6.	

Nominal size of the valve, make, pressure rating shall be cast on the body of the valve.

11.0 DESIGN CRITERIA FOR FILTER

© 2022 MECON Limited All rights reserved

11.01 ONLINE AUTOMATIC BACKWASH FILTER - EQUIPMENT SPECIFICATION

11.01.01 Mechanism

The online filter shall be of cylindrical body with wedge wire element housed in it. For automatic filter, area will be in the ratio of 1:4. The filter should start the self-cleaning process when the pressure differential across the screen reaches a preset value or predetermined lapse of time. Cleaning of the filter elements is to be carried out by the suction scanner with its spiral rotational movement. Cleaning of the filters shall be automatic and the filtering process shall not get hampered during back wash.

The filter control shall be carried out by purchaser's PLC and MCC system. However, functional description / Control write-up, PLC Input / Output list to the purchaser shall be furnished.

Flush drain valve and vent shall be provided for each unit of the main filter. The design of the filter shall be suitable for easy maintenance and replacement of the parts and inspection.

Each strainer shall be provided with basket opening area (six times of pipe cross section area or bigger) to ensure high flow volumes at low pressure and a long service life.

Provision shall be made for collection of drainage water from the strainers and shall be suitably connected to the plant area drainage system.

Valves to be supplied as part of the filters shall conform to the following standards. Pressure rating of all valves shall be 16kg/cm2.

11.01.02 Valve Actuator

All motors shall be suitable for 415V, 3-Phase power supply. Actuators shall be provided with travel Limit switches and Torque switches. These switches shall have IP-55 degree of protection. It shall have 2 NO + 2 NC contacts rated for 10 amps AC

a) Electrically operated built-in change over valves shall be complete with electric motors, necessary gear drive, position limit switches, torque switches and terminal box.

b) Motor shall be squirrel cage induction motor with DOL starter at 415+/- 10% 50Hz +/- 5% having the following: -

   i. Class `F' insulation, temperature rise limited to Class `B'.
   ii. TEFC enclosure with degree of protection IP55.

c) Arrangement shall be provided on the valve for disconnecting power supply, which shall operate when valve is opened manually.

d) All end position limit switches and torque switches for open & close position shall

© 2022 MECON Limited All rights reserved

be dust and waterproof.

e) All the limit switch contacts shall be wired in a terminal box (part of actuator) suitable for termination of 14 x 1.5 mm^2 control cable.

11.01.03 The filter shall be designed for following parameters:

- Normal and maximum flow rate
- Minimum Inlet Pressure
- Filtration Degree absolute
- Inlet TSS in mg/l or ppm
- Minimum water used for draining / flushing
- Cleaning Mechanism
- Mechanical Life of screens and housing

Normal and Maximum Flow rate: The maximum flow rate the filter should be able to handle shall be minimum 120% of the normal flow rate.

Minimum Inlet Pressure: The minimum inlet pressure provided for the filter shall be in the range of 1.5 to 2.0 bars. No back wash pumps shall be used for cleaning purpose

Inlet TSS in mg / or ppm: Based on the inlet TSS load the filter selection shall be done accordingly with minimum flushing cycles.

Minimum water for flushing: The water used for flushing shall not exceed 1 to 2% of the rated flow and the filter shall always deliver at the outlet of 98% of the rated flow. No standby filters are envisaged for this application.

Mechanical life of screens / filter housing: The screens shall be in SS316L material for surface water (rivers, lakes etc) and for sea water the screens shall be of 6MO (254) material grade. Housings shall be in high grade carbon steel with suitable sandblasting and epoxy coating with polyester coating.

The control panel shall be provided with the following control and monitoring.

Common Selector switch to operate the system in following mode.
PDS mode.
PDS & Timer Mode
Continuous Flushing Mode

The filters shall be having arrangement to do manual flushing with the help of test button on the front of the control panel as well by simulation locally on the filter by closing the small ball valve for 5 sec and re opening it, thus creating an artificial backflush cycle.

SURFACE PREPARATION AND PAINTING

Blasting with steel balls on the surface to achieve as SA 2.5 quality according to the

© 2022 MECON Limited All rights reserved

requirements of the Swedish standard organisation (SIS)

Phosphatization according to the American Federal specification procedure TT-C-490D-Type 1, also included degreasing by immersion of the product in tank containing various chemical solution.

11.02 SIMPLEX / DUPLEX STRAINER - EQUIPMENT SPECIFICATION

Simplex / Duplex basket filters shall be installed on water pipelines to arrest suspended in supply water.

- Strainers/Duplex basket filters shall be of cylindrical MS construction.
- Strainers/Duplex arrangement with built-in valves shall be such that one element will always remain in operation ensuring continuous uninterrupted supply of filtered water from each strainer. It should not be possible to isolate both the strainers simultaneously due to even inadvertent rotation of hand wheels for movement of valve disc during change over from one basket to another. The changeover valves shall have manual drive.
- Basket Filter bodies and internals shall be designed to withstand design pressure with normal surges.
- Pressure equalizing connections for both the chambers shall be provided for smooth changeover.
- Two nos. dial type pressure gauges of size 150 mm dia shall be provided suitably mounted at the inlet and outlet mains of each strainer.
- Differential pressure switch with alarm contacts shall be provided for each unit of the main strainer across inlet and outlet for operation at a differential pressure adjustable within 0-1 kg/cm^2.
- Flush drain valve and vent shall be provided for each unit of the main strainer. The design of the strainer shall be suitable for easy maintenance and replacement of the parts and inspection.
- Each strainer shall be provided with basket opening area (six times of pipe cross section area or bigger) to ensure high flow volumes at low pressure and a long service life.
- Flush drain valve and vent shall be provided for each unit of the main filter. The design of the filter shall be suitable for easy maintenance and replacement of the parts and inspection.
- Provision shall be made for collection of drainage water from the strainers and shall be suitably connected to the plant area drainage system.

© 2022 MECON Limited All rights reserved

- Along with the offer the Tenderer shall furnish details of the basket filter such as make, general arrangement and cross sectional drawings, operating parameters, materials of construction of various components supported by manufacturer's literature and catalogues.

- Valves to be supplied with Pressure rating of all valves shall be 16kg/cm^2.

11.03 Y – STRAINERS - EQUIPMENT SPECIFICATION

Y – Strainers of suitable sizes shall be installed at water pipelines to arrest suspended particles are in the scope of the contractor.

- The body of the Strainer will be MS fabricated.
- Element will be SS 304
- Screwed for 50 NB and below
- Flanged for 65 NB and above
- Mesh size will be 1 mm
- Test pressure will be 15kg/cm^2.

11.04 SHOP TESTING

Testing and inspection of equipment and materials shall be carried out at the works of the Contractor or his sub-Contractor during manufacturing and on final product to ensure conformity of the same with acceptable criteria of Technical Specifications, approved drawings, authenticated manufacturing drawings and reference Indian/International standards.

Tests to be conducted at the shop for various assemblies/sub-assemblies of equipment shall include, but not be limited to the following:

- Material test.
- Tests during manufacture/fabrication.
- Dimensional checking.
- Hydraulic test at the shop.
- Performance test.

- Any other test as required

12.0 <u>DESIGN CRITERIA FOR STAINLESS STEEL FLEXIBLE HOSES:</u>

EQUIPMENT SPECIFICATION

1.	Type of Hose	Single Stainless-Steel wire braided corrugated flexible hose assembly SS

© 2022 MECON Limited All rights reserved

		AISI 304, fitted with SS female swivel fittings at both ends (Nut nipple) suitable for connecting pipes. As per BS: 6501 Part-I with type B flexibility. Alternatively cam lock connection can also be offered
2.	Size	As per requirement
3.	Suitable for pipe internal diameter	As per requirement
4.	Test pressure	1.5 times of operating pressure
5.	Operating pressure	As per System requirement
6.	Frequency of bend	Single
7.	Design temperature	Normal : 40 to 50 ^{0} C Maximum : 110^0 C
8.	End connection	Female swivel end on both sides (Nut nipple) suitable for connecting pipes having flanges

Hose specification (for Blast Furnace): These hoses will be used in all interconnections in stack zone area and other areas.

i. flame resistant cover,
ii. SS wire mesh, wire thickness 0.3 mm,
iii. rubber coating,
iv. glass/ ceramic fibre,
v. Heat resistant (upto 230 deg C) rubber core.

13.0 DESIGN CRITERIA FOR RUBBER EXPANSION JOINTS:

13.01 EQUIPMENT SPECIFICATION

Material specification:

Rubber Expansion Joints shall be made of high-grade abrasive resistant natural rubber compound reinforced with adequate numbers of piles of heavy cotton duck, rayon cord, impregnated within rubber compound and further reinforced with square metal ring embedded in it. The outer exposed surface of rubber expansion joints shall be given a coating of synthetic/neoprene rubber and further painted with chlorinated rubber-based paint. Rubber expansion joints will be suitable for design temperature of 50 ^{0}C and for handling clear water. Rubber expansion joints shall absorb vibration, shock and axial compression of 10 mm, axial elongation of 10 mm and lateral movement of 10 mm.

Control unit:

One set of control unit (stretcher bolt assembly) consisting of 2/3 nos. limit/tie rod (material IS: 3657 Gr. 6.6), Stretcher Bolt, Triangular Plate (material IS:226), Nuts

© 2022 MECON Limited All rights reserved

(material IS:1363 Gr. 6.O) Steel Washer and Rubber Washer of durometer hardness of 100deg Centigrade +/- 5 deg Centigrade.

The control unit shall be made suitable to make RE joint and no. of limit/tie rod matched against each.

13.02 TECHNICAL PARAMETERS OF RUBBER EXPANSION JOINT

1.	Test pressure	18 kg/cm2 or as per relevant standards
	Max. Pressure (operating)	12 kg/cm2
	Design pressure	16 kg/cm2
	Burst pressure (Guaranteed	4 times design pressure
	Leak test	18 bar(g), joint shall be kept immersed in water bath to check leak tightness
2.	Length	As per relevant standard
3.	Tie rod	2 tie rods up to DN65 3 tie rods from DN 80 to DN300 4 tie rods above DN350 and above
4.	Material of construction	
	Body	Natural rubber compound
	Cover	Neoprene rubber
	Tie rod	Carbon steel
5.	Design temperature	Normal 40 Deg Centigrade Max 80 Deg. Centigrade (Worst Case)
6.	End connection	Carbon steel forged loose flanges at both ends, with dimensions as per IS: 6392

14.0 DESIGN CRITERIA FOR SLUICE GATES

14.01 EQUIPMENT SPECIFICATION

SS Sluice gates shall be supplied as per IS: 13349/AWWA C 561. Gearbox arrangement shall be of open type for small size and closed type for sizes above 400 mm size.

Sluice gates are used as a means of flow isolation in channels and on ends of pipes entering wet walls. Sluice gates are used against a wall between two basins or between a pipe and an open channel.

Sluice gates have been usually located when the influent channel enters the wet well and can be operated to isolate the section of the wet wall for subsequent dewatering and maintenance/repairs.

Thimble mounted sluice gates to be provided for size DN 750 and above (MOC shall be as per table given in this chapter).

Sluice gates shall be of rising spindle type. Sluice gates shall be selected in such a way that the velocity through gates shall be in the range of 0.5-0.75 m/s.

© 2022 MECON Limited All rights reserved

All assembly bolts/studs, nuts, anchor, bolts and washers are acceptable in stainless steel construction to AISI: 304/ AISI: 410.
Sealing of single face is acceptable. Accordingly, leakage test shall be performed to ensure committed leakage for seating head only applied for unseating side.

Item Nos. of all the gates shall be punched on the gate (at an easily identifiable place) before dispatch.

Design and constructional requirements

A wrought stainless steel side guide strip having a machined taper face on the underside shall be fixed to the frame on each side by SS studs and extending over the height of the waterway to provide effective guide throughout the travel of the door.

A stopper shall be cast integral immediately below the waterway and central with it to limit the travel of the door and to avoid the chances of overstraining of wedge brackets. The stoppers shall be provided in such a manner that they do not foul with the seat facings on the door.

Guides shall be adequately secured to the main frame by stud bolts and provision shall be made for appropriate longitudinal movement to adjust degree of wedging consistent with sealing properly. There shall be little lateral movement and tongues, keys, shoulders or lugs may be provided for the purpose.

The locations of anchor bolts for the gate frames shall be as per the applicable standard. The diameter of anchor bolts shall not be less than 15 mm. The diameter of anchor bolts for larger gates shall be 20 mm minimum.

The lifting mechanism shall consist of a pillar mounted manually operated geared or un-geared headstock. The pillar shall be provided with a suitable opening with detachable cover to facilitate easy cleaning and greasing of spindle threads.

The height of headstock shall be sufficient to enable an individual to operate the gate comfortably without bending from the waist. For smaller gates, the height of hand wheel from the base of headstock shall not be less than 600 mm. For larger size gates, the height of hand wheel from the base of headstock shall not be less than 750 mm.

The diameter of hand wheel shall not exceed 750 mm but shall be sufficient to enable operation of gate under the maximum operating head by a single person with an effort on the rim of hand wheel, not exceeding 136 Newton-m while crack opening the gate and not exceeding 68 Newton-m during normal opening after the gate is crack opened. The face of the hand wheel shall be clearly marked with the words "OPEN" and "CLOSE" with an arrow to indicate the direction of opening.

The headstock shall be provided with a suitable locking arrangement and gate position indicator.

© 2022 MECON Limited All rights reserved

The lifting rod shall be provided with square threading, length of threaded portion being approximately 250 mm more than the height of gate opening.

The lifting rod shall also be provided with a safety stop nut at the top to prevent the chances of over closing of gate.

The lifting rod shall be provided with sufficient number of rod guide brackets to limit the unsupported length of rod.

There shall be a provision on the gate for preventing free movement of shutter in the frame during transit, storing and handling. This provision shall be painted with red paint so that it can be easily noticed and removed immediately after erecting the gate assembly before an attempt is made to open the gate.

14.02 DATA FOR DESIGN OF SLUICE GATES

i.	Type of Mounting	Wall mounted type with head stock. Headstock shall have geared handle for operation.
ii.	Spindle type	Rising Spindle

14.03 MATERIAL OF CONSTRUCTION

Sl No.	Description	MOC/ Specification
1.	Design and testing Standard	AWWA C561
2.	Type of Mounting	Wall Mounted / Bi-directional with rising spindle
3.	Transit Stops	UHMWPE
4.	Shutter Side Guide	UHMWPE
5.	Gate Frame	SS ASTM A240 Type 316
6.	Shutter	-do-
7.	Side Seal Retainer	-do-
8.	Bottom Seal retainer Flat	-do-
9.	Top Seal Retainer	-do-
10.	Top Wedge	-do-
11.	Fasteners	SS, AISI 304/410
12.	Anchor bolts	SS, AISI 304/410
13.	Bottom Rubber seal	Neoprene ASTM D2000
14.	Side Rubber Seal	UHMWPE (backed with Neoprene ASTM D2000)
15.	Top Rubber Seal	-do-
16.	Hinge Pin & Stem	SS ASTM A276 Type 316
17.	Thrust Nut	Bronze ASTM B865 (CA863) / SS ASTM A276 Type 316
18.	Headstock Pillar	CI IS210 Gr 260
19.	Stem cover with indicating scale	Transparent Polycarbonate tube

© 2022 MECON Limited All rights reserved

Sl No.	Description	MOC/ Specification
20.	Crank Handle	CI IS 210 FG260
21.	Pillar Mounted Bevel Gear Headstock (PBGH-2000)	CI IS210 Gr 260
22.	Stop Nut	CS IS 210 FG260
23.	Stem Coupling	SS ASTM A 276 type 316
24.	Operating Nut / Stem Nut	Leaded Tin Bronze IS318 LTB-2

Note:
Permissible leakage rate will be 1.24 litre / minute / meter of seating perimeter as per AWWA C561 standard.

15 DESIGN CRITERIA FOR RAW WATER & DRINKING WATER TREATMENT PLANT

The Raw Water Treatment Plant is to be provided to meet the makeup water requirements of various circulation systems and drinking water needs.

To install a water treatment plant comprising pre-treatment units for settling and clarification and filtration for the influent raw water with a view to obtaining an acceptable quality of make-up water & drinking water. The raw water treatment plant can be designed with conventional treatment system or through Lamella clarifier.

15.01 RAW WATER TREATMENT SYSTEM

Raw water from raw water pump house shall be passed through cascade aerators. From cascade aerators raw shall pass through a separate stilling chamber. Raw water from each stilling chamber shall pass through parshall flumes. From each parshall flume raw water shall be passed through flash mixer, Flocculator and settler (Plate clarifier/ tubes settler) with pre-chlorination, dosing of Alum, lime and polyelectrolyte dosing. For polyelectrolyte dosing, selection of polyelectrolyte shall be compatible for ultimate end use of the treated water for drinking water consumption. After clarification, overflow water shall flow to the clarified water sump near the Make-up water pump house. All water retaining / storing RCC structures will be painted with food grade epoxy paint from inside.

The underflow of the clarifiers and the waste wash water from the pressure filter shall be collected in a sludge sump situated near the clariflocculator and shall be pumped to the dewatering system. Suitable agitation shall be provided in the sludge sumps to avoid settling of the sludge. Storage of chemicals and their dosing facilities shall be provided inside the chemical house located besides the clariflocculator.

Provision of slurry storage tanks & slurry transfer system along with piping to be ensured. The capacity of the slurry storage tank shall be adequate for storage of the waste wash water generated from the backwash in conjunction with the underflow sludge discharged from the clarifier during the said period. Two nos. of slurry storage tank for each clariflocculator shall be provided of suitable capacity and suitable Nos. of slurry transfer pumps will be installed for transporting the slurry to the dewatering system.

© 2022 MECON Limited All rights reserved

Sludge recirculation System from underflow of clarifiers shall be provided. The recirculation System shall be complete with necessary valves, fitting, etc. as required along with sludge recirculation pumps (1W+2R), for each clarifier.

15.02 MAKE-UP WATER SYSTEM

Clarified water from the clariflocculator flows to the clarified water sump. The clarified water storage tank shall be provided with a storage capacity 1 hour. Clarified water pumps, will feed the clarified water to a pressure filter (horizontal filtering mass type) with sand/dual media for filtration of the clarified water. Filtered water will be received into the makeup water storage tank from where major part of the water will be pumped to the make-up water network of the proposed Plant and another part will be used for back-washing purpose of the pressure filter. The make-up water storage tank shall be provided with a capacity of 2 hour.

Two nos. make-up water Pumps (1W +1S) shall be provided for pumping the filtered water into the make-up piping network or to the overhead tank as per the requirement.

15.03 DRINKING WATER SYSTEM

Part of the filtered water will be chlorinated through an online chlorinator and pumped and supplied throughout the plant for drinking purposes. Two nos. drinking water Pumps (1W +1S) shall be provided for pumping the potable water to the drinking water circuit.

15.04 DESIGN PARAMETERS

The design of the treatment plant shall be based on the following considerations:

The maximum TSS after clariflocculator shall not exceed 50 ppm and maximum TSS in the treated make-up water (after pressure filter / gravity sand filter / valve less gravity filter) shall not exceed 5 ppm and the pH of treated make-up water shall be in the range of 7.5 to 8.2. With a view to demonstrate the aforesaid guaranteed performance values, equipment to be selected judiciously and to carry out the process design calculations based on optimum chemical dosing rates for each of the aforesaid conditions and include the most appropriate process scheme.

15.05 DESIGN

The complete system shall be designed following good engineering practices and standards. The detailed scope of design shall include:

i. Development of the pumping and treatment scheme.
ii. Finalisation of equipment layout of the complete treatment plant
iii. Design and routing of pipes, cables, ventilation ducts etc. upto the design limit.
iv. Design of Raw water pump house, Clariflocculators, flash - mixer, sludge pumping system, chemical house.
v. Design of complete electrics, Power distribution, instrumentation, automation,

© 2022 MECON Limited All rights reserved

ventilation and material handling facilities.

vi. Civil drawing/Assignment drawing for makeup cum fire cum drinking water PH, Backwash OH tank for preparation of civil drawing by purchaser.

Treatment plant shall be designed as per "Manual on Water Supply and Treatment" of CPHEEO (Central Public Health and Environmental Engineering Organisation)

The Make-up Water Treatment Plant shall be designed for the required output. The treatment plant shall generally consist of the following technological units/equipment/sub-systems:

Sl. No.	DESCRIPTION
001	Raw water inlet pipe line
002	Cascade Aerator
003	Stilling Chamber
004	Flash Mixer
005	Clariflocculators/
006	Chemical storage cum preparation / Dosing area
007	Pressure sand filter / Rapid sand gravity filter / valve less gravity filter complete with piping and control valves, water distributor, under drain collection system, air vents, drain cocks, manholes, sampling points, instruments etc. with initial charge of filtering mass.
008	Filter Air Blower
009	Slurry storage tank agitator mechanisms complete with shaft, paddles, motor, gearbox, base plate, platforms, walkways,
010	handrail etc.
011	Slurry storage tank fittings viz vertical baffles and wear plates.
012	Sludge pump sets (1W+2R) and pumping system
013	Raw water pump house
014	Raw water sump
015	Pump sets
	Raw water pump sets
	Clarified water pump sets
	Make-up water pump sets
	Drinking water pump sets
016	Backwash overhead tank of 15m staging height
017	Electro Chlorination Plant
018	Alum solution preparation-cum-dosing tanks of MSRL construction with SS-316 dissolving baskets.
019	Polyelectrolyte dosing pumps of suitable capacity, electromechanical type with SS-316 wetted parts
020	Lime preparation-cum-dosing tanks with dissolving baskets.
021	Lime dosing pumps, of suitable capacity, and electro-mechanical type.
022	Polyelectrolyte solution preparation-cum-dosing tanks of MSRL construction.
023	Polyelectrolyte dosing pumps of suitable capacity, electromechanical type

© 2022 MECON Limited All rights reserved

Sl. No.	DESCRIPTION
	with SS-316 wetted parts.
024	Polymer tank agitator with SS wetted parts complete with drive motor & accessories
025	Lime tank agitators complete with drive motor & accessories.
026	Polyelectrolyte tank agitator with SS wetted parts complete with drive motor & accessories.
027	Gate valves, non-return valves, plug valves and needle valves.
028	Clarified water, filtered/make up water, back wash water, waste wash water piping
029	Chemical dosing piping
030	Underflow slurry piping
031	Instrumentation as per T.S.
032	Electrics as per T.S.
033	Structural work as per T.S.

Broad specifications for the major equipment/sub-systems of the proposed Make-up Water Treatment Plant are outlined below:

15.05.01 PRE-TREATMENT

CASCADE AERATOR

In Cascade Aerator water is allowed to flow downwards after spreading over inclined surface in thin sheets and the turbulence is secured by allowing the water to pass through a series of steps or baffles. The number of steps shall be 4 to 6. Exposure time can be increased by increasing the no. of steps and the area to volume ratio improved by adding baffles to produce turbulence. Head requirements shall be in the range of 0.5 to 3.0m and the space requirement shall be in the range of 0.015 - 0.045 $m^2/m^3/h$. Necessary treatment and cleaning of Cascade Aerator to be provided for removal corrosion and slime deposition.

STILLING CHAMBER & FLASH MIXERS AND FLOCCULATION TANK

Stilling chambers, (two for each clariflocculator) shall be designed to provide adequate retention time for optimal functioning of the system.

Flash mixer shall be designed to provide adequate mixing time with the coagulant with retention time of 60 sec. Flocculation tank of RCC construction is designed for a retention time of 15 minutes and provided for slow mixing of influent water with PE Solution.

As such suitable piping arrangement on inlet side and outlet side of flash mixers is to be provided along with necessary isolation valves. Pipes leading to Clariflocculators, structural ladders, platforms, hand-railings, etc. shall also be provided. Coagulant preparation and dosing system shall also be provided. The outflow Pipes shall be

© 2022 MECON Limited All rights reserved

adequately supported.

One portable pH meter shall be provided to measure the pH of water before and after flash mixer.

15.05.02 a) Inclined Plate settler

Inclined plate settlers shall be provided with in-built scrapper mechanism inside the lamella. Each inclined plate settler shall be able to produce the required treated water capacity during normal operation. The plate to shall be designed to ensure the following:

Water moves in the upward direction while the sludge flows in a downwards direction.

The influent water is distributed evenly amongst all the plates causing laminar flow conditions to occur in the settler.

Maximum plate area is utilised for the clarification purposes.

The plates can be removed and cleaned during operation.

The gap between the two plates remains the same throughout the length and width of the plate.

The plates, overflow channels etc. do not bend or deform during operation.

The orifices, through which the clarified water flows to the overflow channel, are suitably sized and spaced for providing equal loading of solids amongst various plates.

The clarified water flows to the clarified water sump through gravity.

The sludge collects in the sludge chamber provided at the bottom of the settler most effectively and do not re suspend in the influent water.

The plates, overflow channel etc. shall be light in weight, strong, rigid and easy to maintain as well as of non-corroding material.

Each plate shall be minimum 4.2 mm thick and 1200 mm wide. The gap between the two plates shall be suitably selected to provide optimum operation of the unit. However, the minimum gap between the two plates shall not be lower than 50 mm. The angle of inclination of plates shall be around 55 deg. under normal operation.

The rise rate for the settlers, shall be in the range of 1.25 to 1.5 m/s.

A hopper shaped sludge chamber shall be provided with each settler. The sludge chamber shall be of sufficient storage capacity to allow periodic draining of sludge to the sludge pit.

© 2022 MECON Limited All rights reserved

Suitable baffle arrangement shall be provided to ensure effective separation of the influent water and the settling sludge.

A telescopic pipe arrangement shall be provided so that the level of sludge in the sludge chamber can be assessed.

To protect the plates, overflow channels etc. from an accidental impact load and direct sun light, the plate settler shall be provided with suitable covers.

Suitable measures for proper cleaning, flushing of the settler and its various components shall be provided.

Suitable platforms, handrails, approach staircases, ladders etc. shall be provided on top of the settler.

b) **RCC Clariflocculators (may be provided if accepted in contract)**

- Clariflocculator complete with all mechanical and electrical accessories shall be designed in such a way that each can handle required quantity of raw water.
- The clariflocculator shall also contain overflow weir, peripheral launder for collection of clarified water, sludge raking arms with MS scrappers and squeezes attached to the bladder, sludge drainage pipeline with telescopic arrangement, sludge chamber alongwith necessary instrumentation and protection system
- Walkways with handrails shall be provided along the periphery of the Clariflocculators and on the moving bridge assembly.
- Suitable measures for proper cleaning, flushing of the clariflocculator and its various components shall be provided
- Suitable platforms, handrails, approach staircases/ ladders etc. shall be provided for the clarifier

c) Ultra High-Rate Clarifier (UHRC)

UHRC for the pre-treatment section in place of Clariflocculators / High-Rate Solids contact clarifier (HRSCC) can also be provided. The broad specification are as follows:

- The clarifier should be modular in construction and expansion of capacity should be possible by adding modules
- The clarifier should be modular in construction and expansion of capacity should be possible by adding modules
- The clarifier should be capable of operating successfully with the rise rate of 2.5 to 4.0 $m^3/m^2/hr$ and adequate surface area for surface loading.
- The clarifier should have inbuilt mechanism for flash mixing flocculation and clarification within the unit
- The clarifier should have inbuilt provision for sludge recirculation with a variable speed drive
- The clarification zone should use inclined plate for maximizing clarification areas. The central drive assembly should be mounted on a fix bridge
- The clarifier should not use ballast for operation

© 2022 MECON Limited All rights reserved

15.05.03 Filter House: Pressure filters / Auto Valve less Gravity filter, Activated carbon filters and accessories shall be installed in a covered structural building or in open space based on requirement and shall be constructed based on general arrangement drawings, foundation details and load data.

Pressure Filters: Refer specification of pressure filter mentioned under chapter 07.

Auto Valve less Gravity Filter

The filters and the connected equipment shall be designed, manufactured and tested as per CPHO manual or as per other international standards acceptable to the Purchaser and shall be suitable for the duty conditions and capacities as indicated. In addition following shall be followed.

The surface loading shall be 6 to 8 $m^3/hr/m^2$.

The design, fabrication, inspection and testing of the pressure filter shall conform to IS: 2825- 1969 (RA 1984).

At least 60% of free board shall be left over the filtering media. Media traps shall be provided at the outlet of each filter.

Back wash cycle for each filter shall be once in every 24 hrs with 20 hrs service cycle.

Suspended solids content in the filtered water shall not exceed 5 ppm.

The piping system and control valves shall be provided in front of the vessel for smooth operation. The same shall include contaminated water inlet, filtered water outlet, back wash inlet, waste water outlet, drain, air scouring and air vent.

Filters shall be provided with access manholes for filling and charging of gravel, sand and for maintenance purposes.

Filters shall be of vertical type and shall be provided with built in legs with proper supports to the concrete.
The filter shall be provided with unfiltered water distributors and header lateral type under-drain collecting system.

Maximum pressure loss across the filters should not be more than 5 mWC.

- The minimum depth of filtering media bed shall be decided on the basis of the filter media offered and shall not be less than 750 mm. At least 60% of free board shall be provided over the filtering media bed.
- Inspection opening shall be provided to inspect the internals and filtering media.
- The pressure filter vessel shall be internally painted with 3 coats of anti – corrosive paint and shall be coated externally with a protective paint.

© 2022 MECON Limited All rights reserved

Activated Carbon Filter: Refer specification of Activated carbon filter mentioned under chapter 07.

15.05.04 Chemical Storage cum Preparation/ Dosing Area

The chemical dosing/ storage system shall be provided considering the following:

- The chemical house shall be of two storied building having minimum two entries. One entry shall be provided with a ramp for truck entry.
- The ground floor shall be used for storage of chemicals and the first floor shall have chemical solution preparation tanks.
- The chemical storage capacity shall be for a minimum of 90 days consumption of chemicals.
- The process of preparation of chemical solution shall be designed so that it is safe to operate.
- Each of the solution tanks shall have a capacity to meet the requirement for a minimum 8 hrs period.
- One weighing machine shall be provided at the ground floor and weighed amount of chemicals shall be transported to the first floor. A pallet box shall be provided for lifting the chemicals. Six pairs of gloves for handling of chemicals along with measuring jars, dissolving trays etc. shall be provided for safe and proper handling and measurement of the chemicals. 1 Ton electric hoist at each floor shall be provided for handling of chemicals.
- Metering pumps with SS internals shall be used for dosing the chemical solutions to the flash mixer.
- Two pumps (one working + one standby) shall be provided dosing chemicals.
- Each of the solution preparation tanks and solution handling tanks shall be provided with agitators with electric drive. Material for agitator shaft and paddles shall be stainless steel (AISI 304).
- The solution preparation and holding tanks shall be interchangeable.
- The valves shall be provided as per requirement and specifications as per the relevant chapter in this specification.
- No effluents from the chemical house shall be discharged into the storm water drainage system after neutralization. Suitable facilities to achieve zero discharge of effluents shall be provided.

15.05.05 Sludge Pumping System

- Three nos. (1W+ 2S) sludge pumps shall be provided for the each clariflocculators. The capacity and head of the pumps shall be decided based on the sludge characteristics. The sludge pumps shall be of Ni hard, non-clog, centrifugal type.
- Sludge pumping system shall be so designed that the pump, pipe network and valves shall be flushed with industrial water after completing the cycle of pumping.

15.06 AIR BLOWERS

- Two twin lobe/tri-lobe type air blowers (One working and one reserve) complete with

© 2022 MECON Limited All rights reserved

accessories and piping shall be provided by the tenderer for air scouring of the filters. The air blowers shall be of oil free type. The blower may be of centrifugal type or rotary based on system requirement.

- The air blowers shall be complete with drive motor, D.O.L starter, base plate, coupling, coupling guard, bolts, nuts and gaskets, air filter, etc.
- The capacity and pressure of the air blower shall be decided to suit the requirement of the filters. The drive motor shall be selected with at least 15 % overload margin over the maximum shaft power requirement.

15.07 CHLORINE HOUSE AND CHLORINATION SYSTEM

For Electro-Chlorinator refer Cl. No. 20.01

- One chlorine house shall be provided
- The chlorine house shall consist of two rooms. One room shall be planned for chlorine storage and the other room shall be planned for dosing chlorine gas into the pipeline feeding filtered water to the overhead tank. The chlorine storage room shall have sufficient space to store one month's requirement of chlorine. The chlorine storage room shall also house the safety and supervisory equipment.
- The storage and dosing rooms shall be provided with 2 doors and the doors shall open outwards. The rooms shall be accessible to truck approach and shall be provided with ramps.
- Normally natural ventilation and means for cross ventilation shall permit changes of complete air in the rooms in about 10 to 15 minutes. Ventilators shall be provided at the bottom, one opposite to the other. The rooms shall be vented to upper atmosphere and shall be equipped with positive means of exhaust near the floor level, capable of complete air change within 3 to 4 minutes at the time of emergency. The ventilation system shall consist of a combination of fresh air inlet system and exhaust fans. The air fans shall have dry panel filters for supplying filtered air into the rooms. The supply air fan shall of tube axial type and the exhaust fan shall be of propeller type.
- Chlorine dosing shall be done with a view to maintain 0.5 mg/lit of free residual chlorine at the consumption points.
- The chlorine house and chlorine dosing system shall be designed as per IS - 10553 Parts I & II -1983 (RA 1990).
- The following safety and supervisory equipment shall be provided in the storage room.
  - 2 Nos. Gas masks.
  - 1 No. Residual chlorine testing kit.
  - First aid box and eye wash fountain.

15.08 SLUDGE AGITATORS

i. Suitable Nos. of agitator assemblies shall be provided for installation in the open topped slurry storage tanks to ensure the following:

a) To keep the solids in an appropriate degree of suspension
b) To prevent formation of stagnant conditions at any point of the tank
c) To facilitate intermittent batch pumping of the slurry in a predetermined controlled

© 2022 MECON Limited All rights reserved

manner without differential accumulation of size fractions within the tank.

ii. The slurry storage tanks will be of RCC construction will be constructed having required storage capacity (24 hrs). The tank will receive the underflow sludge discharged from the clarifier on a continuous basis and shall also receive the waste wash water and rinse water discharged from the Filter on a batch-basis during the back washing period.

iii. The selection of the correct agitator mechanism shall be based on selection of the appropriate propeller diameter and rotational speed to ensure that sufficient axial force is developed to maintain the solids in suspension in the storage tank to suit the aforesaid tank dimensions and the slurry characteristics.

iv. The agitator shall be of axial flow, single MIL (minimum induced loss) propeller type designed for the requisite duty conditions. The propeller shall be specifically designed to minimise the induced losses that are generated by the vortex sheets created by the pressure differentials in the liquid near the propeller trailing edges.

v. Each agitator assembly shall consist of a super structure which shall be mounted on the open topped slurry storage tank and shall support the gear box, motor, V-belt drive, shaft, propeller, etc. The super structure shall be fitted with necessary walkways and handrails also.

vi. Each agitator shall consist of the following major components: -

a) **Propeller:** - Keeping in view the height: area ratio of the tank and the anticipated percentage value of solids in the slurry, only one propeller will be used which shall be located at the bottom of the shaft. The propeller blades shall be made of SS and bolted to the flange(s) of the agitator shaft. The propeller assembly shall be balanced within limits, which shall be dictated by the weight and the proposed operating speed. Tenderer shall recommend whether the propeller blades are to be covered with any abrasion resistant rubber.

b) **Propeller shaft:** - The propeller shaft shall be constructed of SS and shall be provided with flanges welded to it at the top, bottom and intermediate positions (as required). The dimensions of the shaft shall be so selected that the running speed does not exceed 50% of the critical speed.

c) **Drive:** - Gear reducer drive shall be provided to suit to the exact duty requirements for the agitator. Medium sized propellers may be driven by gear boxes with vertical input shaft and vertically mounted motors and larger units will be driven by gear boxes with Horizontal shaft and horizontally mounted motors. The gear box will be of multi stage, helical gear variety and the complete gear and shaft assembly shall be housed in a high grade cast iron housing. The gear box shall be driven by a standard 4 pole motor via V-belts and pulleys fitted with tapered bush. The output shaft shall be fitted with a cast steel half coupling to match the propeller shaft

d) **Propeller shaft:** - The propeller shaft shall be constructed of SS and shall be provided with flanges welded to it at the top, bottom and intermediate positions (as required). The dimensions of the shaft shall be so selected that the running speed does not exceed 50% of the critical speed.

e) **Drive:** - Gear reducer drive shall be provided to suit to the exact duty requirements for the agitator. Medium sized propellers may be driven by gear boxes with vertical input shaft and vertically mounted motors and larger units will be driven by gear boxes

© 2022 MECON Limited All rights reserved

with Horizontal shaft and horizontally mounted motors. The gear box will be of multi stage, helical gear variety and the complete gear and shaft assembly shall be housed in a high-grade cast-iron housing. The gear box shall be driven by a standard 4 pole motor via V-belts and pulleys fitted with tapered bush. The output shaft shall be fitted with a cast steel half coupling to match the propeller shaft.

DEWATERING SYSTEM

15.09 General

As part of the water treatment plant, fully automated PLC controlled sludge dewatering plant shall be provided for handling the sludge from the unit.
The sludge dewatering plant shall be capable of producing filter cake of low moisture (=<30%) consistently. Suitable mode of filter cake discharge shall be provided under the sludge dewatering plant so that the filter cakes can be conveyed by trucks for final disposal. The dewatering station shall be PLC controlled and operated from a remote location

Design Criteria

The sludge dewatering plant shall consist of either 2 nos (1W+1S) of plate & frame type filter presses complete with all ancillary equipment and interconnecting piping.
The dewatering station will be PLC controlled and operated from a control room located in the chemical house / WTP
The filtrate from the dewatering station shall be led back to the thickeners/system

Filter Press

The filter press shall have high hydraulic capacity and shall be designed for dewatering the slurry efficiently with proper handling and disposal facilities for dry cake and 100% removal of filtrate, eliminating all blowback and residual lockup of filtrate.

The overall operating cycle time for each press shall be not less than1hour.

The filter fabric shall be capable of handling the desired slurry with appropriate weave, breaking strength, air permeability and long durability. The filter cloth shall not warrant any special cleaning. The filtering area shall be optimum.

The material of construction of the components of filter press shall be matching with the duty conditions. The filter press shall be completely assembled on an integral structural base.

Smooth sliding of plates over tie bar shall be ensure by suitable arrangement.

Cam arrangement shall be provided for enabling jerking action on the cake for dislodging it to the conveyor / hopper installed below the press.

© 2022 MECON Limited All rights reserved

The filter press will have high hydraulic capacity and will be designed for dewatering the slurry efficiently with proper handling and disposal facilities for dry cake and maximum removal of filtrate, eliminating all blowback and residual lockup of filtrate. The material of construction of the components of filter press will be matching with the duty conditions. The filter press will be completely assembled on an integral structural base.

Filter press frame

The filter press structure shall consist of feed head, moving plate, end plate and tie bars. The structure shall be MS fabricated of structural steel. The moving plate shall be mounted on the tie bars by means of rollers.

The filter press frame shall be strong enough to withstand forces of hydraulic cylinder during the operation of press.

Suitable coupling shall be provided for minimizing misalignment between the movable head and ram.

Filters tray shall be shall be constructed in MS with hard rubber lining of 3mm thickness.

Filter plates

Plate shall be rigid in construction for withstanding fluid pressure and hydraulic oil pressure for tightening during operation of press.

Filters plate shall be of the centre feed, four-cornered. Handles shall be provided on the sides of the plates for getting suitable support from tie bars.

Plate material and filter material shall be selected by the tenderer considering the pressure, temperature and analysis of the influent slurry.

Air manifold

A manifold shall be provided to allow air blowing through the press for removal of residual moisture at the end of the filtration cycle. Individual control valves for each of the corner discharge port shall be provided for the filtrate collection header. A common discharge header shall be provided for collection of filtrate and its conveyance.

After completion of the filtration cycle provision for drying of cake by air compaction shall be provided.

Hydraulic closure system

The hydraulic opening and closing system shall include one double acting hydraulic cylinder and one hydraulic power pack. The system shall be designed to automatically compensate for any thermal expansion or contraction of the plate stack as well as maintain the proper clamping force throughout the process cycle.

© 2022 MECON Limited All rights reserved

The hydraulic cylinder shall be capable of producing sufficient clamping pressure. The cylinder shall be of the tie rod design. The piston rod shall be covered by a flexible bellow to protect the rod from contamination and corrosion.

The hydraulic closure system shall consist of an electric motor driven hydraulic pump control valve, hydraulic pressure relief valve, hydraulic reservoir, and hydraulic cylinder. The hydraulic closure system shall be of a closed loop style. Press closing pressure shall be automatically controlled by pressure switches. The relief valve shall be on reverse line for pressure safety.

Controls

Control panel shall be provided at closing end of filter press. The PLC shall have 20% spare IO"s. the software to program PLC shall be provided.

The control panel shall provide either manual control or automatic control selector switch in weatherproof enclosure. The panel shall include necessary starter, control relays, timers. All components shall be prewired to a main numbered terminal strip. The connection sleeve shall be punched.

All solenoids valve shall be provide in separate SS enclosures.

The fuse terminal shall be provided with LED display for all solenoids.

Discharge mode of dry filter cake

Belt conveyor of suitable capacity and material of construction shall be provided for handling dry solids for final disposal by trucks. The belt conveyor shall be complete with suitable accessories like skirt board hopper, impact idlers, discharge chute etc.

15.10 STANDARDS

Latest standards shall be followed for different equipment, Pipes, etc:

16 DESIGN CRITERIA FOR EFFLUENT TREATMENT PLANT

The contaminated water from the respective units/shop (like gas cleaning plant of Blast furnace and BOF GCP) shall be treated in the Effluent Treatment Plant (ETP) comprising primarily the thickener units using polymer as coagulant, polyelectrolyte as flocculent and lime for pH correction. Hydraulics of the system shall be so designed that the clarified water from the thickener will be gravitated to the cooling tower top. The underflow sludge from the thickener shall be pumped to two nos. sludge storage tanks. A separate group of pumps shall be provided for disposal of slurry from the storage tanks.

The slurry pumps along with the facilities for chemical storage and coagulant/ flocculent dosing and pH correction shall be housed in the sludge pump house-cum-chemical house to be located near the thickeners.

© 2022 MECON Limited All rights reserved

16.01 GENERAL

Effluent Treatment Plant shall essentially comprise, but not be limited to the following units/facilities:

Sl. No.	Description
1.	Flash mixer complete with mixer blade, shaft, gearbox, motor, base plate, supports, etc.
3.	Thickener complete with raker arm, lifting device, feed well, approach bridge, drive motor gear box, limit switches, common base plate and underflow pumps, etc.
5	Sludge storage tank with agitator mechanism complete with paddle, shaft, motor, gearbox, base plate, platforms, handrails, etc.
6	Complete chemical dosing system
13.	Complete dewatering plant with cake disposal system

16.02 BROAD DESIGN GUIDELINES

- **Slurry Launder**

  Carbon steel basalt lined (30 mm thk.) / other generic ceramic lined (20mm thk) slurry launder complete with walkway, hand rails and structural support, shall be provided from the discharge point of Gas Cleaning Plant up to the ETP. The cross-section and the slope with available level constraints shall be so designed as to ensure a self-cleansing velocity (min. 1.5 m/s) to avoid deposition of solids at the launder bottom. The minimum free board shall be 300 mm to avoid spillage of slurry during plant operation.

- **Flash Mixers (if required)**

  RCC flash mixers with structural ladders, platforms, hand railings, etc. shall be provided two allow 60 seconds mixing time with the dosing chemicals. The outflow channels with walkways of removable chequered plates leading to thickeners shall be provided with gates to control/cut off the supply to thickeners. Local type pH measurements shall be provided before and after the chemical dosing.

- **Thickeners**

  Two number thickeners shall be provided for the system. Each thickener shall have capacity to treat 70% of the total effluent. When one of the thickeners is under shutdown the other one should able to take full load. The thickeners shall be of central drive type. The raker arm mechanism with gear reduction unit shall be provided. In the event of the raker arm getting jammed, audio-visual signals shall be available at the sludge pump house control panel. The raker arm shall be provided with lifting device (electro- mechanical type). Working position of the thickener shall also be depicted in the pump house. After encountering maximum torque

© 2022 MECON Limited All rights reserved

limit, the raker arm shall lift automatically by 300 mm and continue to rotate in the lifted position. At the preset torque level, the raker drive motor shall trip.
Sludge chamber shall be provided with manually operated knife edge gate valves to connect to the pump suction lines. Portable type local pH meter shall be provided to measure the pH of the clarified water.

- **Chemical House and Slurry Pump House**

(i) A two-storey building shall be provided in which the ground floor shall be used for storing chemicals, locating M.C.C. and slurry pumps. The first floor shall be used for preparation of chemical solutions and dosing.

(ii) Three slurry pumps (one working and two standby) shall be provided for each of the two thickeners. The capacity and head of the pumps shall be decided based on the sludge characteristics. The sludge pumps shall be of non- clog type horizontal centrifugal in Ni-hard construction having minimum hardness of 500 BHN.

(a) All valves for slurry operations shall be SS knife edge gate valves. Electrically operated valves, if any, shall have local and remote operations.

(b) The unintentional tripping of the drive motors, jamming of valves, etc. shall be accompanied by visual signal at the pump house control panel.

(c) Industrial water connections for flushing the pumps, pipe network and valves after completing the cycle of pumping.

(iii) Chemical storage-cum-preparation/dosing area

(a) The storage and handling facilities for the chemicals at the ground floor shall have capacity for at least 90 days' consumption

(b) Each of the solution tanks shall have a capacity of at least 8 hrs consumption.

(c) Metering pumps with SS internals shall be used for dosing the chemical solutions to the inflow channel/flash mixer. Two pumps (one working & one standby) shall be provided for each of the dosing schemes. The valves shall be of anti-corrosive type.

(d) Each of the solution preparation tanks and solution handling tanks shall be provided with mechanical agitators with electric drive. The solution preparation and holding tanks shall be of interchangeable type.

(e) The agitators of the solution tanks, chemical pumps shall have both local and remote controls. The operating position of these shall be indicated in the control panel of the pump house.

(f) Thickener overflow channel shall be designed with a provision to bleed off extra overflow, if any, into the area drainage networks as and when required.

© 2022 MECON Limited All rights reserved

- **Ventilation Facilities**

  Wall-mounted propeller fans of adequate capacity shall be provided for general air exchange and for dissipation of heat generated in the following premises:

  i. Ground floor of the Chemical House-Cum-Slurry Pump House.
  ii. The first floor of the Chemical House-cum-storage
  iii. Electrical Room – suitable air conditioning facility shall be provided.

16.03 DEWATERING SYSTEM:

For details, refer relevant clauses of chapter 15.

17. DESIGN CRITERIA FOR OIL SKIMMER

Oil skimmer shall be floating continuous tube type with cantilever boom arrangement.

The oil skimmer shall be designed to continuously move the collective tube over the complete width of each compartment of scale pit and secondary settling tank.

The oil skimmer shall be designed for 24 hrs. Operation

The oil skimmer shall be dual tube designed so that it can be used for skimming of two separate compartments simultaneously.

The oil skimmer should consist of MS Vertical Mast, Cantilever Boom with Swivel arrangement suitable for 360^0 rotation. Cantilever Boom should be fixed to the Vertical Mast on one side and Tube type Oil Skimmer is mounted on the other side.

The oil skimmer main body/ Housing of the Oil skimmer should be made from weather proof aluminium casting.

The oil skimmer tube should be made from Oleophyllic polymer and scrapers should be made from high abrasion resistant ceramic.

Oil scraped from the tube will be gravitated into the container located at 0.00 level thorough a pipe.

18 DESIGN CRITERIA FOR SAND FILTER

18.01 Following type of filter to be provided based on the type of application:

1. Scale removal system: Pressure sand Filters
2. For circulating water system and treatment unit (Side stream filtration, Make-up water system)

   : Auto Valve less Gravity Sand filter (AVGF) / Pressure Filters (PSF)

© 2022 MECON Limited All rights reserved

Following accessories (wherever applicable) shall be provided along with pressure filters:

(a) Air blowers common
(b) Frontal piping
(c) Pipe headers
(d) Pneumatic operated Valves
(e) Requisite no. of companion flanges, Gaskets, Bolts, nuts & washers
(f) Foundation bolts
(g) Electrics
(h) Instrumentation
(i) Pipe supports, etc
(j) Initial fill of filter media

Entire piping (headers & branches) is included in the scope of work.

a) For the backwash water from the backwash water over head tanks
b) For the air pipelines from Blowers to Filters
c) Waste water from the filters to the Waste Water Sump
d) Nitrogen/Instrument Air pipeline from 5m outside the shop to all pneumatic operated valves.
e) Make-up water (unfiltered) pipeline 5m outside the shop to all the Filters for Make-up water.
f) Filtered water make-up line from the filters to the Filtered water sump.

All termination points shall be flanged end connection and matching flanges are to be provided. The backwash water to be treated in effluent treatment plant. The ETP shall be provided as per chapter no. 16

18.02 **DESIGN CRITERIA:** As mentioned in the Relevant clauses of Chapter 15 for pressure filter and valve less gravity filter.

19 DESIGN CRITERIA FOR SLUDGE SCRAPPER ASSEMBLY

19.01 The sludge scrapper assembly shall be complete in all respects and shall broadly consist of the following components.

I) Truck assembly
II) Bridge assembly with bridge drive and hoist drive assembly.
III) Oil skimmer and sludge scraper Blade Assembly
IV) Festoon support assembly
V) Control panel.
VI) Cabling

20.0 DESIGN CRITERIA FOR CHEMICAL DOSING SYSTEM FOR RECIRCULATION SYSTEM

Various types of chemicals need to be dosed in the water recirculation system in order to

© 2022 MECON Limited All rights reserved

maintain the quality of water suitable for the application. The various dosing system are listed below:

1. Scale /corrosion inhibitors
2. Anti foulants
3. Biocides
4. Flushing chemicals
5. Passivation chemicals
6. Other chemical dosing system as required for treatments.

Note: Biocide dosing system shall be provided for recirculation system as per the following criteria:

1. One oxidising and one non-oxidising biocide to be used or
2. Two type of non-oxidising biocides shall be used.

20.01 ELECTRO-CHLORINATION PLANT

20.01.01 SYSTEM OVERVIEW

Constant chlorination is safe and efficient fouling control. To prevent Bio fouling in the condenser, PHE, cooling tower and other system components, an onsite generation of sodium Hypochlorite using electric chlorinating system for circulating water system shall be provided.

Large doses of chlorine will kill most marine lives and plant growth, except some that can close their shells, such as muscles and anemones. These survive for very long periods, which are eliminated by intermittent application of large chlorine doses for short duration of time.

20.01.02 TECHNICAL SPECIFICATION

In the Circulation Water chlorinating system, chlorine shall be dosed at the CW system / sump / cooling tower to prevent microbiological growth. The design dosage rate shall be 5 ppm for shock dosing. The dosage rate and duration must be line tuned to ensure a minimum required presence of 0.5 ppm in the entire system and at the consumer end.

The system will be designed such that the operation of the plant can be controlled and monitored from the control room located in the chlorination plant building / control room of the water complex. Starting and stopping of the plant shall be automatic and chlorine flow rate selection will be manual.

The unit should generate active chlorine in the form of neutral sodium hypochlorite, having strength of 5 g/I (5000 ppm), on a continuous basis round the clock. The Hypochlorite generation system shall consist of 2 streams, consisting of the following;

1. 2 set of electrolysers (1w + 1s)
2. 1 transformer rectifier
3. 1 dedicated Electrolyte preparation (dilute brine preparation) system

© 2022 MECON Limited All rights reserved

4. Hypochlorite collection & storage system
5. Hydrogen dilution system
6. Hypochlorite dosing & distribution system to the system.

20.01.03 DESIGN BASIS ELECTROLYSIS OF BRINE

The fundamental design rationale of the system shall be based on the concept of electrolysis of a dilute brine solution in an electrolytic cell. The predominant ions in dilute brine solution are sodium (Na^{+1}) and chloride (Cl^{-1}) which reacts according to the following equations:

Anode	:	$2\ CL^{-1}$	-	$2\ e^{-1}$	$\longrightarrow$	Cl^{2}
Cathode	:	$2\ Na^{+1}$	+	$2H2O + 2e^{-1}$	$\longrightarrow$	$2\ NaOH + H_2$
Combine	:	$2NaCI$	$+ H_2O$	electricity	$\longrightarrow$	$2NaOCI + 2H_2$

Secondary electrochemical reactions with magnesium and calcium can occur at cathode. These reactions produce hydroxides, $Mg\ (OH)_2$ and $Ca\ (OH)2$, which are relatively insoluble in dilute brine solution. The hydroxides precipitate from solution and can collect within the cell, unless prevented by proper design. The use of softened water greatly reduces this precipitation, and by using such cells, no or very low deposits inevitably collect at the surface of the cell. The collection of the deposits will bridge the anode and cathode gap permitting direct electrical conduction and will result in over-heating and destruction of the cell. Due to non- deposition of the hydroxides, acid cleaning is greatly reduced due to the unique design of the **BIPOLAR CELL** in combination with the softened water.

The generating cell shall be designed for the electrolysis of dilute brine solution. The cell shall be bipolar **plate type design,** consisting of the anodes, the cathodes and bipolar electrodes in between. The anode surface shall be coated with a platinum group metal formulation, while one half of the bipolar electrode at the Anode end shall be similarly coated. The coating materials shall be such that it promotes the discharge of chlorine and have a comparatively low activation over-voltage. The cell shall be accurately spaced and centered by inter plastic insulating supports. The electrodes that is, Anode Cathode and Bipolar electrode, shall be **Dimensionally Stable** in construction due to which it operates at constant and uniform current densities over its entire operating life, thus providing a consistent hypochlorite generation at the set current.

As artificial brine has a commercial value the chlorine concentration in the generated hypochlorite in this case shall be kept high, in the range of 4-9 g/l, titanium shall be the only alternative for the cathode material. The salt solution shall flows through the diaphragm-less cells energized with DC Current, and the anolyte and the catholyte are in the mixed from, and hence, is almost neutral sodium hypochlorite.

© 2022 MECON Limited All rights reserved

Due to the high chlorine concentration, there shall be a heat generation in the electrolysers during the electrolysis. Hence, chiller shall be employed so that the electrolyte enters the electrolyser at a reduced temperature, thus limiting the outlet temperature.

20.01.04 DESIGN DESCRIPTION

The equipment to be supplied shall be for an on- site system capable of producing equivalent chlorine in the form of sodium hypochlorite from artificial brine. The equipment will be supplied factory assembled, piped, cabled, wired and tested with all necessary controls, valves, fittings and fixtures, to provide correct operation to the maximum extent possible.

The basis for the capacity selection of the Electro Chlorination Generation System shall be as per requirement, using soft water and salt. Two nos. dosing pump (1W + 1S) shall be provided with required capacity and head as per the site requirement and piping to the point of dosing.

The proposed electro chlorination system to be installed for this application shall be designed to continuously produce chlorine equivalent in the form of sodium hypochlorite for anti fouling purposes at the required rate per generating unit, continuously operating. The feed water shall be softened and strained prior to entering into the Skid with a filtration size of 500 micron (35 US mesh) or better. The filtering process is essential to protect the various valve seats of the system and also the electrolyser cells from debris damage. The requirement will take care ensuring un-interrupted dilute brine solution feed flow to the Electro-Chlorinator system.

The softened water enhances the operating life of the electrolyser in between the requirement of 2 cleaning. As softened water is devoid of calcium and magnesium, which has a tendency of scaling of the electrolysers, by means of the use of softened water, the cleaning frequency greatly reduces, resulting in considerable reduction in operation downtime for cleaning and improvement in the electrolyser performance.

The proposed system shall consists of:

QTY.	DESCRIPTION
1	Brine preparation system: Brine preparation cum salt storage tank, made of FRP with internal Polypropylene lining.
2 Nos (1w + 1s)	Water softener
1	Constant electrolyte feed flow Control, including water and brine flow meters, control valves, static mixer, static mixer and instruments.
2 Nos (1w + 1s)	Electrolytic Cell, of rated generation capacity, consisting of one (1) electrolyser assembly and interconnecting cabling.
1	Pre-wired Power Supply Transformer Rectifier system
1	Pre-wired Control Panel.

© 2022 MECON Limited All rights reserved

QTY.	DESCRIPTION
Lot	All piping, pipefitting and valves. The piping shall be as below: Incoming water and brine piping/ lubing: U-PVC Hypochlorite piping for Electrolysers and up dosing pumps suction: PVC Dosing pump discharge up to joint of dosing U-PVC.
Lot	Instrumentation for the system
1	1 No. Degassifier cum hypo storage Vessel of PP-FRP, with Hydrogen dilution blowers and necessary instrumentation.
2	Hypochlorite solution injection pumps, one (1) working and one (1) standby, Centrifugal type.
3 Nos.	Hypochlorite diffuser, for installation at the dosing place
1 set	Water chiller unit including chilled water tank for cooling of water
1 set	Acid Cleaning system for the electrolyte including 1 No. tank, 2 acid recirculation pumps (1W + 1S) and associated piping
1 lot	Drain piping to just outside chlorination room
2 Nos (1w + 1s)	Chilled soft water pump
2 Nos (1w + 1s)	Brine pump metering type cap
1 set	Caustic storage tank with 2 numbers of effluent disposal pump
1 set	Safely shower & Eye wash fountain

20.01.05 DESIGN CRITERIA

The system shall be designed in three sections integrated together as below:

1. Salt storage & handling facilities.
2. Concentrated Brine preparation & storage system.
3. Electrolyte Preparation.
4. Hypochlorite Generation.
5. Hypochlorite collection, Storage and Hydrogen Degassing system
6. Hypochlorite dosing and distribution system.
7. Acid cleaning system for the electrolysers.
8. Miscellaneous items
9. Instrumentation & Control system for the plant.
10. Power Distribution system.
11. Neutralization system and effluent disposal system.

A. Salt Storage & Handling System:

In view of the very small capacity, the salt handling facility in the Electro chlorination plant may consist of a manual arrangement only, to unload the salt bags from the transport vehicle to the storage space the from there to the brine solution preparation tank.

The salt transported in bags shall be unloaded in the area adjacent to the Electro chlorination plant room. The brine preparation tank shall be constructed such that the top

© 2022 MECON Limited All rights reserved

of the tank is comfortable for the salt loading from the salt bags manually.

B. Concentrated Brine Preparation and Storage System:

The system requires brine flow. For this purpose, a brine preparation shall be provided. The capacity of the brine preparation tank shall be sized to suit salt storage requirement for 24 hrs. Hence, initially, about required quantity of granular salt shall be fed to the tank prior to water being fed, the layer of salt shall be held in place by means of Silex placed at the bottom of the tank. Softened water shall be consumed for saturated brine preparation. The salt shall be loaded through the manhole arrangement at preset time or any time of the day as convenient to the operator. Solenoid valve shall be provided to start stop the water feed in case the level in the brine saturator increases above the preset level, as sensed by the level transmitter located on the saturated brine chamber. The water shall pass through the layer of salt and saturated brine shall be generated from the bottom of the tank. The saturated brine shall then flows to another chamber in the brine preparation tank, separated by a partition, so that a stock of minimum 200 liters saturated brine is stocked A level transmitter shall be provided in the saturated brine storage chamber such that at low level, it will alarm to instruct the operator to check for restriction in the brine preparation path, either in the porous filter or the silex. A very low-level sensing shall be provided to trip the system in case of very low saturated brine level.

The brine preparation tank shall be made of FRP, and internally PP lined. The level switch shall be Ultrasonic type level transmitter.

The concentrated brine feed to the buffer tank shall start as soon as the proper water level reaches in the brine preparation tank.

A concentrated brine sampling point shall be provided.

C. Dilute brine (Electrolyte) preparation system:

A state-of-the-art dilution control shall be provided to achieve the desired electrolyte concentration and flow combination, which shall consist of a static mixer with flow rate control valve. To achieve this, the concentrated brine with higher concentration, shall be diluted by means of fresh softened and filtered water to achieve an electrolyte with required salt concentration.

The static mixer shall be designed to mix saturated brine having with the supply of water, resulting in a preparation of dilute brine solution at the outlet.

Hydraulics

The static mixer shall be designed to produce a specified dilute brine concentration as an electrolyte feed to the electrolyser for generation of Hypochlorite. The combination of the pressure due to the elevation of the Hypochlorite inlet at the storage tank and a slight pressure increase due to the cogeneration of hydrogen shall add to backpressure. A higher backpressure will require a higher inlet pressure. Hence, the softened water flow rate shall remain practically constant as long as the minimum specified water pressure is

© 2022 MECON Limited All rights reserved

available at the mixer inlet, and set saturated brine flow rate also remains practically constant, once set by the control valve. In case of low saturated brine flow rate, the electrolyser operating voltage increases, and hence, a high electrolyser voltage alarm is provided to enable the operator correct the brine flow rate. In case of no corrective action and the voltage increases further, the generation system trips to prevent oxygen and hydrogen production in place of chlorine.

A flow transmitter shall be provided to monitor the soft water flow to the electrolyser and trip the generation in case the soft water flow rate is less than the preset value. The booster pump at the inlet of the mixer is shut down and the standby pump is put in to operation to get the required flow of water.

D. Hypochlorite Generation:

The prepared and metered quantity of electrolyte passes through a series of Electrolyser. The hypochlorite generator shall consists of 1 set of electrolyser. DC current shall be passed through the brine producing sodium hypochlorite with hydrogen in solution. The amount of hypochlorite produced shall be directly proportional to the quantity of current passed through the cells. The chlorine concentration in the generated hypochlorite shall increase as the electrolyte passes from one electrolyser to another. The electrolysers shall be bipolar, plate type with horizontal configuration. The electrolyser shall be suitable for installation in a non-classified area (Non-Classified area is an area not classified under the hazardous area as per IS: 5572). The cell plates shall be arranged such as to prevent accumulation of hydrogen bubbles within the electrolysis area which can increase the resistively.

A sampling point shall be provided at the outlet of each electrolyser module to take samples for chemical analysis to determine the concentration of available chlorine in the generated hypochlorite. The sampling point will also be used to demonstrate the performance of the Electro chlorination system, generating chlorine at the required rate each at an available chlorine concentration of 5 g/l. This sampling valve also serves the purpose of a sampling valve at Hypochlorite tank inlet.

The DC current shall be provided by a 6-pulse Thyristor controlled Transformer Rectifier unit which rectifies the 415v AC supply into DC voltage and regulates this output to a preset level, by means of a closed loop constant current feedback. The rectifier shall be located indoors and shall be cooled by once –through forced air supply. It shall have built-in features, which shall protect the total system from over voltage, over current and high hypochlorite temperature. The control panel shall indicate all the operating parameters, controls and the faults that might occur in the system. Any mal-functions shall cause automatic shut down of this system.

Safety Features

The rated generation capacity of skid shall be as per requirement, with 5-g/l available chlorine concentration. The required operating DC current shall be achieved by a DC voltage of about 25 Volts. For this purpose, the rectifier shall be provided with required DC current rating @ 30V DC. The DC voltage can also increase in case of increase in the

© 2022 MECON Limited All rights reserved

operating current density due to scaling or contamination of the electrode plates, in addition to reduction in electrolyte brine concentration. The interconnection of the electrolyser with the rectifier shall be by means of copper cable in case of failure of constant current circuit, a DC over-current alarm shall also be provided as an added safety. Other electrical protections like fuses, single phasing, phase sequence reversal, AC overload etc. shall be provided as a standard.

The electrolysers' generators will also generate hypochlorite solution initiated by low level (LSL) and stop generation at high level (LSH) in hypochlorite solution. Tank and maintain sufficient level in the tank to enable the pumps to run off and on. The water flow will automatically start and stop, followed by start and stop of blower and then the electrolysers. When one pump trips, the standby pump start automatically.

The stopping of DC supply being fed to the electrolysers, shall be by means of inhibit of the trigger pulses to the thyristors, thus, operation of power contractors repeatedly to start and stop the DC supply shall be avoided, and hence reduce the maintenance on these parts.

Differential pressure switch across the electrolyser modules shall be provided for brine systems. The flow transmitter, the electrolyser outlet temperature transmitter and the over-voltage monitoring shall be provided to safeguard the electrolysers from operating against faulty operating conditions.

E. Hypochlorite Storage; Co-generation of Hydrogen, and its dilution & Venting System:

Hydrogen Gas shall be co-generated with the production of chlorine. The mixture of hydrogen with air is hazardous. The hydrogen gets separated from the hypochlorite liquor while it enters the hypochlorite storage tank. Product from the skids shall be collected to a Hydrogen Degassing cum dosing storage tank. The solution shall be required to be retained for a minimum of 5 minutes time to allow all hydrogen to disengage safely. The hydrogen shall be then diluted with air supplied by electrically driven blower, prior to being discharged to a safe location in the open air. This hydrogen shall be sufficiently diluted with air to less than 20% of LEL (Least Explosive Limit), which is 4.1% hydrogen in air. This entire venting system is very important from safety point of view.

Air is forced by operating a blower into the hydrogen – degassing tank, which will produce a mixture of 100:0.75 air /hydrogen, which will then be safely vented into the open atmosphere. The set of Blowers shall consist of one operating and one standby blower for diluting the liberated hydrogen. Atmospheric air enters at the blower suction and discharges into the hydrogen-degassing tank, and leaves out of the tank, diluting the liberated hydrogen, through a flow transmitter, to the vent at higher elevation. The diluted air shall be delivered such that the hydrogen concentration in the vent is about 0.75% v/v concentration (i.e. 18.75% of LEL). The dilution air flow low signal is provided in case the air flow reduces below which the hydrogen level can exceed 20% LEL (i.e. 0.8% v/v). This sensor will further ensure to cut-off the power supply to the electrolyser when the hydrogen liberated through the electrolyser can exceed the upper threshold limit of the air-hydrogen mixture. The start of the rectifier shall be only after the proper airflow is

© 2022 MECON Limited All rights reserved

achieved. The hypochlorite delivery pumps shall be stopped simultaneously with the generation to prevent air from entering the tank. The electrolyte flow through the electrolysers and then to the hypochlorite tank shall continue till the liquid in the tank reaches the maximum level, as controlled by the level switch. The hydrogen dilution system shall be interlocked such that hypochlorite (and hence hydrogen) cannot be generated or released unless the dilution system is in operation.

The hydrogen-degassing tank shall also be used for the purpose of maintaining a buffer stock of the generated hypochlorite solution and dosed as per the requirement. Accordingly, one (1) tank of adequate capacity shall be provided. The level transmitter installed on the tank shall operate the Hypochlorite generation system in latched mode to maintain the stock.

In addition, the tank has level transmitter. The low-level sensing LSLL prevents the accidental dry running of the dosing pumps while the high-level sensing LSH is to stop hypochlorite generation in case of high tank level. The hypochlorite generation restarts with the differential of the LSH itself, and keeps the hypochlorite level to the LSH set point when the hypochlorite dosing is not in progress. Another level sensing LSL shall be provided to annunciate the fault condition of hypochlorite level low, prior to stopping the dosing pump.

As the hydrogen liberation from the liquor hypochlorite solution in the tank may take up to 5 minutes, and the hydrogen bubbles is existing in the electrolyser, the blower shall continue to operate for minimum 10 minutes whenever the hypochlorite generation is stopped so that the liberated hydrogen is effectively flushed out. The electrolyte level in the electrolyser must be kept flooded for hydrogen to safely exit out, its flow must continue for till the level is achieved at the electrolysers outlet as sensed by the level switch hence preventing hydrogen accumulation within the electrolysers.

A sampling valve shall be provided at the outlet pipe leading to the dosing pump suction, to take samples for analysis of available chlorine, which is being dosed to the system. The difference between this sample and that at the electrolyser outlet will indicate the degeneration of available chlorine from the generated hypochlorite due to the storage period from the time elapsed between generations and dosing of hypochlorite.

F. **Hypochlorite Dosing and Distribution System:**

Shock dosing of hypochlorite solution shall be envisaged. The dosing shall be done at the CW sump / Cooling Tower. The hypochlorite product shall flow from the tank to the product dosing pumps. The start and stop of the dosing shall be by means of a timer. The duration and frequency of dosing can be set in the timer, based on which the dosing system shall operate cyclically. The dosing duration shall be fixed as per the circulating water loop time. The shock dosing will be done for duration of 1 loop time. Provision for manual dosing shall be also provided.

Diffusion of Hypochlorite in water:

Solution diffuser to aid the distribution of the solution through the process water flow

© 2022 MECON Limited All rights reserved

being treated shall be provided. The principle design considerations in the selection / design of diffuser shall be:

i) Quick, Uniform solution dispersion (mixing)
ii) Minimum process water flow restriction.
iii) Sturdy, rigid design to resist forces exerted by process water flow.

G. **Electrolyser Acid Cleaning System:**

A cleaning system to clean the cathode / anode of the electrolysers shall be provided. The cleaning system shall be common for hydrochloric acid or oxalic acid cleaning requirement with 5% HCI rinsing solution or a mixture of 5% Hydrochloric acid and 5% oxalic acid. This is required since during side reaction in the process of electrolysis, precipitation magnesium hydroxide and calcium carbonate deposition takes place at the cathode. Some of the precipitates are carried out of the electrolysers by the electrolyte flow, but due to the low velocity, some amount may remain stuck at the cathode, and some amount falls in the volume below the plates inside the shell of the electrolysers. This build up prevents a good circulation of the electrolyte in the cell.

Manganese and iron ions, if present, oxidize to MnO_2 and Fe_2O_3 and precipitate on the anode as mixed oxides, resulting in reduction of selectivity of the anode with resulting loss of efficiency.

The extent of cleaning frequency shall depend on the quality of salt and water. Only Vacuum refined salt with no impurities shall be used.

The cleaning system shall be permanently connected to each battery of electrolysers to form an integrated plant. The cleaning system shall have provision to circulate acid to form agitation.

An acid recirculation clean-in place tank shall be provided of Poly Propylene (PP), externally lined with FRP. Tank shall be provided with a sampling point to check the chemical concentration after the completion of each cleaning cycle to assess the re-usability of the chemical for next cleaning.

H. **Miscellaneous Items: Consumables**

Chemicals (cleaning chemicals), Lubricants (oils and greases), Salt supply for the system for the Electro chlorination plant as required shall be provided by for 3 months duration after successful commissioning of the Electro chlorination system.

The first fill of oil, lubricants and chemical reagents for flushing and cleaning of the system shall be provided. The first fill of resins for softener shall also be provided.

<u>Nameplates</u>:

All equipments will have permanent stainless-steel nameplates indicating the services, and the primary pressure rating, temperature rating tag numbers and customer's

© 2022 MECON Limited All rights reserved

tag numbers (where applicable). The valves, instruments and other items where possible, also shall have similar nameplates. Valves, instruments and other small or non-metallic items where it is not possible to fix a permanent nameplate, the details will be provided on a separate stainless steel tag plate.

Residual chlorine test kit:

A DPD colorimetric type portable test kit shall be provided, to check the free chlorine residual in the chlorinated CW water.

Guarantee

The electrolysers (Cell) coating shall be guaranteed for a life of 10 years from the date of commissioning.

I. **Power Distribution**

The Control circuit shall be designed to operate the Electro Chlorination Plant in a smooth, automatic and safe manner to a minimum of operator interference. The operation of the entire system shall be automatic, however the chlorine feed rates shall be set manually depending on the desired dosage rate. The Electrical Controls shall be achieved with the help of a number of pressure and temperature switches and instruments spread within the Electro Chlorination area. The operation interlocks, controls, alarms / annunciations shall be built-in the local control panel. The Electrical System consists of the following:

1. The Power Distribution Circuits.
2. The LCP

Power Supply Scheme:

The MCC shall provide 3 phase power to all the 3 phase electrical loads viz. the blowers, Acid cleaning pumps, Transformer – Rectifier for electrolysers, and single-phase power to LCP. All single-phase load including solenoid valves, will be fed from local control panel.

J. **Local Control Panel and Instrumentation & Controls**: The Local Control Panel (LCP) shall be pre-wired.

The following Protection interlocks for the electrolysers shall be **provided**:

1. Electrolyser outlet temperature high.
2. Electrolyte flow low.
3. Saturated Brine level low in brine tank.
4. Blower failure.
5. Electrolyser over voltage.
6. Transformer – Rectifier temperature high.

© 2022 MECON Limited All rights reserved

H **Neutralization system and effluent disposal system.**

All the effluent is to be treated and re-used in the system. No water is to be discharged in the storm water drain.

20.02 Chlorine Dioxide

Chlorine dioxide may be used in cooling water systems for control of Microorganisms at low dosages and is used over a broad pH range having an effective kill rate over the entire spectrum of microorganisms.

Chlorine dioxide is effective at high pH, unaffected by ammonia, and demonstrates significant advantages over chlorine in systems susceptible to high levels of organic contaminants. Chlorine dioxide is a selective oxidizer, it is able to control microorganisms in cooling water at very low dosages.

Chlorine dioxide may also be used for treatment of drinking water.

When used as a pre-treatment, chlorine dioxide aids in the prevention of carcinogens in drinking water by selectively oxidizing containments that may otherwise be transformed by chlorine into trihalomethanes (THM's). Simultaneously, ClO_2 acts as a biocide inactivating harmful viruses and other pathogens like E Coli and cryptosporidium with minimum contact time.

Characteristics of chlorine dioxide

Chlorine dioxide is 2.4 times denser than air. As liquid chlorine dioxide has a bigger density than water.

Chlorine dioxide is a small, volatile and very strong molecule. In diluted, watery solutions chlorine dioxide is a free radical. At high concentrations it reacts strongly with reducing agents. Chlorine dioxide is an unstable gas that dissociates into chlorine gas (Cl_2), Oxygen gas (O_2) and heat. When chlorine dioxide is photo-oxidized by sunlight, it falls apart. The end-products of chlorine dioxide reactions are chloride (Cl^-), chlorite (ClO^-) and chlorate (ClO_3^-).

One of the most important qualities of chlorine dioxide is its high-water solubility, especially in cold water. Chlorine dioxide does not hydrolyze when it enters water; it remains a dissolved gas in solution. Chlorine dioxide is approximately 10 times more soluble in water than chlorine. Chlorine dioxide can be removed by aeration or carbon dioxide.

ADVANTAGES OF CHLORINE DIOXIDE

- Chlorine dioxide is a very powerful oxidizing biocide.
- Chlorine dioxide is effective over a broad pH range.
- Chlorine dioxide has 2.5 times the oxidizing capability of chlorine.
- Chlorine dioxide is a selective oxidant.

© 2022 MECON Limited All rights reserved

- Unlike Chlorine, Chlorine dioxide remains a true gas dissolved in solution. Since Chlorine dioxide does not react with water, it retains its biocidal effectiveness even over a wide pH range.
- Consumption of chlorine is significantly higher as compared to that of chlorine dioxide to maintain similar residual levels.
- Required contact time for Chlorine dioxide is lower compared to chlorine.
- Chlorine dioxide has the ability to penetrate and remove biofilm formed and kills bacteria, spores and viruses.
- Chlorine dioxide is less corrosive than chlorine and does not hydrolyze to form acid.
- Chlorine dioxide does not form chloramines
- Chlorine dioxide does not form trihalomethanes upon reaction with organic matter.
- Chlorine dioxide is generally effective for the deactivation of pathogenic microorganisms. It is less effective for the deactivation of rotaviruses and E. coli bacteria.
- Chlorine dioxide has the advantage that it produces less harmful by-products than chlorine.
- By comparing the oxidation strength and oxidation capacity of different disinfectants, one can conclude that chlorine dioxide is effective at low concentrations.
- Chlorine dioxide is not as reactive as OZONE or chlorine and it only reacts with sulphuric substances, amines and some other reactive organic substances.
- Chlorine dioxide is a very effective bacterial disinfectant and it is even more effective than chlorine for the disinfection of water that contains viruses.
- Chlorine dioxide effectively deactivates the chlorine-resistant pathogens Giardia and Cryptosporidium.
- Chlorine dioxide removes and prevents bio film.
- Disinfection with chlorine dioxide does not cause odour nuisance. It destroys phenols, which can cause odour and taste problems.
- Chlorine dioxide is more effective for the removal of iron and manganese than chlorine, especially when these are found in complex substances.
- In comparison to chlorine and ozone, less chlorine dioxide is required to obtain an active residual disinfectant.
- It can also be used when a large amount of organic matter is present.

DISADVANTAGES OF CHLORINE DIOXIDE

- Chlorine dioxide gas is explosive. Chlorine dioxide is a very unstable substance, when it comes in contact with sunlight, it decomposes.
- During chlorine dioxide production processes, large amounts of chlorine are formed. This is a disadvantage. Free chlorine reacts with organic matter to form halogenated disinfection by-products.
- Chlorine dioxide and its disinfection by-products chlorite and chlorate can create problems for dialysis patients.
- Chlorine dioxide is generally effective for the deactivation of pathogenic microorganisms. It is less effective for the deactivation of rotaviruses and E. coli bacteria.
- Chlorine dioxide is about 5 to 10 times more expensive than chlorine. Chlorine dioxide is less expensive than other disinfection methods, such as ozone.

© 2022 MECON Limited All rights reserved

- When chlorine dioxide concentrations reach 10% or more in air, chlorine dioxide becomes explosive.
- Acute exposure of the skin to chlorine that originates from the decomposition of chlorine dioxide, causes irritations and burns. Eye exposure eyes to chlorine dioxide causes irritations, watering eyes and a blurry sight.
- The health standard for chlorine dioxide is 0,1 ppm.

Chlorine dioxide as an oxidizer

As an oxidizer chlorine dioxide is very selective. It has this ability due to unique one-electron exchange mechanisms. Chlorine dioxide attacks the electron-rich centres of organic molecules. One electron is transferred and chlorine dioxide is reduced to chlorite (ClO_2^-).

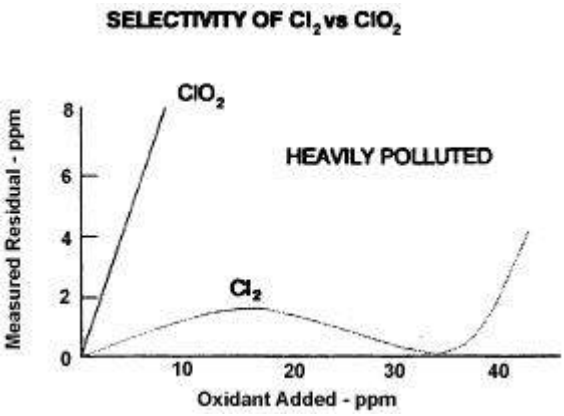

DISADVANTAGES OF CHLORINE

- Chlorine reacts with organics and hence exerts a Chlorine Demand and hence additional Chlorine has to be dosed to overcome the demand before a free residual is available to act as biocide.
- Efficacy of Chlorine is pH dependent. The Hypochlorous acid which is a desired component will dissociate to H^+ and OCl^- ions with increase in pH. HOCl content will decrease from 80% at a pH of 7 to 20 % at a pH of 8.
- Chlorine is highly corrosive and exposure to it can lead to rapid corrosion of unprotected metal.
- Chlorine is a toxic gas and hence storing and handling Chlorine poses severe risk to Environment, health and safety.
- Reaction of Chlorine with organics produce Trihalomethanes or THM's which are known to be carcinogenic and halogenated acidic acids.
- Chlorine does not have the ability to penetrate and remove biofilms formed.

<u>CHLORINE DIOXIDE GENERATION</u>

Chlorine dioxide shall be generated by following two methods viz. by Chlorine Gas method and by Sodium Hypochlorite method.

© 2022 MECON Limited All rights reserved

Chlorine Gas method

Chlorine dioxide is generated at site through a chlorine dioxide generator. In the generator unit, chlorine dioxide is generated by a chemical reaction that occurs when a controlled volume of precursor chemical is combined with a water stream containing Chlorine.

Following is the reaction for generation of ClO_2 by Chlorine gas method:

$2NaClO_2 + Cl_2 \rightarrow 2ClO_2 + 2NaCl$

Chlorine Dioxide Generator:

A Chlorinated water line will be fed to the Chlorine dioxide generator. Chlorine dioxide precursor will be dosed into the base of the generator column. Mixing and reaction takes place as the flow passes up through the column. Each chemical and the water should enter the generator column at a specific rate.

Outlet water from Chlorine Dioxide Generator will comprise of Water with Chlorine Dioxide. The dosing point will be the Cooling Tower sump on the circulating pump suction side.

Sodium Hypochlorite method

Chlorine dioxide is generated at site through a chlorine dioxide generator. In the generator unit, chlorine dioxide is generated by a chemical reaction that occurs when a controlled volume of precursor chemical is combined with a water stream containing sodium hypochlorite (minimum 12% active) and a Hydrochloric Acid (minimum 32 % active).

Following is the reaction for generation of ClO_2 by Chlorine gas method:

$2NaClO_2 + NaOCl + 2HCl \rightarrow 2ClO_2 + 3NaCl + H_2O$

A Chlorinated water line will be fed to the Chlorine dioxide generator. Sodium Hypochlorite and Hydrochloric acid will be dosed into the water line inside generator and Chlorine dioxide precursor will be dosed into the base of the generator column. Mixing and reaction takes place as the flow passes up through the column. Each chemical and water should enter the generator column at a specific rate.

Outlet water from Chlorine Dioxide Generator will comprise of Water with Chlorine dioxide. The dosing point will be the Cooling Tower sump on the circulating pump suction side.

There are several basic components that make up the generator unit. Each component is supplied as a complete system.

Chemical Metering Pump:

Positive-displacement metering pumps of appropriate size are mounted along with the generator unit. The output capacity of each pump can be readily adjusted while the pump is running, to meter the desired chemical feed rate.

Flow Rate Indicator / Flow Switch:

A combination flow rate indicator and flow switch is installed with the sensor in the water line and the meter and electronics housed in the electrical control box.

© 2022 MECON Limited All rights reserved

Built-in Safety Features

The generator unit shall have built-in safety features. If the water flow through the generator should inadvertently be shut off, all chemical feed will stop immediately.

TREATMENT RECOMMENDATION

Dosage: The optimum dosage for an oxidative application will be determined using a chlorine dioxide demand run preferably during field trial. However, recommend dosage of Chlorine dioxide at 1 ppm for 2 hours daily, which can be optimized after the practical run at site.

Point of Feed: Chlorine dioxide will be dosed in the cooling tower sump at the suction side of the circulating pumps.

Service program: Bidder to provide for complete application and monitoring of the system.

20.03 CHEMICALS

All chemicals shall be supplied in liquid form.

Scale / Corrosion Inhibitors.

- The scale / corrosion inhibitors shall be preferably of Phosphate – Organo phosphonate type.
- For soft water cooling with high heat flux system with soft water shall be conditioned with Nitrite, Borate, Azole, Polymer since we cannot use Phosphate, Phosphonate for the reason if any CaH (Calcium Hardness) slipped out of the softener will form scale with Phosphate. Once phosphate reacts with CaH it will be immuned by corrosion protection. The phosphonate also would get reverted to phosphate due to high temp. Also Nitrite, Borate, Azole, Polymer contains buffering agent, which helps in maintaining the pH of water in the proper range and gives metal conditioning treatment.
- Suitable Iron dispersant / anti foulants etc. may be blended in the chemical if required for any particular system.
- The chemicals shall be continuously into the circulating water by metering pumps at the required dosage rate.
- These chemicals shall be supplied in Carboys.

A) Deposit control agents

Tenderer shall indicate the trade name, composition, appearance, odor, pH optimal, pH after dosage, solubility gravity dosage, feeding dosage, solubility, specific gravity dosage, feeding procedure at feeding points of the deposit control agent.

B) Corrosion inhibitors

Suitable corrosion inhibitors shall be used for the control of corrosion in open re-

© 2022 MECON Limited All rights reserved

circulating cooling water systems. The corrosion inhibitor shall be fed to the re-circulating water, wherever found necessary, by means of a metering pump. Corrosion resistant feeding equipment shall be used.

Tenderer shall furnish the trade name, composition, appearance, specific gravity, pH recommended dosage, optimal pH after dosage, solubility, and freezing point, feeding procedure and feeding points of the corrosion inhibitor.

C) Anti-foulants

Suitable anti-foulants shall be applied for the prevention and removal of iron oxide and other metallic oxides in the water re-circulating systems wherever found necessary. The anti-foulants shall have good dispersing properties.

Tenderer shall furnish the trade name, composition appearance, pH specific gravity, solubility, freezing point, recommended dosing rate, feeding procedure and feeding points of the anti-foulants.

D) Biocides

Suitable biocides shall be provided for the control of bacterial, fungal and algal growth in the re-circulating cooling water systems. The biocides shall have good solubility and dispersing properties to ensure good distribution throughout the system and efficient penetration of the slime masses, to the encountered. Dosing rate and dosing points shall be judiciously selected based on the water analysis and the test to be carried out taking the following factors into consideration:

i. The nature and extent of the anticipated microbiological contamination for the different re-circulating water systems.
ii. The type and volume of systems to be treated.
iii. Quality of the makeup water
iv. The degree of recommended control of microbiological contamination.
v. Retention time in the system.

Tenderer shall furnish the trade name, composition, appearance, odour pH, solubility, freezing point, recommended dosage and procedure of feeding for the biocide.

- Two types of biocides shall be provided for dosing into each system. Each type of biocide will be dosed alternately.
- The biocides shall be selected considering slug dosage after every 15 days
- The selected biocides shall be effective against all types of micro-organisms including Iron bacteria, Sulphate reducing bacteria, algae and fungi etc.
- These chemicals shall be supplied preferably in carbuoys having sizes suitable for convenient handling.

© 2022 MECON Limited All rights reserved

20.04 MONITORING CHEMICALS

- The tenderer shall provide all the monitoring chemicals required for monitoring of system variables which control the dosage of chemicals.
- The system variables will be measured three times a day i.e. once every shift.
- The tenderer shall clearly furnish the list of chemicals along with quantity of monitoring chemicals proposed for the system.
- These chemicals shall supplied in Kits. Each kit shall have all required chemicals and measuring jars and instruments etc. for monitoring the variables. One such kit shall be supplied for each of the pump house.

The dosing chemicals shall preferably have minimum shelf life of one year. The chemicals shall not degrade while storage in an ambient temperature of 50^0 C.

The chemicals shall not inflame when exposed to sunlight / naked flame.

The chemical shall not produce excessive fumes and odour which are harmful to human beings.

The material of carboys and drums shall be chemically non reactive to the chemical stored in it shall be supplied.

20.05 DOSING SYSTEM FOR SCALE / CORROSION INHIBITORS

A structural platform shall be provided by the Contractor in the pump house for stationing the dosing pumps. This platform shall be constructed at a suitable height so that either 200 lit. Drums or small carbuoys can be stationed below the platform and the dosing pumps shall draw the liquid from the drums / carbuoys and pump it through the pipelines upto the dosing point.

20.06 DOSING PUMPS

All chemicals for scale and corrosion inhibition are required to be dosed continuously at a constant rate and shall be dosed by metering pumps.

2 Nos. metering pumps (1 working & 1 standby) shall be provided for each chemical.

The metering pumps shall be electronically controlled electro-magnetically driven with stroke and frequency setting arrangement and shall be complete with lub rings, check valves in suction and delivery, suction tube, foot valve and ant siphon / backpressure valve etc.

Pump flow rate shall be adjustable from zero to 100 percent of the specified rated capacity even while the pump is in operation. The stroke adjuster shall have requisite graduations to indicate the set flow rate and shall be fitted with a locking arrangement so

© 2022 MECON Limited All rights reserved

that the preset capacity does not change during pump operation. It shall also have suitable internal stops to prevent its detachment at settings below zero percent and above 100 percent.

Pumps shall be driven by electromagnetic power unit consisting of an epoxy moulded coil. The capacity of pump each chemical shall be decided by the tenderer depending on recommended dosage.

The MOC of chemical dosing pumps should be non-corrosive and polypropylene based. MOC of chemical dosing tanks shall be HDPE preferably.

20.07 PIPING

A piping network between the dosing stations and the dosing points shall be provided by the tenderer.

HDPE/UPVC/CPVC piping shall be used for pumping of the chemicals based on the suitability.

20.08 MONITORING APPRATUS

All monitoring apparatus like corrosion coupons, slides for bio testing etc. required for proper monitoring of each system shall be supplied and installed.

20.09 REPORTS

Three types of reports shall be furnished.

Test Reports

The test reports shall be furnished at an interval of every 1 months. The report's contents shall cover but not limited to the following items:

a) Predicted performance curves for the system with respect to corrosion rates and scale deposits
b) Actual performance curves
c) The details of variation in the various critical parameters being monitored in each shift for the previous period.
d) The dosage rate maintained during the period and its variation.

Monitoring reports

The monitoring reports shall be submitted every 2 months interval. The monitoring report shall include but not limited to the following:

a) Water loss figures, make-up water quantity for each system.
b) Health report of cooling tower
c) Actual cycle of concentration for various systems

© 2022 MECON Limited All rights reserved

d) Suggestions for improvement in cycle of concentration without affecting the guaranteed performance.
e) Suggestions for reuse of blow down of each system.

Chemical consumption reports

The report shall be furnished to Purchaser on a monthly basis. The report shall include the following:

a) Inventory position of each chemical
b) Ordered quantity
c) Chemical consumption figures for the previous month.

20.10 CONTROL PANEL

The control panel will be common for all the Chemical Dosing pumps of one dosing system and shall be suitable for mounting inside the Pump House Bay. The control panel shall be made of 2.5 mm thick CRCA sheet steel with IP-55 enclosure and shall be of floor / wall mounted type. The Chemical Dosing Pumps shall work in LOCAL made as per the control philosophy offered by the Tenderer.

The control panel shall consist of the following:

- Incoming MCCB of suitable rating.
- Outgoing feeders for all the Chemical Dosing Pumps consisting of fuses, contractors of minimum 32 Amp rating, thermal overload relays with built in single phasing preventer.
- All the control and protection components like HRC fuses, MCBs, relays, auxiliary contractors, selector switches, step-down control transformer, timers, push buttons, Power and control terminal blocks etc.
- LED indication lamps for incoming power supply ON, individuals Chemical Dosing Pumps ON / OFF / TRIP, etc.

20.11 FLUSHING OF CIRCULATING WATER PIPELINES

The tenderer shall ensure that the pre-cleaning chemical at the designed rate is being dosed in the flushing water during flushing of the circulating water pipelines.

20.12 PASSIVATION OF CIRCULATING WATER PIPELINES

The tenderer shall ensure that the Chemical quantity in the water during initial filling of circulating water pipelines is as per the designed quantity to ensure proper passivation of the piping network.

20.13 NORMAL OPERATION

During normal operation the tenderer shall ensure proper dosage of chemicals inside the circulating water.

© 2022 MECON Limited All rights reserved

All the manpower, equipments, consumables and chemicals required during testing, commissioning and normal operation shall be provided by the tenderer.

20.14 PERFORMANCE GUARANTEE

The Complete system shall be designed to achieve the following.

Uniform corrosion rate of 5 mpy maximum for steel components and 0.5 mpy for non ferrous components.

Pitting Corrosion rate of 12 mpy maximum. Uniform scale deposition rate of less than 3 mpy. Total Bacterial Count less than 100,000 per ml.

Sulphate reducing bacteria less than 100 colonies / ml. Iron Bacteria less than 100 colonies / ml.

In case, the treatment programme provided by the tenderer fails or requires additional chemicals to achieve the guaranteed performance, the tenderer shall supply the necessary additional chemicals and shall undertake suitable measures for the successful execution of the modified programme without any additional cost implication to the Purchaser. In case, the modified programme requires lesser dosage of the chemicals than originally quoted, the payment shall be made on the basis of the actual consumption of chemicals.

If any wastage of chemicals occurs due to improper storage environment / gradual development of cracks in the carbuoy / drum walls within the shelf-life period, the tenderer shall supply the lost chemical without any additional cost implication to Purchaser.

© 2022 MECON Limited All rights reserved

21 DESIGN CRITERIA FOR SURGE TANK / EXPANSION TANK

21.01 EQUIPMENT SPECIFICATION

Vessel shall be designed to meet the operation and performance requirements as furnished in respective Process Data Sheets.

CODES AND STANDARDS

The following codes shall be referred during the fabrication of pressure vessels and tanks.
Boiler and pressure: IS: 2825- 1969 (RA 1984) / ASME SECTION VIII DIV.1
Vessel Code
Welding : ASME SECTION IX Pipe Flanges :ANSI B 16.5
NACE Standard: MR 01-75 (Latest Edition)

And any other Codes / Standards / Specifications mentioned / furnished in the subsequent clauses of this technical specification.

21.02 DESIGN

- The design / engineering work related to preparation of fabrication drawings, weld joint and weld details, etc. shall be in Contractor's scope of work.
- Contractor shall furnish the capacity and design calculations for thickness of all major components like shell, head, nozzles etc. for approval prior to manufacture/fabrication. In case of any alteration in material or thickness, Contractor shall seek Purchaser's written approval. For CS vessels, the shell or head thickness exclusive of C.A. shall be taken, even if pressure/ load requirements may suggest lower thickness. Non pressure carbon steel parts (e.g. Skirt, lugs, Cleats, etc.) shall have a provision of 1.5 mm corrosion allowance.
- Minimum thickness of the shell will be 12 mm and that of disc ends will be 14 mm. Full radiography will be carried.
- Plates shall be bent along the direction of plate rolling for forming the cylindrical components of vessel. Plates shall have only positive tolerances on thickness.
- Carbon content of C.S plate shall not exceed 0.25%. One product analysis per heat shall be supplied.
- All vertical & horizontal vessels shall be provided with lifting lugs.
- Reinforcing pads for internal or external structural attachments to vessels shells shall be provided with a ¼". NPT vent hole. External vent holes shall be plugged with a plastic sealant after the vessel has been tested.
- All pressure vessels weld joints of category A and B shall be welded with full penetration and full fusion. Welds shall be as per ASME Code Section VIII Division 1, Table UW-12, NO.1.

VESSEL SUPPORTS

- The type of supports for vertical vessels shall be as indicated in the specification.

© 2022 MECON Limited All rights reserved

- Access opening in skirt, vent holes and piping opening shall be provided in supporting skirt as per enclosed standard specification.

- Skirt and adjoining vessel shell outside diameter shall be the same.

NOZZLES AND MANWAYS

- When the inside diameters of nozzles are specified, these shall be maintained. When the inside diameters of manways are specified, it shall be considered as a minimum.

- Nozzles, openings and their reinforcements shall be attached to the vessels with complete penetration welds.

- Nozzles upto and including 50mm NB in size shall be stiffened by 2 nos. 40 x 6mm thick flats welded at 90^0 apart.

- Nozzle flanges shall be as per ANSI B 16.5 type and rating as specified. Substitution of W.N. type flanges with Slip-on type will not be permitted.

- All manhole covers shall be hinged or provided with a davit along with suitable lifting handle. Bolts, Nuts, Gaskets including spares shall be in Contractor's scope.

- External reinforcing pads shall have a minimum of one vent hole except those pads for nozzles greater than 400 mm NB shall have a minimum of 2 vents and nozzles in excesses of 900mm NB shall have 4 vents. Pads installed by sections shall have at least one vent per section. All vents shall be tapped for future plugging and plug shall have ¼" NPT connection (max).

- Class 300 flanges shall be used as a minimum, unless mentioned otherwise for pressure relief valve connection.

- For heavy wall thickness vessels, integrally reinforced necks are preferred, although long welding neck flanges and built-up construction are permissible.

- Where 125 Ra is specified for flange surface finish, the range for acceptance shall be 63 Ra minimum to 250 Ra maximum. Finishes shall be judged by visual comparison with surface finish roughness standards conforming to ANSI B46.1. Where flange surface finish is not specified, it is the responsibility of the contractor for the gasket specified. Fabricator shall ensure suitable protection of flange faces, threaded connection, and machined surfaces, during transit.

- Lap joint flanges are not permitted in severe cyclic service. An example for sever cyclic service is defined in paragraph 300.2 of ANSI / ASME B 31.3 piping code.

© 2022 MECON Limited All rights reserved

- All flanges intended for use with spiral wound metal gaskets shall be designed using the manufacturer's minimum gasket seating stress or the ASME Code value, whichever is greater.

- special consideration for the prevention of over stressing the flange or bolts during gasket seating, when class 300 and lower flanges are used with spiral wound metal gaskets shall be given.

- Nozzle and manways shall not be located in tray down comers.

- All opening shall be cut off flush with the inside on the shell and the inside edge shall be rounded.

- Threaded fittings of tapped holes are not permitted.

- Internals like distributor piping, deflector, vortex breaker, tray support rings, demisters etc. are in Contractor's scope, including bolting and spares. Details of demister such as make, make type etc. shall be subject to MECON / Purchaser's approval during detailed engineering.

- Externals like manhole davit, pipe davit, insulation supports, Pipe supports, stiffening rings, fire proofing supports, name plate, etc. are in Contractor's scope, unless mentioned otherwise.

- Sizes of nozzles for safety valve shall be indicated during approval of G.A drawings by MECON / Purchaser. Contractor's scope shall include supply of nozzles with flanges, etc.

- Nozzle orientation shall be subject to MECON / Purchaser's approval during detail engineering.

21.03 MATERIALS

- All materials used in the vessels shall be new and of the type and grade specified in the specifications / drawings. All plates shall be supplied in normalized condition.

- Materials of construction of vent stack and seat drum shall be selected as per the requirement of NACE, MR-01-75.

- Each plate or forging shall be legibly stamped or stenciled showing grade number and plate or forging number. When metal stamping is done it shall preferably be on the long edge of each component as it leaves the mill. Metal stamping on rolled surfaces shall be done with a "low stress" stamp.

- Internal support rings shall be of the same material as the shell in killed steel vessels unless otherwise mentioned, except in lined portions of vessels where they shall be alloy corresponding to the lining. They shall be continuously

© 2022 MECON Limited All rights reserved

welded on the top and stitch welded on the bottom when carbon steel and continuously both sides when alloy.

- Plates from 16 to 50mm shall be ultrasonically tested as per SA 435 and above 50mm as per SA 578 for an Acceptance Level-1.

- All bought out items by fabricator shall meet the relevant inspection requirements and test certificates.

21.04 FABRICATION

- Vessels heads may be deep torispherical or 2:1 semi-ellipsoidal. Plate thickness selected for vessel heads shall include due allowance for thinning during the forming operations.

- Dished ends in vessels upto 2.0m shall be made in one piece. When a formed head is made from more than one plate, it shall have a crown plate having diameter greater than that of the reinforcing pad of any nozzle located at the centre of the head. The central part of cordial seam blank shall be at least 50mm or 3 times plate thickness away from the beginning of knuckle curvature. The inside and outside surfaces shall be MP/DP examined for detection of cracks.

- Fabricator shall check for possible fouling / clash or attachments with each other and with weld seams. Such fouling shall be resolved in consultation with the Purchaser.

- Skirt and other attachment welds shall have complete fusion for the full length of the weld, and shall be free from undercut, overlap, or abrupt ridges or valleys. All internal attachment welds shall be continuous, unless otherwise mentioned.

- Edges shall be prepared after cutting, machining or grinding to eliminate defective material or discoloration. All welding edges of above 25mm thickness and the welding edges of dish ends of all thickness shall be checked by MP/DP examination for detection or cracks, bruntations or segregations.

- Drawings and instruction for fabrication and installation or tray and mesh blanket supports attached to the vessel shall be furnished by the appropriate supplier of the vessels internals. The vessel attachments shall be installed in accordance with the instructions, and specifications, by the vessel manufacturer. It is the responsibility of the vessel manufacturer to supply, or cause to be supplied, all materials required for the fabrication of the vessel attachments for the support of internals.

- Insulation supporting lugs / rings / pins / studs at a pitch of 300 mm over vessel surfaces shall be provided wherever applicable.

21.05 WELDING

© 2022 MECON Limited All rights reserved

a) All welding shall be done by a metal arc process. Only approved WPS, and qualified welders shall be engaged.

b) Covered welding electrodes for non-alloy welding shall be in accordance with specifications AWS A5. 1, ASME SFA-5.1.

c) Bare electrodes shall be in accordance with the following: -

WELDING PROCESS	ELECTRODE
Submerged Arc Welding	AWS A 5.17, ASME SFA-5.17
Inert Gas Welding	AWS A 5.18, ASME SFA-5.18
Flux-cored Arc Welding	AWS A 5.20, ASME SFA-5.20

- Deposited weld metal mechanical properties shall conform to the ASTM requirements for the base metal.

- Backing up strips, if used, shall be removed.

- Circumferential welds shall be so located that visual inspection can be made with all internal equipment in place.

- Seams in supporting skirts shall be made with full penetration butt welds. Connections between skirts and vessel heads shall be made with a smooth flat faced weld, unless otherwise shown. The width of the weld shall be at least equal to the skirt thickness, and its height shall be twice its width.

- All welding directly to the vessel shall be completed prior to final treatment.

- All welded joints for vent stack & seal drum shall be 100% radiographed. As a minimum requirement all other pressure vessels shall be spot radiographed (minimum 10%). Each spot radiograph shall be a minimum of six inches (152 mm) in length and in accordance with the ASME code. All welds to be covered by nozzle reinforcing pads and at least one weld intersection shall be radiographed. Non-radiographable welds shall be examined by magnetic particle or dye penetrant as a acceptable alternative.

- For vessel shell thickness 2 inch (50 mm) and greater, 100% ultrasonic examination is required in accordance with the ASME code, after final post weld heat treatment.

21.06 HEAT TREATMENT

- Vent stack & seal drum shall be stress relieved after welding to meet the required hardness etc. as per the NACE stipulations.

- For carbon steel formed components, including dished ends, stress relieving shall be performed as per ASME Section VIII Div. 1, (UCS – 79).

© 2022 MECON Limited All rights reserved

- In addition, cold formed carbon steel heads and knuckles shall be stress relieved when their thickness is 16 mm or greater. Hot formed heads shall also be normalised in case they are formed at temperatures below the normalizing range. Hot formed dished ends or similar parts, which have not been uniformly heated in the normalizing range in the final stages of manufacture shall be normalized.

- Vessels in caustic service, amine or sour gas service shall be stress relieved.

- Flange facings must be protected against oxidation during heat treatment.

21.07 PAINTING

Vessels shall be cleaned by sand blasting prior to painting to Sa 2 ½ grade.

All uninsulated carbon steel surfaces shall be given two coats of epoxy zinc chromate primer (P-5) with min. DFT of 35 microns per coat followed by two coats of acrylic polyurethane finish coat (F-2) with min. DFT of 30 microns per coat.

- For insulated carbon steel surfaces, (i.e. Test storage tank) two shop coats of red oxide zinc chromate primer (P-1) with min. DFT of 35 microns per coat shall be given.

- Earthing lugs shall only be cleaned by wire brush and not to be painted.

- Sand blasting is not required for internal surfaces of vessels. Only wire brush cleaning is required for the same. However, wherever internal surface painting has been specified, i.e. in Test storage tank, sand blasting will be required.

© 2022 MECON Limited All rights reserved

22 RECYCLE / REUSE OF CT BD & WASTE WATER

To minimize make up water consumption and to achieve zero discharge The process waste water, Neutralised effluent from DM/Soft water plant and ETP, cooling tower blowdown water and other liquid waste generated in the plant shall be recycled and reused in the system after necessary treatment as required.

The reject from the RO plant shall be taken to the crystallizer based Zero Liquid discharge Plant.

22.01 CT BD TREATMENT

The CT Blowdown treatment plant shall have following stages of treatment scheme for satisfying the norms of treated water quality.

PRIMARY TREATMENT (Flash Mixer, Solid Contact Clarifier Reactor) TERTIAIRY TREATMENT (Multi Grade Filter)
ADVANCED MEMBRNAE TECHNOLOGY (Cross Flow Filtration, Reverse Osmosis).

22.01.01 PRIMARY TREATMENT

Effluent generated from the various sources shall be collected into Equalization tank having retention time about 2 hours or as per system requirement where Sodium Hypochlorite / suitable chemical shall be dosed. One tank in MSRL construction with agitator and two dosing pumps shall be provided for dosing Sodium Hypochlorite for pre-chlorination purposes i.e. to take care of BOD & COD present in blow down water. Blow down water from the tank shall be pumped by means of two pumps (one working and one standby) to the pre-treatment units i.e. HRSCC/Flash mixer to remove the suspended matter.

FLASH MIXER

The raw effluent from equalization tank shall be pumped to flash mixer unit, where Lime, Dolomite shall be added to increase the PH of effluent, for reduction in silica content of raw effluent and to enhance the settling of solid particles present in effluent.

HIGH RATE SOLID CONTACT CLARIFIER (HRSCC)

After Chemical reaction with the lime and dolomite the effluent shall enter under gravity to HRSCC where $FeCl_3$ and Polyelectrolyte shall be dosed in the effluent.

The incoming solids brought in contact with a solid layer near the bottom. The incoming solids rise and come in contact with solids in the sludge layer.

This layer act as a blanket and the incoming solids agglomerate and remain enmeshed

© 2022 MECON Limited All rights reserved

within this blanket.

The clarified water rises upward while a distinct interface retains the solids below.

The Solid contact clarifier has better hydraulic performance and has minimum retention time for effective solids removal. Surface loading rate to be considered for HRSCC design shall be 35-40 m3/day/m2. Flocculation time to be considered shall be 25-35 mins and retention time in clarification zone shall be 100-120 mins.

The sludge generated from HRSCC will be collected in sludge sump and will be pumped to sludge drying system.

Overflow from the clarifier shall be treated with Ozone before collecting into the Clarified water tank.

22.01.02 TERTIARY TREATMENT MULTI GRADE FILTER (MGF - ACF)

Clarified water will then pass through the MGF for removing suspended solids, turbidity etc. The arrested solids/ turbidity in the filter shall be removed by back washing.

The Multi Grade Filter is made of M.S.E.P vertical vessel. It is fitted with top inlet distributor and header - lateral type of bottom collecting system. Externally this unit is fitted with frontal pipe work and control valves. The unit is isolated for backwash, when the pressure drop across the bed increases than specified limit (0.8 Kg/cm²) or quality of filtered water deteriorates, whichever is earlier. For other details of pressure filter and ACF, please refer relevant clauses of Chapter 07.

Activated Carbon Filter (ACF) shall be provided for de-chlorination purpose and accordingly. one ACF along with all piping shall be provided. Back washing of ACF shall be done with the help of OHT and waste back washed water shall be used for dilution of RO reject.

DEWATERING SYSTEM

Dewatering is a physical unit operation used to reduce the moisture content of sludge. Sludge generated from clarifier shall be dewatered.

The filtrate shall be routed back under gravity to the equalization tank.

The filtered and sterilized water shall be dosed with hydrochloric acid for lowering pH so as to avoid the possibility of scale formation on membranes.

pH correction of feed water shall be followed by chemical treatment with sodium hexa-meta-phosphate (SHMP) or other suitable chemical to be decided by the contractor.

Acid and SHMP dosing systems shall consist of acid day tank and SHMP Mix tanks respectively and separate dosing pumps for each system. Further, a bulk acid storage tank

© 2022 MECON Limited All rights reserved

and two unloading pumps shall be provided for handling of acid.

22.01.03 ADVANCED MEMBRANE TECHNOLOGY

Membrane filtration (Ultra-filtration) module has been used widely for the removal of colloidal matters like silica, suspended solids & pre-treatment to reverse osmosis system. It also helps in removing COD, BOD large extent due to separation of solids.

The treatment system for blow down water shall comprise two RO trains of latest technology. The RO system shall be sized to produce the rated output and quality for the entire life of the membrane. As such, initial operating pressure at any temperature shall be maintained at a minimum value to keep the membrane compaction rate within the design value. High pressure pumps shall be selected to permit inlet pressure adjustments to be made to compensate for membrane compaction and temperature variations.

The pre-treated filtered water will be passed through basket type strainer & then through the filtration skid.

For the removal of colloidal suspended solids, colloidal solids that may be present in the water, we are offering a skid mounted, automatically operated Filtration system. Removing of solids from the water will help in reducing the COD, BOD content in the water.

The reject generated from the filtration shall be taken back into inlet of Flash mixer Tank

This system will have the facility of automatic valves provided on the backwash & reject line to facilitate on-line backwashing. This function is being controlled and monitored by PLC operation and hence avoids any manual operation or supervision.

. REVERSE OSMOSIS SYSTEM

Pre-treated water after adjustment of pH and chemical conditioning shall be pumped by high pressure pumps (two working pumps and one standby pump) into reverse osmosis train. The permeate from pressure tubes of R.O. blocks shall be combined and shall flow to the degasify column.

Provision shall be made for flushing of the system automatically after each shutdown so as to prevent the precipitation of sparingly soluble materials on the membrane surface during periods of shutdown.

Carbon dioxide is removed in the degasify column by means of two air blowers (one working and one standby). pH of the degasified permeate will then be corrected by caustic soda.

The alkali dosing system shall consist of one alkali preparation tank, one alkali day tank and two alkali metering pump. Alkali preparation tank shall be fitted with agitator for

© 2022 MECON Limited All rights reserved

making solution using flakes.

Dosing of Antiscalant in the RO Feed is to be done to make sure that the Feed Water Scaling tendency on the Membranes in controlled within the limits. The system comprises of dosing pump and solution tank.

Micron Cartridge Filter to be provided which removes fine colloidal suspended impurities, which have escaped from upstream units. The unit can reject fine solids upto 5 µ, which if carried over can clog the RO membrane. The unit shall be fitted with special type of cartridge, which is having more dirt holding capacity compared to other standard type of cartridges.

For the development of High pressure required for RO System we Vertical Multistage Centrifugal Pump may be provided.

The RO system shall comprise of R.O. membranes housed in FRP Pressure Vessels. All interconnecting low-pressure shall be Extra Strong u-PVC and high pressure shall be Stainless Steel – SS304. Necessary instrumentation to be provided to monitor the operation of the system.

Dedicated Chemical Cleaning System comprising of a Chemical preparation tank, a Centrifugal Pump in SS Construction and a cartridge filter unit shall be provided.

- The process scheme should incorporate hollow fibre Ultrafiltration followed by Reverse Osmosis.
- The Ultrafiltration membrane should be operated on dead end mode/cross flow mode.
- The ultrafiltration membrane should be from reputed manufacturer as per GS-13.
- The Ultrafiltration membrane should be designed at low flux not exceeding 35 GFD.
- The Reverse osmosis system should be built for a suitable low flux not exceeding 10 GFD. The membranes used should be of reputed make of low fouling type.

AUTOMATION PHILOSOPHY:

The Cross flow Filtration system will have automatic operation. Necessary tripping facilities shall be provided through PLC for safe operation of the system. When the system trips, there will be visual display in the panel and also annunciation to this effect.

The R.O system will be manually operated. Since cleaning to the membrane system requires intermittently, manual operation system provided for cleaning of both filtration as well as RO Systems.

© 2022 MECON Limited All rights reserved

EQUIPMENT SPECIFICATION

The proposed reverse osmosis plant shall be housed in a building. The building shall house multimedia filters, UV sterilizer, cartridge filters, high-pressure pumps, RO modules, various chemical dosing facilities, degassed water pumps, chemical cleaning and flushing facilities, and control panel. The contractor shall plan the degasser tower, degasser blower and degasified permeate tank outside the RO plant building. The building shall be provided suitable material handling and ventilation facilities. Provision for storage of all chemicals for meeting at least 15 days requirement shall be kept.

SHMP DOSING

A dosing tank in MSRL construction will be provided along with SS304 agitator for dosing of SHMP in the feed to the cartridge filter. The diaphragm type dosing pump is a solenoid operated variable discharge pump. The pumps are calibrated to dose a pre-set quantity of the chemical.

HIGH PRESSURE PUMPS

Pumps will be mounted on the respective RO skid and one reserve pump shall be supplied which will also be mounted on RO skid.

R.O. TRAINS (BLOCKS)

The R.O. train shall be installed having capacity to meet the required through-put. RO train shall be equipped with valves, piping work, flushing and cleaning connections, instrumentation and control console. R.O. train shall be an integrated assembly of high strength fiber glass reinforced epoxy thermally cured pressure tubes housing the R.O. membrane elements, feed, product and concentrate piping, all mounted on a high-strength steel structure.

RO train shall receive high pressure feed water through a pressure control valve which will be preset to a specific operating pressure to maintain design permeate flow rate. Necessary protection device shall be provided against potential start-up surge pressures. High pressure alarm system shall be provided to prevent excess pressure on the feed side.

RO MEMBRANE CLEANING SYSTEM

The contractor shall provide membrane cleaning system in the RO plant by chemical recirculation when the pressure drop across the system exceeds the preset value. The cleaning system shall comprise chemical solution tank, chemical recirculation pump and cartridge filter. The chemical solution tank shall be provided with motorized stirrer to prepare chemical solution.

AUTO PH CORRECTION FACILITIES

Facilities shall be provided to dose either caustic soda or soda ash into the degasified permeate tank for final pH correction to 8 (approx.). These shall be done on automatic

© 2022 MECON Limited All rights reserved

basis.

Alkali preparation tank in MSRL construction equipped with motor driven agitator. Alkali dosing tank in SS construction.
Alkali dosing pump in SS construction.

22.02 ZERO LIQUID DISCHARGE PLANT

22.02.01 PROCESS DESIGN BASIS

The feed to the Zero Liquid discharge Plant shall be the streams from,

1. DM plant regeneration waste water (if TDS is greater than 6000 ppm)
2. RO reject from RO plant

The reject streams TDS may not be more than 6000 ppm. This needs to be concentrated to almost 60,000 or more using either a membrane based concentration step or a thermal based brine concentrator for the process to effective and technically feasible.

The design shall based on the indicative analysis as given below:

REJECT WATER ANALYSIS

Total dissolved solids	:	76000 – 80000 ppm
SO4 as such	:	- 6500 ppm
CI as such	:	- 45000 ppm
Na as such	:	- 25000 ppm
Hardness as CaCO3	:	< 10 ppm
pH	:	8.5 – 10.5

The outlet quality parameters shall be as follows:

Distillate purity	:	< 50 ppm TDS
Temperature	:	50 – 60^{0}C
Crystallizer solids	:	< 20% moisture content

22.02.02 PROCESS DESCRIPTION

The system being shall be based on Mechanical Vapor compression (MVR) / Thermal Vapour Recompression (TVR) principle. The system shall be fully integrated automated system incorporating vapor compression unit centrifuge. The high purity distillate produced in the system shall be used as process makeup water. The evaporation system shall be sized for concentrating R.O. rejects and shall have the required normal water evaporation capacity.

The reject from the waste streams shall be collected in separate wastewater tanks. The wastewater shall then be pumped at constant rate for preheating by exchanging heat with

© 2022 MECON Limited All rights reserved

the outgoing distillate. The most cost-effective plate and frame exchanger for this service shall be provided. The preheated reject shall flow into the flash tank. The Slurry shall discharge continuously from the flash tank to the centrifuge. This slurry is fed to the centrifuge which shall separates out the salt crystals as a cake.

The evaporated vapor shall flow through the mist eliminator in flash Tank to the suction of the Mechanical / Thermo Vapor Compressor. The compressed vapor shall flow to the heating side of the evaporator. As it condenses, it shall transfer the latent heat of vaporization back to the liquid film on the tube side. Condensed water vapor shall be pumped out of the system as distillate after transferring heat in the forced Circulation Heat Exchanger.

23.0 SPARES & CONSUMABLES

A) Commissioning spares

Commissioning spares as required shall be in the scope of supply of the Tenderer along with the equipment. It shall cover requirement of trial runs and part testing also.

B) Consumables.

consumables like first/initial fill of lubricants, oils, grease, chemical, resins etc. as required to complete the plant till commissioning shall be supplied. The scope of consumables shall include electrodes, shims, packing bolts, nuts, gaskets, rivets, washers etc.

The Contractor shall also indicate monthly and annual requirement of all consumables.

C) Operating, maintenance and capital spares

The supply of spare parts as necessary and as recommended the respective manufacturer for two years of reliable and trouble-free operation and maintenance of all equipment shall be suplied.

© 2022 MECON Limited All rights reserved

D) Special erection/maintenance tools and tackles.

complete and unused set of all the special tools and tackles including required number of toolboxes as required for erection, maintenance, overhaul or complete replacement of the equipment and components required for the plant shall be supplied.

All the tools shall be supplied in separate containers clearly marked with the name of the equipment for which they are intended.

E) Completeness

Any equipment, fittings, materials or supplies which may not be specifically mentioned in the specification or drawings but which are necessary for smooth and normal operation of the plant and equipment shall be provided without any extra cost. The plant must be complete in all respects and shall be in perfect running conditions to comply with the guaranteed performance.

© 2022 MECON Limited All rights reserved

24 DATA SHEETS

24.01 DATA SHEET FOR PUMPS

A. HORIZONTAL CENTRIFUGAL PUMP SETS (To be furnished by the Tenderer separately for each group of pumps)

Sl. No	DESCRIPTION	Data to be filled in by Tenderer
1	Type of pump	
2	Make and model of pump	
3	Pump operating characteristics	
a)	Rated capacity of each pump m3/h	
b)	Total dynamic head (TDH) at rated capacity mWC	
c)	Shut off head mWC	
d)	Speed rpm	
e)	Pump efficiency at rated conditions %	
f)	Pump shaft power at rated capacity kW	
g)	Required NPSH mWC	
h)	Type of gland sealing	
i)	Mode of connecting pump to motor	
j)	Direction of rotation	
k)	Impeller diameter (min, rated, max)	
l)	Type of end connection - Suction flange bore - Discharge flange bore - Drilling standard for flanges	
m)	Setting depth (In case of vertical pumps)	
4 a)	Type of shaft seal	
b)	In case of external water seal (required water pressure)	
5	Bearings	
	a) Type	
	b) Make	
	c) Quantity provided	
	d) Type of lubrication required	
6	Couplings	
	a) Type	
	b) Make	

© 2022 MECON Limited All rights reserved

Sl. No	DESCRIPTION	Data to be filled in by Tenderer
	c) Coupling guard provided or not	
7	Base plate with holding down bolts and nuts provided or not	
8	Companion flanges at suction and delivery of pump included or not	
9	Weight	
	a) Pump	
	b) Base plate/motor stool	
	c) Accessories	
10	Materials of Construction of pump components (Indicate the applicable IS/BS/ASTM standard and grade)	
	a) Impeller	
	b) Casing	
	c) Casing ring	
	d) Impeller ring	
	e) Shaft	
	f) Shaft sleeve	
	g) Gland	
	h) Base frame	
	i) Companion flanges	
	j) Bearing	
	k) Suction strainer	
11	Drawings enclosed	
	a) GA drawing	
	b) Catalogue	
	c) Predicted performance curves	
	d) Speed vs torque curve for pump considering open valve operation	
	e) Speed vs torque curve for motor	

© 2022 MECON Limited All rights reserved

B. VERTICAL CENTRIFUGAL PUMPS

Sl. No	DESCRIPTION	Data to be filled in by Tenderer
1	Type of pump	
2	Make and model of pump	
3	Quantity	
4	Pump operating characteristics a) Capacity of each pump (Rated, Min. and Max.) m^3/h	
	b) Total dynamic head (TDH) at rated capacity and Shut off Head mWC	
	c) Speed rpm	
	d) Pump efficiency at rated conditions %	
	e) Pump shaft power at rated capacity kW	
	f) Required NPSH mWC	
	g) Type of gland sealing	
	h) Mode of connecting pump to motor	
	i) Direction of rotation	
	j) Impeller diameter (min, rated, max)	
	k) Type of end connection - Suction flange bore - Discharge flange bore - Drilling standard for flanges	
5	a) Type of shaft seal	
	b) In case of external water seal (required water pressure)	
6	Bearings	
	a) Type	
	b) Make	
	c) Quantity provided	
	d) Type of lubrication required	
7	Couplings	
	a) Type	
	b) Make	
	c) Coupling guard provided or not	
8	Base plate with holding down bolts and nuts provided or not	
9	Companion flanges at suction and delivery of pump included or not	
10	Weight	
	a) Pump	
	b) Base plate/motor stool	
	c) Accessories	
11	Materials of Construction of pump components (Indicate the applicable IS/BS/ASTM standard and grade)	
	a) Impeller	

© 2022 MECON Limited All rights reserved

Sl. No	DESCRIPTION	Data to be filled in by Tenderer
	b) Casing	
	c) Casing ring	
	d) Impeller ring	
	e) Shaft	
	f) Shaft sleeve	
	g) Gland	
	h) Base frame	
	i) Companion flanges	
	j) Column pipe	
	k) Suction strainer	
12	Drawings enclosed	
	a) GA drawing	
	b) Catalogue	
	c) Predicted performance curves	
	d) Speed vs torque curve for pump considering open valve operation	
	e) Speed vs torque curve for motor	

C. **VERTICAL TURBINE PUMP SETS** (To be furnished by the Tenderer separately for each group of pumps)

S.No	DESCRIPTION	Data to be filled in by Tenderer
1	No. of pumps	
2	Pump make & model no	
3	Pump operating characteristics	
i.)	Rated capacity of each pump (m3/hr)	
ii.)	Total dynamic head(tdh) at rated capacity (mWC)	
iii.)	Range of operation	
iv.)	SHUT OFF HEAD, (mWC)	
v.)	Speed (nominal) rpm	
vi.)	Pump efficiency at rated conditions (%)	
vii.)	Pump shaft power at rated capacity (kW)	
viii.)	Type of gland sealing	
ix.)	Mode of connecting pump to motor	
x.)	Direction of rotation	
xi.)	Impeller diameter (min / rated / max) mm	
xii.)	Input at rated capacity and head for pump, kW	
xiii.)	Power input to motor, kW	

© 2022 MECON Limited All rights reserved

S.No	DESCRIPTION	Data to be filled in by Tenderer
xiv.)	Motor input power at shut-off head, kW	
xv.)	Pump suitable for parallel operation	yes/ no
xvi.)	Motor power requirement due to overloading of pumps in the event of tripping of one pump in parallel operation, kW	
xvii.)	Designed flow for reverse flow through the pump, m^3/h	
xviii.)	Run-away speed of pump under reverse rotation, kW	
xix.)	Thrust bearing losses, kW	
xx.)	Transmission losses, kW	
xxi.)	Pump column losses at design capacity, kW	
xxii.)	Specific speed, metric units	
xxiii.)	No of stages	
xxiv.)	Minimum positive head required	
xxv.)	Diameter and thickness of discharge pipe	
xxvi.)	Total flooded length with strainer, mm	
xxvii.)	Impeller type and diameter	
xxviii.)	Impeller shaft diameter and type of joint	
xxix.)	Recommended crane hook height, mm	
xxx.)	Maximum length of single piece of column pipe, mm	
xxxi.)	Average velocity of water through column pipe, m/sec	
xxxii.)	Type of lubrication	
xxxiii.)	Type of non-reverse ratchet and its details	
xxxiv.)	Size of suction bowl, mm	
4	Type of end connection • Discharge flange bore mm : • Drilling standard for flanges	
5	Column length (mm)	
6	Type of shaft seal	
7	Bearings type : make :	
8	Quantity of bearing provided	
9	Type of lubrication required	
10	Couplings type	
11	Base frame with holding down bolts and nuts	
12	Companion flanges	
13	Drawings enclosed	
	a) GA drawing	

© 2022 MECON Limited All rights reserved

S.No	DESCRIPTION	Data to be filled in by Tenderer
	b) Catalogue	
	c) Predicted performance curves	
	d) Speed vs torque curve for pump considering open valve operation	
	e) Speed vs torque curve for motor	
13	**MATERIALS OF CONSTRUCTION**	
A	Impeller	
B	Casing	
C	Casing ring	
D	Line shaft	
E	Shaft sleeve	
F	Gland	
G	Base frame	
H	Companion flanges	
I	Column pipe	
J	Suction strainer	
K	Impeller lock nut	
L	Wearing rings	
M	Impeller shaft	
O	Line shaft bearings	
P	Weight a) Pump assembly, kg b) Motor, kg c) Total weight, kg	
Q	Noise limits, db at 1.6 m distance	

© 2022 MECON Limited All rights reserved

D MOTORS OF VERTICAL TURBINE PUMP SETS

S.No	DESCRIPTION	Data to be filled in by Tenderer
1	Make	
2	Rated kW at 50 ^{0}C	
3	Rated kW at 40 ^{0}C s1 duty (kW)	
4	Rated voltage & system conditions	
5	Frame size	
6	Class of insulation	
7	Rated speed & direction of rotation	
8	Fl current	
9	Operation at 75% rated voltage for 5 minutes	
10	No. of starts/hr (equally : spread) permissible	
11	Locked rotor torque	
12	Pull up torque	
13	Pull out torque	
14	Max winding temperature by resistance method	
15	Degree of protection of enclosure	

© 2022 MECON Limited All rights reserved

24.02 DIESEL ENGINE -

ENGINE DESIGN DATA		
No. of cylinder		
Model no.		
Rotation (facing flywheel) (CW/CCW)		
Configuration(Inline/Vee)		
Bore stroke (mm)		
No of cycles (2/4)		
Turbocharged/supercharged (Yes/ No)		.
No. of valves per cycle inlet/exhaust		
Displacement (litres)		
Intercooler / aftercooler (Yes/No)		
Av piston speed @ max speed (m/s)		
Combustion air flow @ max power(m^3/min)		
Engine speed max/ continuous(RPM)		
Compression ratio (mech/overall)		
Gross continuous engine output (kW)		
Max turbocharger speed (RPM)		
Deductions		
BMEP*(Kg/cm^2G)		
Jacket water pump(kW)		
Jacket/after cooler water pump flow (m^3/hr)		
After cooler water Pump (kW)		
Jacket water max outlet temp(ºC)		
Radiator fan (if direct)(kW)		
Exhaust temp. after cooler inlet/outlet(ºC)		
Other auxiliaries (kW)		
Exhaust manifold (Wet/Dry)		
Net cont engine output (kW)		
Max output 1 hr in 12(kW)		
Specific fuel consumption at loads (APP)(kW)		
100% : load	Lb/bhp/hr	
75% : load	Lb/bhp/hr	
50% : load	Lb/bhp/hr	
* BMLP-brake mean effective pressure SFC guaranteed at full load only with 5% prod tol.		

© 2022 MECON Limited All rights reserved

Governing type(Single/Multiple/All Speeds)	
Governing speed range	
Governing accuracy class	
Time establish controllability (Sec)	
Governor mfr/model	
Governor operation	
Pump power normal /max 9kW)	
Pump speed normal/max (RPM)* excluding gear losses	
HEAT REJECTION DATA	
To exhaust @ 100% load (kW)	
To atmosphere @ 100% load (kW)	
To cooling system @ 100% load (kW)	
To oil cooler @100% load (kW)	
LIQUID FUEL SYSTEM	
Filter configuration Simplex/duplex	
Filtration absolute particle size(um)	
Filter Mfr	
Normal/Max. Difference Pr.(Kg/cm^2G)	
Min. inlet press (Kg/cm^2G)	
Fuel Day tank by Vendor(Yes/No)	
Fuel pump(Engine/Motor drive)	
Fuel Tank Volume	
Fuel tank elevation (m)	
Fuel Tank Retention	
GAS FUEL SYSTEM	
Press regulator make/model	
Press before/after regulator (bar g)	
Gas valve make/model	
Temp before/after regulator(^0C)	
BASIC CONSTRUCITON	
Cylinders	
Removable	
Wet or dry	
Integral jacket	
Crank shaft	
Forged welded or cast	
Heat treated	
Conn rods	

© 2022 MECON Limited All rights reserved

Forged	
Heat treated	
Rifle drilled	
Articulated	
Valves	
No per cylinder	
Removable seats	
Lifters (hyd) (rollers)	
Compression release	
Pistons	
No oil rings	
No compr rings	
Cooling method	
Cam shaft	
Diameter	
Type of drive	
Fly Wheel	
Weight (Kg)	
Diameter(mm)	
Barring device (hand) (air)	
Frame (cast) (fabricated)	
Wrist pin (full float)	
MATERIALS	
Cylinder heads	
Pistons	
Crankshaft	
Frame	
Base	
Main-shell	
Crankpin	
Cylinder liner	
Connecting rings	
Cam shaft	
Valves	
Lube oil, tank	
Bearings	
WEIGHTS & DIMENSIONS	
Bare engine with flywheel	
Dry/operating weight(Kg)	
Length/width/height(mm)	

© 2022 MECON Limited All rights reserved

Min distance between engines(mm)	
Min height to remove pistons/rods(mm)	
Oil cooler	
Dry/operating weight (Kg)	
Length/width/height(mm)	
Max maintenance weights	
Item Weight(Kg) Item Weight(Kg) Item Weight(Kg) Item Weight(Kg)	
SITE CONDITIONS	
Altitude	
Ambient temp ^{0}C (Min/max)	
Air humidity % (Min/max)	
Back press (air cooler/radiator) (Kg/cm2)	
Electrical supply	
Motors (Hz)	
Heaters/chargers (Hz)	
Location (In/Outdoor/Roof/Walls)	
Fuel type(High Speed Diesel/Gas/Dual)	
Winterisation required(Yes/No)	
Fuel specification	
Fuel gross calorific value(kJ/kg) Winter temp(^{0}C)	
Cooling medium	
Equipment duty	
Continuous/Intermittent /Attended/Unattended	
Area class	
Temp class	
Gas group	
AIR INTAKE SYSTEM	
Filter manufacturer	
Blow in doors(Yes/No)	
Inlet Duct Size(mm)	
Air Intake Shut off Valve(Yes/No)	
Intake shut off Valve actuated	
Filtration	
Absolute particle size (Um)	
Filter type	

© 2022 MECON Limited All rights reserved

Diff press indicator(Yes/No.)	
LUBRICATION SYSTEM	
Main oil pump drive(Engine / Motor)	
Pump Drives Power(KW)	
Auxiliary pre lube oil pump(Yes/No)	
Engine sump capacity(m^3)	
Pump Mfr	
Oil press to engine, normal/min (PSI/Kg/cm^2G)	
Sump heater NO	
Heater rating (kW)	
Pump type/model	
Cooling(Water/Air Cooler/Direct Air)	
Cooler mfr	
Cooler in/outlet temp (ºC)	
Oil filter con figuration	
Full flow % flow/ Simplex/ Duplex	
Filter mfr(um)	
Filtration	
Absolute Particle Size	
Filter Element Type	
COOLING SYSTEM	
Jacket water cooler (Water/Water)	
Cooler configuration (Simplex /Duplex)	
Turbocharger aftercooler (Air/Water)	
Cooling system normal operating press(Kg/cm^2G)	
Circulating pump mfr	
Pump model/type	
Pump rated power (KW)	
Cooler mfr	Design code
Materials Shell	Tubes
Flow Shell	Tubes
MAWP Shell	Tubes
Test Pr. Shell	Tube
Water temp @inlet to jacket (^{0}C)	
Jacket water heater(Yes/No)	
Heater rating(kW)	
STARING SYSTEM	
Battery start (Yes/No)	

© 2022 MECON Limited All rights reserved

No of battery set(One/Two)	
Capacity per set(A/hours)	
Time to recharge (Hours)	
Battery charger(Alternator/and/Static)	
Recharging pump drive(Engine/Motor)	
Hydraulic start(Yes/No/Auxiliary)	
Air start (Yes/No)	
Start system(Air Motor/Direct Injection)	
Air receiver design press(Kg/cm2G)	
Air compressor mfr	
Compressor installed power(kW)	AT MINIMUM RECOMMENDED CRANKING SPEED
Air compressor drive (Engine/Motor/Aux. Engine)	
Air receiver capacity	
Air receiver design code (M3)	
No of starts	
Receiver operating press normal/min (Kg/cm^{2}G)	
EXHAUST SYSTEM	
Exhaust ducting system (Seller/Purchaser)	
Ducting layout refer sheet	
BARRING SYSTEM	
Type (Manual/Power Assisted)	
Air operated (Yes/No)	
Electrically operated (Yes/No)	
TESTS	
Inspection	
Witnessed performance test	
Certified brake data	
AUTO SHUT DOWN CONTROLS	
Lube oil failure	
Lube oil temp	
Water failure	
Water temp	
Overspeed	
REMARKS * Engine with heat exchanger cooling	

© 2022 MECON Limited All rights reserved

24.03 DATA SHEET FOR COOLING TOWER

DESCRIPTION	Data to be filled in by Tenderer
GENERAL	
Name of manufacturer	
Manufacturer's plant location	
Tower model no.	
Type of tower	
Number of cells	
Capacity per cell , m^3/hr	
TOWER OVERALL DIMENSION, m	
a) Length	
b) Width	
c) Height (to fan deck)	
DIMENSION OF EACH CELL, m	
♦ Length ♦ Width ♦ Filled height ♦ Louvre height and angle from horizontal	
BASIC PARAMETERS PER CELL	
Rated water flow, m^3/hr	
Design wet bulb temp., ^{0}C	
Approach, ^{0}C	
Cooling range at rated flow , ^{0}C	
Evaporation loss at rated condition, m^3/hr/cell	
Temp. of leaving air ♦ Dry bulb ♦ Wet bulb	
Total air area, m^2/cell (full plan area)	
Total louvred area, m^2/cell	
Dry air flow per m^2 of air area, (G) kg/h/m^2	
Water flow area, m^2/cell	
Water flow rate per m^2 of water area, (L), m^3/h/m^2	
TOWER FILL	
Material	
Type of treatment	
Expected life, years	
Type of flow,	
No. of full and partial decks	

© 2022 MECON Limited All rights reserved

DESCRIPTION	Data to be filled in by Tenderer
Equivalent fill decks	
Equivalent fill height, m	
Number, splash bars in direction of air flow (cross -flow)	
Size, splash bars, mm (nominal)	
Splash bar position	
Splash bar spacing ♦ Horizontal ♦ Vertical	
Fill stringer size, m	
Total fill volume, m^3/cell	
Wetted surface area, m^2/m^3	
Splash surface area, m^2/m^3	
Fill performance characteristics	
Total vertical water fall height, m	
Solidity ratio of fill, cross flow	
FILL SUPPORT AND GRIDS	
Type	
Material	
Size	
GRID SUPPORT FRAME	
Type	
Material	
Type of treatment, if any	
FAN	
Type and Make	
No. of fans / cell	
Diameter of fan, m	
No. of blades per fan	
Blade tip clearance, mm	
Hub diameter, m	
Net discharge area, m^2	
Blade width at ¾ radius, m	
Capacity, m^3/min per fan	
Speed , rpm	
Fan stack ♦ Height , m ♦ Type (std or velocity recovery) ♦ Stack exit air velocity, m/sec (based on NDA)	

© 2022 MECON Limited All rights reserved

DESCRIPTION	Data to be filled in by Tenderer
Air density at fan, kg/m^3 ♦ Dry air ♦ Mixture	
Fan pressure, mmWC ♦ Louvres ♦ Filling ♦ Eliminator ♦ Velocity head ♦ Total head ♦ Velocity recovery, if any ♦ Net head	
Fan efficiency., % ♦ Static ♦ Overall	
Brake power Kw at motor shaft	
Power at fan shaft, Kw per shaft	
Motor size, Kw	
Material of construction ♦ Blades ♦ Hub ♦ Fan shaft	
Type of connection with gearbox shaft	
REDUCING GEAR UNIT	
Make	
Type	
Model No	
Reduction ratio	
Rated input, Kw	
Service factor at design point	
Material of construction ♦ Gear ♦ Shaft ♦ Enclosure	
"No load loss" at gear box	
Gear box oil ♦ Type ♦ Trade name ♦ Approximate quantity of oil required in each box, m^3	
Details of bearing	
Efficiency	

© 2022 MECON Limited All rights reserved

DESCRIPTION	Data to be filled in by Tenderer
DRIVE SHAFT	
Diameter, m	
Approximate length, m	
Material of construction	
Type of coupling	
Type of support	
DRIVE MOTORS	
Make	
Voltage	
Phase	
Frequency	
Rated, Kw	
Shaft / pull out torque	
Full load current, Amp	
Starting current, Amp	
Efficiency	
Class of insulation	
Type of enclosure	
Degree of protection	
Recommended DOL	
Starting current	
Speed, rpm	
HOT WATER DISTRIBUTION SYSTEM	
Type	
Nozzle spacing	
Elevation, inlet above curb, m	
Water pressure required at battery limit	
No. of nozzles per cell	
COLD WATER BASIN	
Basin dimension, m (L X W)	
Basin curb elevation, m	
Normal water level, m	
Maxi. Water level, m	
Basin invert level, m	
Effective capacity, m^3	

VALVE DETAILS				
Make	Cell inlet water control valve	Header isolating valve	De-sludging valve	Other
Type				

© 2022 MECON Limited All rights reserved

DESCRIPTION			**Data to be filled in by Tenderer**	
Number & size				
Material of construction ♦ Body ♦ Trim				

MATERIAL OF CONSTRUCTION	
Structural member	
Casing and louvres	
Inner and outer casing	
Fan stack	
Distribution header	
Hardware	
MATERIAL HANDLING SERVICES	
Type	
Capacity	
Material of construction	
Protection against corrosion	

© 2022 MECON Limited All rights reserved

24.04. DATA SHEET FOR PLATE HEAT EXCHANGER

S. No.	Description	Unit	Data to be filled in by Tenderer	
1	General			
1.1	No. of Plate heat exchangers	Nos.		
1.2	Manufacturer			
1.3	Model No. / Type		Plate type	
1.4	Whether single or double pass		Single	
2	Design			
2.1	Design Pressure	Bar(g)		
2.2	Design Temperature	^{0} C		
2.3	Heat Load	Kcal/h		
2.4	LMTD(Corrected)	^{0} C		
3	Guaranteed performance for each heat exchanger		Primary Side(Soft Water)	Secondary side(Industrial water)
3.1	Flow rate	M^3/h		
3.2	Inlet Temperature	^{0} C		
3.3	Outlet temperature	^{0} C		
	a) In fouled conditions			
	b) In clean conditions			
3.4	Total Pressure drop across heat exchanger from inlet to outlet	Bar(g)		
	a) For design flow			
	b) For 110% of design flow rate			
4	Heat transfer and fluid flow data		Primary Side(Hot fluid)	Secondary side(Cold Fluid
4.1	Film heat transfer coefficient	Kcal / hr/M^2/ ^{0}C		
4.2	Fouling factor	M^2/hr ^{0}C / Kcal		
4.3	Overall fouling	M^2/hr ^{0}C / Kcal		
4.4	Overall heat transfer coefficient	Kcal / hr/M^2/ ^{0}C		
	a) In fouled conditions			
	b) In clean conditions			

© 2022 MECON Limited All rights reserved

S. No.	Description	Unit	Data to be filled in by Tenderer	
4.5	Total Effective heat transfer area per heat exchanger	M^2		
4.6	Average velocity	m/s		
	a) Through ports			
	b)Through plate channels			
4.7	Pressure drop in ports	Bar(g)		
	a) In clean conditions			
	b) In fouled conditions			
4.8	Pressure drop in channels	Bar(g)		
	a) In clean conditions			
	b) In fouled conditions			
4.9	Maximum differential pressure between hot and cold fluids in plate channels(Operating)	Bar(g)		
5	Heat transfer Plates			
5.1	Area of each plate	m^2		
5.2	Dimension(Width x height)	mm x mm		
5.3	Thickness	mm		
5.4	Material and chemical composition		AISI 316	
5.5	Number of plates per heat exchanger	Nos		
5.6	Maximum number of plates that can be accommodated in the heat exchanger frame	Nos		
5.7	Type of corrugation		Herringbone	
5.8	Maximum plate pack length	mm		
	a) as per 5.5 above			
	b) As per 5.6 above			
5.9	Average spacing between two plates	mm		
5.10	Number of contact points for each plate	Nos		
5.11	Hold up volume of each passage	M3		
5.12	Port Size(Diameter)	mm		
6	Plate Gaskets			
6.1	Type		Glued	
6.2	Material and chemical composition		Nitrile Rubber	
6.3	Thickness of gasket	mm	5	
6.4	Hardness of gasket		72 + 5 deg.	

© 2022 MECON Limited All rights reserved

S. No.	Description	Unit	Data to be filled in by Tenderer	
6.5	Expected life of gasket	Years	5	
7	Carrying bar			
7.1	Type of construction		Stdd. I section beam	
7.2	Number per heat exchanger	Nos		
7.3	Size			
7.4	Material		CS IS:2062 with SS Cladding	
8	Guide bar			
8.1	Type of construction		Stdd. I section beam	
8.2	Number per heat exchanger	Nos		
8.3	Size			
8.4	Material		CS IS 2062	
9	Frame plate			
9.1	Type of construction		Fabricated - profile cut	
9.2	Material		CS IS:2062	
10	Pressure plate			
10.1	Type of construction		Fabricated - profile cut	
10.2	Material		CS IS:2062	
11	Supporting columns			
11.1	Type of construction		Stdd. I section beam	
11.2	Material		CS IS:2062 GR B	
12	Clamping / Gasket compression arrangement			
12.1	Type of arrangement		Tie rod type	
12.2	Bolt size and material		ASTM 193 B7	
12.3	Nuts size and material		ASTM 194 2H	
13	Inlet and outlet nozzles		Primary Side(Hot fluid)	Secondary side(Cold Fluid
13.1	Size	mm		
13.2	Rating		150 Class	150 Class
13.3	Facing and drilling standard		Weld neck RF	ANSI B 16.5
13.4	Flange material		ASTM 105	
13.5	Are all nozzles counter flanges, bolts, nuts and gaskets etc. included in the offer		Yes(Studded end connections)	
14	Cleaning frequency of the heat	months		

© 2022 MECON Limited All rights reserved

S. No.	Description	Unit	Data to be filled in by Tenderer
	exchanger for assumed fouling factor		
15	Is backwash necessary		NO
16	Are all auxiliaries and accessories included in the offer		YES / NO
17	Local temperature indicators		
17.1	Manufacturer & Type		
17.2	Number per heat exchanger	Nos	
17.3	Dial size	mm	
17.4	Range		
17.5	Accuracy		
17.6	Material of construction		
18	Local Pressure gauges		
18.1	Manufacturer & Type		
18.2	Number per heat exchanger	Nos	
18.3	Dial size	mm	
18.4	Range		
18.5	Accuracy		
18.6	Material of construction		
19	Differential pressure gauges		
19.1	Manufacturer & Type		
19.2	Number per heat exchanger	Nos	
19.3	Dial size	mm	
19.4	Range		
19.5	Accuracy		
19.6	Material of construction		
20	Relief and other valves(If applicable)		
20.1	Location		
20.2	Type and size		
20.3	End details		
20.4	Materials		
	a) Body		
	b) Trim		
20.5	Pressure rating		
20.6	Number per heat exchanger	Nos	
20.7	Manufacturer		
21	Are all counter flanges, bolts, nuts		Yes(Studded end

© 2022 MECON Limited All rights reserved

S. No.	Description	Unit	Data to be filled in by Tenderer
	and gaskets etc. for all terminal points included in the offer		connections)
22	Are all heat exchangers supplied with necessary foundation plates, anchor, bolts, sleeves, inserts, lifting lugs etc., as specified		Yes
23	Shot tests & Inspection		
23.1	Whether all tests and inspections as detailed in specification / quality plan will be carried out		All standard tests will be carried out
23.2	Hydrostatic test		
	a) Test Pressure	bar(g)	15
	b) Test duration	min.	20
23.3	Are all plates checked for cracks and other defects by penetration method? If not, what percentage is checked		10 % Dye penetrant test
23.4	Whether hardness test will be conducted for plate gaskets		Test reports of sub vendors will be provided
24	Details of painting		
24.1	Exterior surface		YES
	a) Surface preparation		
	b) Primer		
	c) Finish Preparation		
24.2	Interior surface		
	a) Surface preparation		
	b) Primer		
	c) Finish Preparation		
25	Weight of each heat exchanger	Kg	
	a) Empty		
	b) Flooded		
26	Overall Dimensions		
	Length x breadth x height	mm x mm x mm	
27	Withdrawal space		min. 1 m from all sides
28	Other information (If any)		

© 2022 MECON Limited All rights reserved

24.05. DATA SHEET FOR SOFT WATER PLANT

A Pressure Filter & Activated Carbon Filter

Sl. No.	Description	To be filled in by tenderer	
		Pressure Filter	A C F
1.	Shell dimension: diameter and length, mm		
2.	Vessel design code adopted		
3.	Design pressure, kg/cm^2		
4.	Hydro-test pressure, kg/cm^2		
5.	Guaranteed output between two successive backwash		
6.	Guaranteed effluent quality		
7.	Flow rate, m^3/h		
	Normal		
	Maximum		
	Backwash		
	Rinse		
8.	Head loss through bed, mWC		
	Normal		
	Maximum		
	Backwash		
	Rinse		
9.	Filter Materials		
	Type		
	Size of grading, mm		
	Quantity per filter, m^3		
	Life of filtering material year		
10.	Bed depth and free board provided		
11.	Time required for backwash		
12.	Time required for rinse Minimum		
13.	Material of construction of vessel		
14.	Type and material of inlet distributor and under drain system		
15.	Material and detail of nozzle		
16.	Filter shell and dished End thickness, mm		
17.	Flooded weight, kg		
18.	Empty weight, kg		

© 2022 MECON Limited All rights reserved

Sl. No.	Description	To be filled in by tenderer	
		Pressure Filter	A C F
19.	Compressed air requirement and pressure		
20.	Time of air scouring in min.		

B **Base Exchangers**

Sl. No.	Description	To be filled in by Tenderer
1	Nos. offered	
2	Shell Dimension dia x ht	
3	Design pressure, kg/cm^2	
4	Vessel design code adopted	
5	Thickness of a) Dished end b) Shell	
6	Regeneration Cycle	
7	Guaranteed output between two successive regenerations (12 hr cycle)	
8	Flow rate, m^3/h	
	Normal	
	Maximum	
	Backwash	
	Regeneration	
	Slow Rinse	
	Fast Rinse	
9	Head loss through bed, mWC	
	Normal	
	Maximum	
	Backwash	
	Regeneration	
	Slow Rinse	
	Fast Rinse	
10	Time required for regeneration	
	Back wash	
	Salt Injection	
	Slow Rinse	
	Fast Rinse	
	Total time	

© 2022 MECON Limited All rights reserved

Sl. No.	Description	To be filled in by Tenderer
11	Type of resin	
12	Make of resin	
13	Volume of resin	
14	Depth of resin bed	
15	Free board provided	
16	Guaranteed life of resin	
17	Expected rate of deterioration of resin per year	
18	Regeneration level by 100% NaCl per m^3 of resin	
19	Exchange capacity of resin for above regeneration level	
20	Guaranteed quality of out-let water (a) total hardness as $CaC0_3$ ppm (b) pH	
21	Quality of 100% NaCl required per regeneration Kg	
22	Type and material of inlet regeneration, distributor and under drain system	

C **<u>Blowers</u>**

Sl. No.	Description	For filter	For degasser tower
1.	Nos offered		
2.	Make		
3.	Capacity, m^3/min		
4.	Total head, mWC		
5.	Rpm of blower		
6.	kW of motor		
7.	Rpm of motor		
8.	Type of coupling		
9.	Size of suction/ discharge, mm		
10.	Make of motor		
11.	Material of construction		
12.	Total weight, kg		

© 2022 MECON Limited All rights reserved

D Brine measuring tank / brine saturator

Sl. No.	Description	To be filled in by Tenderer
1	Capacity	
2	Size	
3	Material of construction	
4	Thickness of plate	
5	Thickness of lining	

E Low Voltage Cage Motors

General Purpose Continuous Duty

Sl. No.	Description		To be filled in by Tenderer
1.	List of deviation from specification, if any,	:	
2.	Make type	:	
3.	Rated Kw at 40^0C, S1 duty	:	
4.	Rated kW at specified ambient	:	
5.	Rated voltage & system condition	:	415 + 10% 50 Hz, + 5% (combined variation 10%) 50 kA fault level
6.	Frame size	:	
7.	Class of insulation	:	
8.	Rated speed & direction of rotation	:	
9.	Rated current	:	
10.	Starting current	:	
11.	Operation at 80% rated voltage for 5 minutes	:	Suitable/ not suitable
12.	Operation at 150% rated current for 2 minutes	:	Suitable/ not suitable
13.	No. of starts/hr (equally spread) permissible, from cold condition	:	
14.	No. of starts in quick succession from cold condition from hot condition	 : :	
15.	Located rotor withstand time at 110% rated voltage	:	
16.	Located rotor torque	:	
17.	Pull up torque	:	
18.	Break down torque	:	
19	Max. permissible GD^2 of load	:	
20.	Nema Classification for speed-torque characteristics	:	
21.	Max. winding temperature by resistance method	:	
22.	Type of construction	:	

© 2022 MECON Limited All rights reserved

Sl. No.	Description	To be filled in by Tenderer
23.	Whether casing feet is integral with the frame :	
24.	Degree of protection of enclosure :	
25.	Material of stator frame :	
26.	Number and size of aluminum cables that can be terminated :	
27.	Earthing sound provided inside terminal box :	
28.	Detail of thermal protection :	

24.06 DATA SHEET FOR DM PLANT

A Activated Carbon Filter & PSF

Sl. No.	Description	To be filled in by Tenderer
1.	Shell dimension: diameter and length, mm	
2.	Vessel design code adopted	
3.	Design pressure, kg/cm^2	
4.	Hydro-test pressure, kg/cm^2	
5.	Guaranteed output between two successive backwash	
6.	Guaranteed effluent quality	
7.	Flow rate, m^3/h	
	Normal	
	Maximum	
	Backwash	
	Rinse	
8.	Head loss through bed, mWC	
	Normal	
	Maximum	

© 2022 MECON Limited All rights reserved

Sl. No.	Description	To be filled in by Tenderer
	Backwash	
	Rinse	
9.	Filter Materials	
	Type	
	Size of grading, mm	
	Quantity per filter, m^3	
	Life of filtering material year	
10.	Bed depth and free board provided	
11.	Time required for backwash	
12.	Time required for rinse Minimum	
13.	Material of construction of vessel	
14.	Type and material of inlet distributor and under drain system	
15.	Material and detail of nozzle	
16.	Filter shell and dished End thickness, mm	
17.	Flooded weight, kg	
18.	Empty weight, kg	
19.	Compressed air requirement and pressure	
20.	Time of air scouring in min.	

© 2022 MECON Limited All rights reserved

B **Cation Exchanger**

Sl. No.	Description	To be filled in by Tenderer
1.	Shell dimensions: diameter x overall height, mm	
2.	Lining material and thickness	
3.	Vessel design code adopted	
4.	Design pressure, kg/cm^2	
5.	Hydro-test pressure, kg/cm^2	
6.	Thickness of shell and dished end, mm	
7.	Guaranteed output between two successive regeneration, m^3	
8.	Flow rate, m^3/h	
	Normal	
	Maximum	
	Backwash	
	Regeneration	
	Slow rinse	
	Fast rinse	
9.	Head loss through resin bed, mWC	
	Normal	
	Maximum	
	Backwash	
	Acid injection/ Brine injection	
	Slow rinse	
	Fast rinse	

© 2022 MECON Limited All rights reserved

Sl. No.	Description	To be filled in by Tenderer
10.	Time required for regeneration in minutes	
	Backwash	
	Acid injection	
	Slow rinse	
	Fast rinse	
	Total time	
11.	Type and make of resin	
12.	Depth of resin bed and free board provided, m	
13.	Volume of resin/exchanger, in litres	
14.	Guaranteed life in years and rate of deterioration of resin per year	
15.	Regeneration level kg of 100% HCL per m^3 of resin	
16.	Exchange capacity Kg of cation (as $CaCO_3$)/m^3 of resin	
17.	Net exchange capacity (as $CaCO_3$)/m^3 of resin after derating	
18.	Quantity of HCL required for each regeneration, kg	
19.	Strength of acid during injection	
20.	Dilution water required per regeneration, m^3	
21.	Effluent quantity per regeneration, m^3	
22.	Flooded weight, kg	
23.	Empty weight, kg	

© 2022 MECON Limited All rights reserved

C **Anion Exchanger**

Sl. No.	Description	To be filled up by Tenderer
1.	Shell dimensions: diameter x overall height mm	
2.	Lining material and thickness	
3.	Vessel design code adopted	
4.	Design pressure, kg/cm^2	
5.	Hydro-test pressure, kg/cm^2	
6.	Thickness of shell and dished end, mm	
7.	Guaranteed output between two successive regeneration, m^3	
8.	Flow rate, m^3/h	
	Normal	
	Maximum	
	Backwash	
	Regeneration	
	Slow rinse	
	Fast rinse	
9.	Head loss through resin bed, mWC	
	Normal	
	Maximum	
	Backwash	
	Alkali injection	
	Slow rinse	
	Fast rinse	

© 2022 MECON Limited All rights reserved

Sl. No.	Description	To be filled up by Tenderer
10.	Time required for regeneration in minutes	
	Backwash	
	Alkali injection	
	Slow rinse	
	Fast rinse	
	Total time	
11.	Type and make of resin	
12.	Depth of resin bed and free board provided, m	
13.	Volume of resin/exchanger in litres	
14.	Guaranteed life in years and rate of deterioration of resin per year	
15.	Regeneration level kg of 100% NaOH/m^3 of resin	
16.	Exchange capacity of resin kg of anion (as $CaCO_3$)/m^3 of resin	
17.	Net exchange capacity (as $CaCO_3$)/m3 of resin after derating	
18.	Quantity of 100% NaOH required for each regeneration kg	
19.	Strength of alkali during injection	
20.	Dilution water required per regeneration, m^3	
21.	Effluent quantity per regeneration, m^3	
22.	Flooded Wt, Kg	
23.	Empty Wt, Kg	

© 2022 MECON Limited All rights reserved

D **Mixed Bed Exchanger**

Sl. No.	Description	To be filled up by Tenderer
1.	Shell dimensions: diameter x overall height, mm	
2.	Lining material and thickness	
3.	Vessel design code adopted	
4.	Design pressure, kg/cm^2	
5.	Hydro test pressure, kg/cm^2	
6.	Thickness of shell and dished end, mm	
7.	Guaranteed output between two successive regeneration, m^3 (280 hour cycle)	
8.	Flow rate, m^3/h	
9.	Head loss through resin bed, mWC	
10.	Time required for regeneration in minutes	
11.	Compressed air requirement per regeneration and pressure	
12.	Type and make of resin	
13.	Depth of resin bed and free board provided, m	
14.	Guaranteed life in years and rate of deterioration of resin per year	
15.	Regeneration level kg of 100% NaOH/m^3 of resin kg of 100% HCL/ m^3 of resin	
16.	Volume of resin exchanger Cation resin, m^3/litre	

© 2022 MECON Limited All rights reserved

Sl. No.	Description	To be filled up by Tenderer
	Anion resin, m^3/litre	
17.	Exchange capacity of resin kg of cation (as $CaCO_3$)/m^3 of resin kg of anion (as $CaCO_3$)/m^3 of resin	
18.	Quantity of regenerant 100% HCL required per regeneration, kg 100% NaOH required per regeneration, kg	
19.	Strength of regenerant Strength of acid during injection Strength of alkali during injection	
20.	Dilution water required per regeneration, m^3	
21.	Effluent quantity per regeneration, m^3	
22.	Flooded Wt, Kg	
23.	Empty Wt, Kg	

E **<u>Degasser Tower</u>**

Sl. No.	Description	To be filled up by Tenderer
1.	Shell dimensions: diameter x overall height, mm	
2.	Lining material and thickness	
3.	Vessel design code adopted	
4.	Design pressure, kg/cm^2	
5.	Hydro test pressure, kg/cm^2	

© 2022 MECON Limited All rights reserved

Sl. No.	Description	To be filled up by Tenderer
6.	Thickness of shell and dished end, mm	
7.	Type of Fill	

F **Storage tanks**

Sl. No.	Description	Filtered water	Degassed water	DM Water	Acid	Alkali
1.	Nos. offered					
2.	Chemical to be stored					
3.	Type of tank					
4.	Nominal capacity, m^3					
5.	Diameter, mm					
6.	Height/ length, mm					
7.	Material of construction					
8.	Internal surface protection					
9.	Thk.of shell & dished ends, mm					

G **Measuring Tanks**

Sl. No.	Description	Acid measuring tanks		
		SAC	MB	Neut. pit
1.	Nos. offered			

© 2022 MECON Limited All rights reserved

2.	Chemical to be stored			
3.	Nominal Capacity, litres			
4.	Diameter, mm			
5.	Depth, mm			
6.	Material of construction			
7.	Internal surface protection			
8.	Agitator - kw (estimated) - rpm			

Sl. No.	Description	Alkali measuring tanks		
		SBA	MB	Neut. pit
1.	Nos. offered			
2.	Chemical to be stored			
3.	Nominal Capacity, litres			
4.	Diameter, mm			
5.	Depth, mm			
6.	Material of construction			
7.	Internal surface protection			
8.	Agitator - kw (estimated) - rpm			

H **<u>Dosing Pumps, (if provided)</u>**

© 2022 MECON Limited All rights reserved

Sl. No.	Description	Acid dosing pumps	Alkali dosing pumps
1.	Nos. offered		
2.	Type		
3.	Capacity, m^3/h		
4.	Discharge head, mLC		
5.	Material of construction Casing Impeller Motor – hp, - rpm		

mLC - Meter of liquid column.

I **Blowers**

Sl. No.	Description	For filter (If reqd.)	For degasser tower	For Mixed bed Exchanger & Neut. pit
1.	Nos offered			
2.	Make			
3.	Capacity, m^3/min			
4.	Total head, mWC			
5.	Rpm of blower			
6.	kW of motor			
7.	Rpm of motor			
8.	Type of coupling			
9.	Size of suction/ discharge, mm			

© 2022 MECON Limited All rights reserved

10.	Make of motor			
11.	Material of construction			
12.	Total weight, kg			

J Pumpsets

Sl. No.	Description	Feed pump to DM Plant	Degassed water pumps	DM water transfer pumps	DM water Regeneration pumps
1.	Nos offered				
2.	Make				
3.	Size of suction/ discharge, mm				
4.	Capacity, m^3/h				
5.	Total head, mWC				
6.	Speed, rpm				
7.	Efficiency at duty point				
8.	Power requirement at duty point				
9.	Material of construction				
10.	Details of stuffing box/ mech seal				
11.	Type of coupling				
12.	Whether coupling guard provided or not				

© 2022 MECON Limited All rights reserved

Sl. No.	Description	Feed pump to DM Plant	Degassed water pumps	DM water transfer pumps	DM water Regeneration pumps
13.	Base plate material				
14.	Motor make				
15.	Speed, rpm				
16.	Rated output, kW				
17.	Starting torque				
18.	Pull out torque				
19.	Frame size				
20.	Degree of protection				
21.	Type of enclosure				
22.	Class of insulation				
23.	Total weight, kg				

Pumpsets (Contd….)

Sl. No.	Description	Acid transfer pumps	Alkali transfer pumps	Effluent transfer pumps
1.	Nos offered			
2.	Make			
3.	Size of suction/ discharge, mm			
4.	Capacity, m^3/h			
5.	Total head, mWC			

© 2022 MECON Limited All rights reserved

Sl. No.	Description	Acid transfer pumps	Alkali transfer pumps	Effluent transfer pumps
6.	Speed, rpm			
7.	Efficiency at duty point			
8.	Power requirement at duty point			
9.	Material of construction			
10.	Details of stuffing box/ mech. seal			
11.	Type of coupling			
12.	Whether coupling guard provided or not			
13.	Base plate material			
14.	Motor make			
15.	Speed, rpm			
16.	Rated output, kW			
17.	Starting torque			
18.	Pull out torque			
19.	Frame size			
20.	Degree of protection			
21.	Type of enclosure			
22.	Class of insulation			
23.	Total weight, kg			

© 2022 MECON Limited All rights reserved

K **Regeneration Flow**

Sl. No.	Description	Basis	Flowrate (m3/h)	Duration (min.)	Volume (m3)	Source
	DM WATER PLANT					
	Cation Exchanger					
1.	Backwash					
2.	Acid injection					
3.	Rinse					
	Anion Exchanger					
1.	Backwash					
2.	Alkali injection					
3.	Rinse					
	Mixed Bed Exchanger					
1.	Sub-surface wash					
2.	Backwash					
3.	Acid injection					
4.	Acid Rinse buffer during 3 & 4					
5.	Alkali injection					
6.	Alkali Rinse buffer during 5 & 6					
7.	Drain down					
8.	Air mix					
9.	Final Rinse					

© 2022 MECON Limited All rights reserved

L **Process calculation summary**

Sl. No.	Parameters	Units	DM Water Plant			
			Cation	Anion	MB cation	MB Anion
1.	Exchangeable Ionic load	ppm				
2.	Flowrates normal /maximum	m^3/h				
3.	Exhaustion time	hrs				
4.	Net output per cycle	m^3				
5.	Regn. Water-downstream unit	m^3				
6.	Regn. water - self	m^3				
7.	Gross output per cycle	m^3				
8.	Resin type	-				
9.	Regn. level (as 100%)	kg/m^3				
10.	Exchange capacity	kg/m^3				
11.	Derated capacity	kg/m^3				
12.	Net Exch. Cap. used	kg/m^3				
13.	Leakage	kg/m^3				
14.	Resin Volume (active)	m^3				
15.	Cross sectional area	m^2				

© 2022 MECON Limited All rights reserved

Sl. No.	Parameters	Units	DM Water Plant			
			Cation	Anion	MB cation	MB Anion
16.	Inert resin volume	m^3				
17.	Total resin quantity	m3				
18.	Total bed depth	mm				
19.	Dia and Height on straight	mm				
20.	Surface flow rate	m/hr				
21.	Specific flow rate	BF/h				
22.	Chem. per regn. (as 100%)	kg				
23.	Work done by resin (as $CaCO_3$)	kg				
24.	Regeneration efficiency	%				
25.	Excess regenerants (as $CaCO_3$)	kg				
26.	100% chemical required for neutralisation	kg as $CaCO_3$				
27.	Composition of effluent	ppm				

© 2022 MECON Limited All rights reserved

24.07 DATA SHEET FOR OIL SKIMMER

1.	Required nos.	
2.	Place of Installation	Each Compartment of Scale Pit and Secondary Settling Tank
3.	Type	Floating Tube Endless Type with Cantilever Boom Arrangement
4.	Mounting	Cantilever type extended swivel arm
5.	Capacity, LPH	
6.	Type of Operation	Continuous
7.	Fluid to be skimmed	Oil and grease
8.	Temperature, ^{0}C	60
9.	Flow Rate, m^3/hr	
10.	Specific Gravity	
11.	Viscosity, centistokes	
12.	Oil and Grease Loading, mg/1	
13.	Oil Film Thickness, mm	
14.	Tube Length, m	
15.	Tube Speed, m/min	
16.	Pulley speed, RPM	
17.	Direction of Rotation	
18.	MATERIAL OF CONSTRUCTION	
	• Frame	MS Fabricated and Epoxy Painted
	• Tube	Special Polymer with diameter of 25mm and thickness of 3 mm

© 2022 MECON Limited All rights reserved

	• Shaft	Stainless Steel
	• Wiper	Space age high resistant ceramic
	• Bonnet	Aluminum cover
19.	Accessories	Outlet Hose for oil transfer to collecting drum and it is to be provided by the vender

24.08 DATA SHEET FOR FILTER

A. Simplex Filter

Sl. No.	Description	Parameters
1.	Flow, m^3/hr	
2.	Inlet Pressure, Kg/cm^2	
3.	Line Size	
4.	Sieve Size, micron	
5.	Operation	Simplex type
6.	Qty.	

B. Duplex Filter

Sl. No.	Description	Parameters
1.	No. of filters installed	
2.	Place of installation	
3.	Inlet nozzle	
4.	Outlet nozzle	
5.	Type of filter	Duplex basket filters with manual drive
6.	Flow (m^3/h)	

© 2022 MECON Limited All rights reserved

Sl. No.	Description	Parameters
	- Maximum	
	- Normal	
7.	Temperature of water(^{0}C)	60 (max.)
8.	Pressure (kg/cm^2)	
	- Maximum	
	- Normal	
	- Test	
9.	Degree of filtration	500 microns
10.	Filter element	3 mm thick sheet with 5mm dia holes enclosed with 20 mesh 37 SWG wire mesh with suitable stiffeners on circular and longitudinal direction.
11.	Ratio of free flow area to nozzle area	6 : 1
12.	Pressure loss (kg/cm^2) at maximum flow	a) Clean condition - Not more than 0.1 kg/cm^2. b) 50% clogged condition - Not more than 0.5 kg/cm^2.
13.	Differential Pressure Gauge	1 no. per filter
14.	Drain with valves (Plug type valves)	2 Nos. per filter , size – 25 NB
15.	Vent with valves	2 nos. per filter of size 15 mm dia.
16.	Pressure equalising arrangement with plug type valve	1 no. per filter , size – 25 NB
17.	Materials of construction (main components)	
18	Body	Carbon Steel as per IS 2062 : 1992 Grade B
19	Filter element (including	SS 304

© 2022 MECON Limited All rights reserved

Sl. No.	Description	Parameters
	handle) & wire Mesh.	
20	Inspection hole covers, Drain covers, Top & bottom covers.	Carbon Steel as per IS 2062 : 1992 Grade B
21	Spindles	EN 8
22	Valve disc	IS:210-1978 (reaffirmed in 1990) FG 300/or M.S.
23	Valve seating	IS:318-1981 (reaffirmed in 1991) LTB-2 Gr.2
24	Gaskets sealing rings	CAF
25	Companion flanges at inlet and outlet	IS:6392/1971, Table-17 (RA88)

C Y - Strainer

Material Of Construction

BODY : CS – A216 Gr WCB

MESH : SS 304

GASKET : CAF

BODY COVER : A216 Gr WCB

Pressure loss (kg/cm^2) at

maximum flow

a) Clean condition - Not more than 0.1 kg/cm^2.

b) 50% clogged condition - Not more than 0.15 kg/cm^2

Size of drain along with plug valve: 20 NB

© 2022 MECON Limited All rights reserved

D **Automatic backwash filter**

Sl. No.	Description	Parameters
1.	Flow, m3/hr	
2.	Inlet Pressure, Kg/cm2	
3.	Line Size	
4.	Sieve Size, micron	
5.	Operation	Automatic backwash Self cleaning Filter
6.	Degree of filtration	200 microns
7.	Qty.	

24.09 DATA SHEETS FOR VARIOUS EQUIPMENT OF TREATMENT PLANT:

24.09.01 DATA SHEET FOR FLASH MIXER:

- Nos. offered :
- Design flow rate :
- Detention time :
- Size of flash mixing tank :
- Material of construction of tank :
- Type and details of mixer mechanism :
- Material of construction of mixer :
- Ratio of impeller diameter to tank diameter :

- Rotational speed of impeller :
- Velocity gradient :
- Details of drive :
- Rated kW of motor :
- Motor rpm :

24.09.02 DATA SHEET FOR CLARIFLOCCULATOR

- Design Flow (m^3/h) :
- Assumed underflow losses :
- Design Inflow (m^3/h) :
  of influent raw water (ppm) :

© 2022 MECON Limited All rights reserved

- Maxm. suspended solid content of effluent clarified water (ppm) :

- Sedimentation velocity :
- Retention time
  a) Flash mixer zone (minutes) :

  b) Flocculator zone (minutes) :

  c) Clarifier zone (minutes) :

- Design Sedimentation Area (m^2) :
- Quantity of media required (m^2) :
- Required plan area of each clarifier (m^2) :

- Surface loading rate (SLR)
  a) Normal ($m^3/m^2/h$) :

  b) Maximum ($m^3/m^2/h$) :

- Surface area of each clarifier(m^2) :
- Overall dimension of each clarifier
  a) Dia (m) :

  b) Height (m) :

  :

- Sludge Zone Volume :
- Sludge bleed off system : Intermittent/Continuous
- Sludge consistency :
- Sludge retention time (min) :
- Weight of assembly :
- GA drawing submitted :

24.09.03 DATA SHEET FOR CHEMICAL SOLUTION PREPARATION-CUM- DOSING TANKS

- Nos. offered :
- Chemical to be handled :
- Nominal capacity :
- Dimensions of tank :
- Material of construction & thickness :
- Interior surface protection :
- Mixer/Stirrer Mechanism
  i) Number :

© 2022 MECON Limited All rights reserved

ii) Manufacturer :

iii)Speed (rpm) :

- Material of construction of
  i) Propeller/agitator :

  ii) Shaft :

  iii)Fixing bracket :

- Drive details :
- Rated kW of drive :

Note : Separate data sheet shall be furnished for each type of the above tanks.

24.09.04 DATA SHEET FOR METERING PUMPS

- Nos. offered :
- Type, make :
- Capacity (lph) :
- Discharge head :
- Material of construction of

i) Casing :

ii) Impeller :

- Drive details :
- RPM :
- Rated kW of motor :

(Note : Separate data sheets shall be furnished for each type of the above pumps)

24.09.05 DATA SHEET FOR PRESSURE FILTER

- Type :
- Nos. offered :
- Design flow rate
  i) Normal (m^3/h) :

  ii) Maximum (m^3/h) :

  iii)Back wash :

  iv) Rinse :

© 2022 MECON Limited All rights reserved

- Quality of influent water :
  i) Total suspended solids (ppm) :

  ii) pH :

- Guaranteed effluent quality
  i) Total suspended solids (ppm) :

  ii) Micron size :

  iii)pH :

- Filtration rate ($m^3/h^2/h$) :
- Vessel dimensions
  i) Shell diameter (mm) :

  ii) Straight length (mm) :

  iii)Overall length (mm) :

- Plate specification and thickness
  i) Shell :

  ii) Dished end :

- Vessel design code :
- Design pressure (Kg/cm^2) :
- Test pressure (Kg/cm^2) :
- Filtration area :
- Filter media
  i) Type :

  ii) Effective size (mm) :

  iii)Volume per filter(m^3) :

  iv) Life of filtering media :

- Media depth (mm) :
- Free board (mm) :
- Type & MOC of inlet distributor :
- Type & MOC of under drain collection system :
- Back-wash cycle period :
- Guaranteed output between
  two successive backwash (m^3) :

- Duration of air scour (minutes) :
- Specific consumption of scour

© 2022 MECON Limited All rights reserved

air ($m^3/h^2/h$) :

- Pressure of backwash water (mWC) :

- Quantity of backwash water
  a) Flow rate (m^3/h) :

  b) Total consumption (m^3) :

- Quality of backwash water :
- Time required for backwash (minutes) :

- Time required for rinse (minutes) :
- Arrangement of disposal of waste wash water :

- Empty weight of filter (kg) :
- Flooded weight of filter (kg) :
- Details of dosing system required for
  i) When influent water is received from

  inclined plate clarifier :

  ii) When influent water is received

  directly from the raw water reservoir :

24.09.06 DATA SHEET FOR AIR BLOWERS

- No. of blowers :
- Type & make :
- Capacity (m^3/h) :
- Total pressure (mmwg) :
- Speed (rpm) :
- Efficiency :
- Drive details :
- Material of construction
  a) Impeller :

  b) Casing :

  c) Shaft :

  d) Gears :

  e) Suction filter :

© 2022 MECON Limited All rights reserved

f) Silencer (suction/discharge side) :

24.09.07 SLUDGE AGITATOR DATA SHEET

- Nos. offered :
- Type and make :
- Design considerations
  - i) Slurry viscosity (CP) :
  - ii) Max. solid size (mm) :
  - iii)Max. dry solids sp. gravity :
  - iv) Max. liquor sp. gravity :
  - v) Max. solids content (by weight) :
- No. of propellers :
- Propeller diameter :
- No. of blades :
- Tip speed
- Power (kW) at tip speed :
- Weight (kg) :
- Details of agitator features :
- Details of drive system :
- Material of construction for
  - i) Propeller blades :
  - ii) Propeller shaft :
  - iii)Gear box housing :
  - iv) Output shaft :
  - v) Bearing (upper/lower) :
  - vi) Bearing housing :
- Details of gear reducer :
- Details of V-belt drive :
- Details of electric motor :
  - i) Rated kW of motor :
  - ii) RPM of motor :

© 2022 MECON Limited All rights reserved

- Details of super structure :
- Weight of super structure :
- Details of tank fittings :

24.09.08 DEWATERING STATION DATA SHEET

- Type of filter press : horizontal/vertical
- Quantity : 2 no.
- Operating temperature : 60 to 70 °C
- Capacity : by tenderer
- Solid content : -
- Cake Solid content :
- Flammable conditions : none
- Area classification : safe
- Service pressure :

CONSTRUCTION FEATURES

- Cake holing capacity :
- Type of operation : fully automatic
- Filtration cycle time : one hour
- Plate size :
- Filtration area in m^2 :
- Piping battery limit connection : welded
- Maximum design temperature :
- Cake thickness :
- Design service pressure :
- Feed inlet pipe size :
- Filter outlet :
- Plate movement : cam
- Drive for movement : hydraulic motor
- Filter cloth size :
- Filter plate type :
- Plate thickness :

© 2022 MECON Limited All rights reserved

- Cake removal method :
- Total installed power :

MATERIAL OF CONSTRUCTION

- Main frame :
- Filter plates :
- Filter cloth :

ELECTRO HYDRAULIC SYSTEM

- Operation :
- Distributor (opening/closing) :
- Relief valves :
- Lower pressure pump :
- Flow rate / pressure (max) :
- High pressure pump :
- Flow rate / pressure (max) :
- Pump assembly :
- Assembly position :
- Electric motor :
- installed power :
- RPM :
- Power supply voltage (service tension)
- Protection :
- Oil tank :
- No of pressure transmitter :
- Connections to piston :

VALVES AND INSTRUMENTS :

- Diameter of pressure gauge :
- Pressure indication :
- Assembly of pump and motor :

© 2022 MECON Limited All rights reserved

- Actuator :
- Solenoid valve :

PUMP

S1. No.	Item No.	HP DIRECT COOLING PUMPS
2	Type	
3	Service(working medium)	
4	Quantity(no.	
5	Capcaity m3/h	
6	Discharge head mWc	
7	Drive (Direct / belt driven)	
8	Motor Speed	
9	Pump speed	
10	Weight of pumpset kg	
	pump	
	Motor	
	Base Frame	
11	Working temperature ^{o}C	
12	Ambient temperature considered ^{o}C	
13	Accessories	
	Companion flanges, bolts, nuts & Gaskets	
	Foundation bolts & nuts	
	Coupling guard	
14	Material of construction	

© 2022 MECON Limited All rights reserved

S1. No.	Item No.	HP DIRECT COOLING PUMPS
	Casing	
	Impeller	
	Shaft	
	Companion flanges	
	Bolts/nuts for flanges	
	Shaft sleeve	
	bearings	
	Foundation bolts / nuts	
15	Duty(continuous)	
16	Shaft power required	
17	Pumps rotating parts are both statically & dynamically balanced	
18	Make:	
	Pump	
	Motor	
	Coupling	
	bearings	
19	Test pressure & Duration	
20	Conforming standard / code for tests to be conducted	

© 2022 MECON Limited All rights reserved

24.10 DATA SHEET FOR SLUDGE SCRAPPER ASSEMBLY

1.	No of assemblies	
2.	Name of foreign collaborator (if any)	
3.	a) Distance between rails b) Size of rails	
4.	Dimension of equipment	
5.	<u>Bridge drive</u> a) type of motor b) K.W c) Motor speed d) Output RPM e) Class of Insulation/degree of protection	
6.	<u>Hoist drive</u> a) Type of motor b) kW c) Motor speed d) Output RPM e) Class of Insulation/degree of protection	
7.	Scrapper speed	
8.	Skim speed	
9.	Type of Brakes	
10.	Type and make of gear boxes	
11.	Power Transmission arrangement.	
12.	a) Make of control panel b) Degree of protection c) Type of panel d) Location of panel	
13.	Over load protection system	
14.	Materials of construction of various components	
15.	G.A drawings and cross section enclosed or not	
16.	Write-up on control scheme enclosed or not	
17.	List of drawings proposed to be submitted for approval enclosed or not	
18.	Quality assurance plan as submitted in Mecon, Performa or not	
19.	a) time bar chart submitted or not b) Delivery period	

© 2022 MECON Limited All rights reserved

20.	List of 2 year's spares and commissioning spares submitted or not.	
	A.C MOTORS	
1.	Make	
2.	Type	
3.	kW , at 40 deg. And at 55 ^{0}C and R.P.M	
4.	Voltage	
5.	Frequency	
6.	Frame size	
7.	Duty	
8.	Class of Insulation	
9.	Enclosure Class	
	D.O.L STARTERS	
1.	Make	
2.	Enclosure Class	
3.	Make of components	
4.	Sheet Steel thickness	
5.	Compliance with T.S	
	LIMIT SWITCHES	
1.	Type	
2.	Make	
3.	Enclosure Class	
4.	No. of N.O + N.C Contacts	
	CABLES Power Cables/Control cables/Festoon Cables	
1.	Make	
2.	Conformity with T.S	

© 2022 MECON Limited All rights reserved

24.11 DATASHEET FOR SCALE REMOVAL FILTER

Sl. No.	Description	
1.	Shell dimension: diameter and length, mm	
2.	Vessel design code adopted	
3.	Design pressure, kg/cm^2	
4.	Hydro-test pressure, kg/cm^2	
5.	Guaranteed output between two successive backwash	
6.	Guaranteed effluent quality	
7.	Flow rate, m^3/h	
	Normal	
	Maximum	
	Backwash	
	Rinse	
8.	Head loss through bed, mWC	
	Normal	
	Maximum	
	Backwash	
	Rinse	
9.	Filter Materials	
	Type	
	Size of grading, mm	
	Quantity per filter, m^3	
	Life of filtering material year	

© 2022 MECON Limited All rights reserved

Sl. No.	Description	
10.	Bed depth and free board provided	
11.	Time required for backwash	
12.	Time required for rinse Minimum	
13.	Material of construction of vessel	
14.	Type and material of inlet distributor and under drain system	
15.	Material and detail of nozzle	
16.	Filter shell and dished End thickness, mm	
17.	Flooded weight, kg	
18.	Empty weight, kg	
19.	Compressed air requirement and pressure	
20.	Time of air scouring in min.	
	BLOWER	
1.	Nos offered	
2.	Make	
3.	Capacity, m^3/min	
4.	Total head, mWC	
5.	Rpm of blower	
6.	kW of motor	
7.	Rpm of motor	
8.	Type of coupling	
9.	Size of suction/ discharge, mm	

© 2022 MECON Limited All rights reserved

Sl. No.	Description	
10.	Make of motor	
11.	Material of construction	
12.	Total weight, kg	
LOW VOLTAGE CAGE MOTORS (GENERAL PURPOSE CONTINUOUS DUTY)		
Sl. No.	**Description**	
1.	List of deviation from specification, if any,	
2.	Make type	
3.	Rated Kw at 40^0C, S1 duty	
4.	Rated kW at specified ambient	
5.	Rated voltage & system condition	415 + 10% 50 Hz, + 5% (combined variation 10%) 50 kA fault level
6.	Frame size	
7.	Class of insulation	
8.	Rated speed & direction of rotation	
9.	Rated current	
10.	Starting current	
11.	Operation at 80% rated voltage for 5 minutes	Suitable/ not suitable
12.	Operation at 150% rated current for 2 minutes	Suitable/ not suitable
13.	No. of starts/hr (equally spread) permissible, from cold condition	
14.	No. of starts in quick succession a) from cold condition b) from hot condition	

© 2022 MECON Limited All rights reserved

Sl. No.	Description	
15.	Located rotor withstand time at 110% rated voltage	
16.	Located rotor torque	
17.	Pull up torque	
18.	Break down torque	
19	Max. permissible GD^2 of load	
20.	Nema Classification for speed-torque characteristics	
21.	Max. winding temperature by resistance method	
22.	Type of construction	
23.	Whether casing feet is integral with the frame	
24.	Degree of protection of enclosure	
25.	Material of stator frame	
26.	Number and size of aluminum cables that can be terminated	
27.	Earthing sound provided inside terminal box	
28.	Detail of thermal protection	

24.12 CHEMICAL DOSING SYSTEM

Trade Name / No.	
Manufacturer	
Recirculation System	
Base Group	
Function	Scale / Corrosion inhibitor / Biocide / Dispersant / Cleaning Agent
To be dosed during	Pre-cleaning / Passivation / Regularly

© 2022 MECON Limited All rights reserved

Dosage Basis	Make-up / Blow down / Circulation rate / System Volume
Dosage rate ppm	
- precleaning	
- passivation	
- regular operation	
Dosage frequency	Continuous / Once in 15 days
Dosing point	Cold sump / Hot sump / CT Basin / Suction
Total chemical consumption for	
Precleaning Kg	
Passivation Kg	
Regular dosage Kg	
Dosing method	By metering Pumps / Manual Pouring
Metering Pumps	
No.	
Make	
Model	
Capacity	
Power requirement	
Capacity adjustment	
Carbuoy / Drum	
Capacity lit.	
Total weight Kg	
Size	

© 2022 MECON Limited All rights reserved

24.13 DATA SHEET FOR EFFLUENT TREATMENT PLANT

Dewatering Station Data Sheet

- Type of filter press : horizontal/vertical
- Quantity : 2 no.
- Operating temperature : 60 to 70 °C
- Capacity : by tenderer
- Solid content : -
- Cake Solid content :
- Flammable conditions : none
- Area classification : safe
- Service pressure :

CONSTRUCTION FEATURES

- Cake holing capacity :
- Type of operation : fully automatic
- Filtration cycle time : one hour
- Plate size :
- Filtration area in m^2 :
- Piping battery limit connection : welded
- Maximum design temperature :
- Cake thickness :
- Design service pressure :
- Feed inlet pipe size :
- Filter outlet :
- Plate movement : cam
- Drive for movement : hydraulic motor
- Filter cloth size :
- Filter plate type :

© 2022 MECON Limited All rights reserved

- Plate thickness :
- Cake removal method :
- Total installed power :

MATERIAL OF CONSTRUCTION

- Main frame :
- Filter plates :
- Filter cloth :

ELECTRO HYDRAULIC SYSTEM

- Operation :
- Distributor (opening/closing) :
- Relief valves :
- Lower pressure pump :
- Flow rate / pressure (max) :
- High pressure pump :
- Flow rate / pressure (max) :
- Pump assembly :
- Assembly position :
- Electric motor :
- installed power :
- RPM :
- Power supply voltage (service tension)
- Protection :
- Oil tank :
- No of pressure transmitter :
- Connections to piston :

VALVES AND INSTRUMENTS :

- Diameter of pressure gauge :
- Pressure indication :

© 2022 MECON Limited All rights reserved

- Assembly of pump and motor :
- Actuator :
- Solenoid valve :

PUMP

Sl. No.	Item No.	HP DIRECT COOLING PUMPS
2	Type	
3	Service(working medium)	
4	Quantity(no.	
5	Capacity m3/h	
6	Discharge head mWc	
7	Drive (Direct / belt driven)	
8	Motor Speed	
9	Pump speed	
10	Weight of pumpset kg	
	• pump	
	• Motor	
	• Base Frame	
11	Working temperature ^{o}C	
12	Ambient temperature considered ^{o}C	
13	Accessories	
	• Companion flanges, bolts, nuts & Gaskets	
	• Foundation bolts & nuts	

© 2022 MECON Limited All rights reserved

Sl. No.	Item No.	HP DIRECT COOLING PUMPS
	• Coupling guard	
14	Material of construction	
	• Casing	
	• Impeller	
	• Shaft	
	• Companion flanges	
	• Bolts/nuts for flanges	
	• Shaft sleeve	
	• bearings	
	• Foundation bolts / nuts	
15	Duty(continuous)	
16	Shaft power required	
17	Pumps rotating parts are both statically & dynamically balanced	
18	Make:	
	• Pump	
	• Motor	
	• Coupling	
	• bearings	
19	Test pressure & Duration	
20	Conforming standard / code for tests to be conducted	

© 2022 MECON Limited All rights reserved

24.14 DATA SHEET FOR VALVES

1.	Type of valve	
2.	Constructional length, flange to flange with tolerances.	
3.	Height of hand wheel from centre line of valve	
4.	Fixing of seat rings to body and gate.	
5.	Hand wheel diameter	
6.	Force required on hand wheel/ chain for opening and closing of valves.	
7.	Number of hand wheel revolutions for full opening.	
8.	Height of lift per revolution.	
9.	Spindle diameter	
10.	Type of spindle threads	
11.	No. of starts of spindle thread	
12.	Weight of each valve	
13.	Pressure drop	

MATERIAL OF CONSTRUCTION

A. <u>GATE VALVE/GLOBE VALVE/BUTTERFLY/BALL (AS APPLICABLE)</u>

1.	Body	
2.	Bonnet	
3.	Yoke	
4.	Wedge/Disc	
5.	Spindle	
6.	Seat ring	
7	Yoke Sleeve	

© 2022 MECON Limited All rights reserved

8	Hand Wheel/Chain wheel	
9	Gland Bush	
10	Gland Packing	
11	Gland Flange	
12	Body Bonnet Gasket	
13	Bonnet Bush	
14	Bonnet Stud	
15	Bonnet Stud Nut	
16	Hand Wheel Nut	
17	Lifting Lugs	
18	Companion Flanges	
19	Gasket for Companion Flanges	
20	Fasteners for Companion Flanges	
21	Type of Wedge for Gate Valve	

B. **NON-RETURN VALVE**

1.	Body	
2.	Cover	
3.	Hinge	
4.	Hinge Pin	
5.	Hinge Pin Spacer	
6.	Disc	
7.	Seat ring	
8.	Disc Nut	

© 2022 MECON Limited All rights reserved

9.	Disc Washer	
10.	Cotter Pin	
11.	Cover Stud	
12.	Cover Stud Nut	
13.	Gasket for Cover	
14.	Companion Flanges	
15.	Gasket for Companion Flanges	
16.	Fasteners for Companion Flanges	

Testing

1. List & type of tests

2. Testing Standard to be followed

   a. Brief description
   b. Allowable leak rates for pneumatic & hydraulic tests.

3. Wt. of assembled valve.

© 2022 MECON Limited All rights reserved

UTKARSHA ALUMINIUM DHATU NIGAM LIMITED

GENERAL SPECIFICATION
FOR
GASES & LIQUID FUELS
(GS- 02 PART- II)

MECON LIMITED
RANCHI – 834 002

No. MEC/S/11/35/Q7R6/GTS/01/R0 **JUNE' 2022**

LIST OF CONTENTS
PART – II (GASES & LIQUID FUELS) OF GS - 02

Sl. No.	Description	Page No.
01.01	REGULATIONS	3-3
01.02	PIPING LAYOUT	3-8
01.03	DESIGN PARAMETERS	8-8
01.04	SELECTION OF PIPE SIZE	8-9
01.05	EXPANSION AND FLEXIBILITY.	9-10
01.06	VALVES AND MEASURING DEVICES	10-11
01.07	CONDENSATE DISPOSAL	11-12
01.08	STEAM TRAPS / MOISTURE TRAPS-	12-12
01.09	PURGING SYSTEM	12-12
01.10	BLEEDERS/ VENTS	12-12
01.11	VALVES AND ISOLATING DEVICES	12-16
01.12	HOSES & HOSE BOXES	16-16
01.13	SPECIAL CONSIDERATIONS FOR OXYGEN PIPING	16-17
01.14	DESIGN CONSIDERATIONS	17-18
01.15	PIPE SUPPORTS ANCHORS, RESTRAINTS	18-19
01.16	VALVES AND SPECIALITIES	19-21
01.17	FABRICATION AND INSTALLATION OF PIPE WORK	21-22
01.18	THERMAL INSULATION OF PIPELINES	22-23
01.19	LOAD CALCULATIONS AND FLEXIBILITY ANALYSIS	23-24
01.20	LOCATION OF PIPE SUPPORTS	24-25
01.21	FLEXIBILITY ANALYSIS	25-27
01.22	ERECTION OF PIPELINES	27-31
01.23	ERECTION OF OXYGEN PIPELINES	31-35

© 2022 MECON Limited All rights reserved

01.24	PAINTING	35-35
01.25	PIPING MATERIAL SPECIFICATION	35-44

© 2022 MECON Limited All rights reserved

02. GASES AND LIQUID FUELS

01.01 REGULATIONS

The entire interplant and in shop pipelines shall conform to the provisions of relevant Indian statutory regulations, wherever applicable, such as :

- Indian Safety Rules
- Static & Mobile Pressure Vessels Rules
- Indian Petroleum Regulations
- Indian Explosives Manual
- The Carbide of Calcium Rules
- Indian Boiler Regulations
- IPSS No. 1-11-022-98

The Contractor shall have to obtain clearance/ approval of all the relevant drawings/ documents from such statutory bodies.

01.02 PIPING LAYOUT

General

Routing and layout of piping system shall be as per good engineering practice. Following factors shall be taken into consideration while designing piping system.

- All functional requirements shall be fully satisfied.
- Adequate clearance is provided for equipment and operating personnel.
- Easy access for operation and maintenance of piping component.
- Convenient supporting points for piping, equipment, valves, etc.
- Adequate flexibility for thermal expansion / movements.
- Aesthetics and neat appearance.

Pipe Laying for Fuel, Industrial Gases, & Compressed Air

01. The gas pipes installed along building wall should not cross window and door way.

02. While laying high pressure gas pipes along the walls, the later should be fire-proof. In doing so, the gas pipes should be laid along solid walls or above the windows of upper floors of plant buildings.

03. When gas pipes are installed along external walls of buildings below window ways, installation of flange, thread joints and also installation of accessories is not allowed.

© 2022 MECON Limited All rights reserved

04. Gas pipes may be laid along with pipes of water, steam, air, etc. and also with oxygen on a common support provided conditions stipulated under various clauses are followed.

05. The following conditions shall be observed when installing gas pipes with other pipes:

a) Additional pipes on existing gas pipes will be allowed to be laid only with the permission of concerned plant personnel.

b) In each case, the gas pipes and supporting structures shall be checked with due consideration for additional loads and practical state of the metal structure of gas pipes.

c) When installing with pipes carrying corrosive fluids they shall be kept at least 500 mm below or by the side of the gas pipe at a distance of 500mm.
If flange joints are provided on pipes carrying corrosive liquids, it is necessary to mount protective baffle plate against falling of corrosive liquids on gas pipes and their supports.

d) The associated gas pipes at the places on gas pipes where valves and other devices are mounted, should be kept at a minimum 800 mm distance from the main pipe.

e) Drainage of the associate pipes should be laid to one side at a distance so that condensate does not fall on gas pipes/ its accessories, supporting structures and their elements, etc.

06. The branch line should generally be installed outside building along roof wall. Branch line having diameter less than 500 mm may be laid inside shop building.

07. Branch line from gas main entering into building through building wall should pass through casings. Internal clearance between casing and pipe should be suitably filled up, wherever required.

08. Gas branch line from gas main passing through roof covering should have circular opening. For this purpose, a circular opening should be made on roof and a taper hood should be provided on the branch line above the roof for protection from rain.

09. Shop headers should be mounted at a height having minimum ground clearance of 4500 mm, when laying them outside the building wall.

10. Layout of gas consuming units in various shops should be such that it is possible to bring the gas pipes above ground.

© 2022 MECON Limited All rights reserved

The following conditions should be observed for this purpose :

a) Clearance between wall and surface of the pipes above DN 200 mm should be at least 400 mm, and for gas pipes of DN 200 mm and below clearances should not be less than the gas pipe diameter.

b) Installation of flanges, threaded joints and accessories (except accessories for removal of condensate on a pipeline) is not allowed when it is laid in a channel. The number of welds on such gas pipes should be restricted to a minimum.

c) Installation of gas pipes with air pipes to gas consumer units is allowed to be laid in channels.

d) Channels with gas pipes should not cross other channels, In case, it is unavoidable, air tight tie-plate should be made and gas pipe should be placed in casing. Ends of casing should be taken out beyond the limit of tie-plate by 300 mm at both ends.

e) Channels should have provisions for natural ventilation.

12. Gas pipes in buildings should be located at places convenient for servicing, inspection and repair. It is not allowed to lay gas pipes at places where there are chances of damage due to shop transport.

13. For gas lines installed in hot zone, it is recommended to provide protection against overheating of gas pipes.

14. It is allowed to fasten gas pipes to frames of furnaces, boilers and other units provided these frames are checked for strength by calculations.

15. Gas pipes are not allowed to pass through buildings producing or having materials liable to explode or burn and building of power distributing devices and substations and ventilation chambers and through buildings, in which gas pipe may be damaged by intensive corrosion.

16. Gas pipes should not cross ventilation doors, air exhauster, flue pipes and also gas pipes should not be installed in insufficiently ventilated space and in underground buildings.

17. Installation of high pressure gas pipes below main working platforms of shops is not permitted.

18. Gas pipes along bridges should be made of seamless pipe and laid in the open at a horizontal distance of one metre from ends of pavements for passing of people and it should be within reach for servicing. Supporting

© 2022 MECON Limited All rights reserved

elements of the bridge should be accordingly checked for loads from gas pipes. Laying of gas pipes in channels of bridges is not allowed. All welding joints of gas pipes in the area of their attachment to bridge should be radiographed.

19. Gas pipes passing through walls, ceilings, and other structures of buildings of construction shall be encased in a steel pipe having inside dia at least 50 mm more than that of the respective gas pipe. The Gas pipe shall have no joints in the section at such crossings. The gap between the gas pipe and the outer pipe shall be filled with non/inflammable material, but allowing vertical and horizontal movement.

20. The laying of moist fuel gas pipelines shall be as per IPPS: 1-06-014-95

21 Pressure pipe work for gases and liquid fuels generally shall be routed overhead. All overhead interplant pipe work to be routed such that they will have a minimum clearance of 6.0m between bottom of supporting structures / pipes and road / railway track. The pipelines laid over hot tracks shall have a minimum clearance of 10.0m. In case, protective shields are used in these places, this clearance may be reduced to 6.0m. Buried pipes, wherever laid, shall be provided with a minimum earth covering of 1200mm in areas subject to temporary loads and minimum earth covering of 1000mm in areas not subject to temporary loads, unless otherwise specified.

22. For the pipelines laid on roof, the distance from the external edge of the pipe to the roof shall be at least 0.5m.

23. All shop headers, except for gravity fluids, shall be generally routed along columns in multiple rows at a height 4 to 6m above floor level. The connections to equipment shall be taken through suitable covered floor trenches for shops at ground floor and for basements, for elevated operating floors, the equipment pipe work connection may be taken below the floor level. All isolated single pipe connections to equipment shall be buried in the flooring / equipment foundations. Pipe work from basement and oil cellars to main equipment shall be routed in pipe tunnels / trenches with adequate spacing for easy maintenance. All pipe trenches shall be covered by chequered plate or by concrete slabs.

24. The bleeder pipes for purging lines and other exhaust pipe work shall be routed upward along columns / gable ends and / or walls to a minimum height of 4,000mm above the roof level / platforms.

25. For the gas pipelines laid along the building walls, the clearance between the gas pipelines and the wall shall be adopted so as to ensure the possibility for maintenance of the gas pipelines. The gas pipelines laid on the walls must not cross the window and door openings.

© 2022 MECON Limited All rights reserved

26. Branch pipes from the headers to the building through walls and the roof shall be encased.

27. Gas pipelines shall be earthed when laid under the high voltage lines, a protective sheet guarding shall be provided above the gas pipelines. The guarding shall be earthed. The earthing resistance must be not over 10 ohm.

28. Platforms, access ladders, hand railing, etc. shall be provided for operation and maintenance of valves, instruments and controls. Manholes and hatches shall be provided for access inside the gas pipelines.

29. At all the places of regular maintenance (gate valves, throttle valves, orifice plates, hatches, manholes, bleeders, etc.) if located at a height of over 2.5m from the maintenance level, provision shall be made for stationary platforms with the railings and stairs / ladders.

30. All branch pipes from main header shall be connected through a hydraulic arrestor.

31. Shut-off globe valves shall be provided on both the inlet and outlet sides of the arrestor and unions shall be provided for repair or replacement, if required.

32. Oxygen pipelines may be laid on either side of the fuel gas line as per the following norms.

Oxygen Pressure in Kg/cm^2	Diameter of Oxygen pipe mm	Permissible gap in mm
Upto 0.1	Upto DN 500	300
Upto 0.1	Above 500	600
0.1 to 16	Upto 500	800
16 to 35	Upto 200	800

Continuous installation is not allowed if the oxygen pressure is more than 16 Kg/cm^2 and diameter of pipe is more than 200mm and also if the oxygen pressure is more than 35 Kg/cm^2 for any size.

Minimum clearances of overhead oxygen pipelines (surface to surface)

i) Explosion Hazardous shops : 3 meters clearance
ii) Railway tracks : 3 meters
iii) Railway bridge and platform : 3 meters
iv) Roads : 1.5 meters upto embankment
v) High voltage Transmission lines

© 2022 MECON Limited All rights reserved

A.	Parallel to pipelines	:	10 meters
B.	Crossing the pipelines upto 20kv	:	3meters
	35 to 150kv 220kv	:	4 meters

vi)	To place of hot metal tapping and Source of open fire	:	10 meters
vii)	Insulated L.T cables	:	0.5 meters
	Bare conductor L.T	:	1.0 meters.

01.03 DESIGN PARAMETERS

Design pressure for various categories of piping shall be as follows :

Low Pressure Fuel gas piping : 1.25 Times Maximum Operating Pressure but not less than 2000 mmWC

All other gas piping : 1.25 Times Maximum Operating Pressure

Design temperature for all fluids shall be maximum working temperature of fluid. In case of ambient temperature, design temperature may be taken as 60 deg C for piping exposed to sun and 45 deg C for indoor piping.

Flow rate for design purpose shall be taken as peak flow rate for the respective section. In case of branches to individual consumers, peak flow rate for the consumers shall be considered. For common branches and main headers, peak flow rate based on consumption pattern/ diversity factor may be used for pipe sizing.

Future augmentation of flow rate for common piping shall also be taken into consideration for pipe sizing.

01.04 SELECTION OF PIPE SIZE

- Pipelines shall be sized by limiting the gas velocity in the pipeline as per Table 02-01.
- Peak flow rate based on the distribution pattern shall be considered for sizing of pipes.
- Sizing shall be based on actual flow rate at worst combination of parameters i.e. lowest pressure and highest temperature.
- In case recommended velocity is dependant on diameter range, after initial sizing, velocity should be re-checked and if required size should be recalculated.
- Nearest higher standard pipe size shall be selected after calculation.

For critical applications, pipe sizes should be re-checked after pressure drop calculations and availability of required pressure at consumer point. If required pipe size may be increased to meet the pressure drop criteria.

© 2022 MECON Limited All rights reserved

TABLE 02-01

RECOMMENDED VELOCITIES IN CARBON STEEL PIPES

Medium	Pressure Range (kgf/cm^2 g)	Gas Velocity, m/sec (maximum)	Remarks
Nitrogen, Argon, Compressed Air, Instrument Air	Up to 6	8 –10	
	6 - 16	12 – 16	
	16 - 40	16 - 20	
Oxygen	Up to 16	10	
	16 - 40	8	
Acetylene	Up to 1.2	8	Up to DN 25
Liquid Fuels	All Pressures	1.5	

01.05 EXPANSION AND FLEXIBILITY.

All Pipe work shall be designed to provide sufficient flexibility against thermal expansion to prevent development of undesirable forces and moments at points of connection to equipment, at anchorage or at guide points.

As far as possible, flexibility shall be provided by planning route with change of direction or by the use of bends, loops or off-sets.

Whenever self-compensation can not be achieved by pipe routing, provision for thermal expansion shall be made by providing expansion loops or expansion joints as per following criteria:

- U loops shall be provided for all low pressure fuel gas piping up to DN 300 size and high pressure piping for all sizes.

- For high pressure piping, where U-loop is not possible, bellow type expansion joint shall be provided. Bellow type compensators shall also be provided in low pressure gas lines.

  While locating the expansion joints following guidelines should be followed:

- Bellow compensators should be located preferably in the center of two fixed points.

© 2022 MECON Limited All rights reserved

- U-Compensators should be located in between two fixed points with variation in pipe lengths in the ratio of 1:2 (max).

- Bellow and gland compensators shall have flanged connection with pipes

U-loop Compensator

U-loops shall be provided in piping system using elbows/ bends as per piping material specification.

U-loops shall be in horizontal plane and loops for many pipes running in parallel may be provided at same location parallel to each other.

Loops shall be in the same plane as the pipe route. However, in some cases, where there may be obstruction due to other parallel pipes, U-loop plane may be raised to clear the pipes by providing bends.

Loops in vertical plane can be provided in exceptional cases if horizontal loop is not possible due to layout considerations. Provision shall be made in piping for draining of condensate, venting, etc.

Bellow Compensator

Bellow type expansion joints shall be made from SS sheet and can be single or multi layer with number of convolutions. Minimum thickness of bellow shall not be less than 2 mm.

Loads due to Compensators:

Loads on anchor points due to bellow compensators shall be considered based on the feed back from supplier / manufacturer.

01.06 VALVES AND MEASURING DEVICES

Valves shall be provided on pipe work for isolation of pipe sections and equipment, control of pressure, flow and level of fluids, venting, draining, pressure relief, etc. They shall be suitable for the service conditions in all respects and located suitably considering ease of operation and maintenance. Generally the following practice shall be followed;

- Isolation valves :

  On all pipelines both at the sources and consumers also in the branch pipes to individual buildings and shops with a nominal diameter of 100 mm and above (if required, for smaller diameter as well).

- Isolating and by-pass valves for flow meters, filters, etc.
- Check valve on all pipelines requiring unidirectional flow.

© 2022 MECON Limited All rights reserved

- Quick action safety shut-off valve on fuel oil, gas/ air lines to furnaces and heaters as well as before each consumer or group of consumers.
- Pressure regulating valves with isolating, by-pass and relief valves for all pressure reducing installations.
- Manual drain valves at low points and manual vent valves at all high points of pipe work.
- Regulating valves with integral pressure gauge for all oxygen outlet points, fuel gas outlet, etc.
- All valves shall be provided with the operating handle/ lever/ wrench within easy reach. Wherever necessary, operating platforms shall be provided. Valves located in inaccessible locations such as basements, tunnels, etc. shall have remote actuation by means of electric motors, solenoids, etc.
- For fluid lines with working pressures over 16 atg, valves of diameter 300 mm and above shall be provided with by-pass arrangement, unless otherwise specified in technical specifications.
- Shut-off valves of dia 500 mm and above as well as shut-off valves of all diameter with remote or automatic control shall be provided with electric drives.
- To facilitate operation of manually operated valves, adequate gearing and handling arrangement shall be provided, wherever necessary
- All gas branch pipes from the in shop collector to the consumers shall be provided with bleed valve arrangement comprising two gate valves in succession with a bleeder in between. After the second gate valve (upstream), a provision shall be made for installation of a blank flange.
- Shop pipe work for all production and ancillary units shall have metering of flow and pressure at the battery limits.

01.07 CONDENSATE DISPOSAL

For compressed air lines automatic moisture traps shall be provided.

Condensate Drain Arrangement for Medium pressure High pressures gas

i) Condensate disposal for gases having higher line pressure have to be done by using adequate pressure seal pots.

ii) In a high pressure seal pot the metallic float is utilized for disposal of condensate and prevent leakage of gas from the pot.

iii) The seal pot should be air tight and wall thickness should be decided on the line test pressure.

© 2022 MECON Limited All rights reserved

iv) Condensate coming out of seal pot should be discharged into phenolic sewerage line or in a reservoir provided locally.

01.08 MOISTURE TRAPS

At low points in compressed air pipeline moisture traps with strainer assembly will be provided to drain out the condensate.

01.09 PURGING SYSTEM FOR FLUE GAS

System for feeding purge gas and venting of gas/ air from the piping system shall be provided for all fuel gas piping.

01.10 BLEEDERS/ VENTS

Bleeders shall be provided on all the gas handling devices and pipelines for purging and venting any section of the gas pipeline. The purging bleeders of pipelines carrying different fluids, separated by gate valves, are not allowed to be combined into one bleeders. The bleeders shall be taken above the gas pipeline or above roof of the building by at least 4 m, but not lower than 8 m from the ground level. Bleeders on shop roofs shall be located away from roof monitors.

i) Bleeder/vents shall be provided for purging / venting any section of the pipeline. Bleeders shall be located generally at all high points in the piping system. Bleeder / vents shall also be provided at down stream / upstream of isolating devices & U-seals.

ii) All vents shall discharge at a safe height into atmosphere. The vents shall be above the operating floor / platform for vent valve or roof of the building 4m, but not lower than 8 meters from the ground level. In the presence of the aeration monitors on the roof of the building, the vents shall be located so as to eliminate the possibility of purged gas getting inside the premises.

iii) On straight lengths bleeder/vent shall generally be provided at an interval of 100 meters.

iv) All vents shall have T piece/cowl with bird screen at the top. For isolation of bleeder/vent pipe flanged gate valve of rising stem type shall be provided. Sampling points (DN 25) below isolation valve with lubricated taper plug valve shall be provided in the line to monitor gas samples at the time of purging.

v) Vent pipes of different gases shall not be connected through a common vent.

01.11 VALVES AND ISOLATING DEVICES

Isolating devices shall be provided in piping system for isolation of pipe sections as well as for isolation of all other mounted accessories for the purpose of

© 2022 MECON Limited All rights reserved

operation and maintenance. They shall be suitable for the service conditions in all respects and located suitably considering ease of operation and maintenance.
Isolation valves shall be provided at the following locations:

- On all pipe lines both at the source and at consumer ends
- On all branch pipes to individual buildings and shops
- On all bleeder / vent pipes, purge gas inlet points, drain points, sampling connections, etc.
- On all by-pass lines for large valve, regulators, filters, moisture traps etc.
- Instrumentation tapping points.

Selection of Isolating devices:

The gas cut-off arrangement shall ensure the possibility of complete cut-off gas along with fast and safe operation. Gate valves with rising stem shall be used normally for isolation in piping system.

For sections where the gas tight isolating device can not be provided, provision to insert blind flange at outlet of gate valve shall be made.

Sectionalizing / isolation for purging of fuel gas lines may be done with Spectacle blinds.
Gas tight butterfly valves may be used for isolation near consumption points requiring frequent and quick operation. These can be valves with gas tight seating or eccentric valves for gas tight isolation.

Emergency quick shut off valves shall also be double eccentric butterfly valves.

For fluid lines with working pressure over 16 kg/cm2 (g), valves of DN 300 and above shall be provided with by-pass arrangement or depressurisation arrangement for pipe sections.

Selection of Actuators for Isolating devices:

For high pressure lines, gear operator shall be provided as per manufacturer's recommendations for limiting the operating torque to acceptable limits.

Gate Valves of size DN 500 and above shall be provided with electric actuators. Electric actuators for fuel gas lines shall be of flame proof design if located in gas zone/in shop. In the interplant area these actuators need not be flame proof. Position and torque limit switches shall be provided on actuators. Manual over ride shall also be available in actuators.

Goggle valves shall have electrical actuators for disc/ plate movement and electro hydraulic drive for flange separation. Manual arrangement for valve operation shall also be provided with gear and chain operation from convenient location. The hydraulic power pack for the valve shall include one motorized pump and one manual pump. Encased design goggle valve with vent shall be used at locations closed to buildings.

© 2022 MECON Limited All rights reserved

Electrically operated gate valves for gas pipelines of smaller diameter are recommended to be used only if they are incorporated in the automation scheme.

All valves located remotely, requiring frequent operation and / or with automatic control shall be provided with electric drives, electro- pneumatic drive, solenoids etc.

Check Valves

Check valves shall be used in piping system where unidirectional flow is required. For small size pipes below DN 50, lift check valves shall be used. For DN 50 and above, swing check valves or dual plate check valve shall be used. Lift check valves shall be used only in horizontal pipeline. It should not be used in vertical pipeline. For low pressure gas lines dual plate check valve will be used.

Pressure Regulating Valves

The Pressure Regulating valve shall be of globe / needle type, with material specifications, dimensional standards etc. as per the relevant Piping Material Specification (PMS) for the service for which the valve is intended.

001 For Compressed Air

Pressure regulators of sizes up to DN 50 shall be complete with a prefilter having 40 micron porous bronze filtering element in shatterproof plastic or glass container, pressure regulator and pressure relief arrangement to prevent overpressure at downstream of the regulator.
For higher sizes to meet larger flow rates, the pressure regulator shall be self actuating type as per manufacturer's standards, but capable of meeting the service conditions and duty specified.

002 For Other Gases

For dry air, nitrogen and argon the pressure reducing valves shall be of stainless steel. For oxygen service, the valve shall be of bronze construction and shall be degreased and cleaned to meet the service requirements.

For acetylene and LP gas services, the pressure regulators shall have material compatible for the service.

Pressure regulators for large diameter gas lines shall comprise butterfly type valves actuated by means of an oil hydraulic control system, which is actuated in turn by changes in the preset downstream pressure through impulse pipe work.

Pressure Relief Valves

These shall be spring loaded type and shall automatically open when the pressure on the pipelines, on which they are mounted, exceed preset values. The valves

© 2022 MECON Limited All rights reserved

shall have end connections and materials specified for throttling valves in relevant PMS.

Relief / Safety valves for steam service shall have IBR certification. Relief valves shall have hand wheel / wrench for adjustment of preset value of relief pressure.

Pressure relief valves shall always be used on outlet lines from the pressure reducing valves. Pressure relief valves shall be designed for full flow rate from pressure regulators. Set pressure shall be 10 % higher than the maximum working pressure at outlet of regulator.

Filters

Filters will be installed in piping system before the pressure regulators/ control valves and at consumer points depending on nature of fluid and technological requirements. For small size pipes below DN 50, Y-type strainers with sintered/ wire mesh cartridge may be used. For higher sizes, straight line mounted filters with removable cartridge shall be used.
Filter element can be of wire mesh, sintered material, woven fibers or other suitable type as per process requirement. Filtration area shall be at least 500% of the inlet cross section area.

Safety Shut-Off Valves

These shall shut-off in case the pressure on the upstream side of the valve becomes less than preset values. The valves shall be of globe type for DN 50 and below and butterfly type for sizes above DN 50. The material shall be suitable for service conditions. The valves shall be actuated by electromagnetic or pneumatic device working in conjunction with pressure switches located on the pipelines being safeguarded and shall include all components required for its functioning.

Flash back arrestor

In acetylene piping, flashback arrestors shall be provided at the outlet of cylinder manifold system and at each consumer point. Dry type arrestors with packed cartridge shall be used. Number of arrestors in parallel may be used to take care of flow requirement**.**

Electrical continuity

Metallic electro static jumpers shall be provided at all locations on all flanged connections, in case of flammable gases and oxygen. This is to prevent accumulation of static electricity in pipe sections. Piping system shall be suitably earthed at a regular length of pipeline.

Measuring and control devices

Instrumentation and control devices shall be provided for monitoring the fluid distribution system, regulation of pressure and flow.

© 2022 MECON Limited All rights reserved

Flow measurement with recording shall be provided at battery limit of all production and consuming units, inlet/ outlet piping of storage installations, on surplus gas bleeder piping to flare system etc. When orifice plates are used, proper care shall be taken in piping layout for preventing accumulation of condensate by providing suitable slope or drain system. Requirement of straight length upstream and downstream of flow sensors shall be maintained as per instrumentation requirements. Normally the straight length recommended is 10 times pipe dia before inlet and 5 times pipe dia after outlet of device.

Pressure measurement shall be provided at battery limits of production and consumer units, at outlet of storage systems, inlet and outlet of pressure regulators/ controllers, etc.

Pressure and Flow Control valves shall be provided at gas mixing stations, main pressure regulating stations, flare stack piping, inlet/ outlet piping of storage installations (gas holders). For low pressure gas lines, butterfly type control valves shall be used. For high pressure gases, globe valves may be used. Sizing of control valves shall be based on flow rate and pressure parameters.

01.12 HOSES & HOSE BOXES

General purpose oxygen and propane/LPG shall be provided with necessary isolating valves, pressure control valves, hoses & hose boxes at each consumer points. Nipples along with quick coupling hoses shall be provided for steam, compressed air and nitrogen for purging and other needs.

01.13 SPECIAL CONSIDERATIONS FOR OXYGEN PIPING

Filters should be installed in the oxygen pipeline system at the following points:

a) Upstream of components having soft seating in contact with the oxygen stream e.g. pressure regulator and control valves.

b) Upstream of components that have moving parts in contact with the oxygen stream e.g. flow measuring and limiting devices.

Provision shall be made for safe and easy access for frequent cleaning and / or replacement of the filter element. The larger capacity filters like (a) above should be provided with differential pressure gauge for monitoring the condition and providing indication for cleaning / replacement of the filter element. The filter bodies shall preferably be of copper alloy or stainless steel and filter element of copper alloy or glass cloth suitably earthed to the filter body with copper wires.

Two (2) or more pressure relief valves should be provided downstream of each set of pressure reducing valves. One or more main relief valve(s) should be capable of discharging 100% of the full oxygen flow and limiting the pressure within the defined limits. The secondary relief valve should be sized to discharge the nominal leakage from the pressure reducing valves. The relief valves should be

© 2022 MECON Limited All rights reserved

positioned as close as possible to the pressure reducing valves. The vent lines from the relief valves should be preferably of stainless steel or copper.

Consideration should be given for providing small size pressure equalisation bypass isolation valves across large diameter isolation valves in large pipeline systems so as to ensure safe pressurization of the downstream pipeline. The bypass pipe work and valve should be of copper or copper alloy.

Fire break sections may be installed in the oxygen pipeline to limit the propagation of combustion in a steel pipeline. Fire break sections may be introduced immediately downstream of the main isolation and throttling valves where the velocities can be high. The fire break section will be either a length of copper pipe having the same inside diameter as the main pipe with flanges fitted at the two ends which is installed between the steel pipes or a copper insert tube made from copper sheet / tube and inserted inside the steel pipe downstream of the valves. The copper insert tube is generally used in large diameter steel pipelines.

In steel pipelines, care should be taken to install isolation valves on straight sections of the pipeline. Any pipeline component which is likely to cause a change in the flow pattern, like reducer, bend, tee or “Y” connection, orifice plate etc., should be at a distance of at least four diameters away from the valve.

For cleaning of the gaseous oxygen pipelines after erection, provision for “pigging” will be provided for pipelines having diameters upto DN 200. However, if the pipeline is pickled and phosphated as per approved procedure, pigging of pipelines is not essential. The bends on these pipelines will have a radius of 5 DN. Extra care will be taken regarding cleanliness of large dia. pipeline (DN 250 and above) during installation. The bends for the larger dia. pipes will have bend radius of mimimum 3 DN.

Gaseous oxygen pipe work shall preferably have butt welded pipe joints. To reduce safety hazards the number of components should be kept to a minimum compatible with the system requirements. Flange joints shall be used only for connection of the pipe to the system components on the pipe work. Threaded joints and couplings should be sparingly used.

01.14 DESIGN CONSIDERATIONS

Piping system shall be designed with high degree of reliability so that the systems perform the duty of fluid handling without structural or functional failure under most adverse condition of plant operation. All piping systems shall be designed with sufficient corrosion and stress margins to ensure a life time without failure, not less than the life of the plant. Piping system shall not impose reactions on equipment terminals exceeding permissible limits even under adverse operating conditions. Personnel injury from discharge of hot fluids from drains, steam traps, hot pipes or exposures to pipe vibrations shall be guarded against.

01. Pipes shall be sized for minimum pressure drops and considering the velocity limitation for various types of fluids.

© 2022 MECON Limited All rights reserved

02. Adequate flexibility shall be provided in the pipelines to keep stresses and reactions in the system arising due to thermal expansion or other effects within limits. Where the piping terminates at an equipment or at the terminal point of a system, the reactions and thermal movement imposed by piping on the equipment or the system concerned shall be well within the limits specified.

03. If cold springing of pipeline is used, care shall be taken in determining the location and amount of cold spring gap. Cold spring gap shall be located at points where the bending and torsional moments are minimum. Use of cold spring gaps less than 10mm shall not be acceptable and cold spring gaps above 100mm shall be avoided. All outdoor piping exposed to sunlight carrying fluid at a temperature less than 80^0C shall be designed considering thermal expansion corresponding to 80^0C and empty pipe as one of the operating conditions although not necessarily the worst.

04. All piping shall have butt welded connections with minimum of flanged joints for connection to vessels and equipment to facilitate erection and maintenance. All high pressure steam valves and accessories shall have welded connections. Standard fittings shall be used wherever practicable. Unless otherwise specified, for all welded lines with pressure above 4 kg/cm2 g and / or temperature above 200^0C, branch connections with branch sizes upto 25% of welded mains shall be made with special forged steel welded fittings.

05. Bends for pipes for oxygen service shall have a radius of not less than three times the nominal pipe dia unless otherwise specified.

06. In general pipes having size 50mm and above, shall be joined by butt welding and 40mm & below by socket welding / screwed connection. Threaded joints shall have to be seal welded except for galvanized pipes where teflon sealing tapes shall be used. For galvanized pipeline, pipe joints which are to be made before galvanising shall be of welding type. Those joints which are to be made after galvanising shall be either flanged or screwed type. As far as practicable, whole fabricated piping assemblies shall be galvanized at a time in order to minimize the number of joints to be made after galvanising.

07. All pipelines shall be provided with drain connections at the lowest point for removing accumulated condensate or water and line draining. The drain piping shall have drain pockets and isolation valves. Trap stations shall be provided where necessary. Lines shall be given proper slope towards the drain points.

01.15 PIPE SUPPORTS, ANCHORS, RESTRAINTS

- In general pipe supports, restraints, braces or anchors shall be located at those points in the building or outdoor where provision has been made for the loads imposed. Loads at the supporting points or restraints shall be determined sufficiently early and provisions shall be made in the building or outdoor structures for pipe supports. The Tenderer shall locate, design, supply and

© 2022 MECON Limited All rights reserved

erect all the supplementary steel structures to properly secure and support all pipe hangers, supports, restraints, etc.

- Provision shall be made for support of piping which may be disconnected during maintenance work. All large pipes and all long pipes shall have at least two supports each arranged in such a way that any length of piping or valve may be removed without any additional supports being required.

- The supporting structures at each support points shall be designed for the highest of the following loads to take into account the extra load during hydraulic testing.
- 1.25 times the maximum load under operating condition

- Weight of pipelines full of water (combined weight of pipe, insulation, valve attachment etc. plus weight of water)

- Weight of pipeline full of water as above plus any cold reaction as anticipated.

- Where the piping system is subjected to shock loads such as thrust imposed by the actuation of safety valves, hanger design shall include provision of shock absorbing devices of approved design. Vibration control devices shall be part of piping system design.

- Outdoor piping shall be designed with due consideration to expansion resulting from exposure to sunlight and care shall be taken to prevent progressive movement of long pipelines. Outdoor piping may be supported on shoes, saddles or steel sections. Effect of support friction especially for large dia pipelines shall be considered and friction forces minimized by suitable arrangement. Piping inside the trenches shall be supported at intervals on steel sections and the arrangement shall permit easy maintenance.

01.16 VALVES AND SPECIALTIES

- All valves shall be of approved make and type. All valves shall be suitable for service condition i.e. flow, pressure and temperature under which they are required to operate.

- All gate/ sluice, globe and needle valve shall be fitted with outside screwed spindles and bolted type glands and covers. Spindle glands shall be of the bridge type construction and screwed glands will not be accepted.

- All gate/sluice, globe and needle valve shall be provided with hand wheel and position indicator. The face of each hand wheel shall be clearly marked with words “open” and “shut” with arrows to indicate the direction of rotation to which each refers. Arrangement limiting the travel of any valve in the “open” or “shut” position shall be provided exterior to the valve body. All globe

© 2022 MECON Limited All rights reserved

valves shall be designed to prevent erosion of valve seats when the valves are operated partially opened. Valves which cannot be operated from the floor or walkways, shall be provided with suitable extension rods and linkages to facilitate operation from the floor or walkways. Chain operation will not be accepted for steam valves. Stems shall preferably be arranged vertically with gland at the top. In no circumstances must the gland be at the bottom. Valves shall not be installed in an inverted position. The design of valves shall be such that it will permit packing of glands under pressure. Where required, valve spindles shall be extended so that the hand wheel is at a height of about 1.0m above the level of the floor or platform from where the valves are to be operated. Where required, they shall be provided with head stocks and pedestals of rigid construction and where gears or bevel wheels are used, these shall be of cast steel or suitable grade cast iron with machine cut teeth.

- Non return valves on all pumps discharges and steam line shall be of an approved non slamming type. Draining arrangement shall be made on both sides of the horizontal non-return valve where such a valve adjoins an isolating valve. Valve bodies shall be provided with removable access cover to enable the internal parts to be examined without removing the valves. Valves shall have a permanent “arrow” inscription on its body to indicate direction of flow.

- Gate sluice valves for low pressure service shall be outside screw rising spindle type. For these valves wherever necessary, chain operator shall be provided to operate the valve from the floor or walkways. Larger size gate valves for low pressure applications shall be provided with bypass and draining arrangement and valves with dia more than 350mm shall be provided with gear operator.

- Valves in corrosive service shall be diaphragm or rubber lined type. Diaphragm shall be of reinforced rubber and rubber lining of body shall have minimum thickness of 3mm. Generally plug valves shall be used in compressed air line. Plug valves shall be supplied with wrench operator. Valves shall be of taper plug type.

- For motor operated valve, a 415V, 3 phase, 50Hz reversible speed motor shall be furnished. Motor shall be capable of producing not less than 1.5 times the required operator torque. Each operator shall be equipped with two adjustable limit and torque switch for both open and closed position. The motor shall be of high torque low starting current. Each operator shall be provided with auxiliary hand wheel for manual operation. The hand wheel shall automatically disengage when the operator is energized.

- Manual operator shall be of worm and gear type, having permanently lubricated, totally enclosed gearing with hand wheel diameter and gear ratio designed to meet the required operating torque. The operator shall be designed to hold the disc in any intermediate position between full opened & full closed

© 2022 MECON Limited All rights reserved

without creeping and fluttering. Adjustable stop shall be built into the operator to prevent over travel in either direction. Operator shall be equipped with direct coupled position indicator and suitable locking device.

- Pressure reducing valves shall be perfectly stable, quiet and vibration less in operation when reducing the pressure for any throughput up to maximum and shall be suitable for continuous use at operating temperature. Valves shall be designed to prevent erosion of the valve seats. Safety valves shall be direct spring loaded type and shall have a tight, positive and precision closing. All the safety valves shall be provided with manual lifting lever. Valves used for compressible fluids shall be of pop type. Safety valve shall be so constructed and adjusted to permit the fluid to escape without increasing the pressure beyond 10% above the set blow off pressure. Valve shall reset at a pressure not less than 2.5% and more than 5% of the set pressure.

- The seat and disc of safety valves shall be of suitable material to resist erosion. The seat of valves shall be fastened to the body of valve in such away that there is no possibility of seat lifting.

01.17 FABRICATION AND INSTALLATION OF PIPE WORK

- Pipe joints shall be assembled with the inside of all pipes and fittings smooth, clean and free from burrs, scale, welding slag, sand and dirt. The inside edges of pipe and tubing shall be reamed after cutting to remove burrs.

- Branches shall, in general, be formed by welding standard fittings. Pipe bends and tees shall be truly cylindrical and of uniform sections. Where permitted for certain services, elbows or branch connections may be formed from steel pipe. Unless otherwise agreed, slip-on welding flanges shall be used on pipe and for connection to low pressure equipment. Weld neck flanges shall be used for butt welding fittings as elbows, tees and reducers and for connection to high pressure equipment.

- Flange drilling shall straddle the natural centre line of pipe. Faces of all flanges shall be 90^0 to the longitudinal axis of the pipe to which they are attached. If distorted after welding, the flange shall be refaced. In all cases, flange faces, must be free from particles of weld metal. The flange face and the pipe projecting end shall then be machined to permit both pipe and flange to bear against.

- All welding by the electric arc and gas welding process for pipe joints and fabrication shall be done by qualified welders and done according to appropriate code / regulations as applicable for welding, subject to accompanying code regulations and standards for filler metal, pressure, temperature and fluid carried. All welds shall be made in such a manner that complete fusion and penetration are obtained without an excessive amount of filler metal beyond the root area. The reinforcement shall be applied in such a

© 2022 MECON Limited All rights reserved

manner that it will have a smooth contour merging gradually with the surface of adjacent pipe and welded fittings.

01.18 THERMAL INSULATION OF PIPELINES

Thermal Insulation

The tenderer shall furnish heat insulation for all necessary equipment and piping to efficiently prevent abnormal heat loss from all exposed parts to limit surface temperature within 60 deg.C. Resin bonded mineral wool/slag wool, fiber glass, asbestos ropes and preformed pipe sections, mats/mattresses form of insulation conforming to IS:8183/IS:9842/IS:7413 will be acceptable. However, the grades shall be selected considering respective temperature. In case of using loose insulation, proper care shall be taken at site to get recommended density. Packing density of the insulation wool shall be 150 kg/m3.

Insulation shall be applied only after testing equipment and piping. Insulated surface of all equipment, piping, valves and fittings shall be covered with aluminium sheet of 22 SWG (0.8 mm thick) held in place by self tapping screws of nickel plated type. Apart from the screw, joints shall be further sealed with a suitable sealing compound. All fastening materials such as clips, wires for field weld to the equipment, galvanised wire mesh, metal corner bead shall be provided. Where valves, pipes fittings, flanges, etc. occur, a clear space between end of covering and flange shall be left of sufficient length, to permit withdrawal of flange bolts without interference. Ends of the covering at those joints shall be leveled from the outside covering to the pipe and sealed.

Flanges, valves bonnet, end flanges and fittings shall be effectively insulated. Valve & flange insulation covers shall be made in two halves so that these may be removed/refitted readily without interfering with the adjacent covering. Protrusions through the insulation which themselves do not require insulation such as pipe clamps, supports, small piping, instrument take-offs, etc. shall be covered to the same thickness as the adjacent insulation and be tightly sealed except at hanger rods. Ample provision shall be made to prevent damage of insulation due to thermal movement of the pipe or equipment. All the services to be insulated shall be cleaned of all foreign materials such as scale, rust and paint by use of steel wire brushes and steel scrapers. Anti corrosion painting (primer coat) shall be applied on hot surfaces before application of insulation

Thickness of Insulation

Table for Insulation thickness

Pipe size (outside dia)	Insulation thickness in mm for various temperature ranges					
Pipe size (outside dia)	100^0C and below	Between 101 and 200^0C	Between 201 and 300^0C	Between 301 and 400^0C	Between 401 and 500^0C	Above 500^0C

© 2022 MECON Limited All rights reserved

Upto DN 50mm	25	50	50	75	100	100
DN 65 to DN 100mm	25	50	75	100	125	125
DN 125 & DN 150mm	50	75	75	100	125	150
DN 200 mm	50	75	75	125	125	150
DN 250 mm	50	75	100	125	150	150
DN 300 mm	50	75	100	125	150	150

Note:

The metallic jacket over the insulation shall be galvanized steel sheet conforming to IS: 277 with following thicknesses:

- Pipe sizes up to 300 mm OD : 0.63 mm

- Pipe sizes up to 300 mm OD equipment, flanges, valves : 0.80 mm

01.19 LOAD CALCULATIONS AND FLEXIBILITY ANALYSIS

Load Calculations

Loads from the piping system are transferred to the pipe supports and connected equipment. Depending on the direction of application, loads shall be calculated under two major heads :

- Vertical Loads
- Horizontal Loads

Vertical load shall comprise of the following :

Platforms
Dust deposition on pipeline
Valves, compensators & fittings
Supports, ladders, etc.
- Live load on platform shall be taken as 500 kg/m^2
- Platform shall be provided at the following locations :
- Location of valves
- Location of compensators
- Location of condensate drain installation
- Water seals and tanks for water seals
- Purging and vent connections
- Manholes

© 2022 MECON Limited All rights reserved

- Instruments

Horizontal load along the axis of the pipeline shall comprise the following:

- Load due to thermal expansion
- Load due to internal gas pressure
- Load due to friction (sliding of pipes on supports)
-

Horizontal load transverse to the axis of the pipelines shall comprise the following:

- Load due to wind pressure
- Load due to component of gas pressure at branch connections
- Load due to component of force arising from thermal expansion or at change of axis in plan.
-

For calculating load due to thermal expansion the co-efficient of linear expansion for mild steel shall be taken as 0.012 mm/deg.c/ m.

Co-efficient of friction for steel to steel shall be taken as follows:

Sliding support	: 0.30
Roller support	: 0.10
Ball support	: 0.10

IS:875 shall be applicable for calculating the wind load on the stockades.
IS:1873 shall be applicable for calculating seismic load.

- The pipeline stockades shall be designed to take all vertical (dead) as well as horizontal loads.
-
- 20% extra load (vertical and horizontal) shall be considered for the design of structural and civil work to accommodate future pipeline on the stockades.

Horizontal loads due to thermal expansion, internal pressure and friction shall be calculated by carrying out flexibility analysis on individual pipe. However, wherever possible, standard software package like CEASER-II may be used for carrying out flexibility analysis and calculations of loads transmitted to supports and nozzles of equipment to which piping is connected.

01.20 LOCATION OF PIPE SUPPORTS

Supports for pipes shall be provided based on pipe layout. The unsupported span of pipeline between two supports shall be calculated on the following basis;

I) Maximum deflection in the span should not exceed 1/600 of length of the span.

© 2022 MECON Limited All rights reserved

II) Maximum stress in pipe should not exceed the limit as per design codes.

III) Maximum permissible spans are indicated below:

Maximum permissible spacing between pipe supports

Nominal Pipe size, mm	Maximum span for Liquid service, m	Maximum span for other services, m
25	2.0	2.5
40	2.5	3.0
50	3.0	4.0
65	3.5	4.0
80	5.0	4.5
100	5.0	4.5
150	5.0	6.5
200	6.0	7.0
300	7.0	9.0
500	-	13.5
600	-	15
1000	-	18
1500 and above	-	24

In specific cases where span between two supports can not be provided as per the table, alternative arrangement for intermediate support using bridge between trestles or guy rope supports may be considered. In exceptional cases where distance exceeds the limiting span, suitable stiffening of pipe section to prevent sagging may be considered.

At sliding supports pipe saddle shall be allowed to rest on bearing plate for free movement. In case U-clamps are provided, clearance shall be maintained for pipe movement by providing two nuts on opposite sides.

All intermediate supports shall be of sliding type. Anchor supports shall be located based on piping configuration and layout to provide adequate flexibility.

Distance between two consecutive fixed supports in straight runs of pipe route should be approx 70 m. However, in special cases it may go up-to 100 m (max.). In no case it should exceed 100 m.

To reduce friction force transmitted to supports, roller supports or anti friction pad supports can also be used.

01.21 FLEXIBILITY ANALYSIS

Piping arrangement shall provide for flexibility of lines to take care of the thermal expansion, contraction and equipment settlement. Large reactions or moments at equipment connections shall be avoided .

© 2022 MECON Limited All rights reserved

i) Flexibility Analysis of lines shall be carried out using simplified methods or a comprehensive computer program. Comprehensive computer analysis shall be carried out for the piping for lines connected to equipment like vessels, pumps, filters, furnace, compressors or other strain sensitive equipment. The result of the analysis must satisfy the allowable loading on the nozzles of such equipment.

ii) Piping shall be adequately supported for the weight of piping, water, attached unsupported components, wind, seismic, insulation and any other applicable forces. Care should be taken that these supports are adequate to prevent excessive stress, load or moments in either the piping or terminal nozzles of the equipment to which it is connected. Adequacy of supporting of lines having heavy valves shall be checked. The support shall be indicated in the piping General Arrangement Drawings and Isometrics as applicable.

iii) Safety valve manifolds and downstream of control valves shall be adequately supported to avoid vibrations.

iv) The following factors shall be considered in the stress analysis

- Friction for lines >= 8” NB ; @ steel to steel = 0.3: (Sliding friction), @ steel to Steel =0.1 (Rolling friction),
- Corrosion Allowance.
- Initial displacement of nozzles at design temperature(s).
- Transverse deflections =25 mm(maximum)
- Longitudinal expansion/contraction = 200 mm (maximum) Special care to be taken to check for expansion loops and shoe support lengths shall be finalized accordingly.

v) The following shall always be analyzed using comprehensive computer analysis:

a) All lines 4” and above and Design Temp.> 300 deg. C.
b) All lines 8” and above and Design Temp. > 150 deg. C.
c) Al l lines 16” and above and Design Temp. > 80 deg. C.
d) All lines 6” and above and Design Temp. > deg. 65 C that are connected to rotating Equipment, Air Coolers or any other sensitive equipment.
e) Any other system/line that stress engineer feels necessary for stress check.

The report shall comprise of the following:

- Basic input data and calculated conditions.
- Layout isometric and supports configuration.
- Load cases and calculated member stresses.
- Forces, moments and displacements reports.
- Spring hangers design parameters.

© 2022 MECON Limited All rights reserved

- Allowable Stress Range.
- Additional requirements (reinforcement pad etc.)

WIND LOAD CALCULATION

Wind pressure shall be taken as per IS : 875. In cyclone prone areas maximum wind pressure due to cyclonic wind pressure shall be taken.

In case of multiple pipes, for each tier of pipes, largest pipe may be considered for calculating wind load.

01.22 **Erection of pipelines**

01 General

Before erection, the equipment, valves and other fittings to be mounted on pipelines/ equipment should be dismantled, (only if required), cleaned, oiled and reassembled. Glands shall be packed with suitable materials as per approved drawings.

- All elements of the pipelines system shall be erected at site strictly as per the drawings approved by the Purchaser / Consultant.
- Any modification to be carried out at site, shall have the prior approval of Purchaser / Consultant's representatives.
- While erecting, pipelines shall rest uniformly on each support. Yokes, if provided, shall not allow lateral movement of pipes.
- Matching faces of flanges shall be perpendicular to the axis of pipelines. Use of gaskets of unusual thickness to fill gap between flanges shall not be allowed.
- For horizontal pipes, the flanges shall be erected such that top two bolt holes are displaced by half pitch from the vertical axis of the flange.
- Flanges of adjoining pipes shall be located in staggered manner.
- Flanged joints shall be laid as close to the support as possible.
- For insulated pipe, steel protectors for the insulation shall be provided at points where the pipe is supported on rollers, slides or other equipment where contact with such members is required outside the insulation.
- In case the location of spindle wheel of valves is not clearly shown in the erection drawings, the same shall be located in a manner as to facilitate easy operation from ground level of nearest operating platform.
- For making pipe bends/ elbows at site using hot/ clod bending process, the decrease in the pipe thickness shall not be more than 15% of the pipe thickness.

© 2022 MECON Limited All rights reserved

- After erection of pipelines, the holes made in the walls shall be covered with bricks & mortar. A gap of 10 to 20 mm shall be kept between wall and the pipe for the movement due to thermal expansion. The gap shall be filled with felt/ asbestos.
- Holes made in the roof shall be covered with removable CGI sheets.
- The trenches for pipes shall be covered with removable chequered plate covers/ concrete slabs as per the drawings.
- All pipeline branches not connected to equipment shall be closed using blank flanges and gaskets.

02 Welding of pipelines

- All pipelines shall be joined by welding. Flanged joints shall be used for connecting the pipe with equipment, valve or fitting.
- Electric arc welding shall be used for joining pipes, support, structures, etc.
- All manufactured pipes shall be joined by butt welding. Large dia pipes, fabricated from sheets, shall be joined by fillet welding using semi-bandages attached to each section being joined.
- Welding shall be done by qualified welders. Code of practice as per relevant Indian Standards & statutory regulations shall be followed for the welding procedure, use of electrodes, etc.
- Proper edge preparation and preheating of edges to be welded, whenever required, shall be ensured before welding.
- After every 50 butt welded joints of gas pipeline, one test sample shall be welded by the same welder. Tensile teat and bend test shall be performed as per IS :814 to check the strength of welding. Four test samples shall be made from the test piece, two each for tensile and bend test.
- Tensile strength shall not be less than 34 kg / mm2 and elongation less than 12 %.
- Angle of bend at the appearance of first crack shall not be less than 70 deg.
- Visual inspection shall be done for all welded joints to check for following possible defects :

  Surface cracks on weld metal or parent metal.

  Fusion or cuts at the joining of weld metal and parent metal.

  Sponginess or porosity on the surface of weld.

  Non-uniform thickness or distortion in case of fillet welds.

  Deviation in the pipe axes or dimension of the joint.
- All defective spots found shall be chipped off and re-welded.

© 2022 MECON Limited All rights reserved

- For high pressure pipes, radiographic examination of welds shall be carried out as per IS : 2825.

03 Link lengths and tolerances

- Straight sections of gas pipelines shall be manufactured as separate links and joined at site by butt welding.
- Link lengths for pipes shall be as follows :
  - a) Up to 13 m : for pipes with dia 1400 mm or less.
  - b) Up to 26 m : for pipes above 1400 mm dia.
- Following tolerances are allowed :

i) For length of links :

a) +/- 3 mm for length up 1 m

b) +/- 0.5 % for length more than 1 m, total deviation shall not exceed 10 mm for every 10 m or part thereof .

ii) Deviation in the pipe axis from the straight line :

Upto 0.12% of the link length but not more than 15mm for links with length more than 10 m. Deviation shall be checked by stretched cord.

iii) For distance between the contacting surfaces from the geometrical axis for bends, tees, crosses and other pipe fittings.

+/- 3 mm for distance upto 500 mm .

+/- 0.5% or 10 mm maximum for distance more than 1 m.

However, for BF gas and CO gas pipelines, the tolerance shall be limited to +/- 1.5 mm only.

iv) Deviation of pipe axes at the joining point from the diametral plane of pipes:

2 mm, irrespective of link length.

v) For distance between two adjacent connections on a pipe :

+/- 2 mm for each length but not more than +/- 5 mm overall.

vi) Distortion of the contacting surface of flange relative to the geometrical plane perpendicular to the pipe axis :

0.004 times the outer diameter of the flange at the periphery.

vii) Tolerance for clearance between flanges and flange rings :

Not more than 2 mm.

04 Erection of valves and fittings

- Before erection, the valves, cocks and other fittings, to be mounted on pipelines, shall be dismantled, cleaned, oiled and reassembled. Glands shall be packed with suitable materials as per approved drawings.

© 2022 MECON Limited All rights reserved

- All moving parts of the pipe fittings should move freely without jamming.
- Valves shall be tested hydraulically for leakage by applying pressure on up stream side with valve in closed position.
- Bolts & nuts shall be cleaned and lightly oiled.
- Proper grades of gaskets shall be used for erection as per approved drawings.

05 Testing of pipelines

Preliminary acceptance test for erected pipelines shall be carried out as follows :

a) Checking of metal marked as per manufacturer's certificate/ approved drawings.

b) Checking of test result of mechanical tests for welding/ radiographic tests.

c) Visual examination of welds.

d) Dimensional checks as per the approved erection drawings.

e) Checking of welded joints by chalk kerosene test.

- In case defects are found by visual examination, these shall be rectified prior to leakage test.
- Checking of proper installation of supports, expansion joints, valves and fittings.
- The pipeline shall be cleaned from inside, all debris removed and pipeline blown with air to remove all dirt, rust particles, etc.

Strength and leakage test for pipelines :

1. Test fluid for Compressed air and instrument air shall be water.

2. For compressed air test pressure shall be 1.25 times the maximum working pressure.

3. For compressed air strength test shall be carried out by maintaining the test pressure indicated above for a minimum period of 1/2 hour.

4. During pneumatic leakage test, pressure shall be gradually reduced to 1.1 times the operating pressure to check the leakage by soap solution. Test duration shall be minimum 2 hours. Soap solution shall be applied to the weld surfaces / flanges to check for any leakage. Any defect found shall be rectified after releasing the test pressure and after rectification of defects the test shall be repeated. During pneumatic tests of all gas pipelines pressure and temperature readings shall be taken at the beginning and end of the test. The percentage pressure drop (P) shall be calculated as follows :

© 2022 MECON Limited All rights reserved

$$P = 100 (1 - P2 / P1 X T1/ T2)$$

Where P1 and P2 are absolute pressure in the pipe at the beginning and end of test and T1 and T2 are absolute temperature at the beginning and end of the test. The maximum allowable pressure drop in all gas pipelines shall not exceed 1.0 % per hour for outdoor pipelines during pneumatic test. For pipeline subjected to hydro test, no leakage is permissible

7 Pipelines shall be commissioned only after successful completion of preliminary acceptance test, strength tests and leakage tests.

All valves and regulating devices shall be checked for smooth & proper operation.

All safety relief valves shall be checked and set at required pressure setting.

All instruments, interlocks, etc., shall be checked.

01.23 <u>Erection of Oxygen pipelines</u>

01 General

- All work concerning oxygen pipeline system shall be done by persons of contractor well conversant with the oxygen service and having proven ability in the field.
- All safety aspects with regards to selection of materials, erection procedure, degreasing, testing and commissioning procedures, cleanliness, etc. shall be kept in view by all personnel connected with the job.
- Erection of pipes, fittings, instruments, etc. shall be done strictly as per the approved drawings. Any change proposed to be done at site shall have the approval of the Purchaser's/ Consultant's representatives.

02 Routing of oxygen pipes

- Oxygen pipes can be laid along with other pipes on same stockades. Oxygen pipeline shall have independent support from the same stockade.
- Clear distance of 300 mm shall be kept between oxygen pipe and any other pipe.
- In-shop pipes can be laid along the wall and can be supported from building structures, crane girders etc. by independent brackets, hangers, etc.
- Pipelines laid in trenches shall be covered with sand/ earth.
- Oxygen pipeline shall not be laid in tunnel/ basements. In case, it is necessary to pass the pipeline through a tunnel, an encasing pipe shall be provided on oxygen line extending 1.0 m on both the ends of the tunnel.
- A clearance of 500 mm shall be kept between oxygen pipe and electrical cables and in case of bare conductors, the clearance shall be 1000 mm.

© 2022 MECON Limited All rights reserved

- Oxygen pipelines crossing the walls/ floors shall also have encasing pipe. The gap between the pipe and casing shall be filled with non-inflammable material allowing movement of the pipe.
- Oxygen pipelines shall be effectively earthed, Jumpers of minimum 5 mm diameter shall be proved at all flanged joints.

003 Materials

- All materials supplied for erection shall have manufacturer's test certificates including materials test and hydraulic test reports.

004 Cleanliness

- All steel pipes & fittings shall be pickled at the manufacture's works or at site prior to degreasing.
- In case, pickling is done at manufacturer's work, the ends of pipes shall be sealed/ plugged, and then pipes packed and tagged 'pickled for oxygen service' before despatch.
- Pickling shall be done using HCL of 20% concentration (w/ w). After pickling, pipes shall be washed with water, neutralised with 0.25% NaOH solution and again washed with water.
- Before erection, the pipes & fittings shall be visually inspected for presence of scales/ foreign matter like fillings, flux, corrosion products, dirt, wood and metal chips, threading compounds, sealants, tar asphalt, moisture, paint, chalk, etc.
- The pipe work shall be thoroughly cleaned to ensure removal of all foreign matter.
- Presence of grease or oil shall also be checked visually. Inside surface of pipes shall be checked by passing clean white cotton piece.

Hands, clothes and aprons of the workers doing erection job shall be clean and free of oil and grease.

005 Degreasing

- Before erection, all pipelines, fittings, valves, gaskets, packing material, instruments etc. shall be degreased using proper solvent like trichloroethylene. For initial degreasing detergent made by mixture of sodium hydroxide trisodium phosphate and calcium sodium silicate can be used.
- The quality of the solvent used for degreasing shall be checked before its application.
- The parts to be degreased should be cleaned and dried by blowing air.
- Outer surface of pipes is degreased by wiping with cloth dipped in solvent and then dried till smell of solvent disappears.
- For degreasing inner surface of pipes, pipe shall be plugged at one end, filled with solvent and closed at the other end. Pipe shall be kept in horizontal position, rotated about axis at least once in a minute. After

© 2022 MECON Limited All rights reserved

continuing the process for about 15 minutes, the solvent shall be drained and pipe blown with dry oil free air or nitrogen for at least 5 minutes.

- Drying after degreasing can also be done in open air for at least 24 hours.
- Vapour degreasing method can also be applied for pipes.
- For degreasing of valves, fittings and other components, the same shall be dismantled and parts dipped in solvent for 5 to 10 minutes. After degreasing, the parts shall be dried in open air till smell of solvent is eliminated.
- Gaskets and packing material shall be degreased by dipping in solvent for 1.5 to 2 hours after which these shall be dried in open air for 24 hours.
- Degreasing operation shall be done in open air.
- The workers should use safety masks to prevent hazards due to inhaling of the solvent vapours. Solvent contact with skin shall also be avoided.
- Safety aspects regarding handling of solvents shall be kept in mind during degreasing process.
- Degreasing process shall be complete when the desired solution shows zero oil content.

006 Erection

- Erection of oxygen pipelines shall be done as per approved drawings and general guidelines for erection of pipelines.
- Gas welding or electric arc welding shall be used for erection of pipelines. Welding shall be done by qualified welders.
- Radiographic examination of 100% welds for oxygen pipelines with working pressure over 6 kgf/ cm^2 (g) and OD above 76 mm shall carried out. Interpretation of radiographs shall be done by a competent agency like Lloyds Register of Shipping. Proper identification marking for welds and their corresponding radiographs shall be carried out by the contractor.
- For pipelines having working pressure below 6 kgf/ cm^2 (g), 40% welds shall be tested by radiography.
- Cleanliness of personnel as well as tools and tackles shall be ensured.

007 Testing

- All erected pipelines shall be tested for strength and leakage using dry and oil free air or nitrogen.
- Before testing, the pipeline shall be degreased by vapour degreasing method.
- After degreasing, the pipelines shall be blown with dry and oil free nitrogen. During blowing, velocity in the pipeline shall not be less than 20 m/ sec.

© 2022 MECON Limited All rights reserved

- Blowing shall be done for a period of at least 1 hour to remove all particles of dust, scale etc. from the system. Cleanliness shall be checked by holding a piece of white paper at the air outlet.
- After blowing, the line shall be pressurized up to 1.25 times the maximum working pressure using air/ nitrogen. The test pressure shall be held for 30 minutes during which the joints shall be lightly tapped with a wooden hammer of 1.5 kg weight.
- Pressure shall be gradually reduced to the operating pressure and all joints checked by soap solution for leakage. If any leakage is detected, line shall be depressurized and defect rectified.
- Leakage test for the pipeline system shall be done at operating pressure for a period of 24 hours. During this period, pressure and temperature readings shall be taken at an interval of 1 hour. Duplicate gauge with least count of 0.1 kg/ cm2 for pressure and 0.5 deg. C for temperature shall be used.
- The percentage pressure drop (P) shall be calculated as follows :

$$P = 100 (1 – P2/ P1= * T1/ T2)$$

Where P1 and P2 are pressure in the pipe at the beginning and end of test and T1 and T2 are absolute temperatures at the beginning and end of the tests.

- Leakage of air / nitrogen determined by above formula shall not exceed 0.2% per hour.
- After satisfactory completion of leakage test, the pipeline shall be isolated and kept under pressure of 1.0 kg/ cm^2 till the line is commissioned.

008 Commissioning

- Before charging the pipeline with oxygen, the line shall be blown with dry, oil free air/ nitrogen at a velocity of minimum 20 m/ s for a period of at least 8 hours. Cleanliness of outlet air shall be checked by holding a piece of white paper for 3 to 5 minute at air outlet. If dust particles are found on the paper, blowing shall be continued till paper test shows negative results.
- After completion of blowing, oxygen shall be introduced gradually increasing the oxygen percentage in the pipe. The velocity of oxygen flow shall be limited to 10 m/ s till all air/ nitrogen is exhausted from the pipe.
- Oxygen shall be vented through bleeders in open atmosphere at a safe place away from open flames/ fire. Minimum height of bleeder outlet shall be 2.5 m from ground/ platform level or shop roof.
- After charging the line completely with oxygen, bleeder valves shall be closed and line may be put into service.

009 Safety

- Testing, cleaning and commissioning of oxygen pipelines shall be carried-out only in the presence of and with the permission of senior engineers of the and the Consultant.

© 2022 MECON Limited All rights reserved

- The safety department of the shall be informed and their concurrence taken on all matters related to cleaning, testing and commissioning of oxygen pipe lines.
- All first aid and fire fighting facilities should be readily available.
- During testing of pipelines by air, the area shall be cordoned off and clear working placards shall be displayed.
- All safety precautions shall be observed in storage and handling of solvents.

010 Passing and acceptance of pipelines

Prior to passing and acceptance of pipelines for operation they shall be inspected with the view to check that all civil, structural, erection and special works are completed.

Before handing over the pipelines for operation, the Contractor shall provide the following technical documents.

001 Certificates of inspection, degreasing and testing of fittings, pipe joints and parts.

002 Certificate on the inspection of internal cleanliness of pipes.

003 Certificates on pipe, flanges, plugs and welding material.

004 Copies of the welder`s certificates.

005 Results of mechanical testing of samples.

006 Certificate on testing of pipelines for strength and leaks.

007 Principal scheme of pipelines with indications of welded butts and labels.

01.24 PAINTING

Painting of pipelines shall be carried out as per IPSS code.

01.25 PIPING MATERIAL SPECIFICATION

SCOPE

This PMS covers the various piping specification for process and utility piping in Metallurgical plants and its related industrial Installation.

REFERRED CODES & STANDARDS

All piping shall be designed in accordance with relevant latest codes and standards like B 31.1, B 31.3 and different IPSS (Inter plant standard for steel industry)

© 2022 MECON Limited All rights reserved

Individual piping material specification has been designed to cover a set of services operating within fixed pressure and temperature.

PIPES

Pipe dimension shall be in accordance with ANSI B36.10 : IS:1239, IS:3589 for carbon steel pipe and to B36.10/B36.19 for stainless steel pipe.

Pipe made by acid Bessemer process shall not be acceptable. Pipes shall be made by open hearth, electric furnace or basic oxygen process.

All pipe threads shall conform to ANSI B1.20.1 except where otherwise noted.

FLANGES

Flanges shall be in accordance with following codes except where otherwise noted.

DN 15 to DN 600 (150 # - 600#) ANSI/ANSI B16.5 / IS : 6392
Above DN 600 API 605 / ANSI B16.47 / MSS-SP-44/IS:6392/DIN etc.

Flanges to MSS-SP-44 or any other std. like DIN, BS etc. may be specified to be made with equipment or valve flanges with corresponding bolting.

Finish of steel flange faces shall conform to MSS-SP-6/ ASME B46.1/ASME B16.5. The interpretation shall be as follows :

Serrated	:	250 – 500 Mu in AARH
Smooth (125 AARH)	:	125 – 250 Mu in AARH
For RTJ groves (32 AARH)	:	32 – 250 Mu in AARH

Bore of WN flanges shall match the ID of the attached pipe Bore of slip on flanges shall suit the pipe OD and its thickness.

Dimensions of welded steel flanges for low pressure gas (Pressure upto 1 kg/cm^2) is indicated in Table 06.01

FITTINGS

Forged steel socket welded and threaded fittings shall be in accordance with ANSI B 16.11 unless otherwise noted.
Butt welded fittings shall be in accordance with ANSI B16.9 unless otherwise noted.
Fabricated (site/factory) fittings shall conform to IPSS-06-020-95 unless otherwise specified. Fittings thickness and tolerance shall match pipe thickness and tolerance.

© 2022 MECON Limited All rights reserved

Mitres and reducers fabricated from pipe may be used if specified in PMS. Same shall conform to IPSS:1-06-020-95. In no case, thickness of mitres and material shall be inferior to parent pipe.

GASKETS

Non metallic gasket shall conform to IS:2712.

Spiral wound gaskets (SPR, WND) shall conform to API 601/B16.20.

Ring type and spiral wound gasket shall be self aligning type.

BOLTING

Dimensional std of Bolt/studs and nuts shall conform to B 18.2 / IS:1364-1992 unless otherwise noted.

THREADS

Threads for threaded pipes, fitting, flanges and valves shall be in accordance with B1.20.1 taper threads unless otherwise noted.

Upto 200^0C threaded joints shall be made with 1” width PTEE joining tape.
Above 200^0C threaded joints shall be seal welded with full strength fillet weld.

All threaded joints irrespective of pressure and temperature on lines carrying toxic fluid shall be seal welded with a full strength fillet weld.

VALVES

Face to Face/End to End dimension of valves shall conform to B16.10 to the extent covered. For valves not covered in B16.10. reference shall be made to BS2080 and / or the manufacturer’s drawings.

Flange / weld ends of the valve shall be as per the corresponding Flange/Fitting ends of the piping class, unless otherwise specified.

Pressure temperature rating for flanges and butt welding end valves shall be as per ANSI B16.34 except for ball, plug & butterfly valves. For these valves refer TABLE FOR PRESSURE TEMP. RATING FOR BALL, PLUG AND BUTTERFLY VALVES

Unless called-out specifically, valves shall be as per the following Standards.

Valve	Size DN mm	Rating	Des. Std.	Testing Std.

© 2022 MECON Limited All rights reserved

Gate	15 - 40	800/1500	API-602	API-598
Globe/Check	15 - 40	800/1500	BS – 5352	BS-6755 Pt-I
Gate	50 - 600	150/300/600	API-600	API-598
Gate	650 - 1050	150/300	BS-1414	BS-6755 Pt-I
Globe	50 – 200	150/300/600	BS-1873	BS-6755 Pt-I
Check	50 – 600	150/300/600	BS-1868	BS-6755 Pt-I
Gate/Globe/ Check		900/1500/2500 #	B-16.34	API-598/ BS6755 Pt-I
Ball	15 – 400		BS-5351	BS-6755
Plug	15 – 300		API-599	API-598 /BS-5353 BS-6755
Butterfly	80 & above	-	API-609/ BS5155 AWWA C504	API-1898/ BS-6755 Pt-I /AWWA
Diaphram	ALL	-	BS-5156	BS-6755 Pt-I

If not covered above, the valve shall be as per B16.34 and relevant MSS SP Standard

DN 50mm and larger steel Gate, Globe & Check valves in Hydrocarbon and utility service shall have bolted bonnets. Pressure seal bonnets or covers shall be used for Class 900# and above to minimize bonnet leakage. However, valves with pressure seal bonnet shall have wall thickness & seal stem diameter as per API600. Welded bonnets or screwed & seal welded bonnets are acceptable for sizes lower than DN 50 for Class 900# & above.

PIPING MATERIAL SPECIFICATION	
A. SERVICE : MEDIUM PRESSURE COMPRESSED AIR	
SERVICE CONDITIONS : Maximum Operating Pressure 10.5 kgf /cm2 Temp 60 ^{o}C Minimum Operating Pressure Atm Temp 5 ^{o}C CORROSION ALLOWANCE : 1.5 m.m.	

© 2022 MECON Limited All rights reserved

Item	Size Range	Description	Dimensional/ Design Standard	Material - Carbon Steel
Pipe	DN 15 to 40	ERW, PE Sch. HEAVY	IS:1239 – part-1	IS:1239 BLACK
	DN 50 to 150	ERW, BE Sch. HEAVY	IS:1239 – part-1	IS:1239 BLACK
	DN 200 to 350	ERW, BE , THK 6.0mm	IS:3589	IS:3589 GR.330
	DN 400 to 500	ERW, BE , THK 8.0mm	IS:3589	IS:3589 GR.330
	DN 550 to 600	ERW BE Thk. 10.0mm	IS:3589	IS:3589 GR.330
	DN 650 & above	ERW/ SAW, BE Thk. 10.0mm (min)	IS:3589	IS:3589 GR.330
Fittings	DN 15 to 40	SW / Screwed Fittings # 3000 (Elbow R=1.5D)	ANSI B 16.11	ASTM A 105
	DN 50 to 150	BW Fittings #150 (Elbow R=1.5D))	ANSI B16.9	ASTM A234 Gr WPB
	DN 200 & above	Miter bends & fittings fabricated from pipe	IPSS-1-06-020	Same as parent pipe
Flanges	DN 15 to 40	SW:RF : Serrated Finish #150	B 16.5	ASTM A 105
	DN 50 and above	SORF : Serrated Finish #150	IS:6392 Table-11	IS:2062 Grade B
Gaskets	All sizes	Gasket : Thk. 2.0 mm Ring type CAF	B 16.21	IS : 2712 Gr W/3
Valves Isolation	DN 15 to 40	Gate valve SW # 800	API 602	Body ASTM A105 ; 13% CR Trim
	DN 50 and above	Gate valve Flanged RF Serrated Finish # 150	API 600	Body ASTM A216 Gr. WCB 13% Cr Trim
Throttling	DN 15 to 40	Globe valve, SW # 800	BS 5352	Body ASTM A105; 13% Cr Trim
	DN 50 and above	Globe valve : Flanged RF Serrated # 150 finish	BS 1873	Body A216 Gr.WCB 13% Cr Trim
Non-Return	DN 15 to 40	Check valve SW # 800 Lift type	BS 5352	Body ASTM A105; 13% Cr Trim

© 2022 MECON Limited All rights reserved

Item	Size Range	Description	Dimensional/ Design Standard	Material - Carbon Steel
	DN 50 and above	Check valve flanged RF Serrated finish # 150	BS 1868	Body ASTM A216 Gr.WCB 13% Cr Trim
Bolting	All	Studs / Bolts Nuts	B 18.2 B 18.2	ASTM A307 Gr B ASTM A563Gr B
Miscellane-ous	DN 15 to 40	TRAP #150, THRMODYNAMIC	MANF' STD.	BODY A105, TRIM 13% CR , S: SS304
	DN 15 to 40	STRAINER, SW, Y Type	MANF' STD.	BODY ASTM A105 : INT SS 304
	DN 50 and above	STRAINER, BW, T Type	MANF' STD.	BODY A234WPB : INT SS 304
Piping Fabrication	Flanged Joints	At valve/ equipment location and for sectionalizing & maintenance To be kept minimum		
	Pipes Joints	Butt Welded		
	Pressure Tapping	DN 20 – SW half coupling Sch 80 Nipple with Gate valve to spec.		
	Temp Connections	DN 40 – Flanged set-on nozzle		
	Vents	On lines <= DN 40 ; MEC std.		
	Drains	On lines <= DN 40 ; MEC std.		

PIPING MATERIAL SPECIFICATION

B. SERVICE : INSTRUMENT AIR

SERVICE CONDITIONS : Maximum Operating Pressure Up to 10.55 kgf /cm2 Temp 65°C

RATING : # 150
Matching Companion Flanges of Valves & flow components as per corresponding rating.

CORROSION ALLOWANCE : 1.5 mm

© 2022 MECON Limited All rights reserved

Item	Size Range	Description	Dimensional/ Design Standard	Material - Carbon Steel
Pipe	DN 15 to 40	ERW ; Screwed end HEAVY	IS:1239, Part-I	IS:1239 (PART-I) GALV.
Fittings	DN 15 to 40	Screwed Fittings # 3000	ANSI B 16.11	ASTM A 105 (GALV.)
Flanges	DN 15 to 40	Screwed :RF : Serrated Finish #150	B 16.5	ASTM A 105 (GALV.)
	DN 15 to 40	Blind Flanged RF : Serrated Finish #150	API 590	ASTM A 105 (GALV.)
	DN 50 and above	Flange ; FF Serrated Finish #150	B 16.5	ASTM A 105 (GALV.)
Gaskets	All sizes	Gasket : Thk. 2.0 mm Ring type	B 16.21	IS : 2712 Gr W/3
Valves Isolation	DN 15 to 40	Gate valve SCRF; # 800	API 602	Body ASTM A105 ; 13% CR Trim
Throttling	DN 15 to 40	Globe valve, SCRF; # 800	BS 5352	Body ASTM A105; 13% Cr Trim
Non-return	DN 15 to 40	Check valve SCRF; # 800 Lift type	BS 5352	Body ASTM A105; 13% Cr Trim
Bolting	All	M/C BOLT	B 18.2	ASTM A307 Gr B (GALV)
		Nuts	B 18.2	ASTM A563 Gr B, (GALV)
Piping Fabrication	Flanged Joints			
	Pipes Joints	Screwed Coupling		
	Temp. Conn.	Flanged Installation as MEC std.		
	Pressure Tapping	DN 20 – SW half coupling Nipple HEAVY with Gate valve to spec.		
	Vents	MEC std.		
	Drains	MEC std.		

PIPING MATERIAL SPECIFICATION

C. SERVICE : MEDIUM PRESSURE OXYGEN

SERVICE CONDITIONS : Maximum Operating Pressure 16 kgf /cm2 Temp 60 ^{o}C

CORROSION ALLOWANCE : 2 m.m.

Cleaning, Pickling, Passivation & Degreasing As Per IGC / IPSS code

© 2022 MECON Limited All rights reserved

Item	Size Range	Description	Dimensional/ Design Standard	Material - Carbon Steel
Pipe	DN 6 to 10	Seamless Tube		Deoxidized non-Arsenic Copper or Aluminum
	DN 15 to 40	Seamless PE Sch. 80	B 36.10	Carbon Steel, ASTM A106 GR.B
	DN 50 to 150	Seamless BE Sch.40	B36.10	ASTM A106 GR.B
	DN 200 to 300	Seamless BE Sch.40	B36.10	ASTM A106 GR.B
	DN 350 to 600	Seamless BE Sch.40	B36.10	ASTM A106 GR.B
Fire Breaker	DN 50 to 150	Copper Pipe	B36.10	Deoxidised non Arsenic Copper
	DN 200 to 600	Copper Pipe	B36.10	Deoxidised non Arsenic Copper
Fittings	DN 15 to 40	SW Fittings # 3000	ANSI B 16.11	ASTM A 105
	DN 50 and above	BW Fittings	ANSI B16.9	ASTM A234 Gr WPB
Flanges	DN 15 to 40	SW:RF : Serrated Finish	B 16.5	ASTM A 105
	DN 50 above	WNRF : Serrated Finish	B 16.5	ASTM A 105
Gaskets	All sizes	PTFE LOX GRADE	B16.21	
Valves	DN 15 to 40	Ball valve class 800 for isolation purpose Flanged ends (class 300)	BS 5351	Body A182 GR. 304; /BRONZE ;13% Cr Trim / BRONZE
	DN 50 and above	Ball valve class 300 for isolation purpose Flanged ends (class 300)	API 600	Body A351 GR. CF8; /BRONZE ;13% Cr Trim / BRONZE
	DN 15 to 40	Globe valve class 800 for throttling purpose, flange end (class 300)	BS 5352	Body : Bronze Trim: Bronze
	DN 50 and above	Globe valve class 300 for throttling purpose with flange end	BS 1873	Body : Bronze Trim: Bronze
	DN 15 to 40	Check valve class 800 with flanged end class 300	BS 5352	Body A182 GR. 304; /BRONZE ;13% Cr Trim / BRONZE
	DN 50 and above	Check valve class 300 with flanged end	BS 1868	Body A351 GR. CF8; /BRONZE ;13% Cr Trim / BRONZE
	DN 15 & Above	Ball valve flanged RF Serrated finish	BS 5351	Body A351 GR.CF8 ; A182 GR. 304 Trim;PTFE Seat
PIPING MATERIAL SPECIFICATION				
D. SERVICE: HIGH PRESSURE OXYGEN				

© 2022 MECON Limited All rights reserved

SERVICE CONDITIONS : Maximum Operating Pressure 40 kgf /cm2 Temp 60 ^{o}C
Minimum Operating Pressure 16 kgf /cm2 Temp 5 ^{o}C

RATING : # 300
Matching Companion Flanges of Valves & flow components as per corresponding rating.

CORROSION ALLOWANCE: 2 m.m.
Cleaning, Pickling, Passivation & Degreasing As Per IGC / IPSS code

Item	Size Range	Description	Dimensional/ Design Standard	Material - Carbon Steel
Pipe	DN 6 to 10	Seamless tube		Deoxidized non-Arsenic copper or Aluminum
	DN 15 to 40	Seamless PE Sch. 80	B 36.10	Carbon Steel, ASTM A106 GR.B
	DN 50 to 150	Seamless BE Sch.40	B36.10	ASTM A106 GR.B
	DN 200 to 250	Seamless BE Sch.40	B36.10	ASTM A106 GR.B
	DN 300 to 600	Seamless BE Sch.40	B36.10	ASTM A106 GR.B
Fire Breaker	DN 50 to 150	Copper Pipe	B36.10	Deoxidised non Arsenic Copper
	DN 200 to 600	Copper Pipe	B36.10	Deoxidised non Arsenic Copper
Fittings	DN 15 to 40	SW Fittings # 3000	ANSI B 16.11	ASTM A 105
	DN 50 and above	BW Fittings	ANSI B16.9	ASTM A234 Gr WPB
Flanges	DN 15 to 40	SW:RF : Serrated Finish;	B 16.5	ASTM A 105
	DN 50 and above	WNRF : Serrated Finish	B 16.5	ASTM A 105
Gaskets	All sizes	PTFE LOX GRADE	B16.21	
Valves	DN 15 to 40	Ball valve class 800 for isolation purpose flanged ends (class 300)	BS 5351	Body A182 GR. 304; /BRONZE ;13% Cr Trim / BRONZE
	DN 50 and above	Ball valve class 300 for isolation purpose flanged ends (class 300)	API 600	Body A351 GR. CF8; /BRONZE ; Trim:13% Cr / BRONZE
	DN 15 to 40	Globe valve class 800 for throttling purpose, Flanged ends (class 300)	BS 5352	Body: Bronze Trim: Bronze
	DN 50 and above	Globe valve class 300 for throttling purpose, Flanged ends (class 300)	BS 1873	Body: Bronze Trim: Bronze

© 2022 MECON Limited All rights reserved

Item	Size Range	Description	Dimensional/ Design Standard	Material - Carbon Steel
	DN 15 to 40	Check valve class 800, with flanged ends (class 300)	BS 5352	Body A182 GR. 304; /BRONZE ;trim 13% Cr / BRONZE
	DN 50 and above	Check valve class 300 with flanged ends	BS 1868	Body A351 GR. CF8; /BRONZE ; Trim:13% Cr / BRONZE

© 2022 MECON Limited All rights reserved

UTKARSHA ALUMINIUM DHATU NIGAM LIMITED

ESTABLISHING FACILITY FOR ALUMINIUM ALLOY MELTING, SLAB CASTING AND FLAT ROLLED PRODUCTS PRODUCTION FACILITY

GENERAL TECHNICAL SPECIFICATION FOR ELECTRICS, DRIVES & CONTROL, FDA & TELECOMMUNICATION (GS – 03)

MECON LIMITED
RANCHI - 834002

No. MEC/S/11/35/Q7R6/GTS/01/R0 **JUNE, 2022**

GS - 03	PART - I	ELECTRICS, DRIVES & CONTROL	
		SECTION– A	DESIGN BASIS
		SECTION- B	EQUIPMENT SPECIFICATION
		SECTION- C	EARTHING, LIGHTNING PROTECTION, ERECTION&TESTING
GS - 03	PART - II	PLANT COMMUNICATION, CCVM & FIRE DETECTION AND ALARM SYSTEM	

REV. NO.	DATE	PREPARED	CHECKED	APPROVED
0	June, 2022			

UTKARSHA ALUMINIUM DHATU NIGAM LIMITED

GENERAL TECHNICAL SPECIFICATION FOR ELECTRICS, DRIVE & CONTROL DESIGN BASIS (GS 03 PART-I SECTION- A)

MECON LIMITED
RANCHI – 834 002

No. MEC/S/11/35/Q7R6/GTS/01/R0 **JUNE' 2022**

© 2022 MECON Limited All rights reserved

LIST OF CONTENTS

PART –I:SECTION - A

DESIGN BASIS(FOR ELECTRICAL EQUIPMENT& SYSTEM)

Clause No.	Contents	Page No.
1.01	General	1
1.02	Standards	1
1.03	Environmental Conditions, Design Ambient & De-rating considerations	2-3
1.04	Standard Voltage levels	3-4
1.05	Symmetrical short circuit ratings	5
1.06	Permissible variations in power supply	5
1.07	Criteria for selection of voltage levels for motors & Power devices	6
1.08	Power Distribution system design	7-8
1.09	HT VCB for Local Isolation and control of Distribution Transformer	8
1.10	Distribution Transformer& its sizing	9
1.11	LT Busduct& its ratings	9
1.12	415 V Power Control Centres (PCC) & ratings of its feeders	9-10
1.13	Maximum Demand of MCC, PDB, ACDB	10-11
1.14	Selection & Configuration of incomers for MCC/PDB/MLDB	11-12
1.15	Outgoing Feeder Selection for MCC, Local Starter Panel, Local standalone CP	12
1.16	Rating Selection of Variable Speed AC Drives.	12-13
1.17	Mitigation of Harmonics in system design	13
1.18	Relay Co-ordination & Relay Setting Calculation	14
1.19	Uninterrupted Power Supply (UPS)	14-15
1.20	Selection of Cables	15-17
1.21	Cable Laying, Cable floors& Routes	17-18
1.22	Ventilation and Air Conditioning	18-21
1.23	Control Philosophy	21-24
1.24	Spares Philosophy	24-25
1.25	Guidelines for design and engineering the layout of electrical premises.	25-33
1.26	Colour Coding of Equipment	34-35
Appendix -1	**Table -1A** Selection of Power Components, Wiring & Cable sizes for Continuous Duty Cage Motor Drives	36
Appendix -2	Signal Exchange Diagrams	37-43
Appendix -3	List of abbreviations	44-46

© 2022 MECON Limited All rights reserved

1.01 General

This General Technical Specification (GTS) part shall be read in conjunction with Package Technical Specification (TS). In case of any contradiction between the data given in the Technical Specification (TS) and this General Technical specification (GTS), data given in the Technical specification (TS) shall prevail.

1.02 Standards

The design, manufacture, assembly and testing as well as performance (including safety, earthing and other essential provisions) of equipment and accessories covered under this specification shall, in general, comply with the following:-

- Latest applicable Standards and Codes of Practices published by Bureau of Indian Standards (BIS).
- Latest IPSS (Interplant Standards for Steel Industry)
- Latest Indian Electricity Rules , DGMS & other statutory requirements of Central Govt. and State Govt.

In case, the tenderer is not in a position to comply fully with certain IS/IPSS specifications or in respect of certain items for which there are no IS/IPSS specifications, the tenderer shall bring out the same in his offer and the tenderer may base his proposals on latest issue of IEC recommendations or other reputed national or international standards subject to the approval of the Purchaser. However, wherever specified in this specification, IEC or other standards shall be followed.

The components and materials used and the equipment supplied shall conform to high standards of design, engineering and workmanship and shall be suitable for efficient operation and reliable service in steel plant conditions.
All equipment supplied and all work done including system design and detailed engineering shall also comply with the statutory requirements of Govt. of India and the respective governments of state in which the plant is situated. The installation shall also conform to Indian Electricity Act and Indian Electricity Rules.

© 2022 MECON Limited All rights reserved

1.03 Environmental Conditions, Design Ambient & De-rating considerations

1. For system design, following environmental conditions are to be considered.

S.N.	Environmental condition	Data
1.	Maximum ambient temp.	50 deg. C
2.	Humidity	95 % not occurring simultaneously with maximum temperature.
3.	Design Altitude	Less than 1000 M from MSL
4.	Environment	Dusty &Corrosive

2. The design ambient temperature for all equipment shall be considered as the maximum ambient temperature specified above, unless specified otherwise.

3. For Field & various technological areas, ambient temperatures in different units of a shop shall be considered, asmentioned in TS.

4. For Electrical rooms, control rooms following ambient temperatures shall be maintained, unless specified otherwise.

S.N.	Electrical premises type	Max Temp.
1.	HT/LT substations& rooms for Conventional MCC	+ 45 Deg. C (force ventilated)
2.	Cable basements/ Cable Cellars/tunnels	+ 45 Deg. C (force ventilated)
3.	Rooms for Intelligent MCCs, VFD rooms, Weighing controllers room, RI/O panelsetc	+ 35 Deg. C (Air conditioned)
4.	Control rooms, PLC, HMI, Servers, Tel exchange, Offices	+ 24 Deg. C (Air conditioned)

However,equipment selection and de-rating shall be based on maximumambient temperature specified above including the equipment in Electrical/ Control rooms so that failure of Air-conditioning shall not effect the performance of equipment.
Derating of PCs, Printers,Monitorsformaximum ambient temperature is not required.

© 2022 MECON Limited All rights reserved

In case of specific areas and shops, where the higher ambient temperature conditions are indicated in CTS, same shall be taken into consideration and equipment shall suitably be selected/ de-rated.

The equipment offered should be suitable for smooth, efficient and trouble free service in the tropical humid & corrosive climate prevailing at plant site and under the ambient temperature conditions indicated above for the different shops and areas. In hot areas of higher temperature conditions, the equipment shall be adequately protected against damage from radiant heat and hot air.

The equipment shall be designed to give efficient and reliable performance under heavy steel plant conditions and shall be such that the risks of accidental short-circuits due to animals, birds or vermins are obviated.

1.04 Standard Voltage levels:

Standard voltage levels to be adopted in the plant are specified as follows& same shall be followed unless mentioned otherwise in the Technical specification (TS).

S.N.	Description	Data
1.	HT AC	33 kV, 3 phase, 50 Hz, effectively earthed. 11 kV, 3 phase, 50 Hz, Non- effectively earthed. 6.6 kV, 3 phase, 50 Hz, Non- effectively earthed.
2.	LT AC	415V, 3 Phase, 50 Hz, 4 wire, solidly earthed. 690V, 3 Phase, 50 Hz, 4 wire.
3.	AC control and signaling voltage.	240V, AC obtained using suitable control transformers with manual/auto changeover facility as specified in TS.
4.	Control voltage for HT switchgear equipment, HT MCC	220 V DC
5.	Special socket outlets for portable lamps	24V, single phase, 50 Hz, AC obtained through suitable transformers
6.	DC Electro-	220V, DC, obtained through individual rectifiers

© 2022 MECON Limited All rights reserved

S.N.	Description	Data
	magnetic brakes	
7.	Solenoid valves	24V,DC, unearthed
8.	Machine tools lighting	240V, single phase, 50 Hz, AC lighting obtained through suitable transformers.
9.	Sockets for Welding purposes	415V, 100A, 3 pin plus earth with plug interlocked switch
10.	Sockets for hand tools*	240V AC,15A, 2pin plus earth with plug interlocked switch, power obtained through suitable transformers.
11.	Illumination system*	240V AC, 50Hz obtained through suitable transformers.
12.	L1 & L2 automation system equipment like PLC, RIO, PC, Servers etc, Weighting system & other electronic panels	240V AC, 50 Hz, obtained through UPS
13.	Special Electronic equipment/Package type control & monitoring system	24/12V, DC through SMPS & UPS
14.	PLC DI interrogation voltage	24 V DC through UPS.
15.	PLC DO	Potential free Relay Contact, 5A rating suitable for 240V AC, 220 V DC,24V DC
16.	Cranes & Hoist	As per equipment specification. ***Refer Section – B***

**** In cases of mines & associated areas voltage levels & source shall be according to DGMS guidelines.***

© 2022 MECON Limited All rights reserved

1.05 Symmetrical short circuit ratings:

The three phase symmetrical short-circuit ratings of the switchgear at the different voltage levels shall be as follows unless specifically indicated otherwise in the Technical specification:

S.N.	Description	Data
1.	33 kV switchgear	31.5 kA for 3 sec
2.	11 kV switchgear	40 kA for 3 sec .
3.	6.6 kV switchgear	40 kA for 3 sec .
4.	690 V switchgear	50 kA for 1 sec
5.	415 V switchgear	50 kA for 1 sec

1.06 Permissible variations in Power supply:

The system/unit/plant/equipment shall be designed so as to be suitable for the following variations in incoming voltage and frequency unless specifically indicated in the Technical specification:

S.N.	Description	Voltage	Frequency
1.	For HT system :-	+/-10%	+/- 3%
2.	For LT system	+/-10%	+/-3%
3.	For Control voltage AC	+/-10%	+/-3%
4.	For Control voltage DC	+/-10%	NA

In case of sensitive equipment which require more stringent quality of power supply with lesser variations to achieve the desired performance, the supplier shall provide the necessary regulator/stabilizer required for before such equipment.

© 2022 MECON Limited All rights reserved

1.07 Criteria for selection of voltage levels for motors & Power devices:

a) For fixed speed Process applications

1. AC squirrel cage induction motors (SCIM) of ratings **up to** 200 kW and slip ring motors up to 250 kW shall be fed at LT, 415V, 3 phase 4 wire 50 Hz, with DOL. However, soft starter with DOL bypass shall be provided for drives rating in range of 90 kW to200 kW where full torque load starting is not required (like for fans, pumps).

2. AC motors (SQIM) of ratings **more** than 200KW & upto 2000 kW shall be connected to the 6.6 kV HT power supply system and shall be DOL start.

3. AC motors (SQIM) of ratings **more** than 2000KW & upto 3000 kW shall be connected to the 6.6 kV HT power supply system and shall be provided with reactor/FCMA based Soft starting system.

4. Motors of rating in excess of 3000 KW shall be fed from 33kV power supply through individual transformerof 33/11 kV of adequate rating or as specified in TS.

b) For variable speed Process applications

1. AC squirrel cage induction motors of ratings up to 300 kW shall be fed by 415V VFD.

2. VFD drive panel for Motors from 110 kW to 300 kW shall be fed from PCC. However drives for motor rating less than 110 kW may be fed from MCC.

3. For motors ranging from more than 300 kW to 1000 kW shall be fed by VFD through dedicated converter transformer with SQIM motor rated voltage of 690V / 3.3kV/6.6 kV.

4. For motors above 1000 kW, the Motors shall be fed from MV VFD of 3.3 kV/6.6 kV/11KV through dedicated converter transformer. However, any other voltage due to proven technology can be accepted subject to approval by purchaser/consultant.

5. AC Squirrel Cage Induction Motors shall be used for drives requiring speed control. **Use of DC motors, AC slip ring motors shall be avoided unless as specified in TS.**

6. For Crane applications refer equipment specification in Section –B.

© 2022 MECON Limited All rights reserved

1.08 Power Distribution system design

The power distribution system shall meet the following guide lines:

1. Suitable numbers of 415V Load Center Substation (LCSS) comprising PCC and other associated equipmentshall be provided for feeding Motor control centers, MCPs, PDBs, MLDBs, VFD drive panel for Motors from 110 kW to 300 kW and auxiliary power distribution boards as required for the plant. Each PCC in LCSS shall be fed from 2 X 100% rated transformers. The rating of the transformer shall be so sized that in case of outage of any one transformer, the other transformer shall be loaded upto 80% of the nameplate rating.

2. Suitable numbers of 415V Motor control centers shall be provided for feeding power supply to motors of rating less than or equal to 90kW, motorized valves/ dampers etc. All motors (upto 90kW) of one technological unit will be grouped area wise and fed from separate MCC for ease of maintenance and shut down. Motors of one technological unit will not be fed from MCC of other technological units. MCC for main process units will be Intelligent type (IMCC) or Conventional MCC as described in contract technical specification. MCC for AC, Ventilation and non-process areas will be conventional type (NIMCC).

3. Field located Power supply panels (MCB DB/ Local Starter Panels) shall be fed from PCC/MCC/PDB as per their load.

4. Fixed speed application LT Motors of rating **greater than 90 kW** shall be provided with independent Motor control Panel (MCP) which shall be fed directly from PCC. Power devices like MCCB, Contactor, Control transformers, shall be located in MCPs. In case of Process/Technological loads, intelligent motor controllers shall be provided. For non-process loads, Electronic type Over current relay (EOCR) with combined protection & display shall be provided. MCPs shall be located in MCC room.

5. For emergency loads as per process design/requirement, DG sets with AMF & emergency power distribution system shall be provided, unless otherwise specified in TS. For such emergency loads, emergency MCCs shall be provided with two incomers and one bus coupler. One incomer shall be fed from normal power and the other shall be fed from emergency power. Four pole MCCB/ACB shall be provided for incomers & bus-couplershaving interface with DG source.

6. MPCB/ Motor duty MCCB, contactor and overload relay rating for the low voltage general purpose induction motors shall be selected as per

© 2022 MECON Limited All rights reserved

type-2 coordination chart of selected manufacturer. However the minimum contactor rating shall be 25A. (AC-3 duty).

7. **LT Motor starting and permissible voltage dips are to be considered as below:**

   a) Voltage dip on starting of the largest L.T. motor shall be limited to 15% of the nominal voltage at the motor terminals.

   b) Total voltage drop during running of a motor from LCSS to motor during steady state shall be limited to 6%.

   c) Voltage drop at the terminal of other equipment shall be as per the minimum voltage required for proper functioning of the equipment recommended by their manufacturers.

8. Inside Electrical panel, wires wherever laid in groups shall be neatly installed in FRLS material rack.

9. All electrical panels like HT panels, Drive panels, MCC panels etc shall have provision of heaters in panels to avoid condensation of moisture.

1.09 HT VCB for Local Isolation & control of Distribution Transformer

HT VCB as Isolator without metering &protectionshallbe provided before each distribution transformer. This shall be utilized for isolation of transformer during maintenance.

The VCB as Isolator shall be located near the transformer either in LT switchgear room or in the respective transformer room confirming to IE rule requirement.

In cases of Converter transformer with primary supply of HT voltage, the HT VCB panel with protection, metering and control shall be provided. This shall be utilized for VFD transformer protection and start/stop control of HT motor through HT VFD. The configuration of the panel shall be Cable In Cable Out (CICO) having two verticals. DC control supply shall be backed by Station battery banks, if available in the same building. Otherwise DC control supply shall be derived using suitable rated capacity DC Power pack. Aux AC power for the DC power pack shall be fed from plant main UPS.

However, HT VCB for Local Isolation and control need not be provided for transformers fed from HT switchboard/ HT MCC located in same building.

© 2022 MECON Limited All rights reserved

1.10 Distribution Transformer & its sizing

To reduce inventory, the capacities of the distribution transformers shall be selected from standard rating of 1000kVA or1600kVA or 2000 kVA(unless specified in TS) for power supply and as per the following guidelines.(Excluding yard machines, for which refer Equipment specification in Section –B)

1. MD of MCCs, PDBs shall be calculated as per the guidelines given in the GTS clause 1.13.
2. Load factor of 0.9 shall be considered for motors being fed from PCC.The load factor shall be applied on the name plate kW rating of motors. Only working motors shall be considered.
3. Load of lighting transformer shall be considered as per the name plate kVA rating of transformer.
4. Diversity factor of 1.1 shall be used on the summation of MDs of various MCCs, MCPS, PDBs/ACDBs, LightingTransformers.
5. The voltage drop at the motor terminals during start of largest motor shall be limited to15% with all other load in running condition.
6. For crane power supply PCC, in case capacities of transformer is required to exceed 2000kVA, same can be selected as next standard rating of 2500kVA.

1.11 LT Bus-duct & its ratings

Distribution transformer shall connect to 415 V Power Control Centre through LT Bus-duct. Current rating of LT Bus duct shall be 2000A, 3000A, 4000A & 5000A respectively, for 1MVA, 1.6MVA, 2MVA & 2.5MVA transformers

1.12 415 V Power Control Centres (PCC)& ratings of its feeders

Incomer breaker ratings of PCC shall be 2000 A, 3200A & 4000 A respectively for substation with rating of transformers as 1000 kVA, 1600 kVA & 2000 kVA respectively.

Unless otherwise specified in TS, Air Circuit Breakers (ACB) shall be considered for all outgoing feeders of PCC. The rating of outgoing feeders of PCCs shall be selected from standard Air circuit breakers ratings of 800A, 1000A, 1250A& 1600A. All breakers shall be suitable for operation at specified design ambient temperature. Metering CTs shall be selected considering the breaker rating. However, outgoing feeders of crane PCC may be provided with up to 2000A, 2500A ACBs, if required as per load.

© 2022 MECON Limited All rights reserved

If specified in TS, outgoing feeders of PCCs may be provided with MCCBs for feeder ratings upto 630A and shall be selected from standard rating of 250A, 400A & 630A.

Rating of outgoing ACBs/MCCBs shall be decided considering Maximum demand current with minimum of 125% safety margin and shall be selected from above defined standard ratings.

ACBs/MCCBs shall be provided with micro processor based direct acting, self-powered releases with LSIG protection.

1.13 Maximum Demand of MCC, PDB, ACDB

Maximum demand (MD) of the MCC shall be calculated considering the following:

1. Working load of the MCC/PDB/ACDB shall be calculated based on the motor kW rating.
2. The load factor shall be considered as follows:
   - For continuous drives – 0.9
   - For intermittent drives like sump pumps etc. – 0.2
   - For electrically actuated valves / dampers – 0.2
   - For maintenance loads like hoists, cranes, welding sockets etc. - 0.4
   - For ESP load – as per cyclic duty specified by ESP supplier
   - For all the other intermittent duty drives - as per cyclic duty specified by technological supplier as per process requirement
3. Welding and utility socket loads shall not be considered for calculation of maximum demand of transformer. However, Maximum demand on PDB shall be calculated considering welding sockets loads as maintenance loads with load factor as 0.4, same as for hoists, cranes, while calculating the rating of incomers.
4. Load factor shall be applied on the name plate kW rating of motor.
5. Diversity factor shall be considered as one.
6. Load on account of spare feeder is not applicable for MD of MCC/MLDB/PDB while doing Transformer sizing.
7. However Load on account of spare feeders shall also be considered for calculation of maximum demand as per guidelines indicated in Sl. No.2. for MCC/MLDB/PDB.
8. Load of power supply feeders shall be corresponding to the load being fed with 0.9 load factor.

© 2022 MECON Limited All rights reserved

9. Cyclic load shall be converted to continuous load and shall be used for MD without load factor. (e.g. 22kW motor at 40% duty factor shall have continuous load as 22xsquare root of 0.4)

1.14 Selection & Configuration of incomers for MCC/PDB/MLDB

1. All LT panels like MCC, PDB, MLDB etcshall have 2 incomers & one bus-coupler, unless specified otherwise & with following exceptions:

   a) PDB feeding to non operational loads can have only one incomer.

   b) MCC &MLDB requiring to feed normal as well as emergency loads or lighting loads respectively shall have 2nd bus-coupler & third incomer (3rd incomer fed from emergency source). In case of emergency the third incomer should be ON & 2nd bus-coupler to trip automatically.

2. Incomer& Bus coupler of the MCC shall be ACB / MCCB having fault level as per the design short circuit level specified. MCCB (Non-Draw out/Draw out as per MCC design) with microprocessor based protectionshall be provided for ratings 630A and below and ACB (draw out type) shall be used for rating above 630A with microprocessor based protection*. Maximum rating of ACB for incomer & bus coupler shall be 1600A with microprocessor based LSIG protection.

   *Microprocessor based protection shall include Overcurrent, Instantaneous & Earth fault protection. Protections shall also include Short circuit protection with time delay in case of incomers.

3. Continuous current rating of the incomer shall be corresponding to MD of the MCC/PDB including spare feeders with safety margin of 25%. For MLDB, minimum continuous rating of incomer shall be same as current rating of isolation transformer provided with incomer. Minimum rating of incomer of PDB shall be 400A incase welding socket is fed from PDB.

4. Continuous de-rated current of ACB/MCCB due to enclosure and for ambient temperature shall be more than MD / transformer current rating.

5. Continous current rating of main bus bar of MCC/PDB/MLDB shall be equal to incomer MCCB/ACB rating

6. All incomers & Bus-coupler ACB/MCCBs shall be of same rating and with identical features and can be interchangeable.

7. Incomer and bus coupler shall be mechanically interlockedin such a way that at any given time only two breakers can be closed. Electrical interlocks shall be provided as follows:

   - When incomer ACBs / MCCBs are ON then bus coupler ACB/ MCCB can not be switched ON.

© 2022 MECON Limited All rights reserved

- When incoming power to one of the incomer is not available then bus coupler can be switched ON manually.
- When incoming power to the incomer breaker is restored then incomer can be switched on manually, only after switching OFF the bus coupler.
- In case of Emergency MCC, it shall be provided with third incomer and second bus coupleralso.Auto changeover arrangement shall be provided to switchover to DG souce. Four pole MCCB/ACB shall be provided for incomers & bus-couplers having interface with DG source.
- In case if the MCC is having one incomer as Emergency,then the emergency incomer may or may not be of same rating as the Normal Incomer. However the buscoupler shall be of the same rating as the Normal Incomer.

1.15 Outgoing Feeder Selection for MCC, Local Starter Panels, Local standalone Control Panels

1. **Power supply feeders** shall be provided with MCCB (microprocessor based with over current, short circuit & earth fault release).
2. **Motor feeders** shall be provided with Motor protection MCCB, contactor, overload protection device (Intelligent Motor Controller/EOCR/Thermal overload relay), and other auxiliary equipment like selector switch, indicating lamps, auxiliary contactors etc. as per requirement.

S.N.	Motor Feeder Panel type	Overload/Overcurrent Protection device
1.	Intelligent MCC	Intelligent motor controller relay
2.	Conventional MCCs	EOCR relaywith combined protection and display
3.	Utility Panels& Local Starter panels	Thermal overload relay or above

MPCB/MCCB shall not be used for Motor overload protection.

1.16 Rating Selection of Variable Speed AC Drives.

Continuous current of AC drives shall be decided as indicated below:

1. For continuous duty drives like pumps, fans etc. – 115% of motor full load rated current (as indicated in motor data sheet/name plate).

© 2022 MECON Limited All rights reserved

2. For motion control drives, Belt weigh feeders, Vibrating feeders and intermittent duty drives – 125% of motor full load current (as indicated in motor data sheet/name plate).
3. For all constant torque loads e.g Crane, hoists, Moving machines/drums, &multi motor drives like moving machines, roller table motors etc. - 150% of motor full load rated current (as indicated in motor data sheet/name plate) & 150% of the summation of each motor rated full load rated current (as indicated in motor data sheet/name plate) for multi motor drives like roller table group drives or any other group drives .
4. Apart from above factors, Current rating calculation of AC drive shall also include applicable de-rating due to specified ambient temperature.

Line reactor shall be provided for drives =<400KW in incoming side. Separate isolation transformer need not be provided, in case drives are fed from transformer stations/transformers dedicated only for VFDs. Suitable output chokes/ terminator shall be provided in output side of the VFD considering limitations of cable distance as per manufacturer's recommendation.

1.17 Mitigation of Harmonics in system design

1. The Power distribution system shall be designed such that the system complies with harmonic values as stipulated under IEEE -519:2014. Accordingly the value of Total Harmonic Distortion(THD) and Total Demand Distortion (TDD) for voltage and current harmonics shall comply with the standard Table-1 & Table-2 as mentioned in IEEE – 519 respectively.
2. The term "Point of common coupling (*pcc*)" mentioned in IEEE – 519 shall be considered as the 415 V Busbars of each Power Control Center of all LT substations. Hence the use of passive components should be selected in order to control the supply impedances and accordingly control the current distortion and voltage distortion respectively.
3. Calculation for THD & TDD shall be submitted along with Basic engineering documents while submitting Overall SLD. This Calculation may not be applicable for those LT substations which does not feed to VFD drives or any other non linear load in steady state conditioncausing generation of harmonics.

© 2022 MECON Limited All rights reserved

1.18 Relay Co-ordination and relay Setting Calculation

The relay setting calculation shall be carried out considering the following aspects

1. Fault level for upstream feeding end equipment shall be considered for relay setting calculation. This fault level value for the upstream feeding end system shall be obtained from purchaser/ consultant during detailed engineering.
2. Relay co-ordination for all the breakers in the scope of the bidder shall be achieved. However, relay setting chart with recommended settings, design calculation & graphs shall be submitted from the feeding end breakers of purchaser up to the incomer of the LT PCC/HTMCC.
3. Beyond incomer of LT PCC/HTMCC up to the load, co-ordination shall be achieved by total discrimination between successive breakers through relasesorRelay&fuses as applicable as per the TS of the respective equipment.
4. While selecting the release ranges and the tripping curves for the LT equipment, bidder shall ensure total discrimination between the successive breakers during overload, short circuit and earth fault.

1.19 Uninterrupted Power Supply (UPS)

UPS shall meet the following requirements:

1. Parallel redundant UPS system shall be provided. Each UPS shall be rated for full capacity and under normal condition both shall be sharing the load. In case of failure of any UPS, the remaining UPS shall take the full load.
2. Rating of each UPS shall be selected consideringspare capacity for future expansion.Accordingly UPS rating shall be min 150% of calculated load.
3. Load factor or diversity factor shall not be considered while calculating the load on UPS.
4. Three separate power supply from different sources shall be provided to UPS – one for UPS, second for redundant UPS & third for Bypass.
5. Bypass supply to equipment shall be through constant voltage transformer. UPS system shall have bump less transfer from UPS to by pass and vice versa.
6. Battery shall be Ni-Cd. Separate Battery shall be provided for each UPS. Rating of each battery bank shall be 100% of rated capacity of UPS.. While calculating the battery bank AH capacity, aging factor of 1.25 & design margin of 10% shall be considered.

© 2022 MECON Limited All rights reserved

7. UPS and batteries shall be located in air conditioned rooms.

   Backup time should be 30 mins unless specified otherwise

1.20 Selection of Cables

1.20.01 General

1. All LT power cables shall be 3.5 / 4 coresXLPE.All HT Power cables shall be 3 core XLPE cables.
2. Lighting cable from SLDB to light fitting JB shall be XLPE/PVC insulated. From JB to fitting the cable shall be PVC insulated.
3. Minimum size of the cables used in LT power feeders shall be 6sq.mm foraluminiumconductorand 4sq.mm for copper conductor.
4. Maximum cable size shall be 240sq.mm for LT Application.
5. The minimum cable size selected for applications in the power circuits of cranes and other moving mechanisms shall be 4sq.mm with copper conductor. For brake power supply, minimum size shall be 2.5sq.mm copper.
6. Flexible copper cables shall be used for power supply to vibrating mechanisms&PowerJunction Boxes shall be provided to terminate the flexible cable.
7. For hoists, shuttle conveyors, plough feeders etcshall be provided with flexible / festoon cable system, through EPR insulated, PCP/CSP sheathed flexible cables.
8. Cables used for circuits of brakes, solenoids, field windings and secondary windings of measuring transformers shall be copper conductor with cross-sectional area not less than 2.5sq.mm. For Tacho generators, screened cables of minimum 1.5 sq.mm copper shall be used.
9. Cables used for control circuits of Local control stations, limit switches, belt protection switches, proximity switches, PLC DI/DO, PVC insulated and PVC sheathed multicore cables with stranded copper conductors having a minimum cross-sectional area of 1.5sq.mm shall be used. The number of cores may be standardized as 3, 5, 7, 10, **12**, 14, 19, and 24.
10. Recommendation of OEM of Variable Frequency Drives shall also be considered while selecting Cables and shall be provded as per IEC TS 60034-25:2014
11. Special screened/shielded cables with minimum 1.5 sq.mm copper shall be used for mA and mV signals. For Load cells, Junction box to Control panel, minimum 1.0sq.mm un-armoured, special/screened cable in GI conduits shall be used.

© 2022 MECON Limited All rights reserved

12. Minimum 20% spare cores shall be provided in multi-core control and signal cables
13. For calculating the current rating of LT power cables de-rating factor of 0.65 shall be considered.

1.20.02 HT Cable sizes for LT sub-station transformers/Power supply Feeders

The cable size shall be calculated based on the withstand capacity of cable at design short circuit rating considering breaker opening time of 0.25 seconds.However, standard size of cable shall be 240sq.mm aluminium unless specified otherwise in TS.

1.20.03 Cablefor Incomer of MCC / PDB / MLDB/MCP

1. Cable size for incomer of MCC & PDB shall be selected on the basis of current rating corresponding to MD including spare and voltage drop.
2. Cable size for incomer of MLDB shall be selected on the basis of current rating corresponding to lighting transformer and voltage drop.
3. Minimum size of cable shall be 185sq.mm aluminium& maximum size shall be 240sq.mm aluminium.

1.20.04 Cables for LT & HT Motors

1. Cable size for HT motors shall be selected on the basis of rated nameplate current, starting & running voltage drop as specified below and withstand capacity at design short circuit rating of the system considering breaker opening time of 0.25 seconds.
2. However, standard size of cable shall be 240 sq.mm aluminium.
3. Cable size for LT motors shall be selected on the basis of rated nameplate current and starting & running voltage drop. For limitation on account of voltage drop refer clause 1.08 above.
4. However, minimum size of Cables for LT motors shall be as indicated in Table-1A.
5. For LT motors of rating 110 kW & above, Power JB shall be provided near the motor. From power JB, flexible copper cable with one lower size as indicated in Table-1A shall be used.

1.20.05 Cables for Illumination System

© 2022 MECON Limited All rights reserved

1. The minimum size of the cable for feeding incoming power to SLDB or MCBDB having 32A / 63A incomer shall be 4Cx25sq.mm / 4cx50 sq mm, aluminium.
2. Cable size for SLDB (or MCBDB) to light fittings shall be 3x2.5sq.mm. 3rd core shall be used for earthing.
3. In case of concealed wiring for light fittings & sockets 5A rating, single core, FRLS, PVC insulated, stranded copper conductor wire of size 2.5 sqmminGI conduit shall be used. For utility sockets of rating 15A, AC point wiring, light point Switch boards, minimum cable size shall be 4sq.mm copper in MS conduit shall be used for concealed wiring.

1.20.06 Cables for Automation System

1. All Cables connecting I/Os from field to PLC or remote I/O panel shall be of stranded copper conductor of type YRY as per IS: 1554 and of size minimum 1.5 sq.mm.
2. Communication bus/cables, FO communication cables shall be laid in GI pipe. Separate GI pipe shall be used for each communication bus/cable & FO cable. The route for redundant communication bus/cables, FO communication cable shall be different.

1.21 Cable Laying, Cable floors & Routes

S. N.	Requirement	Remarks
1.	Inter shop cable routing	Through independent overhead walk able cable bridgeorCable Trench (or as specified in TS).
2.	HT Switchgear/HT MCC room	Cable Cellar (above ground level in case OH cable bridge &Cable basementbelow ground in case of cable tunnel) with minimum 4.0mtr clear height (4.0mtr clear height from bottom of any beams).
3.	LT sub-station/ LT Panel Rooms/ MCC/PDB/MLDB rooms/Electrical/Electronic Panel rooms	Cable Cellar (above ground level in case OH cable bridge &Cable basementbelow ground in case of cable tunnel) with minimum 3.5 mtr clear height (3.5 mtr clear height from bottom of any beams).
4.	Small Electrical Panel rooms	Cable trench above ground level in case of room at ground floor / Cable floor in case of MCC room at above

© 2022 MECON Limited All rights reserved

S. N.	Requirement	Remarks
	(Housing panels less than 10 verticals)	ground floor level.
5.	Central Control rooms/PLC rooms/RIO Rooms/VFD Rooms	Cable Cellar (above ground level) with minimum 3.5 mtr clear height (3.5 mtr clear height from bottom of any beams).
6.	Small Control room/Pulpits (housing only Operator stations)	False floor with 750mm height
7.	Illumination system	1. Unarmoured cables through /GI conduits (painted at site with wall colour) In Electrical premises/MCC rooms/Sub-station buildings/Cable cellars. 2. 3 Wires (Ph, N,G) with class "C" insulation (FRLS) through concealed GI conduits in buildings like Control rooms, Office buildings/Office rooms, Laboratory, Canteens, Welfare buildings, Training centers, Conference rooms, Library, premises having importance for aesthetic. 3. Armoured cables on trays for Conveyor galleries, Junction houses, Transfer stations, Screen/crusher buildings, Technological platforms/buildings, Pump houses, Main Shop floors, Cable tunnels/Cable bridges, Casting floors, Bay light fittings of main shop units

1.22 Ventilation and Air Conditioning of Electrical premises

a) The various parts & types of the **Electrical premises** in the plant shall be provided with ventilation and air conditioning facilities as indicated below:

© 2022 MECON Limited All rights reserved

S. N.	Description of Premises	Environment conditions to be maintained.	ACVS System type
1	Cable Tunnels Cable Basements	**Temp** - Upto 3 deg C above atmospheric dry bulb temperature. **Pressure** - 2 to 3 mm water column	Push pull type ventilation system with fresh filtered air.
2	ONAN/ONAF Transformer rooms, Capacitor rooms & other Transformer upto 630 kVA	**Temp** - Upto 3 deg C above atmospheric dry bulb temperature.	Exhaust Fan/Push pull type
3	Battery Room, Toilet, Pantry	**Temp** - Upto 3 deg C above atmospheric dry bulb temperature.	Exhaust Fan
4	Electrical building with Conventional MCC,MLDB,PDB limited to size less then 75 sq M	**Temp** - Upto 3 deg C above atmospheric dry bulb temperature.	Exhaust Fan/Push pull type
5	AN/AF Transformer room, HT Switchgear room LT Switchgear (PCC, MLDB, PDB, Conventional MCC), Cable Cellars	**Temp** - Upto 40 deg C **Pressure** - 2 to 3 mm water column	Air washer /Push pull type
6	RI/O Panels room	**Temp** - Upto 35 deg C	CentralisedAirconditioning / Package AC/Split Air-conditioner
7	Intelligent MCC Room, VFDs, Soft starters, Weighing controllers, ESP Controllers & other electronic equipment	**Temp** - Upto**35**deg C **Pressure** – 2 to 3 mm water column	CentralisedAirconditioning / Package AC with false ceiling. *Split AC is acceptable for area smaller then 30 sq M
8	Control Rooms, Pulpits, rooms having PLC/DCS, SCADA, Telephone exchange, UPS, Level-1 & Level-2 Automation	**Temp** - 21 to 24 deg C **Pressure** - 2-3 mm water column Humidity – 50 to 55%	CentralisedAirconditioning / Package AC with false ceiling. * Split Air-

© 2022 MECON Limited All rights reserved

S. N.	Description of Premises	Environment conditions to be maintained.	ACVS System type
	system, Server rooms, Offices		conditioner to be provided if Centralised /Package AC not possible.

1. Ceiling fans shall be provided in conference rooms, office rooms.

2. All rooms provided with AC (24/35deg.C) shall be provided with false ceiling.

b) General Features of Air-conditioning & Ventilation System.

1. False ceiling shall be provided to cover AC ducting in case of Centralised or Package Air conditioning .

2. Office / Conference Rooms shall be provided with centralized Air-conditioning system/ package type AC units or split type in the given order of preference. If centralized AC or Package AC is not available in the building, then Split AC shall be provided.

3. Ventilation and air conditioning system shall be interlocked with fire detection system for safety.

4. Airtight double door arrangement shall be provided for each entry/exit of electrical rooms, control rooms and basement. Minimum two numbers of entry/exit shall be provided for each room.

5. All office rooms, conference rooms shall be provided with ceiling Fans with electronic regulator, switch boards even though these rooms are provided with Air Conditioning system. All Canteen places, In-charge rooms, Office buildings, Administrative buildings, Welfare buildings and any room with window/split AC system shall also be provided with ceiling Fans with electronic regulator & switch boards for ON/OFF.

6. The ventilation and air-conditioning system supplied shall be complete with all necessary central air-conditioning plants (modern microcomputer based), packaged air-conditioners (micro-computer based), fresh air filters, fan units, supply and return air ducts, monitoring and regulating equipment and electrical power supply equipment to complete the job complete in all respects.

7. Separate room, as part of control room shall be provided to house AC and ventilation units.

© 2022 MECON Limited All rights reserved

8. For detailed description of Airconditioning and Ventilation system please refer GS-08/ respective Tender specifications.

9. Necessary safety interlocks shall be provided to stop the fans/AC system in case of fire and to prevent spread of fire.

1.23 Control Philosophy

1.23.01 General

Adequate and appropriate automation systems shall be designed and engineered using state-of-art and field proven technology to facilitate monitoring, control and all other functions associated with operation of all the plant/shop units through user-friendly human-machine interfaces.

The Automation system shall be designed with geographical & functional distribution of hardware in a multi-level hierarchy, viz. Level-0, Level-1, level-2, level-3 etc, as applicable, to meet specific plant requirements for monitoring, control, process visualisation&optimisation of all the plants/ shop units.

The automation system shall be structured in general, considering the following hierarchical levels:

- **Level - 0**

This level, also called field level, is functionally responsible for generation, transmission & conversion of signals for the process parameters compatible to the higher level equipment as well as signal based activation for the final control elements.

This level is realized based on the primary sensing elements, proximity switches, converters, microprocessor based intelligent systems and final control elements. The components of this level shall be grouped and distributed geographically around the plant as per main process equipment location.

- **Level-1**

This level, also called supervisory level, is functionally responsible for supervision of the individual process equipment & functions, monitoring, control, visualisation and regulation of process parameters to the desired level based on the signals generated from the field level. This level is also responsible for processing of signals for generating compatible control commands to control the process parameters by activation of the final control elements.

© 2022 MECON Limited All rights reserved

This level is realized based on the controllers & systems, input & output systems, data base units, data communication, visualization system (HMI stations) and interface units for connectivity to the other levels of the automation system. In addition to routine PID functions, advanced process optimization functions comprising special control algorithms, mathematical computations etc. shall be able to permit distribution of control and data acquisition functions throughout the entire plant.

- **Level-2**

This level (if specified in TS) is functionally responsible for the process control functions through the Level-1 automation system by process guidance & optimization and control of process parameters to the desired level of perfection based on the available signals from the supervisory level. This level is also called process control level and is responsible for generating set points / control commands to the Level-1 equipment based on the pre-loaded process specific mathematical models. This level is realized based on the process computers& its own data base units, input & output systems, data communication systems, visualization system (HMI stations) and interface units for connectivity to the other levels of the automation system. Level-2 automation system has been covered under a separate General Specification.

The Level-1 automation shall basically comprise:

- Either a Distributed Control System (DCS) based automation system Or
- A Programmable Logic Controller (PLC) based automation system Or
- A combination of both, depending on project / application specific demands & requirements.

1.23.02 Modes of operation

The following modes of operation shall be provided:

A. Local

Local Control Station (LCS) shall be provided for all motor and actuator drives. LCS shall have required numbers of push buttons & indication lamps for operation of drive and one no. “Local – Remote” selector switch. One number Emergency Stop PB (Pressed to lock turn to release) shall be provided with LCS.

In case of group drives, apart from one LCS as described above near one motor, other group motor shall also be provided with one Local control box housing Emergency Stop Push button and other components as per requirement.

© 2022 MECON Limited All rights reserved

In Local Mode,operation of single drive / equipment from LCS shall be provided. This mode of operation shall generally be **for test and repair purposes**. Permission for Local Operation (PLO)shall be obtained from HMI/PLC from Control room after which it shall be possible to start the drive from LCS. The PLO from HMI shall be in the form of a PLC-DO which shall be wired to MCC control circuit of each motor. The PLC DO shall be normally closed contact in case of PLC/communication failure for fail safe operation.

To enable the testing of individual equipment all the process interlocks (except safety interlocks) shall be bypassed in this mode. However,all safety interlocks (like Low-Low level switches, Pull Cord switch, Suction side valve limit switches, Em. Stop Push buttons etc.)shall also be hardwired in the MCC power contactor coil circuit.

Local enabled indication lamp shall also be provided in LCS, if the operation from local, essentially requires permission from control room operator/DCS/PLC.

Drive cannot be started from any place if the Em. Stop Push button is operated. However, alarm shall be generated in the control room Operator station, in case of operation of Em. Stop PB.

B. Remote

In Remote mode, the equipment can be started from control room only. This remote mode is further divided into following three modes:

- Remote Manual mode
- Auto mode
- Computer mode (Level-2 system)

Once the remote mode of operation is selected, then from HMI with help of key board / mouse / soft keys above three modes of operation can be selected.

- **Remote Manual Mode**

Under this mode, it shall be possible to start/stop individual equipment with the help of separate commands given by Operator through Operator stations/keyboards and the control, sequential operation of various equipment/mechanisms in the required sequence shall be executed by controller with all interlocks. In this case, all the changes / operations, set points etc. are operator initiated.

© 2022 MECON Limited All rights reserved

- **Auto Mode**

  This is the normal mode of operation of the plant. Operator from Control room shall control, monitor the plant & equipment with the help of Operator stations. In this mode, the desired values (set point) of the parameters of process control loop shall be set via keyboard of the HMI and sequencing and logic functions shall remain operative through the controller as per application software.

  There shall be a provision for group start/stop of drives in individual section with the required interlocks, logic and sequencing between the individual drives.

- **Computer Mode**
  In this mode, the entire plant shall be controlled through level-2 system (if level-2 is specified in TS). All the required set points shall be generated by level-2 computer as per the mathematical model calculations based on the inputs received from the field.

1.24 Spares Philosophy

1.24.01 The spare philosophy for various equipment shall be as follows:

1. PCC shall be provided with **minimum four (two in each section covering minimum & maximum rating) or 20%** spare feeders whichever is higher.

2. MCC, PDB, ACDB and MLDB shall be provided with **20%** spare feeders or one of each type/ratingwhichever is higher with minimum of two numbers in each bus section.

3. LDB, SLDB (or MCBDB) for lighting and utility sockets shall be provided with minimum 30% of spare feeders or nine numbers, whichever is higher.

4. ACDB of UPS shall be provided with 40% spare feeders.

5. 20% spare terminals shall be provided in each module of MCC, MCP and each ACB panel.

6. 20% spare terminals shall be provided in all junction boxes, LCS and local control panels / local starters.

7. Control desk and control cabinet shall be provided with 30% spare terminals.

© 2022 MECON Limited All rights reserved

8. Marshalling panel of MCC and PLC shall be provided with 20% spare terminals.

9. Relay panels / relay modules shall have 20% spare relays of each type fully wired up to the terminal blocks.

10. 20% spare interposing relays fully wired up to the terminal blocks shall be provided in PLC panels.

11. 10% spare components of each type shall be provided in each control desk/control cabinet / signaling panel.

12. Spare I/O philosophy for PLC shall be as follows:

- Min. of 20 % of I/O modules used (with at least one module of each type) for input and output shall be offered as spare for each IO Panel of programmable controller and the same shall be mounted and wired to the terminal block in the cubicle suitably.
- No. of spare Channel per card shall be 20 %.
- Provision shall be provided with empty slots for future expansion for 20% I/O modules.
- Minimum 50 % spare memory capacity shall be available in the system for Purchaser's use after loading of application and system software.

13. The over head cable bridge/tunnel/trenches shall be designed considering future cable laying and shall have 20% spare space for installation of future cable trays.

1.24.02 Availability of Spareequipment& components for procurement by Purchaser

It has to be ensured by the supplier ofall electrical/ electronic/instrumentation items including HT & LT Switchgear panels ,VFD drives, Automation system, Telecommunication and all other that spares shall be available for procurement fornext10 years.

1.25 Guidelines for design and engineering the layout of electrical premises.

The tenderer shall prepare the layout drawings for civil assignment and civil drawings for construction of the substation buildings and other electrical premises taking into consideration the requirement listed below. In case of total turnkey contract, the civil aspects mentioned in following specification shall be adhered to while design, engineering & execution of civil work.

1.25.01 Electrical Substations/Electrical buildings/MCC rooms

© 2022 MECON Limited All rights reserved

Numbers, types& Locations

1. Electrical rooms, control rooms and cable galleries/basement shall be considered fire hazardous.

2. Separate Electrical buildings/MCC rooms shall be providedforvarious Technological areas considering Load centres, plant layout, convenience ofmaintenance,cableroute etc. All electrical building/MCC rooms shall have adequate space to accommodate the electrical equipment from the point of view of operation and maintenance, and conform to IE Rules, Regulations as well as indicated in this clause 1.26.01.

3. The Electrical buildings/MCC rooms shall be located close to the main Technological unit with suitable ro ad approach.AllElectricalbuildings/ MCC rooms shall be of Civil construction unless otherwise specified in TS, with suitable drainage for rainwater.

4. Use of multi-storied buildings (more than two floors i.e. cable floor & Panel floor) for Electrical buildings shall be avoided. However, in case of space constraints as per General layout & matching of control room floors with process floors, electrical/control room buildings with more than two floors may be provided.

5. All Electrical buildings including MCC rooms, Central control rooms, PLC/DCS Panel rooms, server and engg station rooms shall be provided with cable cellar with minimum 3.5Mtr clear height unless otherwise specified in TS.

6. The cable cellar shall be above ground in case of OH cable route and underground in case of Cable tunnel, unless otherwise specified in TS.

7. The Electrical buildings/MCC rooms shall be connected with overhead cable bridge/underground cable tunnels as specified in TS. Also, the Electrical buildings/MCC rooms shall be suitably connected to Technological units through suitable overhead cable bridges/cable tunnels as specified in TS (Use of underground buried cables shall be avoided).

   Apart from Cable bridge/Tunnel as mentioned above, cables in small quantity can also be routed through technological/building structures in case agreed by technological/process groups considering safety rules, availability of space/clearances, maintenance aspects etc.

Clearances, approaches, stairs& exits

8. **Clearances inside the electrical rooms shall be as below:**

© 2022 MECON Limited All rights reserved

S.N.	Description of Space / Clearance	Min. Space (in mm)
1.	Back clearance of a Single front panel	1250
2.	Front to front clearance between drawout/ semi- drawout panel boards	2500
3.	Between two panel boards installed in a row	1000 (For similar small panels it can be 200)
4.	Between front of the panel to the wall of the room	2000
5.	Between the wall and end of the switchgear/MCC	1000
6.	Back to back clearance	1500
7.	Back to front clearance	2000
8.	Between the bottom of the ventilation duct and top of the electrical equipment	1000

9. The height of rooms housing 415V LT Switchgear/PCC, HT MCC shall be decided considering sufficient clearance between panel top to Bus ducts, ventilation ducts etc. However, for such rooms minimum 5.0mtr clear height shall be provided. For IMCC rooms, VFD rooms, RIO rooms, Control rooms provided with air conditioning system, clear gap between tallest panel top to bottom of false ceiling shall be 1.0 mtr (minimum).

10. The clearance between the ceiling of the electrical room (room without false ceiling) and top of the tallest equipment shall not be less than 1.0mtr where the equipment are to be maintained from top and additional height of lifting tackle wherever required.

11. In all rooms, 20% spare space shall be provided for installation of future panels.

12. All the floors of electrical building/control rooms and cable cellar/basement shall have minimum two entries/exits. Each entry/exit shall have entry lobby (minimum 2500x2500) with two air tight doors. All doors shall open outside. Fire doors shall be provided with underground cable cellar/basement connecting cable tunnels. Cable tunnels shall be partitioned at suitable interval for safety reasons.

© 2022 MECON Limited All rights reserved

Accordingly, all cable tunnel partitions shall be provided with suitable Fire doors as under GS-10 (For Fire Fighting Chapter).

13. Each Electrical Buildings /LCSS buildings shall be provided with two covered stair cases(civildesign) from ground floor to roof top for entry/exit to different floors of multi-storied buildings.

    More numbers of stair cases shall be provided considering fire safety according to National Building Codes (NBC). The width of stair case shall be minimum 3500mm. The staircase connected to underground cable basement shall be different.

14. Air tight double door arrangement shall be provided for electrical rooms and basement. The stairs to the basement shall be from inside the electrical room.

15. Apart from normal door as main entrance, rolling shutters (3500x3500) shall be provided in ground floor for cable cellar.

16. Panel floor shall have door(s) for main entrance & emergency exit. equipment handling platform shall have double flap air tight door.

17. LCSS buildings shall house distribution transformers with covered roof. Roof height shall include the bus-duct portion of transformer, preferably matching with ceiling of PCC room.

Cable shaft & other utilities of building

18. Multistory buildings shall be provided with cable shafts. Shafts shall have maintenance /access plateform at each panel floor which can be accessed from panel room through a fireproof door.

19. Suitable ventilation room, preferably at ground floor, shall be provided with electrical building to house ventilation system equipment.

20. Suitable AC room (AHU room) shall be provided with electrical building, preferably at same level, to house AC system equipment.

21. All the electrical buildings which have either HT MCC/HT switchboard or the LT sub-station equipment, shall be provided with at least one number office room (minimum 6mtrx6mtr), gents & ladies wash room etc.

22. For multi-storied buildings of height 15mtr or more, additionally, suitable capacity Lift facility shall be provided considering NBC norms.

© 2022 MECON Limited All rights reserved

23. Equipment lifting platforms of minimum 3500mm wide shall also be provided for panel floors for ease of lifting the electrical panels. Lifting/handling facilities shall be provided.

Wiring, Lighting, aesthetics& other features

24. The wiring of light fittings in the control rooms shall be concealed type. Wiring of light fittings in the LCSS/HT MCC rooms, other electrical buildings, cable cellars shall be through (GI pipe)clamped on the walls/roofs (surface wiring). Modular switches shall be used in the control rooms, office rooms, conference rooms etc. (which are not required to glow continuously) for switching ON/OFF the lights/fans.

25. Disposition of control desk, mimic boards, instrumentation panels shall be properly located for visibility and operational convenience. Profile & dimension and painting of control desk/mimic panels shall be same as for control room for aesthetic design

26. Welding power socket outlets shall be provided within basement at intervals of 60m with minimum of one, where basement is less than 60m long.

27. 24V AC sockets fed from dry type L.V. transformers(240/24V) shall be provided for hand lamp connection throughout the premises including basement and cable tunnels.

28. Compressed air (oil and moisture free) points shall be provided for cleaning purposes at an interval of 30 M.

29. For lifting/lowering of equipment & erection material between floors, erection openings with removable cover plates shall be provided on the floor of the electrical rooms connecting the basement.

30. Electrical room located on the top floors shall have erection openings and landings.

31. Roofs of the electrical premises shall be fully watertight and moisture proof.

32. All electrical rooms shall be constructed with heat proof material at the roof if it is exposed to sunlight.

33. The wall of the basement shall have water proofing and draining facilities below ground level.

© 2022 MECON Limited All rights reserved

1.25.02 StandaloneControl Posts/pulpits (Within Shop Units)

- Location of control posts/pulpits shall be decided taking care of clear visibility and ease of operation.
- All control posts/pulpits shall be air-conditioned and temperature shall be 24deg. C.
- Air lock rooms shall be provided for all the control post/ pulpits.
- Inner walls shall be sound proof.
- False flooringcovered with insulating mat with min 600mm height shall be provided.
- Window glass shall be toughened, heat resistant and of greenish tint, hinged glass to be opened from inside.
- Hermetically Sealed Double glass panels, shall be provided to make the control post/pulpit heatproof.
- Glass panels of control post/pulpit shall have no horizontal joints as far as possible. Vertical joints shall also be minimized to the extent possible.
- Glass panel shall be mounted with kerb height from floor of 300 to 600 mm, however considering line of sight requirements also.
- Suitable wire mesh shall be provided for the glass windows for protection against mechanical damage wherever required.

1.25.03 Overhead Cable bridges (if applicable)

- In case of OH Cable bridge, minimum ground clearance of 6mtr shall be provided. However, OH cable bridge crossing roads, rail tracks, minimum 8 mtr clearance shall be provided. OH cable bridge crossing Hot metal tracks, heat shield shall also be provided.
- OH cable bridge/route shall have minimum of 3 mtr. clearance from Gas pipe lines.
- For Cable laying suitable walkways shall be provided of minimum 800 mm width.
- Suitable landing platform along with staircase shall be provided at an approx.. interval of 100Mtr.

1.25.04 Cable tunnels (if applicable)

Standard cable tunnel size (inside):

- Full tunnel : minimum clear width 2500 mm x 2500 mm (clear height*)
- Half tunnel : minimum clear width 1700 mm x 2500 mm (clear height*)

© 2022 MECON Limited All rights reserved

- Generally, clearance from the Top of cable tunnel to ground shall be 1500m which to be decided with GL&T/Civil.
- *****Minimum head clearance of 2500 mm shall be provided considering provision of space for light fittings &fire fighting equipment installations as applicable .
- Minimum clearance for walkable space in tunnels in any case shall not be less than 1000 mm.
- Partition door between basement and the cable tunnel shall be air tight and of fire retardant material. Cable tunnel shall be provided with fire / smoke detectors as per norms.
- Gradient of the floor at transition from one elevation to another shall not exceed 15 deg. Gradient shall be in the form of ramp.
- Floor gradient towards the water collecting pit shall not be less than 0.3%.
- Plate inserts (200 x 100 x 6 mm) at an interval of 1500 mm shall be provided on the wall along the length of the tunnel. Three rows of inserts shall be provided at suitable intervals along the height.
- Plate inserts shall be provided at an interval of 1.5 m under the ceiling for lighting fixture.
- Entries to the cable tunnel shall be provided generally at 70 m interval along the length of the tunnel inside the shop or at least 2 entries in case of small tunnels and considering Fire partitions.
- Tunnel walls shall be waterproof design.
- For interplant cable tunnels, long tunnel shall be split into compartment with fire proof partition doors as per Fire safety rules.
- All cable tunnels shall be properly ventilated.
- Atleast two evacuation exits should be provided in each of the cable gallery and cable tunnel. The distance between any point and exit should not be more than 35m. The distance from dead end of cable gallery/cable tunnel to the exit should not be more than 25m.
- All the cable tunnels and cable galleries shall be provided with sump pumps for pumping out seepage water. Sump pumps shall be provided with high level/low level switches for automatic operation.

1.25.05 Cable shafts

- Cable shafts shall be of either civil or structural design as per requirement.
- Landing platform shall be provided either at every 5 m of height or matching with the switchgear floors to be decided during engineering.

© 2022 MECON Limited All rights reserved

- There shall be provision to enter cable shaft from switchgear room and partition wall with airtight door shall be provided.
- Suitable cat laddersshall be provided in the cable shaft.
- Suitable ventilation/lighting facilities shall be provided for the cable shafts.

1.25.06 Transformer rooms

1. The minimum dimension of transformer room (for one transformer of 2000 kVA) shall be 6000 x 6000 x 6000 mm.

2. There shall be minimum 1000 mm clearance all around the transformer for both oil & dry type transformers.

3. The finished floor level of transformer rooms shall be same as FFL of the building.

4. Platform of minimum 1000mtr wide (with rail/channel) shall be provided in front of transformer room for handling/erection of transformers. Ramp shall be provided after the plateform to match with ground level.

5. Transformer room including the plateform shall have slope towards road to avoid any water deposit. A 1000 mm chajja(overhang) shall be provided above the door of transformer room.

6. Cable Trench shall be provided in transformer room for Power & Control cable.

7. Transformer shall be located in such a way that marshaling box & conservator shall be in front of the door.

8. **Oil type transformer rooms** shall be provided with double flap **expanded metaljali doors** with wicket door entry.

9. **Dry type transformer rooms** shall be provided with double flap sheet metallic**fully covered doors** with wicket door entry.

10. Emergerncy trip push button shall be located outside the room near to the door in a canopy mounted structure.

11. For oil type transformers, **partition fire wall** shall be provided between transformer to transformer and also between transformer to switchgear.

© 2022 MECON Limited All rights reserved

However in case of dry type transformer, the partition wall between transformer and switchgear room shall be provided and between transformers it need not to be provided.

12. Below the Oil type transformer, oil catch pit shall also be provided filled with gravels and connected to external oil soak pitlocated out side the room. Oil catch pit below the transformer shall be divided in two parts by a horizontal grating to hold the gravels on upper level & space for free flow of oil at bottom level.
A common oil pit can be provided for two transformers. The capacity of soak pit shall be equal to the oil content of the bigger transformer.

13. In case oil filled transformers are located inside the shop, the catch pit shall be outside the shop connected to soak pits by pipes.

© 2022 MECON Limited All rights reserved

1.26 Colour coding of equipment

S N.	DESCRIPTION OF EQUIPMENT	COLOUR	PAINTSHADE (RAL CODE)
I.	**POWER DISTRIBUTION EQUIPMENT**		
1.	HT isolator	Traffic Grey A	7042
2.	Transformer	Squirrel grey	7000
3.	Bus-duct	Light grey	7035
4.	Power Control Centers (PCC)	Light grey	7035
II.	**MOTORS**		
1.	HT motors	Traffic Grey A	7042
2.	415V LT AC motors	Silver Grey	7001
3.	Inverter duty Motors	Dark Grey	7030
III.	**MOUNTED ELECTRICS**		
1.	Equipment installed on or along with motors viz. Tacho generators, brake etc.	Same as that of motor	
2.	Equipment installed on mechanism but separate from motor viz. Limit switches, pull chord switches, belt sway switches, speed switches, load cells, photo electric relays etc.	Traffic Grey A	7042
IV.	**CONTROL GEAR**		
1.	VFD panels, UPS panels, Automation system panels, Relay panels, Weighing controller panel, TR controller panel, HT MCC, HT VCB, MCC, PDB, MLDB, MCP, Soft starter, LDB etc. including crane control panels	Light grey	7035
2	Lighting distribution and power distribution board	Light grey	7035

© 2022 MECON Limited All rights reserved

S N.	DESCRIPTION OF EQUIPMENT	COLOUR	PAINTSHADE (RAL CODE)
3.	Fire fighting panel	Carmine Red	3002
4.	Local control box, Junction box	Traffic Grey A	7042
5.	Control desk	Light grey	7035
6.	Pulpit equipment	Light grey	7035
7.	Telecommunication panel	Blue grey	7031
V.	**MISCELLANEOUS EQUIPMENT**		
1.	Junction boxes	Traffic Grey A	7042
2.	Conduit/pipe pull boxes	Traffic Grey A	7042
3.	Light fittings	Traffic Grey A	7042
4.	415 V Welding sockets	Grass green	6010
5.	230 V Power sockets	Yellow orange	2000
6.	24 V transformer sockets, lamp sets etc.	Sulfur yellow	1016

© 2022 MECON Limited All rights reserved

APPENDIX – 1

TABLE –1A

SELECTION OF POWER COMPONENTS, WIRING & CABLE SIZES FOR CONTINUOUS DUTY CAGE MOTOR DRIVES

Rating of MCCB / MPCB / Contactors shall be selected based on type-2 co-ordination chart.However, Contactor rating can not be less than as specified below.

Contactor rating mentioned below are also applicable for input/bypass/output contactor in VFD panels.

Motor rating at S1 duty (kW)	Minimum rating of Power contactor Amps (AC3)	Minimum size of Cu wire / flat in sq. mm for internal power connection	Minimum size of XLPE insulated Power cable in sq.mm. (if not specified then consider Aluminium cable)
Up to 3.7	25	4	4x2.5 Copper Cable.
5.5	25	4	4X6 Aluminium cable
7.5	25	4	4X6
11	45	6	4X10
15	45	10	4X16
18.5	70	16	3.5X25
22	70	16	3.5X25
30	110	35	3.5X50
37	110	35	3.5X50
45	170	50	3.5X70
55	170	70	3.5X95
75	250	95	3.5X120
90	250	30X5 Flat	3.5X185
110	400	30x5 Flat	3.5X185
125/132	400	30x5 Flat	2(3.5x120)
160	630	40x5	2(3.5x120)
180/200	630	30x10	3(3.5x185)

© 2022 MECON Limited All rights reserved

APPENDIX – 2

TYPICAL SIGNAL EXCHANGE DIAGRAMS

CASE :- I Signal exchange for **Distribution Transformer**
(Transformer room is not in HT Switch board Building)

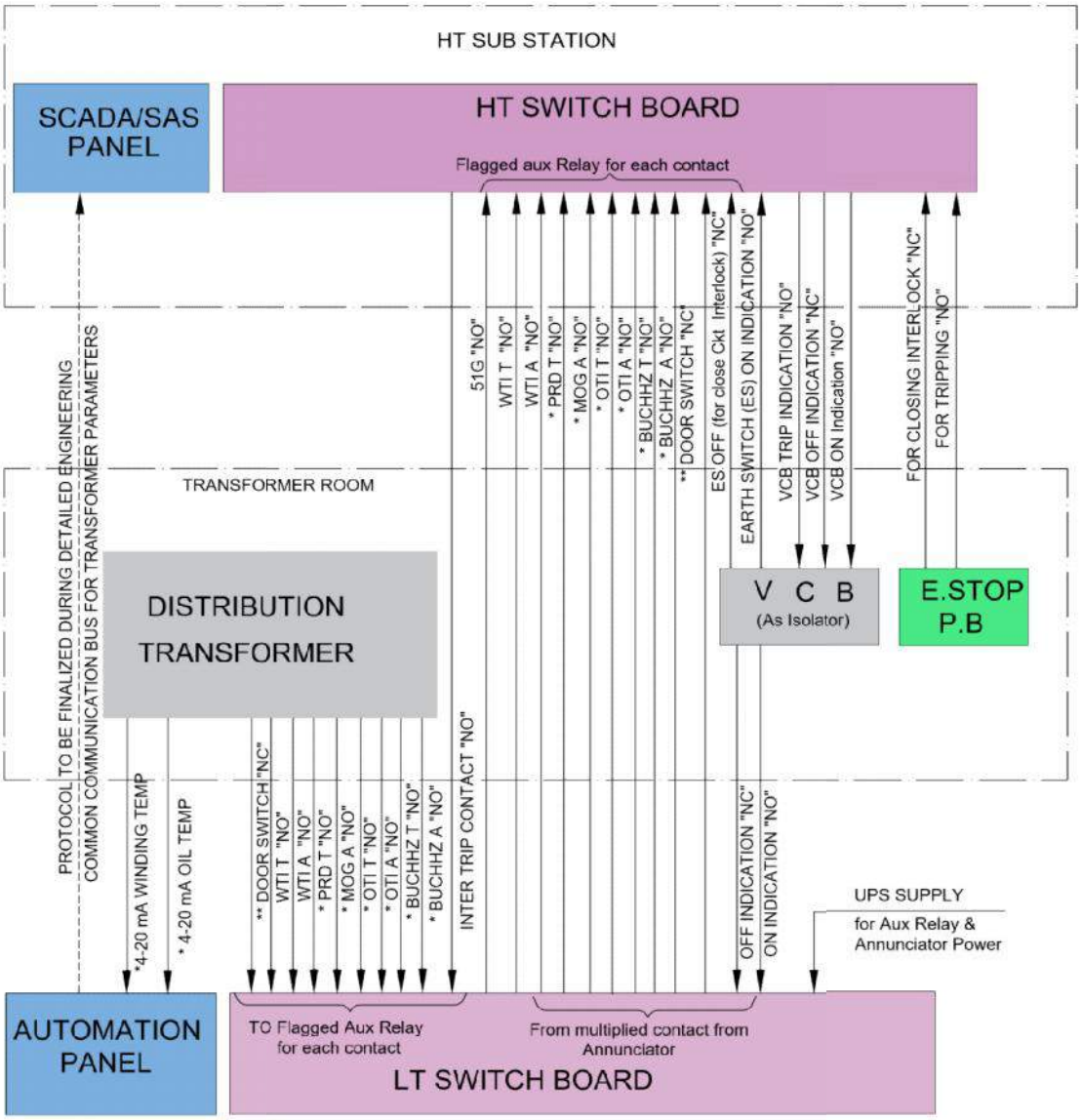

* These signals not applicable for Dry type transformer
** Door switch only applicable for Dry type transformer

NOTE:- Signal exchange drg is conceptual . All other signals & battery limits shall be as per TS/GTS

© 2022 MECON Limited All rights reserved

CASE :- II Signal exchange for **Distribution Transformer**
(Transformer room is in HT Switch board Building)

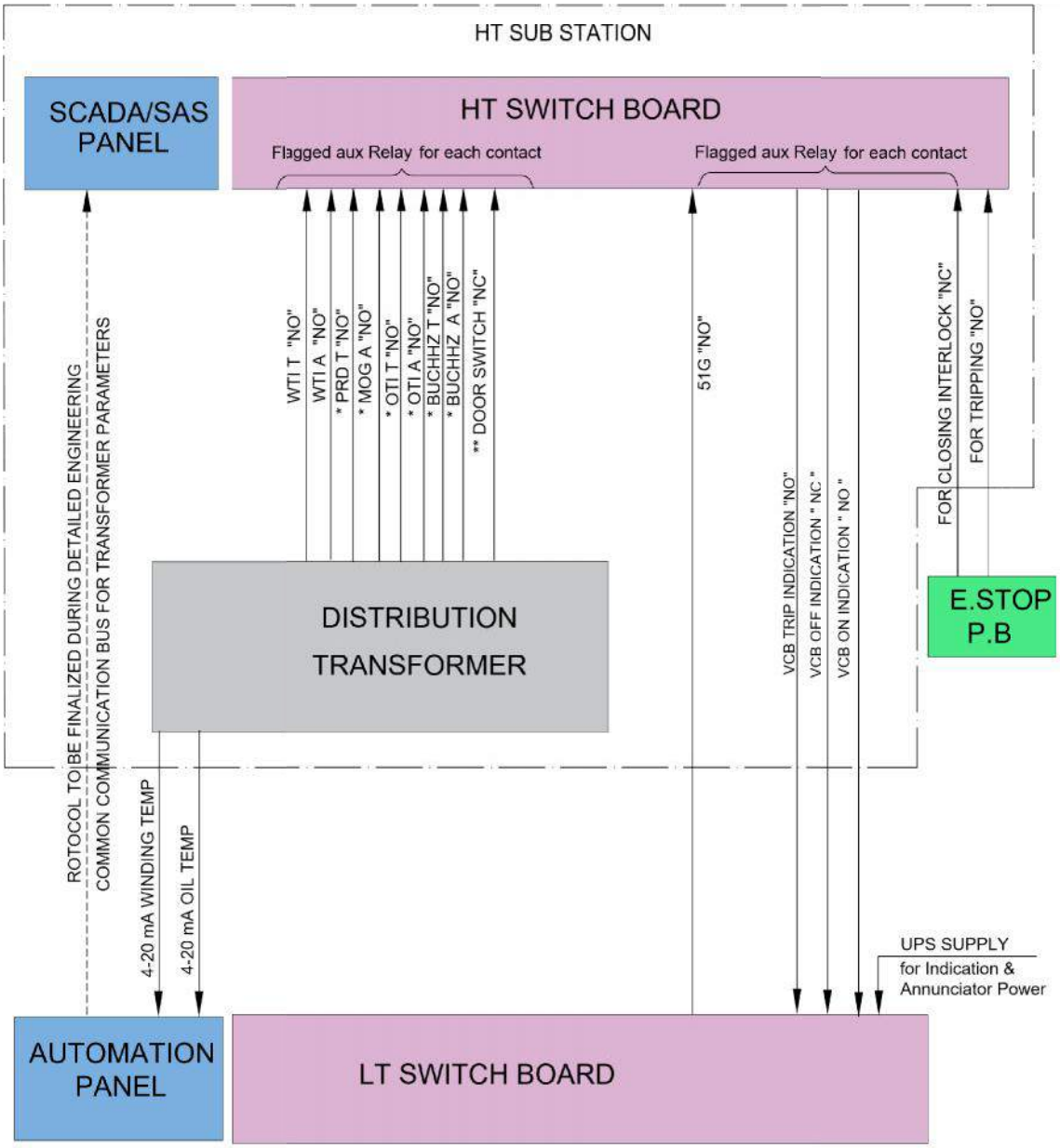

* These signals not applicable for Dry type transformer
** Door switch only applicable for Dry type transformer
All other signals as per TS shall be complied

NOTE:- Signal exchange drg is conceptual . All other signals & battery limits shall be as per TS/GTS

© 2022 MECON Limited All rights reserved

CASE : III Signal exchange for HT DOL MOTOR

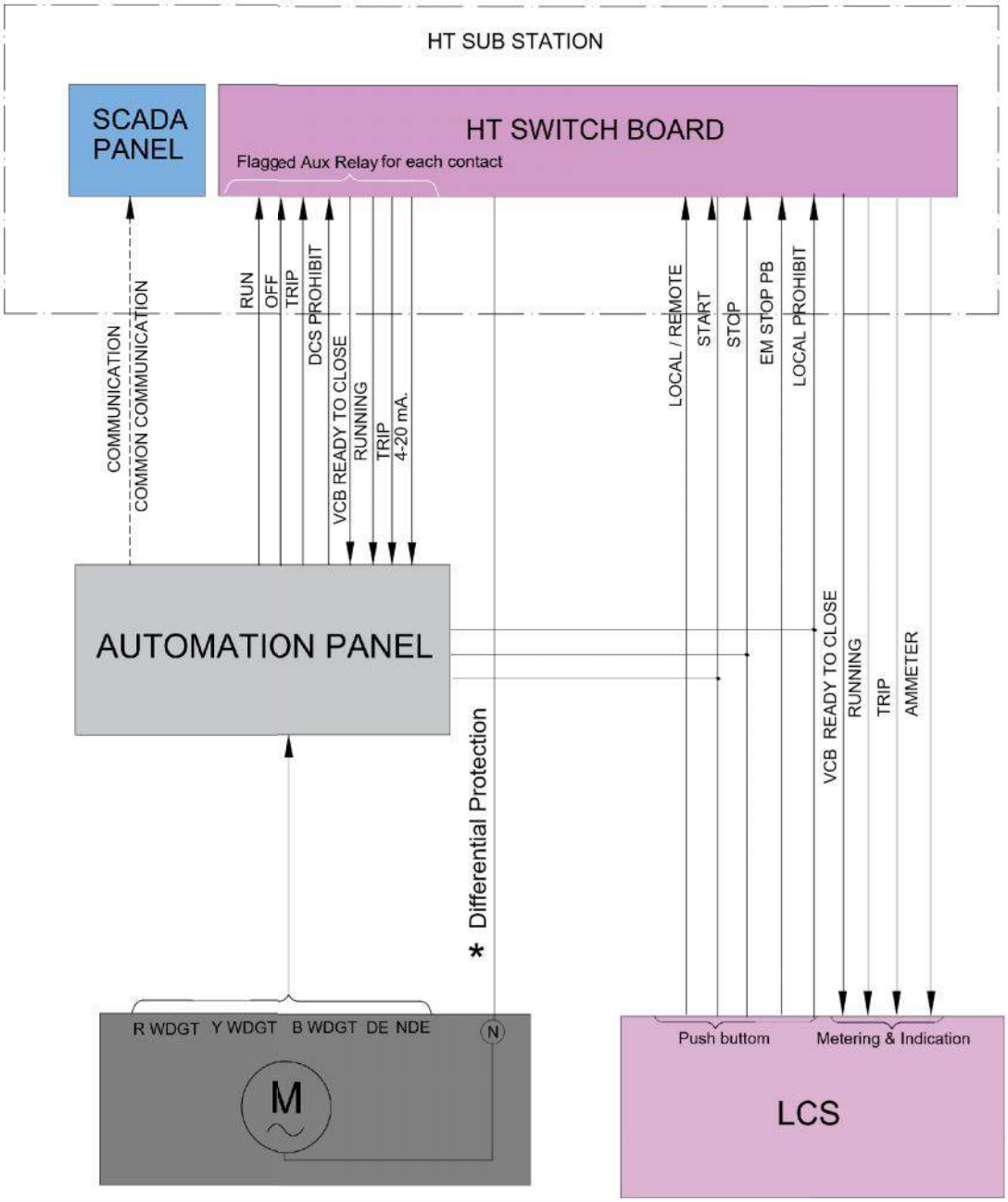

* For motor of 1000 kw & above

NOTE:- Signal exchange drg is conceptual . All other signals & battery limits shall be as per TS/GTS

© 2022 MECON Limited All rights reserved

CASE :- IV Signal exchange for **MV Drive** system with integrated converter transformer (Converter Transformer **is in HT** Sitchboard building)

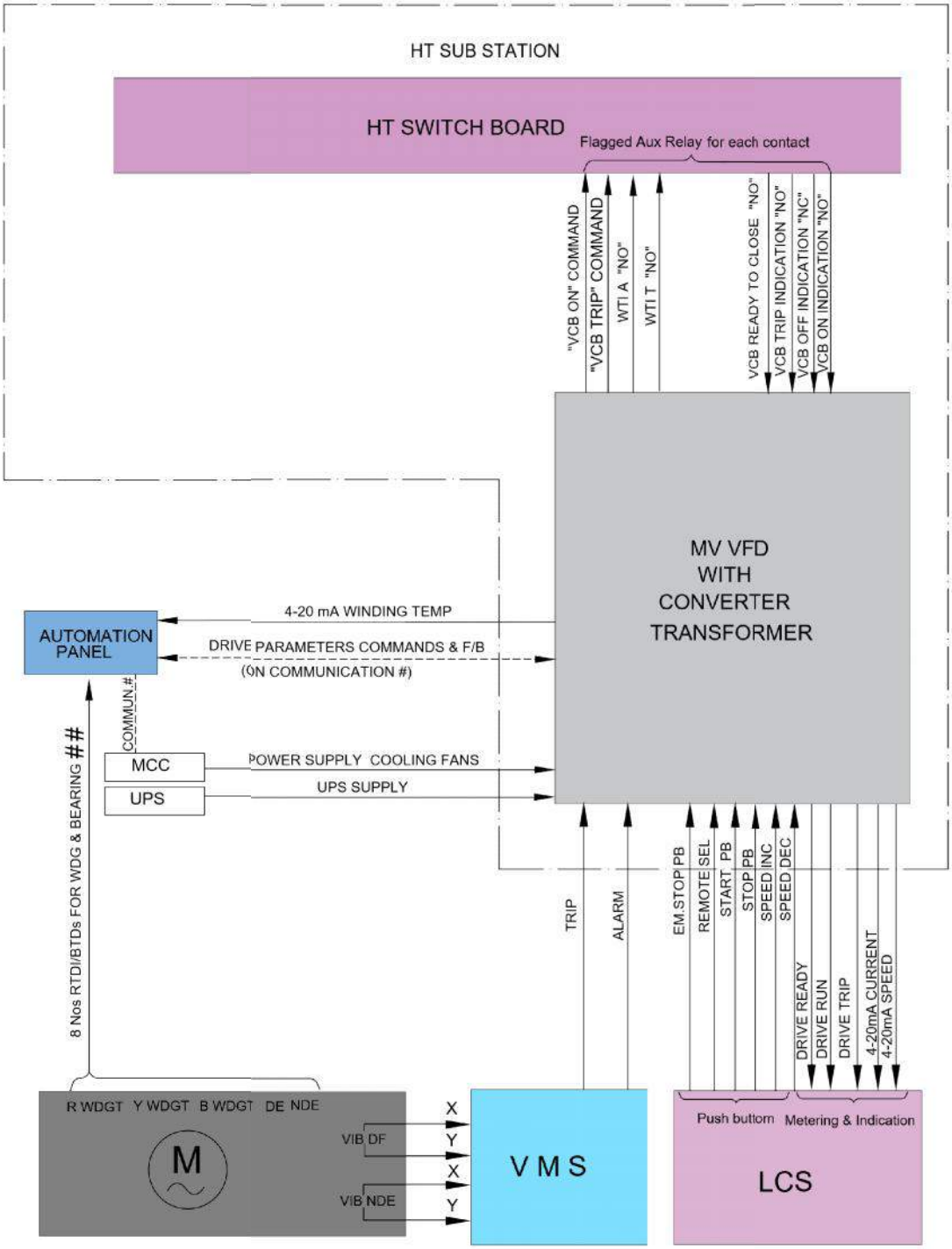

Can also be hardwired as per DE
* RTD Signal can also go to VFD in addition to PLC
ALL OTHER SIGNALS AS PER TS & REQUIREMENT SHALL BE COMPLIED

NOTE:- Signal exchange drg is conceptual . All other signals & battery limits shall be as per TS/GTS

© 2022 MECON Limited All rights reserved

CASE :- V Signal exchange for **MV Drive** system with separate converter transformer (Converter Transformer **is in HT** Switch board Building)

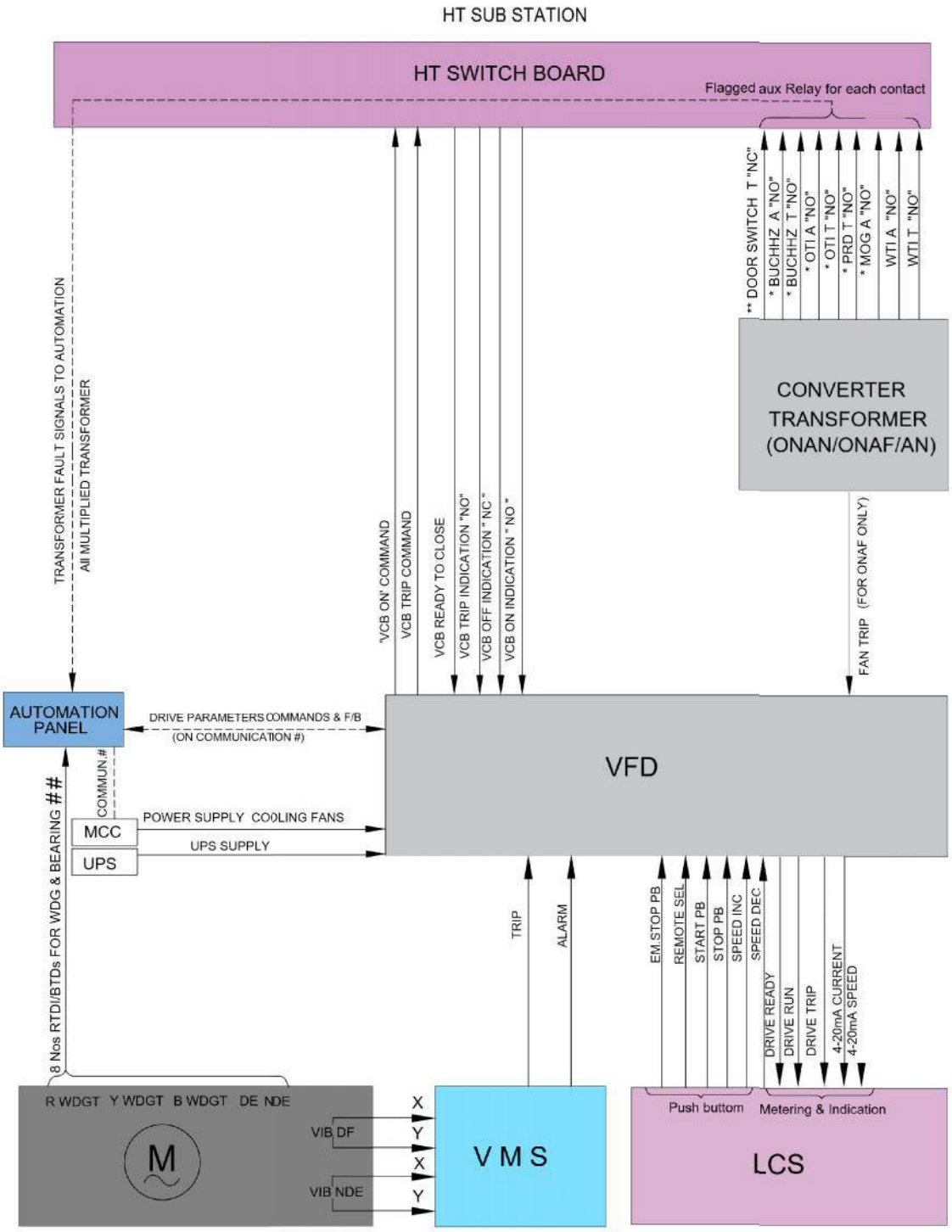

* These signals not applicable for Dry type transformer
** Door switch only applicable for Dry type transformer
All other signals as per TS & technical requirement shall be complied
Can also be Hard Drivede as per DE

NOTE:- Signal exchange drg is conceptual . All other signals & battery limits shall be as per TS/GTS

© 2022 MECON Limited All rights reserved

CASE :- VI Signal exchange for **MV Drive** system with integrated converter transformer (Converter Transformer is not in HT Sitchboard building)

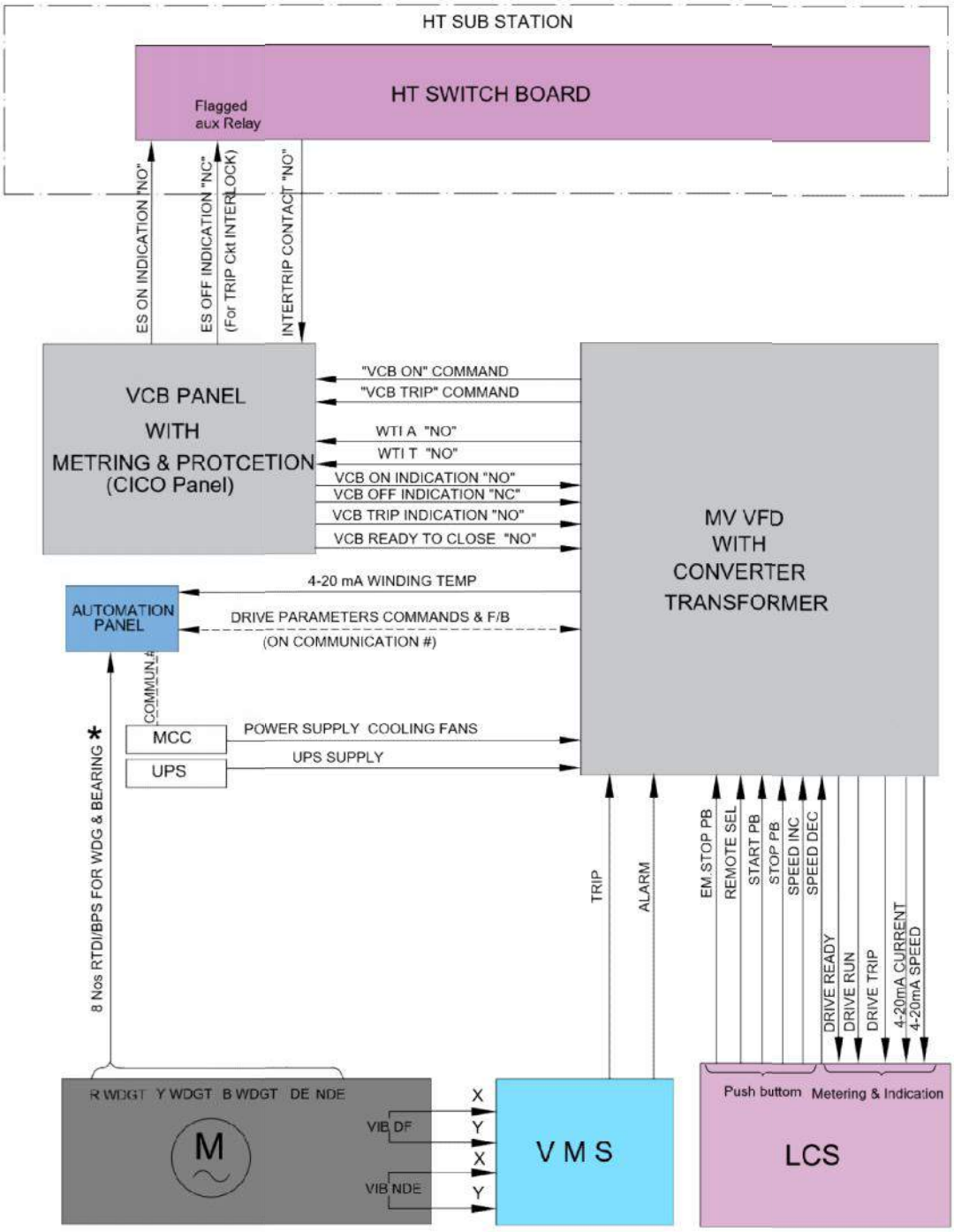

Can also be hardwired as per DE
* RTD Signal can also go to VFD in addition to PLC
# # ALL OTHER SIGNALS AS PER TS & REQUIREMENT SHALL BE COMPLIED
NOTE:- Signal exchange drg is conceptual . All other signals & battery limits shall be as per TS/GTS

© 2022 MECON Limited All rights reserved

CASE :- VII Signal exchange for **MV Drive** system with separate converter transformer (Converter Transformer is not in HT Switch board Building)

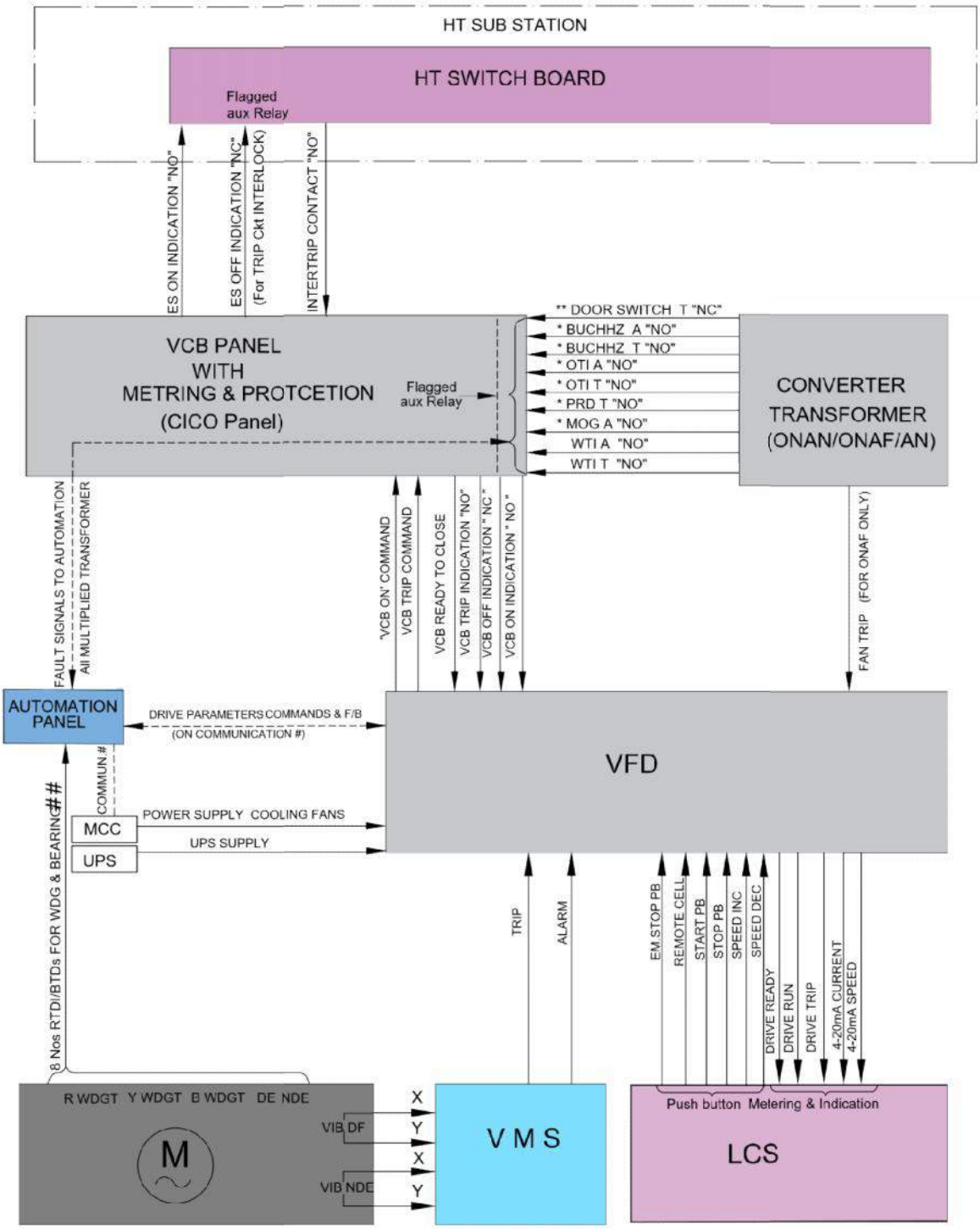

* These signals not applicable for Dry type transformer
** Door switch only applicable for Dry type transformer
\# All other signals as per TS & technical requirement shall be complied
\#\# Can also be Hard Drivede as per DE
NOTE:- Signal exchange drg is conceptual. All other signals & battery limits shall be as per TS/GTS

© 2022 MECON Limited All rights reserved

APPENDIX – 3

LIST OF ABBREVIATIONS

1) **ACB –** AIR CIRCUIT BREAKER
2) **ACDB –** AC DISTRIBUTION BOARD
3) **AFE –** ACTIVE FRONT END
4) **AN –** AIR NATURAL
5) **ASS –** AMMETER SELECTOR SWITCH
6) **BSS –** BELT SWAY SWITCH
7) **CACA –** CLOSED AIR CIRCUIT AIR COOLED
8) **CACW –** CLOSED AIR CIRCUIT WATER COOLED
9) **CDF –** CYCLIC DURATION FACTOR
10) **CICO –** CABLE IN CABLE OUT
11) **CMCC –** CONVENTIONAL MOTOR CONTROL CENTER
12) **CRCA –** COLD ROLLED COILED ALUMINUM
13) **CRGO –** COLD ROLLED GRAIN ORIENTED
14) **CT –** CURRENT TRANSFORMER
15) **DCDB –** DC DISTRIBUTION BOARD
16) **DCS –** DISTRIBUTED CONTROL SYSTEMS
17) **DE –** DRIVING END
18) **DG –** DIESEL GENERATOR
19) **DOL –** DIRECT ONLINE
20) **DSL –** DOWN SHOP LEAD
21) **ECR –** ELECTRICAL CONTROL ROOM
22) **EF –** EARTH FAULT
23) **ELCB –** EARTH LEAKAGE CIRCUIT BREAKER
24) **EOCR –** ELECTRONIC OVER CURRENT RELAY
25) **EPR –** ETHYLENE PROPYLENE RUBBER
26) **ESP –** ELECTROSTATIC PRECIPITATOR
27) **FF –** FOUNDATION FIELD BUS
28) **FIFO –** FIRST IN FIRST OUT
29) **FRLS –** FLAME RETARDANT LOW SMOKE

© 2022 MECON Limited All rights reserved

30) **HMI –** HUMAN MACHINE INTERFACE
31) **HPSV –** HIGH PRESSURE SODIUM VAPOUR
32) **HRC –** HIGH RUPTURING CAPACITY
33) **HT MCC –** HT MOTOR CONTROL CENTER
34) **IGBT –** INSULATED GATE BIPOLAR TRANSISTOR
35) **IMCC –** INTELLIGENT MOTOR CONTROL CENTER
36) **IPSS –** INTERPLANT STEEL STANDARDS
37) **IS –** INDIAN STANDARDS
38) **IWC –** INTELLIGENT WEIGHING CONTROLLER
39) **LCI –** LOAD COMMUTATED INVERTER
40) **LCS –** LOCAL CONTROL STATION
41) **LCSS –** LOAD CENTER SUBSTATIONS
42) **LIW –** LOSS IN WEIGHT
43) **MCB –** MINIATURE CIRCUIT BREAKER
44) **MCBDB –** MCB DISTRIBUTION BOARD
45) **MCC –** MOTOR CONTROL CENTER
46) **MCCB –** MOULDED CASE CIRCUIT BREAKER
47) **MCP –** MOTOR CONTROL PANEL
48) **MD –** MAXIMUM DEMAND
49) **MFM –** MULTIFUNCTION METER
50) **MLDB –** MAIN LIGHTING DISTRIBUTION BOARD
51) **MPR –** MOTOR PROTECTION RELAY
52) **NDE –** NON DRIVING END
53) **NI-CD –** NICKEL CADMIUM BATTERY
54) **NIMCC –** NON INTELLIGENT MOTOR CONTROL CENTER
55) **OC –** OVER CURRENT
56) **OF –** OVER FREQUENCY
57) **ONAN –** OIL NATURAL AIR NATURAL
58) **PB –** PUSH BUTTON
59) **PCC –** POWER CONTROL CENTER
60) **PCS –** PULL CORD SWITCH
61) **PDB –** POWER DISTRIBUTION BOARD
62) **PG –** PULSE GENERATOR

© 2022 MECON Limited All rights reserved

63) **PLC –** PROGRAMMABLE LOGIC CONTROLLER
64) **PMCC –** POWER AND MOTOR CONTROL CENTER
65) **PT –** POTENTIAL TRANSFORMER
66) **PVC –** POLYVINYL CHLORIDE
67) **PWM –** PULSE WIDTH MODULATION
68) **RDOL –** REVERSIBLE DIRECT ONLINE
69) **RI/O –** REMOTE INPUT OUTPUT
70) **SCADA –** SUPERVISORY CONTROL AND DATA ACQUISITION
71) **SLDB –** SUB LIGHTING DISTRIBUTION BOARD
72) **SMF –** SEALED MAINTENANCE FREE
73) **SQIM –** SQUIRREL CAGE INDUCTION MOTOR
74) **TEFC –** TOTALLY ENCLOSED FAN COOLED
75) **TENV –** TOTALLY ENCLOSED NON VENTILATED
76) **TR –** TRANSFORMER RECTIFIER
77) **UF –** UNDER FREQUENCY
78) **UPS –** UNINTERRUPTED POWER SUPPLY
79) **VCB –** VACCUUM CIRCUIT BREAKER
80) **VFD –** VARIABLE FREQUENCY DRIVE
81) **VSS –** VOLTMETER SELECTOR SWITCH
82) **WTI –** WINDING TEMPERATURE INDICATOR
83) **XLPE –** CROSS LINKED POLYETHYLENE
84) **ZSS –** ZERO SPEED SWITCH

© 2022 MECON Limited All rights reserved

UTKARSHA ALUMINIUM DHATU NIGAM LIMITED

GENERAL TECHNICAL SPECIFICATION FOR ELECTRICS, DRIVE & CONTROL EQUIPMENT SPECIFICATION (GS 03 PART-I SECTION- B)

MECON LIMITED
RANCHI – 834 002

No. MEC/S/11/35/Q7R6/GTS/01/R0 **JUNE' 2022**

© 2022 MECON Limited All rights reserved

LIST OF CONTENTS

PART –I:SECTION - B

Clause No.	Contents	Page No
1.0	VOID	1
2.0	HT Switch Board	1
2.1	HT MCC	20
3.0	CABLE IN CABLE OUT (CICO) panel for VFD Transformer Isolation & Control	21
4.0	HT VCB as Isolator panel for Distribution Transformer Isolation	21
5.0	Battery Bank, Charger & DCDB	22
6.0	**Transformers**	27
6.1	Oil Type Distribution transformer	27
6.2	Oil type Converter Transformer	36
6.3	Dry Type Distribution Transformers- Resin cast	38
6.4	Dry Type Converter Transformers- Resin cast	47
7.0	**LT Bus duct**	49
8.0	**415 V Switchgear (PCC)**	53
9.0	**Power Distribution Board (PDB)**	66
10.0	**Motors & Field devices**	67
10.1	Low voltage squirrel cage induction motors	67
10.2	Low voltage slip ring induction motors	70
10.3	Roller Table Motors (Torque motors)	73
10.4	High voltage sq. cage induction motors	73
10.5	Synchronous Motors	77
10.6	LT Inverter Duty Motor	80
10.7	DC Electromagnetic brake (Shoe type)	84
10.8	Field Switches	85
10.9	Power Resistance	85
11.0	**Individual Drive Control Level**	86
11.1	Variable Frequency Drive (VFD)	86
11.2	AC Line Reactor	94
11.3	Load Commutated Inverter (LCI)	95
11.4	Motor Control Centre (Intelligent/Non-Intelligent)	98
11.5	Stand Alone Starter OR MCP panel	108
11.6	Soft Starter	113
11.7	Local Control Stations	119
11.8	Control Desk	121
12.0	**Specifications of major components**	123
12.1	Moulded Case Circuit Breaker (MCCB)	123
12.2	AC Contactors	124
12.3	Current transformers	125
12.4	Control transformers	125
12.5	Indicating instruments	125
12.6	Thermal Overload Relays	125
12.7	Electronic Overcurrent Relays (EOCR)	126

© 2022 MECON Limited All rights reserved

Clause No.	Contents	Page No
12.8	Magnetic Overload Relays	126
12.9	Push Buttons	127
12.10	Indicating Lamps	128
12.11	Miniature Circuit Breakers (MCB)	128
12.12	Selector Switches	129
13.0.	**Automation System**	130
13.1	General	130
13.2	Programmable Logic Controller (PLC)	137
13.3	Human Machine Interface (HMI), Work Station & Engineering Station	146
13.4	Server	148
13.5	Software	148
13.6	Large Screen Display System	150
14.0	Uninterrupted Power Supply	151
15.0	Electrics for Cranes & Hoists	161
16.0	Electronic Weighing & Weighing Controller System	185
17.0	**CABLES**	192
17.1	33 kV (E) HT XLPE cables	192
17.2	11 KV/6.6kV (UE) HT XLPE cables	195
17.3	1.1 kV XLPE LT Power Cable	196
17.4	1.1 kV Grade PVC Control Cable	198
17.5	1.1 kV Grade Screened /Special Cable	200
17.6	Heat resistant cable	200
17.7	Flame Retardant Low Smoke (FRLS) Cables	201
18.0	Illumination	203

© 2022 MECON Limited All rights reserved

PART – B - EQUIPMENT SPECIFICATIONS (To be read always in conjunction with Design Basis as stated in part – A above)

1.0 VOID

2.0 HT SWITCHBOARD

1.0 TECHNICAL PARTICULARS AND DESIGN PARAMETERS

Sl. No.	PARTICULARS	HT SWBD				
1.	Type	Metal Enclosed, Floor Mounting, Free standing, natural air cooled type				
2.	Service	Indoor				
3.	Enclosure IP	IP4X or better				
4.	Standard					
	i) Switchboard	IS/IEC 62271-1,IS/IEC 62271-200 & IEC 60694				
	ii) Circuit Breaker	IS/IEC 62271-100				
	iii) Vacuum Contactor	IEC 62271-106				
	iv) Instrument Transformers	IEC 61869- 1, 2, 3				
5.	Nominal system voltage (kV)	3.3	6.6	11	22	33
6.	Max. system voltage (kV)	3.6	7.2	12	24	36
7.	Power frequency withstand voltage (kV) rms for 1 minute	10	20	28	50	70
8.	Peak impulse test withstand voltage (kVp)	40	60	75	125	170
9.	No. of phases and frequency	3ph. 50 Hz				
10.	Design Ambient	As per max ambient temp in Sec-A				
11.	Design Altitude	As per design altitude in Sec-A				
12.	DC Control Voltage	As per standard voltages in Sec-A				
13.	Spring charge motor voltage	Same as DC control voltage				
14.	Aux supply voltage	230V AC				
15.	Control voltage for 2nd trip coil	From UPS, as per UPS voltage				
16.	Busbar					
16.1	Bus Color code	RYB				
16.2	Busbar Material	Electrolytic Grade Copper				

© 2022 MECON Limited All rights reserved

Sl. No.	PARTICULARS	HT SWBD
16.3	Busbar Rated Current	Next higher standard rating as per the calculated load requirement
16.4	Short Circuit Rating (kA rms) & withstand duration	As per short ckt rating in Sec-A
17	Internal Arc withstand duration for rated short circuit rating, AFLR	1 sec
18	System Earthing	As per standard voltage in Sec-A
19.	Circuit Breaker	
19.1	Continuous Current Rating	As per the load requirement fulfilling short circuit requirement
19.2	Short Circuit Rating	As per short ckt rating in Sec-A
19.3	Rated making Current	2.5 times the Short circuit rating
19.4	No of trip coils	Two (2)
19.5	Duty cycle	O-0.3s-CO-3min-CO
19.6	Duty class	E2, M2 & C2
20.	CT Ratio	Secondary Current 1A (Primary as per design & load)
21.	Potential Transformer	
21.1	Configuration for resistance earthed/ Unearthed	STAR/ STAR/ STAR/ Open Delta
21.2	Configuration for earthed system	STAR/ STAR/ STAR/ STAR
21.3	Ratio	(HT/√3) / (0.11/√3) / (0.11/√3) / (0.11/3) or (0.11/√3) kV
21.3	VA Burden	Actual as per the calculation during DE. 50% loading to be considered.
21.4	Accuracy	0.5/ 3P/ 3P
22.	Control & auxiliary supply changeover scheme	Auto with Manual provision
23	Type tests to be conducted, if any	Type TC for same rating and similar design panel to be submitted.
24	Clearance in air	As per IEC / Type tested design unless specified otherwise
25.	Control & Relays location	Mounted on LV chamber of breaker panel, unless specified otherwise.
26.	Termination requirement	Cable from bottom
27.	Requirement of Base Frame and height	To be provided, factory build, 40mm height

© 2022 MECON Limited All rights reserved

Sl. No.	PARTICULARS	HT SWBD
28.	VCB/ VC Type (Floor rolling trolley mounted or cassette type)	Floor rolling trolley mounted
29.	Requirement of Uniform depth	All feeders in one switchboard shall have same depth.
30.	Type of earthing provision – Earthing truck/ Integral earth switch	Fault making type, to be considered as specified in TS
31.	Numerical Relay port- RJ45(Copper) or FO	FO Ports, 2 Nos, PRP compliant
32.	Surge Suppressor requirement	To be provided in all feeders
33.	Requirement of Withdrawable bus link panel	Required in the bus riser panel
34.	Requirement of Voltage Presence Indicator (VPI)	Required. To be provided with indication and PFC for interlock
35.	Gland plate thickness	For 3 core cable – 3.0mm CRCA For single core cable – 5.0mm AL

2.0 General Requirement

1) The switchboard shall be of metal clad, single busbar, self standing, indoor cubicle type, fitted with Vacuum circuit breakersin fully draw out execution.

2) The circuit breaker used in the panel shall be fully type tested as per latest applicable in IS/IEC standard.

3) The panel shall be internally arc compliant (IAC) tested for AFLR configuration in line with IEC 62271-200 for the specified rating and duration. Type test report for the same shall be submitted during drawing approval stage.

4) The panel shall be constructed with CRCA sheet steel or Aluzinc sheet steel. For Aluzinc construction, doors and covers shall be painted as per the approved colour. For CRCA construction, complete panel shall be painted. The sheet steel thickness shall be as per the IAC & IP type tested design.

5) The cubicle shall be provided with a position changing arrangement to move the breaker truck and change position from outside without opening the cubicle door. Facilities for pad locking in each position shall be provided.

6) All circuit breaker trucks of same rating shall be identical in all respects and shall be interchangeable with similar breaker panel. However, it shall not be possible to insert circuit breaker of lower current rating into cubicles of higher current rating.

7) All circuit breakers in the in a particular project shall be of same make, model & design expect for the continuous current rating.

8) Manufacturer of the HT switchboard panel shall be same as the manufacturer of Circuit Breakers.

9) Where lockable local/remote selector switch is called for , it shall be ensured that:

i) The breaker can be operated locally only if the breaker truck is in the test position and the local/remote selector switch is in local position.

© 2022 MECON Limited All rights reserved

ii) The breaker can be operated from remote panel (in shop) only when the breaker truck is in service position and the local/remote selector switch is in remote position.

iii) The breaker can be tripped locally regardless of the position of the breaker truck or local/remote selector switch.

3.0 Mechanical Design

1) Each cubicle shall be of sheet steel clad, floor mounted, free standing design, compartmentalized construction confirming to loss of service continuity of LSC2B and shall have separate compartments for VCB, bus bars, CTs and outgoing cables and metering & protection devices.

2) Each HT compartment shall be isolated to confirm to internal arc compliance requirement.

3) Switchboard shall be extensible on both sides.

4) Minimum panel width shall be 800 mm upto 11kV switchboard

5) All supporting insulators in bus chamber shall be easily accessible with detachable covers for easy replacement.

6) CTs shall be located in such a way that that they are easily accessible from rear of the panel.

7) Removable lifting arrangement for each transport unit shall be provided.

8) Doors shall be provided with padlocking provision and the door shall not be forming part of the draw-out truck

9) Separate back covers with handles shall be provided for bus chamber, and cable chamber. The back cover shall be necessarily in two parts for easy handling.

10) Independent explosion vent shall be provided for each HT compartment i.e CB chamber, bus chamber, cable chamber to comply to the internal arc requirement

11) Earthed metallic barriers between compartments and between vertical sections of adjacent panels shall be ensured.

12) Control cables entry shall be from bottom and on front side.

13) Screw wire mesh in the power cable chamber of incoming & outgoing feeders shall be provided.

14) Suitable slotted channel shall be provided in the cable chamber for clamping the cable for support.

15) The controls, indicating lamps, relays and meters shall be mounted on breaker panel in separate control cubical and shall be mounted for uniform appearance.

16) A manually operated device shall be provided to enable manual charging of closing springs.

17) Manual / Mechanical tripping arrangement shall be for each cubical for emergency tripping of CBs.

18) Mechanical and electrical Anti pumping feature shall be provided for all breakers

19) Each switchboard cubicle shall have mimic diagram in the front and rear of the panel. This shall be painted. Colour of strip shall be finalized during detailed engineering. Mimic shall be 10mm wide for busbars and 7mm wide for others. Stickers are not acceptable.

20) Continuous earth bus shall be provided throughout the board.

© 2022 MECON Limited All rights reserved

21) The position of various control switches, push buttons, levers etc requiring manual operation shall be at a height not less than 450mm and shall not exceed 1850 mm.

22) The Phase – Phase and Phase – Earth clearances shall be as per the type tested design unless specified otherwise.

23) CT/PT ratio and class, breaker rating, BIL should be marked on anodized AL plate label and shall be provided at rear of each switchgear panel.

24) Each control cubicle shall have 5-15A, 240V switch with 6 pin socket, space heater with thermostat, protection MCB, door switch operated LED illumination lamp.

25) CB & Cable compartment shall be provided with separate space heater & separate thermostat with common Ammeter of 48 sqmm size and MCB.

26) 'Bus link' truck cannot be withdrawn with the buscoupler in 'Service' position.

4.0 Main Bus Bar and Connections

1) Power buses of EC grade aluminium alloy equivalent to 63401 range 2 as per IS-5082 –1981 or high conductivity electrolytic grade copper as per IS : 613-1984 as per technical particular. The bus bars shall be silver plated at joints.

2) The busbars (horizontal as well as vertical) shall be insulated by heat shrinkable, non tracking, low absorption type **full voltage insulation grade sleeving confirming to** International standard.

3) Reusable removable shroud of full voltage insulation grade shall be provided at all joints in busbar chamber.

4) The continuous current rating of the main horizontal bus shall not be less than the rating of the incomers, unless specified otherwise.

5) The vertical bus rating

For incomer	:	Not less than that of horizontal bus
For outgoing	:	Not less than that of the outgoing breaker, irrespective of relay setting or CT ratio.

6) Jumpers in cubicle shall be of same current rating as breaker.

7) Final operating temperature under continuous operation in enclosure shall be limited as per IEC62271-1 considering the given design ambient temperature.

8) Both horizontal and vertical bus bars to be designed and supported to withstand the thermal and dynamic stress corresponding to rated short time and peak withstand current specified.

9) Cross-section of main horizontal bus to be uniform throughout the switchboard.

10) Busbar coding shall be done as specified in technical particulars. Phase identification by color in each panel shall be done.

11) Bus bar joints and tap off connections of bolted type with type of bolts as per the short circuit type tested panel.

12) Busbar supports shall be provided as per the short circuit type tested design. Bus bar support of non-hygroscopic material having high impact and dielectric strength with an anti tracking contour shall be used.

© 2022 MECON Limited All rights reserved

5.0 Auxiliary Buses for Control Supply

1) Control supply buses for AC and DC
2) PT secondary voltage bus
3) UPS bus as applicable as per the technical particulars
4) These busses shall be either through wires of suitable size or electrolytic grade tinned copper busbar as per the technical particulars.

6.0 Control & Auxiliary Supply

1) Control & Auxiliary supply buses shall run throughout the switchgear.
2) Two numbers DC incoming feeder shall be taken in each switchboard controlled by MCB's. Failure of any DC supply shall be monitored & annunciated in the switchboard as well as PFC for remote annunciation shall be given.
3) Two numbers AC incoming feeder for auxiliary supply shall be taken in each switchboard controlled by MCB's. Failure of any AC supply shall be monitored & annunciated in the switchboard as well as PFC for remote annunciation shall be given.
4) Wherever UPS bus has been specified for 2nd trip coil, two numbers UPS incoming feeder for 2nd trip coil shall be taken in each switchboard controlled by MCB's. Failure of UPS supply to switchboard shall be monitored & annunciated in the switchboard as well as PFC for remote annunciation shall be given.
5) Each feeder panel shall have one MCB each for controlling its AC & DC supply.
6) Sub circuits shall be protected with MCB in each feeder panel for indication lamps, closing circuit and tripping circuits separately.
7) Auto changeover feature and manual changeover option shall be provided for both AC & DC aux supply using timers and contactors and auto-manual changeover selector switch, unless specified otherwise.

7.0 Internal Control Wiring

1) Control wiring shall be carried out by 1100V grade FRLS PVC insulated, single core multi stranded copper wire of minimum cross section 1.5 sq. mm except for CT circuits which shall be 2.5 sqmm.
2) Wire from CT chamber to relay chamber shall be run in heatproof earthed metallic flexible conduits to have protection against heat & mechanical damage due to flash over in HV chamber.
3) Wiring and terminal arrangement for all panels shall be carried out as per approved scheme.
4) Flexible wires protected against mechanical damage for wiring to door mounted devices shall be provided. No bunch of wire shall contain more than 12 wires.
5) Wires identified at each end in accordance with schematic diagrams by printed type ferrules.
6) All connections external to a feeder, all the auxiliary contacts of the breaker shall be brought to terminal blocks.
7) Interconnection between panels of adjacent shipping sections to be brought out to a separate terminal block.
8) Wiring shall not be joined or tied between the terminal points.

© 2022 MECON Limited All rights reserved

9) Not more than two connections shall be provided on any one terminal.

10) All spare contacts shall be wired to TB.

11) All telemetering signals shall be wired to separate set of terminal strips.

12) All internal control wiring shall be terminated with **round lugs only.**

8.0 External Terminations

8.1 Control Terminations

1) **800V grade** stud type terminal blocks made of polyamide material (STH4 of connectwell or OAT6 of Elmex or Equivalent), washers, nuts and identification strips shall be provided.

2) All terminals going out of the switch board shall be brought to a separate terminal block marked "External Termination". These will be easily accessible. Terminal blocks in separate groups shall be provided for SCADA/ Automation, remote control panels, transformer marshalling boxes, local push button stations, etc.

3) External terminal block shall be provided in the relay chamber with proper truff arrangement for cable dressing. Terminal blocks shall be placed separately for internal looping and external looping.

4) All CT and PT wires shall be first brought to disconnecting type TBs.

5) All metering CT-PT wires shall be brought to test terminal blocks before connecting to circuits.

6) Overall 20% spare terminals in each feeder shall be provided. The spare terminals shall be distributed appropriately during design stage.

7) Gland plate for control cables shall be of adequate size to accommodate and to facilitate glanding of all the control cables coming from external equipment.

8.2 Power Terminations

1) Suitable for accepting cable/bus trunking as specified/ required.

2) Sufficient space and support arrangement inside each panel to accommodate HT cable termination kits and sealing kits suitable for the size and number of XLPE cables.

3) Minimum height of termination point from gland plate shall be 900mm for 33kV switchboard and 600mm for 11kV and below switchboard.

4) Rear extension is not permitted, unless specified otherwise. Dummy panels shall be provided adjacent to the feeders, where the required number of cable terminations cannot be accommodated in the cabling chamber of the feeder.

5) Where more than one cable have to be terminated per unit, the arrangement shall permit connection and disconnection of cables separately without disturbing other cables.

9.0 Earthing Devices

1) Either integral earthing switch or separate earthing truck shall be provided to facilitate earthing of busbars and any feeder circuit.

2) The earthing truck shall have making capacity same as associated switchboard having annunciation, indication and interlock scheme. Alternatively, front operated mechanically interlocked earthing switch with making capacity same as associated switchboard shall be provided.

© 2022 MECON Limited All rights reserved

3) Earthing truck shall have PT and alarm provision. Minimum 1 no. earthing truck for feeder earthing and 1 no. for busbar earthing shall be provided for each board unless specified otherwise. It shall not be possible to use bus earthing truck for feeder earthing and vice-versa. In case more number of earthing trucks are required due to different width of panel, same shall be provided.

4) Wherever an integral earth switch is provided, it shall be possible to switch on the earthing switch only when the breaker truck is in the isolated position.

5) Interlock provision shall be there so that incomer can not be closed if bus earthing device is connected.

6) Indicating lamps shall be provided for status of earth connection, on all outgoing feeder for “Feeder earthed” and on incomers for “Bus earthed”.

7) Suitable sheet steel enclosure shall be provided for covered parking of earthing trucks within the substation building.

10.0 Protective Earthing

1) Continuous earth bus of minimum size 50x6 and meeting requirement as per IEC 62771-200 cl 5.3.2 made of copper, designed to carry the peak short circuit and short time fault current as specified for the switchboard.

2) Provided at the bottom extending throughout the length of the board, bolted/brazed to the frame work of each panel with an earthing terminal at each end for terminating external earth conductor.

3) All non-current carrying metal work (including metallic cases of instruments and other panel mounted components effectively) bonded to the earth bus.

4) Hinged doors earthed through flexible multi-stranded insulated copper wire.

5) Looping of earth connection resulting in loss of earth connection to other devices when the loop is broken not permitted. No looping is allowed for connection of multiple components to earth bus.

6) Withdrawable units provided with self aligning, spring loaded, copper earth contacts of make before/break after type, ensuring earth continuity from service to the test position..

11.0 Protection Requirement

11.1 Electrical Protection

Selection of protective scheme will be based mainly on reliability, sensitivity, selectivity. All main protections shall be fast acting type in order to clear the faulty system from the healthy system in earliest possible time to minimize damage to equipment and ensure continuity of power supply.

11.2 Protective scheme requirement

1) Protective relays shall be provided as per the specified protection for each type of feeder . All relays shall conform to the requirements of IS:3231 / IEC-60255 / IEC 61000 or other applicable standards

2) All protective relays shall be of **microprocessor based numerical type** and shall comply to IEC 61850 standard, Edition-2 for communication. Further, the test levels of EMI as indicated in IEC 61850 shall be applicable. The relays shall generate GOOSE

© 2022 MECON Limited All rights reserved

messages as per IEC 61850-9-2 standards for interlocking and also to ensure interoperability with third party relays. Each relay should also generate an ICD file in EXCEL format for engineering/ integration to a vendor independent SCADA/ Automation system.

For protective relays, the scope shall include the following:

a) Necessary software and hardware to up /down load the data to/from the relay from/to the laptop loaded with all necessary software.

b) Incomers, Buscouplers and all outgoing feeders shall be provided with relay having Graphical Display unit.

c) The relays should have front and rear ports for communication e.g. Front network port for local communication for relay settings, modifications, extraction and analysis of fault/event/ disturbance records from a laptop and a Rear fiber optic/ Copper port on IEC61850 standard for remote communication to SAS system.

d) The relays shall have the following tools for fault diagnostics

   1. Fault record: The relay shall have the facility to store fault records with information on cause of trip, date, time, trip values of electrical parameters.
   2. Event record: The relay shall have the facility to store at least 1000 time stamped event records with 1ms resolution.
   3. Disturbance records: At least 30 secs of disturbance records with 12 recording shall be provided in the offered Numerical relays. Each record shall store data from all the analogue channels, at least 10, used in the relay for protection and at least 32 digital channels. The data from DR function shall be available in IEEE format.

e) All relays shall be flush mounted in dust proof cases and shall be mounted on front fascia of control cubical.

f) All protective relays shall be in draw out or plug-in type or with plugin terminals, modular cases with proper testing facilities. Necessary test plugs/test handles shall be supplied loose and shall be included in scope of supply.

g) Complete signals from / to SCADA/Automation shall be routed through numerical relay. Relay shall be selected accordingly so that Number of IO's confirm to this requirement. Scheme shall be suitable for complete remote control & operation of the feeder through relay. For open and close command from SCADA/ Automation through relay shall be routed through aux relay to the trip/ close coil. Direct trip/ close coil switching through BO is not permitted.

h) Number of BI/ BO shall be decided as per the system requirement in line with the above specification however minimum 20 BI & 10 BO shall be considered in all the relays.

i) Protective relays shall have LED indicating lamp to indicate operation of relay and type of fault.

j) Protective relay shall have facility to filter out inrush currents so that lower setting for short circuit protection could be utilized

3) The protective relays shall be suitable for efficient and reliable operation of the protection scheme described in the specification. Necessary auxiliary relays and

© 2022 MECON Limited All rights reserved

timers required for interlocking schemes for multiplying of contacts suiting contact duties of protective relays and monitoring of control supplies and circuits, lockout relay monitoring circuits etc. also required for the complete protection schemes described in the specification shall be provided.

4) Relay ranges, exact type & number of aux. relays, timers shall be finalized during drawing approval stage. Further requirement of aux relays shall be as follows:

a) All timers and Auxiliary relays shall have flag indicators.

b) Each feeder will be provided with master trip relay. Master trip relay shall be hand reset and shall have 2 NO and 2 NC contacts wired to TB in addition to those required by the protection/control scheme.

c) All protective relays and Aux relays shall be provided with at least one extra isolated pair of contacts wired to terminals exclusively for future use.

d) VAA type/ Equivalent aux. relays shall be provided for each transformer fault and each external signal interface except emergency stop PB signal.

e) Various protections/ tripping coming from external source to a feeder shall be connected to master trip relays through aux. relays with flags.

f) For contact multiplication of circuit breaker, only bi-stable aux relays shall be used.

g) Trip circuit supervision shall be provided for each trip coil of the circuit breaker.

5) All AC operated relays shall be suitable for operation at 50 Hz AC. Voltage operated relays shall be suitable as per the provided PT secondary voltage and current operated relays for 1 amp CT secondary unless specified otherwise. All DC operated relays and timers shall be designed to operate satisfactorily between 80% and 110% of rated voltage. Voltage operated relays shall have adequate thermal capacity for continuous operation.

6) Independent timers, where applicable, shall be of solid state type.

7) Contact arrangement, number of poles/ways in control/selector switches shall be finalized during drawing approval stage.

8) Each incomer/ tie feeder shall have provision to receive inter trip from the other end feeder. Each outgoing feeder shall be provision to give inter trip signal to the downstream feeder.

The detailsofprotection requirements shall be as given below for each type of feeder**.** This shall be utilized to finalize the protection requirement during detailed engineering.

Sl No	Type of feeder	Protection
1	Incomer/ Buscoupler/ TIE feeder	• Over-Current and Earth fault Protection (50,51,51N,50N) • Check Sync Protection(25)
2	LinePT/ Bus PT	• HT Fuse • Under and Over Frequencyprotection (81) •Under& Over voltage Protection withtimer (27+59+2) •Fuse failure protection (97) (for alarm) •Neutral unbalance protection (60) (for alarm)

© 2022 MECON Limited All rights reserved

Sl No	Type of feeder	Protection
3	Outgoing Transformer feeder	• Over-Current and Earth fault Protection (50,51,51N,50N) • Sensitive earth fault protection (50G) with CBCT • Flagged aux relays for transformer faults
4	Outgoing Power Feeder	• Over-Current and Earth fault Protection (50,51,51N,50N) • Sensitive earth fault protection (50G) with CBCT
5	Motor Feeder	• Motor Protections ▪ Thermal Overload (49) ▪ Unbalance –asymmetry(46) ▪ Loss of load/ Under power (37) ▪ No of start protection (66) ▪ Stalled protection(51LR) ▪ Under & over voltage protection(27 & 59) ▪ Locked rotter during starting (51S) ▪ Out of step (55) for synchronous motors only. • Sensitive earth fault protection (50G) with CBCT • Motor differential protection (87T), if applicable
6	Capacitor Feeder	• Over-Current and Earth fault Protection (50,51,51N,50N) • Sensitive earth fault protection (50G) with CBCT • Neutral current unbalance protection (60N) for cap • Capacitor restraint feature

12.0 Measuring and Indicating Instruments

1) All indicating instruments shall conform to IS : 1248-2003 and IS - 2419-2012.
2) Shall be capable of withstanding system fault current taking into account CT saturation.
3) Shall be back connected, flushed with control cubical door.
4) Shall have square flush case, non-reflecting type, clearly divided and indelibly marked scales, sharply out lined pointers and zero adjusting device.
5) All analogue meters shall be taut band type having size of 96 sqmm.
6) The minimum scale reading shall not be more than 10%. Maximum reading shall be 150% full load for transformers panel and 600% of full load reading of motor panels. 120% to 600% shall be compressed scale for motor feeders.
7) Each voltmeter shall be calibrated with coil hot.
8) Class of accuracy shall be 1.0 or better for analogue meters and 0.5 for digital meters.

© 2022 MECON Limited All rights reserved

9) Digital multi function meter (MFM) shall be provided for each feeder unless specified otherwise. MFM shall be provided with Modbus RTU communication port for connection to SCADA. The MFM shall be true rms type, have accuracy class of 0.5 for all the parameters. The MFM shall be 3 line 7 segment, 31/2 digit LED display, external powered, site configurable for CT/PT ration, 3 Phase measurements. Display-Current, Voltage, Active & Reactive power, PF, frequency, four quadrant active, reactive and apparent power & energies, THD & Individual voltage & current harmonics indications. MFM shall be suitable for harmonic measurement & display up to 31st harmonic.

10) MFM with Modbus RTU protocol shall be looped with shielded wire for communication. Max 8 devices per loop shall be considered. All looping to be brought to one panel where RS 485 to Ethernet converter shall be installed for external connection to SCADA/ Automation system through Ethernet switch.

The detailsof metering requirement are elaborated below. This shall be utilized to finalize the metering requirement during detailed engineering.

Sl No	Type of feeder	Protection
1	Incomer/ Buscoupler/ TIE feeder	• Ammeter -3 Nos • Multifunction meter • Ammeter for heater-1 no
2	LinePT/ Bus PT	• Voltmeter-3 Nosfor Line PT •Ammeter for heater-1 no
3	Outgoing Transformer feeder	• Ammeter withASS • Multifunction meter • Ammeter for heater-1 no
4	Motor Feeder	• Ammeter withASS • Multifunction meter • Ammeter for heater-1 no
5	Outgoing Power Feeder	• Ammeter withASS • Multifunction meter • Ammeter for heater-1 no

© 2022 MECON Limited All rights reserved

Sl No	Type of feeder	Protection
6	Capacitor Feeder	• Ammeter withASS • Multifunction meter • Ammeter for heater-1 no

13.0 Circuit Breaker

13.1 Electrical Features

1) Type – Gang operated, triple pole, floor rolling truck mounted breaker
2) Arc quenching medium : vacuum
3) Rated operating sequence: O-0.3sec-CO-3Min- CO unless specified otherwise
4) Auxiliary contacts : 6 NO + 6 NC minimum. Continuous Rating- 10A

13.2 Operating Mechanism

1) Spring charged stored energy mechanism to ensure high speed closing and tripping independent of operating forces.
2) Closing spring charged through universal motor with provision for manual charging through handle, insertion of handle to decouple the motor. Motor shall be automatically disconnected when the spring is charged. Spring charging motor shall operate between 85-110% of the specified voltage.
3) Spring charging motor to automatically charge the closing spring for next closing operation when the breaker is closed.
4) Closing and tripping initiated through dc operated coils designed to operate at 85-110% and 70 - 110% of rated control voltage respectively. Additional provision for closing and opening without electric power by mechanical means shall be provided.
5) Trip free feature for all means of closing. Anti pumping feature to be provided
6) Non-reset type operation counter to be provided for each breaker.
7) Mechanical indication shall be provided to show:
   i) Breaker ON & OFF
   ii) Closing spring charged & discharged.
   iii) Service and test position

13.3 Drawout Features

1) Distinct positions viz SERVICE, TEST and ISOLATED. Service & test position shall be inside the panel with VCB door closed.
2) Latching facility for 2 positions inside the panel with door closed
3) Provision to move the breaker from one position to another through a detachable device from outside without opening the door.
4) Power connections - Self-aligning, plug-in type, spring loaded contacts between silver plated copper and silver plated copper.
5) Control connections - plug socket type mechanically coded to prevent wrong insertion; continuous rating 16 A minimum. Provision for locking of control plug to avoid looseness during operation shall be considered.

© 2022 MECON Limited All rights reserved

13.4 Safety Interlocks

1) Breaker cannot be closed in any intermediate position other than the 2 fixed positions within the panel.
2) With the breaker closed, it cannot be moved from any of the position to another.
3) Rack in / out of circuit breaker from test to service position and vice versa shall be allowed only with door closed. Door interlock shall have defeat feature.
4) It shall not be possible to open the circuit breaker enclosure when the breaker is ON or to have access to any part of the draw out assembly which is live when the circuit breaker is in the service position.
5) Unless control connections are engaged
   i) Door cannot be closed
   ii) Breaker cannot be moved to 'Service' or 'Test' position
6) Unless control connections are disengaged, breaker cannot be withdrawn from the panel.
7) Insertion of breaker into 'Service' position not possible if safety shutters are not free.
8) Door can be opened only when breaker is OFF and in 'Test'/ 'Isolated' position
9) Remote closing of breaker not permitted with door open.

13.5 Safety Shutters

1) Spring loaded, positively operated by the travel of the breaker.
2) Locking facility in the closed position.
3) Independent operating mechanism for bus side and cable side shutters.
4) Shall be made of Metallic material.
5) Busbar/ cable marking on safety shutters.

14.0 Current Transformer (CT)

1) Separate cores shall be used for, protection and measurement purposes. CT's on incomer side shall be mounted before incomer breaker and CT's for outgoing feeder shall be put after the breaker.
2) Short time ratings and insulation level of CT's shall be similar to rating of associated breaker. However, time duration for short time rating of CT's upto 100A primary shall be for 1 second.
3) Where outputs and accuracy are not specified, these shall be such as may be required by the circuits in which they are used. Generally the protection CT's and metering CT's shall have 5P20 and 0.5 class respectively, unless otherwise specified.
4) CT's shall be bar primary type, cast resin insulated type. CT may be wound primary type upto 400A primary, after which bar primary type only shall be used.
5) The CT ratios & VA burden shall be finalized during detailed engineering as per the load requirement and burden calculation.
6) Vk calculation, magnetizing curve, ALF and burden calculation for PS class CTs shall be submitted for differential protection application.

© 2022 MECON Limited All rights reserved

7) Core balance CTs (where specified) matching the relay provided for earthfault and sensitive to detect a minimum primary current of 2 Amps.

8) Insulation class of CTs shall be class B.

9) CT nameplate shall be labeled on metering compartment at appropriate location for ease of operation & maintenance.

15.0 Potential Transformers (PT)

1) Shall be of cast resin insulated type mounted on withdrawable floor rolling truck and accessible from front.

2) Bus potential transformer shall be provided for each bus of the switchboard in separate cubicle .

3) Line PT shall be provided in separate cubical or along with the incoming breaker as defined in the technical particular. Rating of line PT's shall be similar to bus PT's

4) High voltage side of PTs shall have fuses. Low voltage star winding side shall have fuses/ MCB and low voltage open delta winding side shall have MCB

5) Low voltage star winding shall have all three phase and neutral connections brought out to terminals and one phase shall be earthed.

6) Insulation levels of PTs shall be similar to rating of associated board.

7) Accuracy class 0.5/3P/3P shall be used unless specified otherwise.

8) VA burden shall be selected based on meters and relays connected with the PT and the same shall be finalized during engineering.

9) Insulation class of PTs shall be class B. The voltage factor of PTs shall be 1.9 for 8 hours irrespective of the type of earthing.

10) PT nameplate shall be labeled on metering compartment at appropriate location for ease of operation & maintenance.

16.0 Fast response current/ voltage/ power transducers, wherever specified

1) Response time shall be maximum 20millisecond

2) Accuracy shall be +/- 0.5%

3) Distortion factor < 0.2%

4) Output shall be 4-20mA

5) Frequency shall be 50 Hz

6) Input shall be 1A for Current and 110V for voltage

7) Transducer shall be suitable for ambient condition inside panel

17.0 Ethernet switch

All Numerical relays shall be prewired for IEC61850 connection and brought to Bus PT panel or any other panel as decided during drawing approval stage. These relay shall be connected to SCADA/ Automation system through these Ethernet switches located in the appropriate panel. Space and mounting arrangement, for mounting of the LIUs shall also be provided in the respective panel.

© 2022 MECON Limited All rights reserved

Industrial grade, Managed Ethernet Switches, IEC 61850 compliant and without cooling fan shall be provided along with the panel. There will be two Ethernet switches for parallel redundant connection. Wiring from relay to switch to be done in double star configuration. Relay to switch on 100MBPS FO or copper port, in line with the type of relay port, with 20% spare ports. 2 Giga ports for external looping for each switch. All the switched in one switchboard shall be identical. Make: Ruggedcom (Siemens)/ Garretcom/ Hirschman.

18.0 Metal Oxide Surge Suppressor

Station class, 10 kA, Surge suppressors shall be provided for all feeders, unless specified otherwise, to limit the switching surges to values recommended by standards. Surge suppressor shall be installed after the CT when placed in the outgoing cable compartment. The voltage rating of the surge suppressor shall be decided during detailed engineering depending upon the earthing system and the standard rating available with the manufacturers of surge arrestors. Detailed calculation shall be submitted by the bidder during drawing approval stage.

19.0 Annunciation Schemes and Annunciators

1) Minimum 6 window annunciator shall be provided for PT panels and 12 window annunciator shall be provided for all other type of feeders
2) Annunciation signaling (as applicable) on individual panels shall be provided:
   i) All transformer warning / signaling conditions
   ii) Trip circuit unhealthy – 1 & 2 as applicable
   iii) All feeder protection faults
   iv) Control supply failure
   v) PT fuse failure / MCB tripping
   vi) Relay internal failure
   vii) Bus-coupler failed to close on auto-changeover
   viii) Any other signal as decided during detailed engineering
3) Annunciator shall be of microprocessor based facia window type, programmable and suitable for NO/NC potential free contacts.
4) Two different audio signals for trip and alarm. DC fail annunciation shall be inbuilt in the Annunciators.
5) Test, accept and reset facilities (with push button) shall be provided for each Annunciator.
6) 20% spare fascias shall be provided subject to minimum 2 windows. Spare annunciation points shall be wired upto terminal blocks.
7) Clustered LED's with high light intensity shall be used in the Annunciator window.
8) All trip signal facia shall have red color and non trip signal white color.
9) The cover plate of facia shall be flush with panel.
10) It shall be capable to receive simultaneous signals.
11) It shall be capable to receive signal during testing mode.
12) It shall be ensured that spurious signals due to influence of external electromagnetic / electrostatic interference on the annunciation wiring and switching disturbances from neighboring circuits within panels does not affect the annunciation system.

© 2022 MECON Limited All rights reserved

Sequence shall be as follows

Description	Visual	Audio
On occurring of fault/ test	Flashing	On
On accepting	Steady on	Off
On reset (fault cleared)	Off	Off
On reset (fault persists)	Steady on	Off

13) Warning and emergency points shall be as per the list approved during detail engineering stage. In general all tripping points and alarm points shall be annunciated.

20.0 Indicating Lamps

1) LED indication lamp shall be provided with low voltage glow protection.

2) LEDs used shall be of the colour of the lamp

Color shall be as follows;

Type of lamp	:	LED Colour
On	:	Red
Off	:	Green
Service	:	Red
Test	:	Green
Trip on fault	:	Amber
Trip ckt. Healthy	:	White
Spring Charged	:	Blue
DC Supply Fail	:	Red
Ready to close	:	Blue
Feeder Earthed/ Bus Earthed		Green
R,Y & B Phase	:	Red, Yellow & Blue

21.0 Control and Selector Switches

1) Control switches for circuit breaker ON/OFF control - 3 position spring return to neutral with lost motion device and pistol grip handle.

2) Other control and selector switches such as local-off-remote, Auto-manual changeover switch, Sync Selector switch, Trip selector switch etc as applicable - stay put type with wing type knobs.

3) Ammeter selector switches - 4 position, make before break type.

4) Voltmeter selector switches - 7 position unless specified otherwise

5) Contact Rating :

Continuous	10 amps

© 2022 MECON Limited All rights reserved

AC 11	4 amps, 240V
DC 11	0.5A, 220V, L/R - 40 ms

22.0 Push Buttons

1) Contact Rating :

Continuous	10 amps
AC 11	4 amps, 240V
DC 11	0.5A, 220V, L/R - 40 ms

2) Colour :

Accept	Blue
Reset	Black
Test	Yellow

23.0 Labels

1) Labels made on non-rusting metal, preferably Anodized Aluminium, with engraved inscription of black letters on white background and shall be riveted.
2) Switchboard designation nameplate at the center of the board with letters not less than 25 mm high.
3) Panel designation number on each panel, both in front and rear. (Min 10mm Height)
4) Inscription plate for each feeder, both in front and rear. (Min 5 mm height)
5) Door front mounted devices to have labels directly below them. (Min 3mm height)
6) Labels for equipment/component inside the cubicle shall be painted at base and sticker on equipment.
7) Label designation and size of lettering subject to approval.
8) Bus side and cable side shutters labeled for identification.

24.0 Surface Treatment

All metal parts of the panel to undergo surface treatment that includes de-rusting, cleaning, chemically degreasing, pickling in acid, cold rinsing, phosphating and passivating followed by powder coating to shade RAL 7035.

25.0 Auto Changeover and Momentary Paralleling Scheme

All the switchboards with sectionalized buses will be normally operated with the bus coupler breakers in open condition.

Auto / Manual / Independent changeover between the two normal incomers and their bus-coupler will be provided with the following features through appropriate selector switch.

25.1 Auto Mode

For prolonged under voltage on any one of the bus sections, the respective incoming breaker will trip and the bus coupler breaker will close provided the other bus section is healthy and

© 2022 MECON Limited All rights reserved

bus coupler is selected for auto changeover. Total changeover time will be adjustable between 1 to 5 seconds. This auto changeover will be blocked if the incoming breaker had tripped on fault. In case bus coupler trips on auto closing, no further closing shall be permitted till the system is reset. Changeover back to the normal source of supply will be affected manually.

25.2 Manual Mode

Manual live changeover facility will be provided for all the switchboard. For planned outage of one of the normal incoming supplies, the respective selected incomer will be tripped automatically after the bus section breaker is closed manually. Also for restoration of normal power supply, the buscoupler will trip after the respective incoming breaker is closed. For this purpose, a trip selector shall be provided for selecting the breaker to be tripped and momentary paralleling shall be done after phase comparison of both the power supplies through check synchronization relay. Thus, depending on the selection made, the selected breaker will be tripped once all the three breakers are closed manually, thus maintaining continuity of supply for the complete switchboard.

A timer with a time delay on pick up of 0.5. - 5 sec will be provided, for annunciation of the running breaker failing to trip within a preset time, (i.e. If the two sources remain paralleled for more than a preset time). Latest breaker tripping provision will be included in the changeover scheme for prolonged paralleling..

25.3 Independent Mode

Provision for manual independent (dead bus) closing of a bus-coupler after an intentional manual trip/ outage due to under voltage of any one incomer will be provided.

26.0 TESTING OF EQUIPMENT

For factory tests, type tests and site tests, SEC-C of GTS to be referred.

27.0 DOCUMENTATION

Following minimum documents along with any other document as may be required during detailed engineering shall be submitted.

27.1 For Approval

1) Guaranteed Technical Particulars
2) Single line diagram indicating all major equipment such as circuit breakers, CT, PT, cable size etc. along with ratings.
3) General Arrangement & front view drawings showing all the equipment and Foundation details

27.2 For Reference

1) Sectional view of the panels.
2) Control and schematic diagram for all the feeders.

© 2022 MECON Limited All rights reserved

3) Panel wise schedule of material indicating type, make and brief tech. Particulars of all items/ accessories mounted on the panels.
4) Surge suppressor sizing calculation
5) Vk calculation, magnetizing curve, ALF and burden calculation of CT & PT.

2.1 HT MOTOR CONTROL CENTRE (HTMCC)

1) HT MCC shall follow the specification of HT switchboard apart from the specific points indicated below. Scope of MCC, voltage level and Feeders to be fed from the HT MCC shall be as specified in the contract technical specification (CTS)
2) HT Motors/ Softstarters/ VFDs/ Converter Transformers/ distribution transformers of one Technological area shall be grouped together and shall be fed from one HTMCC. One HTMCC shall be provided near a Technological area, in case number of HT feeders are 5 or more in that Technological area. In case in one Technological area, number of HT feeders are less than 5, the load may be fed from nearby HT MCC or separate HT MCC shall be provided which shall be decided during BE considering the layout, location, distance, operational and functional requirement etc.
3) The maximum demand of HT MCC shall be calculated as per the procedure given for MCC in Sec-A. The Busbar current rating shall be selected above the MD value from the standard ratings of 1250A, 1600A, 2000A, 2500A or 3150A.
4) Each incomer and its associated cable shall be designed to carry full MD of the HT MCC panel.
5) Required normal current rating for each feeder shall be achieved by single breaker inside the cubicle without fan and considering the necessary derating due to maximum ambient temperature.
6) HT MCC shall be installed in the electrical premises as per the installation guidelines detailed elsewhere in the specification.
7) Each HT MCC shall be provided with two incomers and one bus coupler with auto changeover momentary paralleling and dead bus charging facility. All the feeders shall be provided with VCB
8) All motor feeders shall be provided with interposing CTs/ Transducers for ammeter to be provided on Local Control Box to measure 3-phase motor current.
9) Since, HT motors shall be operated through plant PLC/ Automation system, hardwired/ communication signal exchange shall be provided for each HT motor feeder and PLC/ Automation system.
10) For all the feeders, the indication signal shall exchange on communication bus whereas controls and interlocks shall be hardwired. Necessary connection between HT MCC and PLC-RIO/ Automation system shall be established.

© 2022 MECON Limited All rights reserved

11) All the provisions for necessary signals and interlocks as per the signal exchange diagram given in Sec-A shall be provided.

12) DC Battery bank, Battery Charger and DC distribution boards for auxiliary supplies shall be provided for DC control supply to each HT MCC. These shall be located in the respective electrical premises where HT MCC is located. Battery shall be located in a separate room.

3.0 CABLE IN CABLE OUT (CICO) PANEL FOR VFD TRANSFORMER ISOLATION & CONTROL

1) This panel shall follow the specification of HT Switchboard except the following specific requirement.

2) This shall comprise of two verticals having line PT in incoming cable vertical and VCB in the outgoing cable vertical.

3) Integral manual earth switch shall be provided on the outgoing side.

4) All the provisions for necessary signals and interlocks as per the signal exchange diagram given in Sec-A shall be provided.

5) In case DC control voltage is not available in the substation, battery based power pack having stored energy for 3 close-open operations in a span of one hour and having capacity to feed the control supply of the CICO panel for one hour shall be provided. This power pack shall be fed from UPS.

6) These panels shall be provided with only one Ethernet switch for connection of protective relays to PLC/ Automation system.

4.0 HT VCB AS ISOLATOR PANEL FOR DISTRIBUTION TRANSFORMER ISOLATION

1) This panel shall follow the specification of HT Switchboard without protection,metering, CTs, PTs, Annunciations and without associated requirements for these features.

2) Integral manual earth switch shall be provided on the outgoing side.

3) All the provisions for necessary signals and interlocks as per the signal exchange diagram given in Sec-A shall be provided.

4)

© 2022 MECON Limited All rights reserved

5) The VCB will be motor operated and AC aux supply from UPS shall be given. No DC source shall be used in this panel.

6) The VCB as Isolator shall be single vertical with proper physical segregation between the incoming and outgoing cable.

5.0 BATTERY BANK, BATTERY CHARGER AND DCDB

1.0 General Requirement

For each HT Switchboard/ HT MCC building, separate Battery, Charger and DCDB shall be supplied and located in respective HT Switchboard/HT MCC building.

The nominal voltage rating for the DC system shall be as detailed in Part-I, Sec-A of GS-03

The Battery shall be Ni-Cd or VRLA type as specified in the technical specification(TS). In case nothing has been specified in TS, Ni-Cd battery shall be supplied. Sizing calculation shall be furnished during engineering. Temperature correction factor, 10% spare capacity as design margin and aging factor of 1.25 shall be considered while calculating Ah of the battery for each HT Switchboard/ HTMCC building.

Battery sizing shall be based on 2 Hours backup time for the substation HT Switchboard/ HT MCC load/ Other specified DC loads within substation building and one hour back up for emergency lighting load of respective substation building. Calculations in support of battery capacity selection shall be furnished during engineering as per load cycle in line with IEEE - 485. K factor curve of the battery shall be attached along with the calculation.

AC input power to the DC system shall be given from the nearest emergency bus/ DG bus in the scope of the bidder or from the purchaser, whichever is applicable.

2.0 Mode of Operation

The system shall comprise the following:

i) DC battery bank

ii) Identical dual automatic float-cum-boost chargers

iii) One number DCDB.

Normally one of the chargers shall supply the DC load and also keep the battery under float charge. On failure of supply from charger, the battery shall take over without any interruption. The other charger shall be “ON” and in standby mode.

When the battery requires boost charging, any one charger shall operate on boost charge mode, while the other charger shall supply the DC load on float mode.

The battery’s +ve shall be connected to the boost charger while an intermediate tap shall be connected to the float charger (through a blocking diode) to take over the load in the event of supply failure from charger.

Suitable dropping diode/ diode based voltage divider to give rated DC voltage during trickle

© 2022 MECON Limited All rights reserved

charging condition shall be installed at the out of battery charger. This shall be bypassed during battery feeding the load.

The DC distribution board shall feed the DC power from the charger/ battery to the various consumers as required.

3.0 Battery and Accessories

i) General requirements

a) Battery shall be high discharge duty / heavy duty type.
b) Nominal voltage shall be as indicated in Part-I, Sec-A of GS-03for design of DC system. The number of cells shall be chosen accordingly and calculation for the same shall be submitted during engineering considering specified end cell voltage.
c) Exact model number shall be decided during detailed engineering as per the application, specification & requirement.
d) Battery shall be capable of being recharged from fully exhausted condition within 10 hours upto 90% state of charge. All cells shall be designed for continuous float operation at design float voltage throughout the life.

ii) Nickel Cadmium (Ni-Cd) Batteries

- Each cell shall be rated as:

Sl. No.	Description	Values
1	Nominal voltage	1.2 volts
2	Float charging voltage	1.4 to 1.42 volts
3	Boost charging voltage	1.55 to 1.7 volts
4	Voltage at the end of 5 hours discharge (ECV)	1.1 volts
5	Discharge rate at given ECV	5 Hour (C5)

- Vented type Nickel Cadmium (Ni-Cd) batteries as per IS-10918for indoor stationary installation in hard rubber/ high quality transparent/ translucent plastic contained with top lids and vent plugs shall be provided.

OR

Partial gas recombination low maintenance type Nickel Cadmium (Ni-Cd) batteries as per IEC-62259for indoor stationary installation in hard rubber/ high quality transparent/ translucent plastic contained with top lids and vent plugs shall be provided

© 2022 MECON Limited All rights reserved

iii) **Valve Regulated Lead Acid (VRLA) Batteries**

a) Each cell shall be rated as:

Sl. No.	Description	Values
1	Nominal voltage	2.0 volts
2	Float charging voltage	2.13 to 2.27volts
3	Boost charging voltage	2.28 to 2.32 volts
4	Voltage at the end of 10 hours discharge (ECV)	1.80 volts
5	Discharge rate at given ECV	10 Hour (C10)

b) Valve regulated lead Acid (VRLA) batteries as per IS:15549-2005 for indoor stationary installation having sealed cells in acid resistant container. Each cell shall have a pressure regulating valve which shall be self sealable and flame retardant. This should be capable to withstand internal cell pressure.

4.0 Battery Chargers

i) Battery charger shall be floor mounting type sheet steel enclosed with degree of protection IP42 or better

ii) Two identicalfloat cum boost chargers, each comprising of:
   a) MCCB, line contactor, and overload relay on the ac side.
   b) Isolation transformer with class F insulation, temp rise limited to class B.
   c) 3 phase full wave semi controlled rectifier bridge complete with freewheeling diode. The thyristors and diodes shall have high speed fuses for protection against short circuits. Necessary snubbers for hole storage effect shall also be provided.
   d) Filter circuit at the output.
   e) MCCB on DC side.
   f) Control and protection circuits.

iii) In float mode, the charger operates with a constant voltage controller and the output voltage of the charger shall be maintained within ±1% of the set voltage for ±10% input AC voltage variation or 0-100% load variation or both occurring simultaneously. The output voltage required can be set externally through potentiometers in the range 90-120% steplessly.

iv) In boost mode, the charger shall operate with a constant current controller.

v) Provision of charging with manual control of output voltage shall also be provided.

vi) During boost charging, the charger shall be cut-off as soon as over voltage occurs.

© 2022 MECON Limited All rights reserved

vii) Ripple content in the chargers output voltage shall not exceed 1.0% in float mode and 3% in boost mode.

viii) The charger shall have voltage rating corresponding to the battery and minimum current rating as per design calculation.

ix) Suitable dropping diode/ diode based voltage divider shall be provided to give rated DC output voltage to the load during trickle charging of the battery system. This shall be automatically bypassed during battery feeding the load.

x) Protectionrequirement

a) AC input supply to charger failure.
b) Battery earth fault.
c) Float bus over and under voltage.
d) Boost bus over voltage.
e) Boost over current for each charger circuit.

xi) Indication system

a) AC supply ON (for 3 phases separately) for each charger.
b) DC supply ON, for each charger.
c) Boost/float mode ON, for each charger.

xii) Measurement & Metering

The following measurement shall be provided;

a) AC input voltage and current, of each charger (through voltmeter/ ammeter selector switches).
b) DC output voltage and current, of each charger.
c) Battery charging/drain current.
d) Battery trickle charging current (through amplifier).
e) DC bus voltage (through selector switch).

xiii) **Alarm &**Annunciation

1) Annunciation shall be provided for the following:

a) Failure of AC supply to charger.
b) Battery earth fault.
c) Float bus over/under voltage.
d) Boost bus over voltage.
e) Boost over current for each charger.
f) Failure of thyristor/ diodes for each charger.
g) Failure of blocking diode.
h) Output MCCB open for each charger.
i) Battery room exhaust fan OFF.

2) The power supply for the above annunciations shall be taken from the DC

© 2022 MECON Limited All rights reserved

float bus.

3) A separate annunciation with an AC hooter shall be provided for DC supply failure. This annunciation shall be fed from the AC supply. Reset shall be by a stay put push button.

5.0 DC Distribution Board

i) General Construction

a) The DC distribution board shall have single bus bar arrangement with one incomer.

b) Indicating instruments shall be as per IS1248, accuracy class1.0, 96x96mm size.

c) AC meters shall be taut band type and DC meters shall be moving coil type.

d) DC meters shall be zero centre type where applicable.

ii) Feeder Arrangement

a) Incomer and each outgoing feedershall have MCCB.
b) Incomer shall have DC Ammeter & voltmeter along with indication lamps for ON, OFF & Trip.
c) All outgoing feeders shall have indicating lamps for ON, OFF & Trip.
d) The quantities of outgoing feeders shall be finalized during detailed engineering as per the requirement.
e) 20% spare outgoing feeder shall be provided with min one feeder for each rating.

iii) Construction Features

a) The battery chargers and the DC distribution board (including alarm annunciation) shall be separate boards. Compartmentalized design, Form 3B shall be considered for DCDB.
b) Switch board shall be floor mounting type sheet steel enclosed with degree of protection IP52 or better
c) Sheet steel used shall be CRCA of minimum 2 mm thickness except for doors and covers for which 1.6mm thick cold rolled sheets shall be used.
d) Cable entry shall be from bottom, removable gland plates shall be provided.
e) All components shall be mounted above 450 mm and below1850 mm from the floor level.

© 2022 MECON Limited All rights reserved

iv) Wiring and Terminations

a) All power wiring shall be done through single core, 1100V grade PVC insulated FRLS multi stranded copper wires/ PVC insulated buses.

b) All control wiring shall be done through single core, PVC insulated FRLS multi stranded copper wire of 1.5 sq.mm

c) All connections external to the panel/ switchboard shall be terminated in suitable terminal blocks. Inter panel wiring shall be only through terminal blocks.

d) Each wire shall be identified by printed ferrules corresponding to the schematic diagram.

6.0 TESTS

For factory tests, type tests and site tests, SEC-C of GTS to be referred.

7.0 DOCUMENTATION

Following minimum documents along with any other document as may be required during detailed engineering shall be submitted.

i) For Approval

4) Overall configuration of DC system with operating philosophy
5) Guaranteed Technical Particulars
6) Single line diagrams
7) General Arrangement & front view drawings showing all the equipment.
8) Battery sizing calculation as per IEEE – 485 along with the manufacturer k curve for the battery offered.

ii) For Reference

6) Foundation details
7) Control and schematic diagram
8) Bill of Quantity indicating type, make and brief tech. particulars of all items/ accessories mounted on the panels.

6.0 TRANSFORMERS

6.1 OIL TYPE DISTRIBUTION TRANSFORMER

1.0 TECHNICAL PARTICULAR

This clause will supersede the standard technical specification

This specification is generally based on the following standards :

© 2022 MECON Limited All rights reserved

Sl No	Standard Name	Description
1	IS 1180 – (Part -1) Year 2014,(Reaffirmed 2019)	Outdoor type oil immersed distribution transformer
2	IS-2026, Part 1 to 5	Specification for Power Transformers, as applicable
3	IS 6600 -1972 (Reaffirmed 2001)	Guide for loading of oil immersed transformer
4	IS:335 Year – 1993 (Reaffirmed 2005)	New Insulating Oil – Specification

Latest version of standard applicable shall be followed during engineering.

3.0 Electrical Design

1) Insulation level for primary winding shall be designed as per the following applicable data

Sl. No.	Description	3.3 kV System	6.6 kV System	11 kV System	22 kV System	33 kV System
1.	Nominal system voltage-Primary winding (kV)	3.3	6.6	11	22	33
2.	Max. system voltage (kV)	3.6	7.2	12	24	36
3.	One minute power frequency withstand voltage (kV rms)	10	20	28	50	70
4.	Peak impulse test withstand voltage (kVp)	40	60	75	150	170
5.	Short circuit level considered for winding design (MVA)	225	450	750	1200	1800

2) Transformers shall be capable of delivering rated current at an applied voltage up to 105% rated voltage without exceeding the temperature limits.

3) Overload capacity of the transformer shall be as per IS 6600 - 1972 unless specified otherwise.

4) Transformers shall be capable of delivering rated current at an applied voltage upto 105% rated voltage without exceeding the temperature limits.

© 2022 MECON Limited All rights reserved

5) Shall be operable at its rated capacity at any voltage within ± 10% of rated voltage of the particular tap.

6) Transformers shall be designed to withstand the thermal and dynamic stresses due to short circuits at its terminals or symmetrical/ asymmetrical faults on any winding. Short circuit withstand capacity for the bolted fault at the secondary terminals shall not be less than 2 second duration as specified in IS 2026-Part 5 with respect to fault level specified.

7) The maximum temperature at the end of the specified duration shall not be more than 250°C with the temperature prior to short circuit corresponding to maximum permissible overload.

4.0 Magnetic Circuit:

1) Low loss CRGO silicon steel shall be used

2) CRGO sheets shall be coated with insulation varnish compatible with the sealing liquid.

3) Insulation to withstand annealing temperature as high as 850 degree C and shall reduce the eddy current to minimum.

4) Ducts to be provided to ensure adequate cooling.

5) Core, framework and clamps arranged and tightened to securely hold laminations in order to prevent any displacement in case of heavy shocks during transport, handling or short circuits.

6) Flux density under specified over voltage or frequency shall be within the maximum permissible for the lamination.

7) Transformers shall be designed to withstand 110% over fluxing corresponding to rated voltage.

5.0 Winding

1) Material shall be electrolytic grade work hardened copper.

2) Shall be subjected to shrinkage treatment before drying.

3) Completed core and winding to be vacuum dried in full vacuum and impregnated immediately.

4) Shall be braced to withstand shocks due to rough handling and forces due to short circuit, switching or other transients.

5) Permanent current carrying joints in winding and leads shall be brazed. Connection to bushings and tap changer shall be crimped

© 2022 MECON Limited All rights reserved

6) Coils shall be supported using dried and high-pressure compressed wedge type insulation spacers.

7) Insulating materials shall be compatible with transformer liquid under all service conditions.

8) Leads to the terminals board and bushings shall be rigidly supported.

6.0 Insulation

Inter-turn and inter-coil insulation shall be designed such that di-electric stress is uniformly distributed throughout the windings under all operating conditions.

7.0 Cooling

The transformer shall be naturally cooled. The cooling system provided shall be of the following type:

ONAN- Oil natural, air natural

8.0 Radiator

1) Radiators shall be detachable type directly mounted on the tank. Flanged, gasketted and bolted connections shall be used for connecting the radiators to the tank.

2) The following accessories shall be provided for each radiator/radiator bank

   i) Top and bottom shut off valves and blanking plates.

   ii) Bottom drain plug and top filling plug.

   iii) Lifting lugs

   iv) Air release devices

   v) Provision for earthing

9.0 Off Circuit Tap Switch

1) Externally hand operated with easily accessible links.

2) Designed for sustained over current of at least 150% of the rated current of the winding.

3) Shall not occupy any intermediate position between clearly marked tap positions.

4) Capable of repeated operation and withstanding short circuit forces.

5) Integral handle with pad locking facility at every tap position.

6) Tap position indication for each tap position.

© 2022 MECON Limited All rights reserved

7) Inspection and /or repair shall not require removal of transformer core from tank nor major draining.

10.0 Tank

1) Welded thick gauge plates stiffened and reinforced to withstand without deformation all stresses applied during transport and operation or short circuit conditions.

2) Oil tight welds and joints shall be provided with appropriate gaskets.

3) Fully assembled transformer with its radiators, conservator and other fittings shall withstand for one hour a pressure corresponding to twice the normal head of liquid or to the normal pressure plus 35 kN/sq.m, whichever is lower, measured of the base of the tank.

4) Plates shall be protected internally against corrosion due to insulating liquid.

5) Provided with inspection opening and cover (with handling provision) to provide access to bushing connection for inspection and maintenance of tap changer.

6) Form of cover shall be such as to prevent any stagnant water deposit and to drain gas bubbles towards the Buchholz relay.

10.0 Conservator and Breather

1) Conservator mounted on frame, integral with tank in such a manner that under all conditions and the lowest oil level, the bushings remain under the head of liquid.

2) Conservator volume shall be sufficient to maintain oil level from ambient to oil temperature of 90 deg.C.

3) Oil filling hole with cap and a drain valve to drain the oil completely shall be provided. One end of conservator shall be bolted into position so that it can be removed for cleaning purposes.

4) Silica gel breather in transparent container with oil seal shall be mounted at 1.4 m from ground level and connected to conservator.

5) Minimum quantity of silica gel shall be 1kg for every 3500 litres of oil in transformer (or its part thereof)

6) Prismatic type oil level gauge with maximum and minimum levels marked shall be provided.

7) One no. 150 mm dia dial type magnetic oil level gauge with alarm contact shall also be provided.

© 2022 MECON Limited All rights reserved

8) GA of transformer should be such so that marshalling box & conservator should be at same side. This will facilitate viewing/monitoring of marshalling & conservator oil level together by orienting this side towards door of transformer room.

12.0 Oil

1) The oil shall be as specified in IS:335 and shall be suitably treated, free from moisture and have uniform quality throughout.

2) Oil shall be supplied for the first fill of oil and 10% excess in non-returnable drums

13.0 Pressure release device

1) Pressure release device shall be provided on tank at suitable location. This shall operate at static pressure less than hydraulic test pressure of tank. This should have one potential free contact for alarm/trip and should be wired to Marshalling box.

2) Discharge of Pressure release device shall be taken through pipes away from transformer and prevented from spraying/ splashing on tank.

14.0 Buchholz Relay

1) Double float Buchholz Relay with shut off valves on either sides.

2) Pot cocks at the top and bottom of relay drain plug, inspection window, calibrated scale, terminals box with oil tight double compression type brass gland.

3) Potential free, self reset independent alarm and trip contacts rated to make, break and carry 2 amps at specified control voltage. Contacts are to be wired to the marshalling box.

15.0 Valves and Connections

1) Valves of sluice type with hand wheels (with clear marking for open and close indication)

2) All valves shall be made of gun metal except the radiator valves.

3) Clear indication & marking of open and closed position

4) Provided with blanking plates or screwed plugs

5) Padlocking facility to lock in closed/open position.

6) Sizes of valves shall be as per CBIP guidelines

© 2022 MECON Limited All rights reserved

16.0 TERMINATIONS

1) For Cable termination on HT side

   a) Three insulated terminals housed within a flanged air insulated bolted type cable end box suitable for the type and number of cables specified/ required.

   b) Air insulated disconnection chamber with inspection opening shall be provided.

   c) Shall be provided with earthing terminals for termination of XLPE cable screen and shall be with necessary disconnecting link.

   d) It shall be possible to withdraw the transformer easily after disconnecting from disconnecting link without disturbing the cable terminations. Cable termination box shall be supported from bottom so that after withdrawing the transformer, it remains at its same position.

   e) Removable CRCA gland plated, 3.0 mm thick (Aluminium, 5mm thick wherever applicable for single core cable).

2) For Busduct termination on LT side

   a) Four insulated terminals housed within air insulated chamber with inspection opening and flanged to suit termination of busduct. Flange ends and inspection openings shall be provided with gaskets.

   b) Bushings shall be provided as required to bring neutral point outside for earthing of neutral point. This shall be connected to brass / tinned copper bar and brought to ground level through epoxy insulators.

3) The Clearance in HT & LT termination chamber shall be as per CBIP guidelines.

4) It shall be possible to withdraw the transformer easily after disconnecting the connections without disturbing the busduct/ cable/ bus bars terminations.

17.0 Bushing

1) Porcelain bushing conforming to IS 3347 and IS 2099 shall be provided.

2) Minimum rated current of bushings shall be 1.5 times rated current of the corresponding winding terminal.

3) Clamps and fittings made of steel or malleable iron shall be hot dip galvanized.

4) Bushings rated 400 Amps and above shall have non magnetic clamps and fittings only

5) Neutral bushings shall be provided as required for earthing of neutral point. This shall be connected to brass / tinned copper bar and brought to ground level through epoxy insulators.

© 2022 MECON Limited All rights reserved

18.0 Bushing Current Transformers as mentioned in technical particular

1) CTs shall be removable at site without opening transformer tank cover/active parts.

2) Secondary leads shall be brought to a weatherproof terminal box and from there to the marshalling box with 4 sq.mm copper armoured cable.

19.0 Oil Temperature Indicator

1) Local 150 mm dial type thermometer with manual reset maximum reading pointer. There shall also be two potential free contacts for alarm and trip signals. The alarm and trip settings shall be independently adjustable. The temperature-sensing element mounted in a pocket of oil, shall be connected to the indicator through capillary tubing. Contact rating at 220/110 V DC shall be minimum 2 amps.

2) Temperature indicator dials shall have linear gradations to clearly read at least every 2^0C. Accuracy shall be better than +/- 1.5%

3) For remote Oil temperature indication, two number 4-20 mA isolated signal shall be provided for interface with plant automation system & indication.

20.0 Winding Temperature Indicator

1) Local winding temperature indicator (WTI) for primary and secondary winding, shall have a 150-mm diameter dial type indicator with a manual reset maximum reading pointer. There shall be two potential free contacts for alarm and trip signals. The settings for closing/opening of each contact shall be independently adjustable. Contact rating at DC11, 220/110 V DC shall be minimum 2 amps. The device shall be complete with sensing element, image coil, calibration device, auxiliary CTs etc. as required.

2) Temperature indicator dials shall have linear gradations to clearly read atleast every 2^0C. Accuracy shall be better than +/- 1.5%.

3) For remote Winding temperature indication, two number 4-20 mA isolated signal shall be provided for interface with plant automation system & indication.

21.0 Marshalling Box

1) All outgoing connections from the transformer i.e temperature indicators, CT secondary, fault contacts for annunciation shall be wired to a marshalling box.

© 2022 MECON Limited All rights reserved

2) Made of CRCA sheet steel with min. 2mm thick, degree of protection of enclosure shall be IP55. Removable gland plate at bottom.

3) DP MCBs shall be provided at the AC Aux Power supply incoming & distribution. MB shall have 5-15A, 240V switch with 6 pin socket, space heater with thermostat, protection DP MCB, door switch operated LED illumination lamp.

4) Control wiring within marshalling box shall be done using 1.1KV grade, minimum 1.5sq.mm multistranded FRLS copper wire.

5) Secondary leads of bushing CTs shall be brought to the marshalling box with 4 sq.mm copper armoured cable.

6) Door shall be provided with toughened glass for clear visibility of temperature indicators from outside.

22.0 Earthing

1) All metal parts of the transformer with the exception of individual core laminations, core bolts, and clamping plates shall be maintained at fixed potential by earthing.

2) Two tinned copper earthing terminals with nuts, washers etc. to be provided at diagonally opposite corners suitable to connect 75x12 GI strip.

3) One end of bushing CTs shall be earthed.

23.0 List of Fittings and Accessories.

Following mandatory fittings and accessories shall be provided over and above the requirement as per TS and standards

1) Rating and diagram plates & Valve schedule plate (Stainless Steel)

2) First fill of oil as per IS-335, 1993 with 10% excess in non-returnable drums

3) Oil filling pipes with flange and dummy cover on conservator for filling/ topping up of oil.

4) Oil filter valves at top and bottom of tank

5) Drain off valve/ sludge removal valve at lowest location to allow complete draining

6) Oil sampling valves at top and bottom

7) Pockets for thermometers for oil temperature and winding temperature indicators with 2 spare pockets.

8) Earthing terminals and lugs

© 2022 MECON Limited All rights reserved

9) Inspection covers

10) By-directional flat rollers with locking arrangement

11) Lifting lugs and jacking pads.

12) Haulage holes.

24.0 TESTS

For factory tests, type tests and site tests, SEC-C of GTS to be referred.

25.0 DOCUMENTATION

Following minimum documents along with any other document as may be required during detailed engineering shall be submitted.

25.1 For Approval

1) General Technical Particular (GTP)

2) General arrangement drawing.

3) Rating and diagram plate drawing

4) HV & LV termination arrangement drawings

5) Marshalling box drawing.

25.2 For Reference

1) Foundation plan

2) HV & LV Bushing

3) Design calculation for short circuit and temperature rise

4) Design calculation for flux density with core diagram.

6.2 Oil TYPE CONVERTER TRANSFORMER

The specification for independent Oil Type Converter Transformer shall be similar to the specification for Oil Type Distribution Transformer along with the following additional requirements.

1	Standard:	IEC 61378-1: 1997, Converter transformers, Part 1: Transformers for Industrial Applications,

© 2022 MECON Limited All rights reserved

		IEEE Std, C57.18.10-1998, Standard Practices and Requirements for Semiconductor Power Rectifier Transformers IEEE Std C57.100-1998 Recommended Practice for Establishing Transformer Capability When Supplying Non-sinusoidal Load Currents
2	Transformer Rating	Minimum KVA rating of Transformer shall be 1.7 times the motor name plate rating in KVA to take care of effect of harmonic and other loading factors. Transformer rating shall be chosen from the standard ratings of next higher size as per IS
3	Rated secondary voltage	As per drive manufacturer recommendation
4	No. of Windings	As per drive manufacturer recommendation (Two/ Three/ Multiple secondary)
5	Vector group	As per drive manufacturer recommendation
6	% Impedance on rated KVA	As per drive manufacturer recommendation
7	Neutral Earthing	Floating
8	Location	Transformer shall be located inside a transformer room.
9	Electrostatic shield	Electrostatic Shield between LV and HV winding as well as between LVs (if applicable) shall be provided To eliminate radio frequency interference To prevents electro static transfer of higher voltage surges to convertor To avoid capacitive coupling between high voltage and low voltage
10	Special Features about Mechanical design of Cores & Winding	Harmonic frequencies generated by the frequency converter / thyristor convertor increase the mechanical and di-electrical stresses and therefore the transformers shall be specially designed for this duty The reinforced mechanical bracings of the core and windings shall be specially designed and tested to

© 2022 MECON Limited All rights reserved

		withstand the electro dynamic stresses. Special core joints, distributed gaps and air gaps may be used in the core construction to avoid DC saturation.

6.3. DRY TYPE DISTRIBUTION TRANSFORMER – RESIN CAST

1.0 TECHNICAL PARTICULAR

Sl. No.	Particulars	Parameters
1.	Type	Cast resin encapsulated dry type, three phase, core type with circular concentric windings.
2.	Application/ Duty	As per Sec-A of GTS or CTS
3.	Continuous rating	As per Sec-A of GTS or CTS
4.	Voltage Ratio (HV/LV)	
4.1	Primary voltage	As per Sec-A of GTS or CTS
4.2	Secondary no load voltage	433V
5.	Voltage Variation (HV/LV)	As per Sec-A of GTS
6.	Control Voltage	As per Sec-A of GTS
7.	Aux supply voltage	240V AC
8.	Frequency	50 Hz
9.	Voltage and frequency variation	As per Sec-A of GTS
10.	Conductor	Copper
11.	Insulation class	Class F
12.	Temperature rise at rated output and principal tap at the specified design ambient temperature	
12.1	Winding (by resistance method)	Limited to class B insulation
12.2	Core, other parts adjacent to winding and metallic part	Within safe limit of core and adjacent materials

© 2022 MECON Limited All rights reserved

Sl. No.	Particulars		Parameters
12.3	Enclosure		65°C
13.	Cooling		Air natural (AN)
14.	Degree of Protection		IP23 for indoor application
15.	Winding connection		Delta / Star
16.	Vector group		Dyn 11
17.	Neutral grounding		Solidly earthed
18.	System earthing	HV	As per Sec-A of GTS
		LV	As per Sec-A of GTS
19.	Percentage impedance & Tolerance		As per IS 2026-1, unless specified otherwise
20.	Termination	HV	Cable end box suitable for termination of 1 no. 3C x 240 mm^2 XLPE cable
		LV	Flange throat Suitable for Busduct termination
21.	Bushing mounted CT's		
	LV Neutral bushing CT for standby E/F protection	Ratio	About 50% of the phase current. Shall be finalized during drawing approval stage, secondary 5A
		Class	10P20, 15VA
22.	Tap changer		Manually operated Off Circuit (Bolted link type)
	a) Range		±5%
	b) Total tap positions		5
	c) Taps above nominal voltage		2
	d) Taps below nominal voltage		2
	e) Voltage per step variation		2.5 %
23.	Painting type & Paint shade and paint thickness		Polyester based powder coating, Shade RAL 7035, Minimum paint thickness of 100 microns

© 2022 MECON Limited All rights reserved

Sl. No.	Particulars	Parameters
24.	Flux density at rated voltage and freq	1.5 Tesla (Max)
25.	Magnetizing current	1% of rated current (Max)
26.	Current density	2.5A / sqmm (Max)
27.	Creepage for the epoxy bushings/ insulators	25mm/ kV corresponding to the highest system voltage applicable
28.	Air clearances	As per CBIP manual
29.	Distance between bi-directional rollers	1000 mm
30.	Losses	As given in this chapter.
31.	Type test	One transformer of each lot offered for inspection shall be type tested for impulse, load loss and temperature rise at Govt or third party NABL accredited laboratory

2.0 STANDARDS FOLLOWED

This specification is generally based on the following standards :

Sl No	Standard Name	Description
1	IS-11171 (1985-R2001)	Specification for Dry Type Power Transformers
2	IS-2026, Part 1 to 4	Specification for Power Transformers
3	IEC 60076-11 (2018)	Power Transformers- Part 11 – Dry Type Transformers
4	IEC 60076-12 (2008)	Power Transformers- Part 12 – Loading guide for Dry Type Transformers
5	IEEE C57.12-01 (1988)	Dry type transformer Specification

Latest version of standard applicable shall be followed during engineering.

© 2022 MECON Limited All rights reserved

3.0 ELECTRICAL DESIGN

1) Insulation level for primary winding shall be designed as per the following applicable data

Sl. No.	Description	3.3 kV System	6.6 kV System	11 kV System	22 kV System	33 kV System
1.	Nominal system voltage – Primary winding (kV)	3.3	6.6	11	22	33
2.	Max. system voltage (kV)	3.6	7.2	12	24	36
3.	One minute power frequency withstand voltage (kV rms)	10	20	28	50	70
4.	Peak impulse test withstand voltage (kVp)	40	60	75	150	170
5.	Short circuit level considered for winding design (MVA)	225	450	750	1200	1800

2) Transformers shall be capable of delivering rated current at an applied voltage up to 105% rated voltage without exceeding the temperature limits.

3) Overload capacity of the transformer shall be as per IEC 60076-12 (2008) unless specified otherwise.

4) Shall be operable at its rated capacity at any tap with voltage variation of + 10% of corresponding to voltage of the particular tap.

5) Inter turn and inter coil insulation shall be designed such that dielectric stress is uniformly distributed throughout the windings under all operating conditions.

6) Transformers shall be designed to withstand the thermal and dynamic stresses due to short circuits at its terminals or symmetrical/ asymmetrical faults on any winding. Short circuit withstand capacity for the bolted fault at the secondary terminals shall not be less than 2 second duration as specified in IS 2026-Part 5 with respect to fault level specified.

7) The maximum temperature at the end of the specified duration shall not be more than 250°C with the temperature prior to short circuit corresponding to maximum permissible overload.

8) The transformer should withstand the extreme load variation without any cracking of the casting. For this test certificate of Environmental (E2), Climatic (C2) and Fire behavior (F1), according to IEC 60076-11 shall be furnished.

4.0 MECHANICAL DESIGN

© 2022 MECON Limited All rights reserved

1) Transformer enclosure shall be welded/ bolted CRCA sheet steel construction, free standing, with suitable size of louvers backed with wire mesh. Base shall be suitably reinforced to prevent any distortion during lifting. Base channels shall be provided with bidirectional flat rollers with pulling eyes and lifting hooks to facilitate handling. The minimum thickness of sheet steel enclosure shall be 2.0 mm CRCA.

2) All fasteners and bolts etc. shall be stainless steel. All surfaces to be painted shall be thoroughly cleaned, made free from rust and given two coats of zinc based primer followed by polyester based powder coating.

3) The transformer shall be provided with separate weatherproof HV/LV terminal boxes and disconnecting chamber with links on the side of transformer so as to facilitate withdrawal of transformer without disturbing the HT and LT cables/ busduct connected to transformer.

4) Safety limit switches for each door shall be provided and wired in such a way that the incoming supply may be disconnected when any one side of the enclosure is opened with transformer in energized condition.

5.0 MAGNETIC CIRCUIT

1) Transformer core shall be low loss, non-ageing, high permeability PRIME GRADE CRGO, perfectly insulated and clamped to minimize noise and vibrations.

2) Core, framework and clamps arranged and tightened to securely hold laminations in order to prevent any settling or displacement in case of heavy shocks during transport, handling or short circuits.

3) Flux density under specified over voltage or frequency conditions shall not exceed 1.5 tesla at rated voltage and frequency unless specified otherwise in technical particulars

4) Transformers shall be designed to withstand 110% over-fluxing corresponding to rated voltage. Duration of the over-fluxing shall be as per the CBIP manual.

5) Core material shall be directly procured either from CRGO manufacturer or through their authorized service centre/distributor and not through any contractor. Test certificate for the same shall be submitted at the time of inspection.

6) Bidder shall use hydraulic core lifting facility to avoid any jerk at the time of core building.

6.0 WINDINGS

1) Material shall be electrolytic grade copper.

2) Shall be subjected to shrinkage treatment.

3) Completed high voltage winding to be heated and dried before vacuum casting in resin.

© 2022 MECON Limited All rights reserved

4) Shall be braced to withstand shocks due to rough handling, and forces due to short circuit, switching or other transients.

5) Permanent current carrying joints in winding and leads shall be brazed.

6) Lead busbars to the terminal support insulators shall be rigidly supported.

7) Current density shall be maximum 2.5A/mm^2 unless specified otherwise in technical particulars

7.0 INSULATION

1) Inter turn and inter coil insulation shall be designed such that dielectric stress is uniformly distributed throughout the windings under all operating conditions.

2) The windings shall be provided with insulation class F, having temperature rise in winding limited to that of class B insulation.

8.0 TERMINATIONS

1) For Cable termination on HT side

a) Three insulated terminals housed within a flanged air insulated bolted type cable end box suitable for the type and number of cables specified/ required.

b) Air insulated disconnection chamber with inspection opening shall be provided.

c) Shall be provided with earthing terminals for termination of XLPE cable screen and shall be with necessary disconnecting link.

d) It shall be possible to withdraw the transformer easily after disconnecting from disconnecting link without disturbing the cable terminations. Cable termination box shall be supported from bottom so that after withdrawing the transformer, it remains at its same position.

e) Removable CRCA gland plated, 3.0 mm thick (Aluminium, 5mm thick wherever applicable for single core cable).

2) For Busduct termination on LT side

a) Four insulated terminals housed within Air insulated chamber with inspection opening and flanged to suit termination of busduct. Flange ends and inspection openings shall be provided with gaskets.

b) Neutral bushings shall be provided as required for earthing of neutral point. This shall be connected to brass / tinned copper bar and brought to ground level through epoxy insulators.

3) The Clearance in HT & LT termination chamber shall be as per CBIP guidelines.

© 2022 MECON Limited All rights reserved

4) The HT and LT terminals shall be brought to the terminal point through suitable bushings. This is required to ensure physical segregation of termination point from the active part compartment.

9.0 BUSHINGS & SUPPORT INSULATORS

1) Conforming to IS 2099 for HT and IS 7421 for LT system.

2) Bushing shall be epoxy type, non hygroscopic, homogenous and free from cavities.

3) Minimum rated current of bushings shall be 1.5 times rated current of the corresponding winding terminal.

4) Clamps and fittings made of steel or malleable iron shall be hot dip galvanized or powder coated

5) Neutral bushings shall be provided as required for earthing of neutral point. This shall be connected to brass / tinned copper bar and brought to ground level through epoxy insulators.

10.0 BUSHING CURRENT TRANSFORMERS (WHERE APPLICABLE)

1) CTs for REF protection and back up earth fault shall be provided on the neutral end as per the requirement in technical particular or CTS.

2) For differential protection, CTs shall be provided on primary side and secondary side as per the requirement in technical particular or CTS.

11.0 WINDING TEMPERATURE INDICATOR

1) Local winding temperature indicator (WTI) shall be multi channel (minimum 6 Channel) digital scanner type for measuring temperature of winding. The instrument shall be provided with 4 numbers of change over potential free contacts brought out to separate terminal blocks for winding temperature alarm & trip (2 contacts for each). Contact rating shall be minimum 5 Amps. Two numbers of temperature sensors (RTD) per phase shall be provided at LV side, all wired up to TB. Aux. power supply for the scanner shall be fed using DP MCB.

2) For remote Winding temperature indication, the Scanner shall be provided with two 4-20 mA isolated signal in one phase (preferably Y phase) for interface with plant automation system & indication.

12.0 MARSHALLING BOX

1) All outgoing connections from the transformer i.e temperature indicators, CT secondary, fault contacts for annunciation shall be wired to a marshalling box.

2) Made of CRCA sheet steel with min. 2mm thick, degree of protection of enclosure shall be IP55. Removable gland plate at bottom.

© 2022 MECON Limited All rights reserved

3) DP MCBs shall be provided at the AC Aux Power supply incoming & distribution. MB shall have 5-15A, 240V switch with 6 pin socket, space heater with thermostat, protection DP MCB, door switch operated LED illumination lamp.

4) Control wiring within marshalling box shall be done using 1.1KV grade, minimum 1.5sq.mm multistranded FRLS copper wire.

5) Secondary leads of bushing CTs shall be brought to the marshalling box with 4 sq.mm copper armoured cable.

6) Door shall be provided with toughened glass for clear visibility of digital scanner from outside.

13.0 OFF-CIRCUIT TAP LINK

1) Bolted link type within enclosure, with easy accessibility. Suitable and convenient access door shall be provided.

2) Designed for sustained over current of at least 150% of the rated current of the winding

3) Tap position configuration diagram shall be provided on the access door.

14.0 RATING PLATE

Each transformer shall be provided with a stainless steel rating plate giving the details as per IS:2026 (Part-I). The marking shall be indelible (engraved by itching) and the rating plate shall be located on the front side. Exact value of transformer % impedance, as determined by tests shall be engraved on it.

15.0 EARTHING

1) All metal parts of the transformer with the exception of individual core laminations, core bolts, and clamping plates shall be maintained at fixed potential by earthing.

2) Two tinned copper earthing terminals with nuts, washers etc. to be provided at diagonally opposite corners suitable to connect 75x12 GI strip.

16.0 NOISE

Noise level shall be low and shall be within limit depending on the rating of the transformer as per Table 8 of IEEE C57.12.01-1988.

17.0 TRANSFORMER LOSSES

The transformer losses have not been specified in IS-11171. Accordingly transformer losses as per the prevailing ECBC-2017 is indicated below. In case Indian standard is updated with the loss values at the time of approval of drawing, the same shall be applicable. Alternatively the losses indicated below or the latest ECBC published shall be applicable.

© 2022 MECON Limited All rights reserved

Sl.No.	Dry type transformer Rating kVA	Max. Losses at 50% Loading (kW)	Max. Losses at 100% Loading (kW)	Max. Losses at 50% Loading (kW)	Max. Losses at 100% Loading (kW)
		Up to 22kV class		For 33kV Class	
1.	100	0.94	2.4	1.12	2.4
2.	160	1.29	3.3	1.42	3.3
3.	200	1.5	3.8	1.75	4.0
4.	250	1.7	4.32	1.97	4.6
5.	315	2.0	5.04	2.4	5.4
6.	400	2.38	6.04	2.9	6.8
7.	500	2.8	7.25	3.3	7.8
8.	630	3.34	8.82	3.95	9.2
9.	800	3.88	10.24	4.65	11.4
10.	1000	4.5	12.0	5.3	12.8
11.	1250	5.19	13.87	6.25	14.5
12.	1600	6.32	16.8	7.5	18.0
13.	2000	7.5	20	8.88	21.4
14.	2500	9.25	24.75	10.75	26.5

18.0 LIST OF FITTINGS AND ACCESSORIES

Following mandatory fittings and accessories shall be provided over and above the requirement as per TS and standards

1) Identification plate and Rating & diagram plate (Stainless Steel)

2) Off-circuit tap link along with tap connection plate

3) HV, LV and neutral bushings.

4) Earthing terminals and lugs

5) Inspection doors & cover

6) By-directional flat rollers with locking arrangement

© 2022 MECON Limited All rights reserved

7) Lifting lugs and jacking pads.

8) Haulage holes.

9) Danger plate indicating “Entry prohibited under energized condition"

19.0 TESTS

For factory tests, type tests and site tests, SEC-C of GTS to be referred.

20.0 DOCUMENTATION

Following minimum documents along with any other document as may be required during detailed engineering shall be submitted.

20.1 For Approval

1) General Technical Particular (GTP)

2) General arrangement drawing.

3) Rating and diagram plate drawing

4) HV & LV termination arrangement drawings

5) Marshalling box drawing

20.2 For Reference

1) Foundation plan

2) HV & LV Bushing

3) Design calculation for short circuit and temperature rise

4) Design calculation for flux density with core diagram.

6.4 DRY TYPE CONVERTER TRANSFORMER – RESIN CAST

The specification for independent converter transformer shall be similar to the specification for dry type distribution transformer along with the following additional requirements. This specification shall not be applicable to panel mounted inbuilt converter transformers.

1	Standard:	IEC 61378-1: 1997, Converter transformers, Part 1:

© 2022 MECON Limited All rights reserved

		Transformers for Industrial Applications, IEEE Std, C57.18.10-1998, Standard Practices and Requirements for Semiconductor Power Rectifier Transformers IEEE Std C57.100-1998 Recommended Practice for Establishing Transformer Capability When Supplying Non-sinusoidal Load Currents
2	Transformer Rating	Minimum KVA rating of Transformer shall be 1.7 times the motor name plate rating in KVA. Transformer rating shall be chosen from the standard ratings of next higher size as per IS
3	Rated secondary voltage	As per drive manufacturer recommendation
4	No. of Windings	As per drive manufacturer recommendation (Two/ Three/ Multiple secondary)
5	Vector group	As per drive manufacturer recommendation
6	% Impedance on rated KVA	As per drive manufacturer recommendation
7	Neutral Earthing	Floating
8	Location	For rating >= 630KVA, transformer shall be located inside a separate transformer room. For smaller ratings below 630 KVA, transformers shall be located in Switchgear room or in a separate transformer room as per detail engineering requirement
9	Electrostatic shield	Electrostatic Shield between LV and HV winding as well as between LVs (if applicable) shall be provided To eliminate radio frequency interference To prevents electro static transfer of higher voltage surges to convertor To avoid capacitive coupling between high voltage and low voltage
10	Special Features about Mechanical design of	Harmonic frequencies generated by the frequency converter / thyristor convertor increase the mechanical

© 2022 MECON Limited All rights reserved

	Cores & Winding	and dielectrical stresses and therefore the transformers shall be specially designed for this duty The reinforced mechanical bracings of the core and windings shall be specially designed and tested to withstand the electro dynamic stresses. Special core joints, distributed gaps and air gaps may be used in the core construction to avoid DC saturation.

7.0 LT BUSDUCT

1.0 TECHNICAL PARTICULARS

Sl. No.	Particulars	Parameters
1.	Type of busduct	Non Segregated Phase, 3 Phase& Neutral, Air Insulated, totally enclosed.
2.	Rated operating Voltage	415V or 690V as applicable
3.	Rated insulation voltage	1100V
4.	Rated frequency	50 Hz
5.	Design ambient temperature	As per Section - A
7.	Current Rating	
7.1	Rated continuous current (A) at specified ambient	As per Section - A
7.2	Rated short time withstand current (kA) and duration (Sec)	Same as the switchboard it is connected
7.3	Rated peak withstand current kA (peak)	Same as the switchboard it is connected
8.	Busbar material	Aluminium
9.	Support insulator type	SMC/ DMC/ FRP
10.	Earth bus	Aluminium
11.	Enclosure	

© 2022 MECON Limited All rights reserved

Sl. No.	Particulars	Parameters
11.1	Shape & construction	Rectangular, Welded
11.2	Degree of protection	IP-55 for Outdoor IP-52 for Indoor
11.3	Material of enclosure	Aluminium
11.4	Thickness of enclosure material	3 mm (Min.)
12	Temp rise over design ambient temperature specified	
12.1	Busbars& joints	40 deg. C (Max)
12.2	Enclosure	25 deg. C (Max)
13.	Clearance in air (minimum)	
13.1	Phase to phase (mm	25.4 mm
13.2	Phase to earth (mm)	19.0 mm
14.	Paint shade	
14.1	Inside of Enclosure	Black
14.2	Outside of Enclosure	Matched with the colour of the connected equipment

2.0 Standards followed

List of applicable Standards is given below: -

Sl No	Standard Name	Description
1	IS 8623 : Part 2 : 1993(R2004)	Specification for Low-voltage Switchgear and Controlgear Assemblies - Part 2 : Particular Requirements for Busbar Trunking Systems (Busway)
2	IEC Pub 61439-6 : 2012	Low-voltage switchgear and controlgear assemblies - Part 6: Busbar trunking systems (busways)
3	IS 5082 : 1998	Wrought aluminium and aluminium alloy bars, rods, tubes and sections for electrical purposes
4	IS 5578 : 1984	Guide for marking of insulated conductors
5	IS 11353 : 1985	Guide for Uniform System of Marking and Identification of Conductors and Apparatus Terminals

Latest revision/ version of standard applicable during engineering shall be followed

3.0 General Arrangement

1) Comprising of following sections, as applicable, to make the installation complete and to match with the terminal equipment :
   i) Switchboard termination section with copper flexible link.

© 2022 MECON Limited All rights reserved

ii) Straight section in standard lengths
iii) Matching section (length as per the requirement)
iv) Transformer termination section with copper flexible link.
v) Corner sections (horizontal and vertical)
vi) Phase cross-over section as may be required
vii) Rubber bellow at both termination ends of the busduct.

2) 240V AC space heater with thermostat to be provided at suitable intervals (2-3 mtrs) and wired to external terminal box with heat resistant wire in metallic conduit. Each shipping section will be provided with minimum 1 set of space heater with thermostat.
3) Marshalling box for heater circuit shall be provided with MCBs, TBs & removable gland plate.
4) Silica gel breathers at appropriate locations shall be provided for both indoor and outdoor portions separately.
5) Drain plug shall be provided for both indoor and outdoor portion.

4.0 Construction Details

1) Enclosure construction shall be rectangular welded construction. All the frames and the flanges shall be of aluminium material only. No MS material shall be used
2) Inspection openings shall be provided at regular intervals. Bolted covers with gaskets for easy inspection and maintenance of insulators and bus bar joints shall be provided.
3) Gasketted (Neoprene) connections between adjacent sections of metallic enclosure.
4) Rubber bellows shall be provided at each termination end to take care of vibrations.Rubber bellow shall be of minimum 150 mm height.
5) Outdoor part shall be provided with sloping top
6) Epoxy mouldedSeal-off bushings shall be provided for busducts at junction of Indoor and Outdoor part at the wall location. Where the busduct is passing through wall within indoor position, FRP sealing arrangement shall be provided,
7) Design and supply of painted MS supporting structures with necessary hardware shall be included in the scope of supply.
8) Surface treatment.

   Two coats of epoxy paint, preceded by de-rusting, cleaning chemically, degreasing, pickling in acid, cold rinsing, phosphating, passivating and spraying with two coats of zinc oxide primer. Minimum paint thickness shall be 100 microns

5.0 Busbars and connections

1) Three phase, neutral power busbars made of EC grade aluminium alloy equivalent to grade 63401 or 91E WP as per IS 5082, 1998(R2003), size adequate for specified rated continuous and SC current.
2) Final operating temperature of both bus bars and joints under continuous operation in enclosure limited to value as mentioned in technical particular.

© 2022 MECON Limited All rights reserved

3) Neutral bus shall be provided with rating not less than half the rating of phase bus.

4) Bus bar arrangement shall be as per IS 5082, IS-5578 and IS:11353.

5) Phase identification by paint colour at ends and at each inspection/ maintenance opening.

6) Busbar joints of bolted type, with high tensile steel bolts, nuts and spring washers.

7) Busbar surfaces to be tinned at joints and coated with oxide inhibiting grease prior to jointing.

8) Tinned Copper Flexible connections for termination on equipment at both end.

9) Tinned Copper Flexible Expansion joints on straight runs with joints staggered in adjacent phases. This shall be provided for every 8m of straight run or part thereof.

10) Bimetallic joints for jointing between dissimilar metals, if applicable, shall be provided.

11) Busbar support insulators of non-hygroscopic material, having high impact and di-electric strength, with an anti-tracking contour. The type and material of support insulator shall be as per the short circuit type tested design.

12) Busbars shall be painted black matt finish

6.0 Protective earthing

1) Aluminium earth bus of size 50 x 10 mm running throughout the length of the busduct, positively connected to the body of the busduct.

2) Provision at each end of busduct for terminating external earth conductor.

7.0 TESTS

For factory tests, type tests and site tests, SEC-C of GTS to be referred.

8.0 DOCUMENTATION

Following minimum documents along with any other document as may be required during detailed engineering shall be submitted.

8.1 For Approval

1) General Technical Particular (GTP)

2) General arrangement drawing with detailed dimension, sectional plan

3) Schedule of quality, joints and end termination flexible drawing.

4) End termination diagrams

5) Seal off bushing diagrams

8.2 For Reference

1) Three dimensional view.

2) Erection key diagram

© 2022 MECON Limited All rights reserved

3) Support structure diagram

4) Busbar sizing calculation, Thermal and dynamic withstand calculation during short circuit, for conductor & insulator

5)

8.0 415V SWITCHGEAR (PCC)

Power Control Center-PCC

1.0 TECHNICAL PARTICULARS AND DESIGN PARAMETERS

Sl. No.	PARTICULARS	PCC
1.	Type	Metal Enclosed, Floor Mounting, Free standing, natural air cooled type
2.	Service	Indoor
3.	Enclosure IP	IP4X or better
4.	Standard	
	i) Switchboard/ PCC	IS/ IEC 61439-1 & 2 : 2011
	ii) Circuit Breaker	IS/ IEC 60947-1 & 2 : 2017
	v) Instrument Transformers	IS 16227:2016/ IEC 61869:2012
5.	Nominal system voltage (V)	415 V
6.	Rated insulation level (V)	690V
7.	Power frequency withstand voltage (kV) rms for 1 minute	Power circuit - 2.5 kV Control circuit – 1.5kV
8.	Peak impulse test withstand voltage (kVp)	12 kVp if with ACBs only 8 kVp if with MCCBs also
9.	Form of internal separation	Form 3B
10.	No. of phases and frequency	3ph, 4 wire. 50 Hz
11.	Design Ambient	As per max ambient temp in Sec-A
12.	Design Altitude	As per design altitude in Sec-A
13,	System Earthing	As per standard voltage in Sec-A
14.	Short Circuit Rating (kA rms) & withstand duration	As per short circuit rating in Sec-A
15.	Control & Aux supply	
15.1	Control Voltage	240/110V AC as applicable
15.2	Control & auxiliary supply changeover scheme	Auto with Manual provision

© 2022 MECON Limited All rights reserved

Sl. No.	PARTICULARS	PCC
15.3	Spring charge motor voltage	Same as control voltage
12.4	Aux supply voltage	240V AC
15.	Busbar	
15.1	Bus Color code	RYB
15.2	Busbar Material	Aluminium
15.3	Busbar Rated Current	2000/3200/4000A corresponding to trafo ratings of 1000/1600/2000kVA respectively 5000A corresponding to trafo rating of 2500kVA for crane application
16.	Circuit Breaker	
16.1	Type	Air Circuit Breaker, drawout type
16.2	Operating mechanism – For incomers and outgoing	Motor operated spring charged stored energy drawout type. (EDO)
16.3	No of poles	3 pole/ 4 pole
16.4	Continuous Current Rating (A)	For IC & BC – As per bus rating For outgoing- As per load requirement.
16.5	Short Circuit Rating (kA)	As per short ckt rating in Sec-A
16.6	Rated making Current (kAp)	2.1 times for Short circuit rating upto 50kA 2.2 times for short circuit rating beyond 50kA
16.7	Tripping mechanism	Shunt trip and series trip (release)
16.8	Auxiliary contacts	Minimum 4 NO + 4 NC
17.	Current Transformer	
17.1	CT Ratio	Secondary Current 5A (Primary as per design & load)
17.2	VA Burden	Actual as per the calculation during DE. 50% loading to be considered.
17.3	Accuracy	Class 1.0 for metering
18.	Potential Transformer	
18.1	Configuration	STAR/ STAR/STAR
18.2	Ratio	(415/√3) / (0.11/√3) / (0.11/√3)
18.3	VA Burden	Actual as per the calculation during DE. 50% loading to be considered.

© 2022 MECON Limited All rights reserved

Sl. No.	PARTICULARS	PCC
18.4	Accuracy	0.5/ 3P
19.	Clearance in air	P-P = 25mm P-E = 19mm
20.	Feeder Arrangement	
20.1	Incomer (Mounted in single tier arrangement)	Air circuit breakers
20.2	Outgoings Single Tier > 800A CB Double tier <= 800 A CB	Air circuit breakers / MCCB
21.	Termination requirement	Incomer – Busbuct from top Outgoing - Cable from bottom
22.	Gland plate thickness	For 3 core cable – 3.0mm CRCA For single core cable – 5.0mm AL
23.	Auto changeover scheme with momentary paralleling with microprocessor based under voltage relay, PT, contactors, timers etc.	To be provided
24.	Type tests to be conducted, if any	Type TC for same rating and similar design panel to be submitted.

2.0 General Requirement

1) The PCC shall be of metal clad, self standing, floor mounting, indoor cubicle type, compartmentalized construction, fitted with circuit breakersin fully draw out execution.
2) The PCC and circuit breakers used in the panel shall be fully type tested as per latest applicable IS/ IEC standard.
3) The panel shall be constructed with CRCA sheet steel. Sheet steel thickness shall be minimum 2.0 mm for load bearing members & 1.6 mm for non load bearing members.
4) Integral base frame of 75mm height and painted black shall be provided for each PCC. The base frame shall be made up of ISMC or equivalent thickness sheet steel.
5) **All circuit breaker cassette of same rating shall be identical in all respects and shall be interchangeable with similar breaker panel. However, it shall not be possible to insert circuit breaker of lower current rating into cubicles of higher current rating.**
6) **All circuit breakers in a particular project shall be of same make, model & design expect for the continuous current rating.**
7) **In case any of the incomer of a PCC is fed by DG set power, all the incomer and buscoupler circuit breakers of that PCC shall be of 4 pole. All other breakers shall be of 3 pole.**
8) **All the provisions for necessary signals and interlocks as per the signal exchange diagram given in Sec-A shall be provided.**

© 2022 MECON Limited All rights reserved

3.0 Mechanical Design

1) PCC shall be extensible on both sides. All the outgoing feeders will have uniform depth.
2) Removable lifting arrangement for each transport unit shall be provided.
3) Where more than one cable have to be terminated per unit, the arrangement shall permit connection and disconnection of individual cables separately without disturbing other cables.
4) Double, compression type brass cable glands and crimping type, tinned, heavy duty copper lugs suitable for the type, size and number of cables to be terminated, to be supplied with the PCC for all LT power and control cables
5) Doors shall be provided with padlocking provision
6) Back covers with handles shall be provided in two parts for easy handling.
7) The controls, indicating lamps, relays and meters shall be mounted on the panel in separate control cubical and shall be mounted for uniform appearance.
8) Each PCC cubicle shall have mimic diagram in the front and rear of the panel. This shall be painted. Colour of strip shall be finalized during detailed engineering. Mimic shall be 10mm wide for busbars and 7mm wide for others. Stickers are not acceptable.
9) Continuous earth bus shall be provided throughout the board and shall be brought out of the PCC at both ends for connecting to earth pits.
10) The position of various control switches, push buttons, levers etc requiring manual operation shall be at a height not less than 450mm and shall not exceed 1850 mm from the finished floor level.
11) Each panel shall have 5-15A, 240V switch with 6 pin socket, space heater with thermostat, protection MCB, door switch operated LED illumination lamp.

4.0 Main Bus Bar and Connections

1) Three phase, neutral power busbars made of EC grade aluminium alloy equivalent to grade 63401 or 91E WP as per IS 5082, 1998(R2003), size adequate for specified rated continuous and SC current.
2) Cross-section of horizontal phase and neutral bus shall be uniform throughout the PCC. The neutral busbar shall be rated for at least 50% rating of the main bus bar.
3) The busbars (horizontal as well as vertical) shall be insulated by heat shrinkable, non tracking, low absorption type colour coded PVC sleeve.
4) Temperature rise of bus bars shall not be more than 40 deg. C above the specified design ambient temperature.
5) The continuous current rating of the main horizontal bus shall be same as that of incomer circuit breakers.
6) The vertical bus rating

For incomer	:	Not less than that of horizontal bus
For outgoing	:	Not less than that of the outgoing breaker, irrespective of relay setting or CT ratio.

7) Jumpers in cubicle shall be of same current rating as breaker.

© 2022 MECON Limited All rights reserved

8) Both horizontal and vertical bus bars to be designed and supported to withstand the thermal and dynamic stress corresponding to rated short time and peak withstand current specified.

9) Bus bar joints and tap off connections of bolted type with type of bolts as per the short circuit type tested panel.

10) Busbar supports shall be provided as per the short circuit type tested design. Bus bar support shall be of non-hygroscopic material having high impact and dielectric strength.

5.0 Auxiliary Buses for Control Supply

1) AC supply buses for both control and aux supply shall be provided.

2) These busses shall be electrolytic grade tinned copper busbar with proper tap-off arrangement for each feeder.

6.0 Control & Auxiliary Supply

1) Control & Auxiliary supply buses shall run throughout the switchgear.

2) Two nos. 415/240V control transformers (one in each bus section) of adequate (minimum 1.5kVA) rating with Auto, independent and Manual selector switch shall be provided for reliable control supply in each PCC.

3) MPCB/MCCB shall be provided on incoming sides of control transformer and DP MCB for outgoing side.

4) Two numbers AC incoming feeder for auxiliary supply shall be taken in each PCC controlled by MCB's. Failure of any AC supply shall be monitored & annunciated in the PCC as well as PFC for remote annunciation shall be given.

5) Each feeder panel shall have one DP MCB each for controlling its auxiliary and control supply.

6) Sub circuits shall be protected with DP MCB in each feeder panel for indication circuit, closing circuit, spring charging motor and tripping circuits separately.

7.0 Internal Control Wiring

1) Control wiring shall be carried out by 1100V grade FRLS PVC insulated, single core multi stranded copper wire of minimum cross section 1.5 sq. mm except for power circuit and CT circuits which shall be 2.5 sqmm.

2) Flexible wires protected against mechanical damage for wiring to door mounted devices shall be provided. No bunch of wire shall contain more than 12 wires.

3) Wires identified at each end in accordance with schematic diagrams by printed type ferrules.

4) All connections external to a feeder, all the auxiliary contacts of the breaker shall be brought to terminal blocks.

5) Interconnection between panels of adjacent shipping sections to be brought out to a separate terminal block, wires for interconnection properly labeled, looped and bunched inside the panel for connection at site.

6) Wiring shall not be joined or tied between the terminal points.

7) Not more than two connections shall be provided on any one terminal.

8) All spare contacts shall be wired to TB.

9) All telemetering signals shall be wired to separate set of terminal strips.

© 2022 MECON Limited All rights reserved

8.0 External Terminations

8.1 Control Terminations

1) **800V grade** stud type terminal blocks made of polyamide material (STH4 of connectwell or OAT6 of Elmex or Equivalent), washers, nuts and identification strips shall be provided.

2) All terminals going out of the switch board shall be brought to a separate terminal block marked "External Termination". These will be easily accessible. Terminal blocks in separate groups shall be provided for SCADA/ Automation, remote control panels, transformer marshalling boxes, local push button stations, etc.

3) External terminal block shall be provided with proper truff arrangement for cable dressing. Terminal blocks shall be placed separately for internal looping and external looping.

4) All CT and PT wires shall be first brought to disconnecting type TBs.

5) Overall 20% spare terminals in each feeder shall be provided. The spare terminals shall be distributed appropriately during design stage.

8.2 Power Terminations

1) Suitable for accepting cable/bus trunking as specified/ required.

2) Extension bus links properly spaced for terminating single cables of size 120 sq. mm and above as well as for terminating multiple cables of all sizes.

3) Sufficient space and support arrangement inside each panel to accommodate required size and number of cable runs.

4) Where more than one cable have to be terminated per unit, the arrangement shall permit connection and disconnection of cables separately without disturbing other cables.

9.0 Breaker Handling Truck

1) One breaker handling truck for each PCC, for withdrawing the breakers out of the PCC for maintenance.

2) Height of platform continuously adjustable with locking arrangement at any required level to suit the levels at which the breakers are mounted.

3) Adequate mechanical strength for handling the largest breaker.

4) Guide rails and stops shall be provided for safety.

10.0 Protective Earthing

1) Continuous earth bus of minimum size 50 x 6 mm copper or equivalent aluminium, designed to carry the peak short circuit and short time fault current as specified.

2) Provided at the bottom extending throughout the length of the board, bolted/brazed to the frame work of each panel with an earthing terminal at each end for terminating external earth conductor.

3) Vertical earth bus for earthing individual functional units, as applicable.

4) All non-current carrying metal work (including metallic cases of instruments and other panel mounted components effectively) bonded to the earth bus.

© 2022 MECON Limited All rights reserved

5) Hinged doors earthed through flexible multi-stranded insulated copper wire.

6) Looping of earth connection resulting in loss of earth connection to other devices when the loop is broken not permitted. No looping is allowed for connection of multiple components to earth bus.

7) Withdrawable units provided with self aligning, spring loaded, earth contacts ensuring earth continuity from service to the test position.

11.0 Protection Requirement

11.1 Electrical Protection

Selection of protective scheme will be based mainly on reliability, sensitivity, selectivity. All main protections shall be fast acting type in order to clear the faulty system from the healthy system in earliest possible time to minimize damage to equipment and ensure continuity of power supply.

11.2 Protective scheme requirement

1) Each circuit breaker shall be provided with micro processor based communicable release with LSIG protection as detailed in the speciation of circuit breaker.

2) Release ranges, exact type & number of aux. relays, timers shall be finalized during drawing approval stage. Further requirement of aux relays shall be as follows:

   a) Each incomer and buscoupler will be provided with master trip relay. Master trip relay shall be hand reset and shall have 2 NO and 2 NC contacts wired to TB in addition to those required by the protection/control scheme.

   b) VAA type/ Equivalent aux. relays shall be provided for each transformer fault and each external signal interface except emergency stop PB signal.

   c) Incomer of PCC when fed from transformers shall be provided with CDG 11 relay for standby E/F

   d) For contact multiplication of circuit breaker, only bi-stable aux relays shall be used.

3) Contact arrangement, number of poles/ways in control/selector switches shall be finalized during drawing approval stage.

4) Each incomer/ tie feeder shall have provision to receive inter trip from the other end feeder. Each outgoing feeder shall be provision to give inter trip signal to the downstream feeder.

12.0 Measuring and Indicating Instruments

1) All indicating instruments shall conform to IS : 1248-2003 and IS - 2419-2012.

2) Shall be capable of withstanding system fault current taking into account CT saturation.

3) Shall be back connected, flushed with control cubical door.

4) Shall have square flush case, non-reflecting type, clearly divided and indelibly marked scales, sharply out lined pointers and zero adjusting device.

5) All analogue meters shall be taut band type having size of 96 sqmm.

© 2022 MECON Limited All rights reserved

6) The minimum scale reading shall not be more than 10%. Maximum reading shall be 150% full load for outgoing feeder and 600% of full load reading of motor feeder. 120% to 600% shall be compressed scale for motor feeders.

7) Class of accuracy shall be 1.0 or better for analogue meters and 0.5 for digital meters.

8) Digital multi function meter (MFM) shall be provided for each feeder unless specified otherwise. MFM shall be provided with Modbus RTU communication port for connection to SCADA. The MFM shall be true rms type, have accuracy class of 0.5 for all the parameters. The MFM shall be 3 line 7 segment, 31/2 digit LED display, external powered, site configurable for CT/PT ration, 3 Phase measurements. Display-Current, Voltage, Active & Reactive power, PF, frequency, four quadrant active, reactive and apparent power & energies, THD & Individual voltage & current harmonics indications. MFM shall be suitable for harmonic measurement & display up to 31st harmonic.

9) MFM with Modbus RTU protocol shall be looped with shielded wire for communication. Max 8 devices per loop shall be considered. All looping to be brought to one panel where RS 485 to Ethernet converter shall be installed for external connection to SCADA/ Automation system through Ethernet switch.

The detailsof metering requirement are elaborated below. This shall be utilized to finalize the metering requirement during detailed engineering.

Sl No	Type of feeder	Protection
1	Incomer/ Buscoupler/	• Analog Ammeter with ASS -1 Nos • Analog Voltmeter with VSS-1 Nos • Digital Multifunction meter-1 No,
2	Outgoing feeders	• Analog Ammeter withASS- 1 No • Digital Multifunction meter-1 No,

13.0 Circuit Breaker

13.1 Operating Mechanism

1) Air break, gang operated, motor operated spring charging, trip free mechanism.

2) Spring charged stored energy mechanism to ensure high speed closing and tripping independent of operating forces.

3) Closing spring charged through universal motor with provision for manual charging through handle, insertion of handle to decouple the motor. Motor shall be automatically disconnected when the spring is charged. Spring charging motor shall operate between 85-110% of the specified voltage.

4) Spring charging motor to automatically charge the closing spring for next closing operation when the breaker is closed.

© 2022 MECON Limited All rights reserved

5) Closing and tripping initiated through AC operated coils designed to operate at 85-110% and 70 - 110% of rated control voltage respectively. Additional provision for closing and opening without electric power by mechanical means shall be provided.

6) Trip free feature for all means of closing. Anti pumping feature to be provided

7) Non-reset type operation counter to be provided for each breaker.

8) Mechanically operated close and trip push button (shrouded to prevent accidental operation) acting directly on the trip bar.

9) Mechanical indication shall be provided to show:

   iv) Breaker ON,OFF & TRIP

   v) Closing spring charged & discharged.

   vi) Service and test position

13.2 Drawout Features

1) Distinct fixed positions viz SERVICE, TEST and ISOLATED.

2) Latching facility for the fixed positions inside the panel

3) Provision to move the breaker from one position to another through a detachable device from outside without opening the door.

4) Power connections - Self-aligning, plug-in type. type tested design

13.3 Safety Interlocks

1) Breaker cannot be closed in any intermediate position other than the fixed positions.

2) With the breaker closed, it cannot be moved from any of the position to another.

3) Automatic safety shutters to prevent accidental contact with live parts when the breaker is withdrawn. Insertion of breaker into ‘Service’ position not possible if safety s are not free.

4) Mechanical stopper to prevent accidental falling while withdrawing.

5) Rack in / out of circuit breaker from isolated to test as well as test to service position and vice versa shall be allowed only with door closed. Door interlock shall have defeat feature.

6) It shall not be possible to open the circuit breaker enclosure when the breaker is ON or to have access to any part of the draw out assembly which is live when the circuit breaker is in the service position.

7) Remote closing of breaker not permitted with door open.

13.4 Microprocessor based releases

1) General

   a) The micro processor based release unit shall be interchangeable on site for adaptation to changes in the installation.

   b) Sensors used shall be non-magnetic or of the Rogosky type for accurate current measurements. This will have tapping match the actual load current

   c) The release shall measure the true RMS value of the current.

   d) The release shall have thermal memory to store temperature rise data in the

© 2022 MECON Limited All rights reserved

event of repeated overloads or earth faults. It shall be possible to disable this function if necessary.

e) The display on the release shall be functional even after failure of complete power supply to the power bus. For this, either inbuilt rechargeable cells or external UPS supply shall be used.

2) Protection

The release shall offer the following protection functions as standard. The tripping curve shall be site selectable to achieve total protection discrimination.

a) Long-time (LT) protection with an adjustable current setting and time delay;

b) Short-time (ST) protection with an adjustable pick-up and time delay;

c) Instantaneous (INST) protection with an adjustable pick-up and an OFF position.

d) Earth-fault protection(G) with an adjustable pick-up and time delay shall be provided.

Current and time-delay settings shall be indicated in amperes and seconds respectively on a digital display.Acknowledgement that the setting change should translate to the trip threshold.

3) Communication

The circuit breaker shall be capable of communicating the following data on open protocol through the release:

a) Circuit-breaker status (open/closed, connected/ disconnected/ test, tripped on a fault, ready to close);

b) Release settings;

c) Tripping causes and tripping status data;

d) The measurements processed by the Release - current, voltage, frequency, power etc

e) It shall be possible to remotely control the circuit breaker through the release.

14.0 Current Transformer (CT)

1) CT's shall be nylon encapsulated window type.

2) Short time ratings and insulation level of CT's shall be similar to rating of associated breaker.

3) the metering CT's shall have 1.0 class of accuracy with ISF of <=5, unless otherwise specified.

4) The CT ratios & VA burden shall be finalized during detailed engineering as per the load requirement and burden calculation.

15.0 Potential Transformers (PT)

1) PT shall be of cast resin insulated type having insulation class B.

2) Accuracy class 0.5/3P shall be used unless specified otherwise.

3) VA burden shall be selected based on meters and relays connected with the PT and the same shall be finalized during engineering.

© 2022 MECON Limited All rights reserved

4) PT shall be provided on line side and on bus for implementation of auto change over and momentary paralleling scheme

5) PT shall be protected by MPCB on primary side and MCB on secondary side.

16.0 Annunciation Schemes and Annunciators

1) Minimum 6 window annunciator shall be provided for outgoing feeders and 12 window annunciator shall be provided for all incomers and buscoupler.

2) Annunciation signaling (as applicable) on individual panels shall be provided:
   - i) All transformer warning / signaling conditions
   - ii) All feeder protection faults
   - iii) Control supply failure
   - iv) PT fuse failure / MCB tripping
   - v) Bus-coupler failed to close on auto-changeover
   - vi) Any other signal as decided during detailed engineering

3) Annunciator shall be of microprocessor based facia window type, programmable and suitable for NO/NC potential free contacts.

4) Two different audio signals for trip and alarm.

5) Test, accept and reset facilities (with push button) shall be provided for each Annunciator.

6) 20% spare fascias shall be provided subject to minimum 2 windows. Spare annunciation points shall be wired upto terminal blocks.

7) Clustered LED's with high light intensity shall be used in the Annunciator window.

8) All trip signal facia shall have red color and non trip signal white color.

9) The cover plate of facia shall be flush with panel.

10) It shall be capable to receive simultaneous signals.

11) It shall be capable to receive signal during testing mode.

12) It shall be ensured that spurious signals due to influence of external electromagnetic / electrostatic interference on the annunciation wiring and switching disturbances from neighboring circuits within panels does not affect the annunciation system.

Sequence shall be as follows

Description	Visual	Audio
On occurring of fault/ test	Flashing	On
On accepting	Steady on	Off
On reset (fault cleared)	Off	Off
On reset (fault persists)	Steady on	Off

17.0 Indicating Lamps

1) LED indication lamp shall be provided with Low voltage glow protection.

2) LEDs used shall be of the colour of the lamp

© 2022 MECON Limited All rights reserved

Color shall be as follows;

Type of lamp	**:**	**LED Colour**
On	:	Red
Off	:	Green
Trip on fault	:	Amber
Trip ckt. Healthy	:	White
Spring Charged	:	Blue
R,Y & B Phase	:	Red, Yellow & Blue

18.0 Control and Selector Switches

1) Control switches for circuit breaker ON/OFF control - 3 position spring return to neutral with lost motion device and pistol grip handle.

2) Other control and selector switches such as local-off-remote, Auto-manual changeover switch, Sync Selector switch, Trip selector switch etc as applicable - stay put type with wing type knobs.

3) Ammeter selector switches - 4 position, make before break type.

4) Voltmeter selector switches - 7 position unless specified otherwise

5) Contact Rating :

Continuous	10 amps
AC 11	4 amps, 240V
DC 11	0.5A, 220V, L/R - 40 ms

19.0 Push Buttons

1) Contact Rating :

Continuous	10 amps
AC 11	4 amps, 240V
DC 11	0.5A, 220V, L/R - 40 ms

2) Colour :

Accept	Blue
Reset	Black
Test	Yellow
Emergency Stop Push button (Mushroom head)	RED

20.0 Labels

1) Labels made on non-rusting metal, preferably Anodized Aluminium, with engraved inscription of black letters on white background and shall be riveted.

© 2022 MECON Limited All rights reserved

2) PCC designation nameplate at the center of the board with letters not less than 25 mm high.
3) Panel designation number on each panel, both in front and rear. (Min 10mm Height)
4) Inscription plate for each feeder, both in front and rear. (Min 5 mm height)
5) Door front mounted devices to have labels directly below them. (Min 3mm height)
6) Labels for equipment/component inside the cubicle shall be painted at base and sticker on equipment.
7) Label designation and size of lettering subject to approval.

21.0 Surface Treatment

All metal parts of the panel to undergo surface treatment that includes de-rusting, cleaning, chemically degreasing, pickling in acid, cold rinsing, phosphating and passivating followed by powder coating to shade RAL 7035 unless specified otherwise.

22.0 Auto Changeover and Momentary Paralleling Scheme

All the PCCs with sectionalized buses will be normally operated with the bus coupler breakers in open condition.

Auto / Manual / Independent changeover between the two normal incomers and their bus-coupler will be provided with the following features through appropriate selector switch. Necessary line under voltage and bus under voltage relays, timers etc for the scheme shall provided.

22.1 Auto Mode

For prolonged under voltage on any one of the bus sections, the respective incoming breaker will trip and the bus coupler breaker will close provided the other bus section is healthy and bus coupler is selected for auto changeover. Total changeover time will be adjustable between 1 to 5 seconds. This auto changeover will be blocked if the incoming breaker had tripped on fault. In case bus coupler trips on auto closing, no further closing shall be permitted till the system is reset. Changeover back to the normal source of supply will be affected manually.

22.2 Manual Mode

Manual live changeover facility will be provided for all the PCCs. For planned outage of one of the normal incoming supplies, the respective selected incomer will be tripped automatically after the bus section breaker is closed manually. Also for restoration of normal power supply, the buscoupler will trip after the respective incoming breaker is closed. For this purpose, a trip selector shall be provided for selecting the breaker to be tripped and momentary paralleling shall be done after phase comparison of both the power supplies through check synchronization relay. Thus, depending on the selection made, the selected breaker will be tripped once all the three breakers are closed manually, thus maintaining continuity of supply for the complete PCC.

A timer with a time delay on pick up of 0.5. - 5 sec will be provided, for annunciation of the running breaker failing to trip within a preset time, (i.e. If the two sources remain paralleled for more than a preset time). Latest breaker tripping provision will be included in the changeover scheme for prolonged paralleling.

© 2022 MECON Limited All rights reserved

22.3 Independent Mode

Provision for manual independent (dead bus) closing of a bus-coupler after an intentional manual trip/ outage due to under voltage of any one incomer will be provided.

23.0 TESTS

For factory tests, type tests and site tests, SEC-C of GTS to be referred.

2.24 DOCUMENTATION

Following minimum documents along with any other document as may be required during detailed engineering shall be submitted.

2.24.1 For Approval

1) Guaranteed Technical Particulars
2) Single line diagram indicating all major equipment such as circuit breakers, CT, PT, cable size etc. along with ratings.
3) General Arrangement & front view drawings showing all the equipment & Foundation details

2.24.2 For Reference

1) Control and schematic diagram for all the feeders.
2) Panel wise schedule of material indicating type, make and brief tech. Particulars of all items/ accessories mounted on the panels.
3) Burden calculation of CT & PT

9.0 POWER DISTRIBUTION BOARD (PDB)

- 415V, 3 phase, 4 wire, 50 kA (short time rating for 1 sec.) indoor type.
- Board shall be single front, metal clad, front matched dust and vermin proof, fully compartmentalized and extendible on both sides, IP52 type enclosure.
- Shall have base channel of size ISMC 75.
- Unless specified in TS the PDB shall have two incomers with Bus coupler with castle key interlock.
- Shall have isolated busbar chamber for main busbars at the top, running throughout the length of the board. Chamber shall have removable cover. The board to be extendible on both sides.
- Cable alley (minimum 300mm wide) shall have sufficient space for aluminium power cables and bottom cable chamber shall be left free completely isolated from the vertical busbars. Each vertical panel shall be provided with separate cable alley. Module door & cable alley shall open in opposite directions.

© 2022 MECON Limited All rights reserved

- Busbars shall have same cross section throughout the length. Rating of the neutral busbar shall be 50% of the main busbar. Earth bus bar shall run in bottom chamber throughout the length of the panel.
- Shall have MCCB triple pole, air break type with independent manual quick make and quick break type. MCCB shall be capable of breaking rated current at .3 pf at rated voltage. MCCB shall withstand the fault current envisaged for 415V system.
- Incomers shall have analogue type of Voltmeter & Ammeter with selector switches. All outgoing feeders shall have analogue type Ammeter with selector switches. All feeders shall have ON/OFF/TRIP lamps.
- Incomers of board and outgoing shall be MCCBs. However in case of incomer of 800 Amps or above, ACB shall be used.
- All MCCBs, ACBs, shall be microprocessor based, 50KA for 1 second with LSIG releases. In case, integral earth fault protection is not available with MCCB for earth fault protection, CBCT & relay shall be provided.
- Operating handles of MCCBs shall be interlocked with module door with defeat & padlock facilities. Minimum module height shall be 300mm.
- Each incomer shall be provided with minimum rating of 1000VA, 415V/240V control transformer with auto changer for control power supply for indication lamps etc.
- DP MCBs shall be used in indication circuits.
- Maximum operating height 1800mm and minimum operating height shall be 300mm. 200mm vacant space shall be provided at bottom.
- For General, Constructional features, Busbar details, Wiring, Feeder arrangement etc. Specification given for Main Lighting Distribution Boards Under Clause No. 16 (Illumination) shall be followed.

10.0 MOTORS & FIELD DEVICES

10.1 LOW VOLTAGE SQUIRREL CAGE INDUCTION MOTORS

Sl.No.	Parameters	Description
1.0	**Standard**	IPSS 1-03-001 / IS 12615/ IEC 34 & IEC 72
2.0	**Constructional Features**	
(i)	Frame size & rating	As per IS 1231. However, kW ratings of continuous (S1) duty motors shall be selected from Standards motor ratings as indicated in Appendix-1 (Table-1A)
(ii)	Motor body	Grey iron casting as per IS:210
(iii)	Motor Feet	Integrally cast with the stator
(iv)	Protection for Motor & Bearing	IP – 55 (with canopy for motor if installed outdoor)

© 2022 MECON Limited All rights reserved

(v)	Shaft ends & Extension	Cylindrical as per requirement Proper drilling and tapping shall be provided for mounting of tachos for speed feedback (if required)
(vi)	Bearings	- For motor of rating upto7.5 kW, ball bearings shall be used for both DE & NDE end. - For ratings above 7.5 kW the DE shall be provided with roller bearing and NDE shall be provided with ball bearing. - Bearings shall be suitable for running of motor in either direction. - Motors above 280 frame size shall be provided with grease nipples for in situ greasing.
(vii)	Hazardous Area safety design	As per Hazardous area classification requirement conforming to latest Indian Standard.
(viii)	Greasing point	At DE & NDE sides .
3.0	**Terminal box**	
(i)	Location	RHS viewed from DE / On top
(ii)	Suitability	- 4 Core Al/Cu Cable - Extension shall be done to receive the aluminium cables to avoid cramping of the cables in the terminal box .
(iii)	Rotation	4 X 90 deg.
(iv)	Earthing stud	Inside Terminal Block for termination of 4th core
4.0	**Cooling**	- TEFC (IC-411) - Effective irrespective of direction of rotation
5.0	**Quality of operation**	
(i)	Vibration intensity	Shall be limited as per IS 12075
(ii)	Noise level	As per IS: 12065-1987
(iii)	Balancing	Motors shall be dynamically balanced with full/half key on the shaft- end and fan
6.0	**Electrical design**	
(i)	Power Supply	**As per design Basis clause 1.04 to 1.07**

© 2022 MECON Limited All rights reserved

(ii)	Starting& Rotation	Starting- DOL, Rotation suitability – Bidirectional
(iii)	Min Voltage for Start & Run	85 % of rated voltage at terminal
(iv)	Starting Torque	>= 160 % Rated Torque
(v)	Breakdown or pullout torque	Minimum 200 % of the rated torque
(vi)	Starting current	Shall be as per latest edition of IS 12615.
(vii)	Duty	S1/ as specified in TS/ As perprocess requirement
(viii)	Starts/Hour permissible	3 in quick succession from cold or twoin quick succession from hot start, under rated load condition..
(ix)	Max speed permissible	120% over speed for 2 minutes
(x)	Overload capacity	Capable of withstanding 160% Overload for 15 sec.
(xi)	Efficiency	Shall confirm to IS 12615-2011 or latest edition.
(xii)	Derating	Motor designed at 40 deg.C shall be derated suitably for mentioned ambient temperature .
(xiii)	Motor connections	Motor with frame size 90 shall be connected in star and of frame sizes more than 90 shall be connected in delta For delta connected motors 6 leads shall be brought out .
(xiv)	Insulation	Class F
(xv)	Permissible temperature rise	Limited to class 'B' (120 deg absolute)
(xvi)	Torque Type	Normal / High / High slip type / Stall Torque type (as required for the specific application)
(xvii)	Space Heater	Out door motors above 45 kW Indoor Motors above 110 kW
(xviii)	No. of Poles	4 pole (unless specific drive requirement or economics call for other poles).
(xix)	Testing	As per approved QAP during engineering stage.
(xx)	Mounting	Normally horizontally foot mounting. Other type of mounting as per specific requirement.

© 2022 MECON Limited All rights reserved

(xxi)	Earthing	2 nos. on the body on the opposite side and one inside the TB.

10.2 LOW VOLTAGE SLIP RING INDUCTION MOTORS

Sl.No.	Parameters	Description
1.0	**Standard**	IPSS:1-03-001-92, IPSS 1.03-004-93, IS 325, IEC 34 IEC 72
2.0	**Application**	Use of Slip ring Motors shall be avoided. However, Slip ring motors may be employed under exceptional cases for special application, where use of squirrel cage induction motor is not possible.
3.0	**Constructional Features**	
(i)	Frame size & rating	As per IS 325
(ii)	Motor body	Grey iron casting as per IS:210
(iii)	Motor Feet	Integrally cast with the stator
(iv)	Protection for Motor & Bearing	IP55 degree of protection as per IS : 4691.with canopy for outdoor motors.
(v)	Shaft ends & Extension	- Shall be of high grade steel . - Cylindrical as per requirement. - Proper drilling and tapping shall be provided for mounting of tachos for speed feedback (if required) in non drive end or shaft shall be extended with different diameter and length. - Tapered shafts for all crane drive motors shall be provided. Motors in 225 and above frame size shall have tapered shaft (1:10). - Provision of double shaft extension (cylindrical & taper) to be made (in case of requirement for a particular application).
(vi)	Slip rings	- All motors to have continuously rated slip rings. - Phospher bronze or steel slip rings shall be provided.Cast iron slip- rings shall not be used. - Brush holders shall be in a complete assembly unit. - Slip ring unit shall have a cover with inspection

© 2022 MECON Limited All rights reserved

		window. - For higher range of motors, separate disc is provided between the slipring and rotor windings to prevent carbon dust ingression into windings.
(vii)	Bearings	**same as mentioned for "Low voltage squirrel cage induction motors".**
(viii)	Hazardous Area safety design	As per Hazardous area classification requirement conforming to latest Indian Standard.
(ix)	Greasing point	At DE & NDE sides for online greasing facility without dismantling the motor.
4.0	**Terminal box**	
(i)	Location	**same as mentioned for "Low voltage squirrel cage induction motors".**
(ii)	Suitability	
(iii)	Rotation	
(iv)	Earthing stud	
(v)	Stator and rotor connections	Separate and distinctly marked terminal box to be provided for stator and rotor connections.
(vi)	Protection class	IP 55 in all the cases.
(vii)	Cable glands	Suitable for double compression type cable glands.
5.0	Cooling	**same as mentioned for "Low voltage squirrel cage induction motors".**
6.0	**Quality of operation**	
(i)	Vibration intensity	**same as mentioned for "Low voltage squirrel cage induction motors".**
(ii)	Noise level	
(iii)	Balancing	
7.0	**Electrical design**	
(i)	Power Supply	As per design Basisclause 1.04 to 1.07.
(ii)	Starting	DOL - (Rotation suitablility – Bidirectional)
(iii)	Min Voltage for Start & Run	80 % of rated voltage at terminal.

© 2022 MECON Limited All rights reserved

(iv)	Breakdown or pullout torque	Pull out torque of the intermittent duty motors to be not less than 300% of the rated torque at 40% duty factor.
(vi)	Starting current	<= 600% Rated current.
(vii)	Duty	Duty cycle shall not be less than S4-40%, with a minimum of 150 starts per hour (600 starts / hour for charging cranes and other process cranes).
(viii)	Starts/Hour permissibe	Mechanically and electrically shall be suitable for required number of switching / reversals or starts per hour.
(ix)	Max speed variation	250 % of rated synchronous speed at high accelerating rates and rapid reversals.
(x)	Max speed	250 % of rated speed or 2000 rpm whichever is less.
(xi)	Overload capacity	1.5 times the rated current for 2 minutes.
(xii)	Efficiency	All continuous duty motor (S1-100%) shall be of high efficiency confirming to eff2 class as per IEEMA-19-2000.
(xiv)	Derating	Motor designed at 40 deg.C shall be derated suitably for mentioned ambient temperature.
(xvi)	Insulation	Class FLimited to class 'B' (120 deg absolute).
(xvii)	Torque Type	Normal / High / High slip type / Stall Torque type (as required for the specific application)
(xviii)	Space Heater	Out door motors above 45 kW. Indoor Motor above 110 kW.
(xix)	Over temperature detection and protection.	Slip ring motors for essential drives to be provided withPt 100 resistance thermometers/ thermocouples or thermistors.
(xx)	No. of Poles	4 pole (unless specific drive requirement call for other poles) or more.
(xxi)	Testing	As per approved QAP during engineering stage.
(xxii)	Mounting	Normally horizontally foot mounting. Other type of mounting as per specific requirement.
(xxiii)	Derating	Motors shall be derated considering all the factors - variation in voltage and frequency.

© 2022 MECON Limited All rights reserved

		- Ambient temperature. - Thermal ability due to constant and variable losses of the motor. - Type of load driven.

10.3 ROLLER TABLE MOTORS (TORQUE MOTORS)

1.0	Duty & type	All travel mechanism shall have roller table duty motors .
2.0	Insulation class	Class Finsulation..Temperature rise limited to class B (120 Deg. Absolute) (for DOL starting motor) . For VFD controlled motor Class H insulation temperature rise limited to F to be provided.
3.0	Over speed capability	120% for 2 min as per IEC 60034.
4.0	Cooling	Shall be TENV type only . IC-410
5.0	Temperature sensor	Roller table motor (Torque motor) shall have built in PTC thermistors .
6.0	Locked rotor withstand time	Ability to withstand locked rotor conditions for minimum 1 min. under hot conditions
7.0	Control system	Motor shall be DOL in case speed variation is not required as per process. In case, speed variation is required as per process, then the motors shall be with VFD control & motors shall be suitable for inverter duty.
8.0	Enclosure	IP-55 for general areas. IP-66 for areas with water splashing e.g. de-scaling area / laminar cooling area etc

10.4 HIGH VOLTAGE SQUIRREL CAGE INDUCTION MOTORS

Sl.No.	Parameters	Description
1.0	**Standard**	**IPSS 1-03-018/IS 325**
2.0	**Constructional Features**	
i)	Frame size & rating	As per IS 325

© 2022 MECON Limited All rights reserved

ii)	Stator Frame	Fabricated Steel / High grade cast Iron
iii)	Stator Core	Laminated sheets of high grade low loss silicon steel
iv)	Motor body	Grey iron casting as per IS:210-1978
v)	Casing Feet	Integral with the motor frame
vi)	Body Design	Prevent breakage or other failures due to vibrations normally encountered in heavy industries
vii)	Protection for Motor & Bearing	IP – 55 (with canopy for motor if installed outdoor)as per IS 4691-1985.
viii)	Shaft	Forged Steel shaft
ix)	Bearings (below 5000kW)	Anti-friction bearing with re-greasing facility and with grease quantity controllers
	Bearings (5000kW and above)	Pedestal type sleeve bearing with forced oil lubrication. (arrangement to be provided to prevent lubricating oil from reaching the winding) Lubricating oil temperature and pressure to be measured and monitored.
x)	Vibration monitor	Shall be provided at the DE end of motor bearing for rating 1000kW and above.
xi)	Bearings insulation	Against circulating shaft currents
xii)	Hazardous Area safety design	As per Hazardous area classification requirement conforming to latest Indian Standard
xiii)	Indication of direction of rotation	By Arrow blocks on non-driving end
xiv)	RTD & BTD (PT100 type)	- All motors shall be provided with PT100 type (duplex) 6 nos. or (simplex 12 numbers) stator winding temperature detectors & 2 nos. Bearing (DE & NDE) temperature detectors (duplex) for monitoring alarm and trip conditions. - For HT motor temperature alarm, tripping & monitoring, RTDs (for winding / bearing) shall be wired to Motor protection relay in HTMCC as well as to PLC RIO as automation system inputs. Limit value contacts for alarm and tripping shall be generated in the automation system along with the display of winding and bearing temperature. - Local Dial Gauge to be provided for DE & NDE Bearing temperature indication for Motors rated

© 2022 MECON Limited All rights reserved

		1000kW and above.
xv)	Vibration monitoring	Vibration monitoring (online) shall be provided at the DE end of motor bearing for motors of ratings 1000 kW and above (or as specified in TS) and it should be connected to plant automation system inputs for online monitoring.
3.0	**Terminal box**	
i)	Protection	IP – 55
ii)	Type	Main TB - Phase segregated Neutral TB- Non-Phase Segregated.
iii)	Location	- RHS viewed from DE / On top - 01 number for Main & neutral TB, each on opposite sides of motor. Neutral TB located opposite to main TB
iv)	Winding star point	Winding star point shall be kept outsidei.e.withinin the neutral terminal box.
v)	Suitability	- Termination of XLPE cables with heat shrinkable cable end seals. Special termination kit under exceptional cases may be used with approval from purchaser/consultant. - Each terminal box to have two inlets to accommodate any parallel cables as required.
vi)	Reversible	To suit cable entry from Top / Bottom.
vii)	Earthing stud	Inside Main TB for protective earth conductor termination.
viii)	No. of terminal boxes	Separate TBs for Space heaters, RTDs / BTDs, Vibration monitor etc.
ix)	Fault withstand (Min.)	Rated Short circuit level of the system voltage for 0.25 sec.
4.0	Cooling	TEFC / CACA / CACW. CACW system shall be complete with temperature and pressure monitoring devices.
5.0	**Quality of operation**	
i)	Vibration intensity	Shall be as per IS 12075.

© 2022 MECON Limited All rights reserved

ii)	Noise level	Shall be as per IS: 12065-1987.
iii)	Balancing	Dynamically balanced with full/half key on shaft end and fan.
6.0	**Electrical design**	
i).	Efficiency	High efficiency design of 95% or higher at Full load.
ii)	Starting& Direction of Rotation	Starting- DOL in case of fixed speed application/VFD in case of variable speed application. Direction of Rotation –Bidirectional.
iii)	Min Voltage for Start & Run	85 % of rated voltage at terminal.
iv)	Starting Torque	As specified in application.
v)	Starting current	<= 600% Rated current.
vi)	Duty	S1
vii)	Starts permissible	3 successive start from cold condition OR 2 successive start from hot condition in case of DOL Start. In case of VFD start no limitation for number of starts.
viii)	Starts / hour	3 equally spread in normal Voltage, Frequency & Load in case of DOL Start. In case of VFD start no limitation for number of starts/hour.
ix)	Max speed permissible	120 % rated for 2 minutes.
x)	Differential protection	Required for1000 kW & above. The differential protection matching CT shall be provided & located inside the Neutral TB.
xi)	Insulation	Class F & confirming to IEC 34 - 15/1990.
xii)	Insulation Material	Cast resin rich/Poor.
xiii)	Permissible temperature rise	Limited to class 'B' (120 deg absolute).
xiv)	Space Heater	Required & automatically off during RUN.
xv)	No. of Poles	4. (Motors other than 4 pole to be accepted in exceptional cases with approval from purchaser/consultant where in it is required as per process requirement)
xvi)	Locked rotor current withstand	5 sec longer than starting time under rated load

© 2022 MECON Limited All rights reserved

	time	condition.
xvii)	Surge protection	As specified
xviii)	Operational design	Suitable to VCB / SF6 Breaker in case of DOL.

10.5 SYNCHRONOUS MOTORS

1.0	Standard	IS 4722, IS 7132
2.0	**Constructional Features**	
i)	Frame size & rating	As per IS 325
ii)	Stator Frame	Fabricated Steel / High grade cast Iron.
iii)	Stator Core	Laminated sheets of high grade low loss silicon steel.
iv)	Motor body	Grey iron casting as per IS:210-1978.
v)	Casing Feet	Integral with the motor frame.
vi)	Body Design	Prevent breakage or other failures due to vibrations normally encountered in heavy industries.
vii)	Protection - Motor & Bearing	IP – 55 as per IS 4691-1985.
viii)	Shaft	Forged Steel shaft.
x)	Vibration monitor	Shall be provided at the DE end of motor bearing for rating 1000kW and above.
xi)	Pedestals insulation	Against circulating shaft currents.
xii)	Hazardous Area safety design	As per Hazardous area classification requirement conforming to latest Indian Standard.
xiii)	Indication of direction of rotation	By Arrow blocks on non-driving end.
xiv)	RTD & BTD (PT100 type)	- All motors shall be provided with PT100 type (duplex) 6 nos. or (simplex 12 numbers) stator winding temperature detectors & 2 nos. Bearing (DE & NDE) temperature detectors (duplex) for monitoring alarm and trip conditions. - For HT motor temperature alarm, tripping & monitoring, RTDs (for winding / bearing) shall be wired to Motor protection relay in HTMCC as well

© 2022 MECON Limited All rights reserved

		as to PLC RIO as automation system inputs. Limit value contacts for alarm and tripping shall be generated in the automation system along with the display of winding and bearing temperature. - Local Dial Gauge to be provided for DE & NDE Bearing temperature indication for Motors rated 1000kW and above.
xv)	Vibration monitoring	- Vibration monitoring (online) shall be provided at the DE end of motor bearing for motors of ratings 1000 kW and above and it should be connected to PLC for online monitoring.
3.0	**Terminal box**	
i)	Protection	IP – 55.
ii)	Type	Phase segregated.
iii)	Location	- RHS viewed from DE / On top. - 01 number each on opposite sides of motor in case of Differential Protection (or not) / Neutral TB opposite to main TB.
iv)	Suitability	- Termination of XLPE cables with heat shrinkable cable end seals. Special termination kit under exceptional cases may be used with approval from purchaser/consultant. - Each terminal box to have two inlets to accommodate any parallel cables as required.
v)	Reversible	To suit cable entry from Top / Bottom.
vi)	Earthing stud	Inside TB for protective earth conductor termination.
vii)	No. of terminal boxes	Separate for Space heaters, RTDs/BTDs, Vibration monitor etc
viii)	Fault withstand (Min.)	Rated Short circuit level of the system voltage for 0.25 sec.
4.0	**Cooling**	TEFC / CACA / CACW. CACW system shall be complete with temperature and pressure monitoring devices.
5.0	**Quality of operation**	
i)	Vibration intensity	Shall be as per IS 12075.

© 2022 MECON Limited All rights reserved

ii)	Noise level	Continuous noise level should not exceed 85 db A at a distance of 1.0 m from the motor body as per IS: 12065-1987.
iii)	Balancing	Dynamically balanced with full/half key on shaft end and fan.
2.0	**Electrical design**	
	Excitation system	Brush less excitation system and automatic voltage and power factor regulation.
3.0	Power factor	0.9 or better.
4.0	Motor design	Motors shall be cylindrical/salient pole design.
5.0	Motor winding	Motor stator winding braced for full voltage starting. Squirrel cage type winding with short circuited rotor bars for producing starting torque and accelerating torque to bring the synchronous motor upto the speed. All the three windings stator, rotor and exciter shall be VPI (Vacuum pressure impregnation).
6.0	Bearings (below 5000kW)	Anti-friction bearing with re-greasing facility and with grease quantity controllers.
	Bearings (5000kW and above)	Pedestal type sleeve bearing with forced oil lubrication. (arrangement to be provided to prevent lubricating oil from reaching the winding). Lubricating oil temperature and pressure to be measured and monitored.
7.0	Cooling	All the three modes of cooling arrangement as per requirement; - Open air (for the areas where air is relatively clean e.g water supply pump houses). - Air to water (in closed cooling circuit). - Air to air cooling (ID fan etc.). A shaft mounted fan or a separate fan to be provided for air circulation.
8.0	Excitation method	Brushless excitation system (Integral exciter and rotating rectifier assembly to eliminate the need for brushes and slip rings both on exciter and motor respectively).
9.0	Automatic system power factor correction.	Motor field to have thyristor/IGBT controlled static excitation system for automatic system power factor

© 2022 MECON Limited All rights reserved

		correction.
10.0	Motor synchronism protection	Field monitor relay to be provided for monitoring the power factor of the system which in turn trips the motor and the exciter field off if synchronism is not achieved within a specific length of time or if the motor pulls out of step.
11.0	Insulation class	Class F insulation for field windings as well as for stator with temperature rise limited to 70 deg. C (as measured by resistance method) over an ambient of 50 deg. C.
12.0	Locked rotor withstand time	Motors shall be capable of withstanding locked rotor current for atleast 5 second longer than starting time under rated load condition.

10.6 LT INVERTER DUTY MOTOR

Sl.No.	Parameters	Description
1.0	**Type**	- AC Squirrel cage induction motor. - Inverter Duty.
2.0	Standard	- IPSS 1-03-001/ IS 325 - IEC 60034 -17 - IEC 60034 – 25
3.0	**Constructional Features**	
A	Frame size & rating	- As per IS 325& IS 1231. - Motors required to operate at 10:1 speed range at constant torque may have next frame size.
B	Motor body	Cast iron
C	Motor Feet	Integrally cast with the stator.
D	Protection- Motor & Bearing	IP - 55 (with canopy for motor located outdoor).
E	Motor Shaft	Shall be provided with an external neoprene rubber shaft slinger at the drive end of the motor to provide additional (minimum IP-54) protection from moisture and foreign material.
F	Shaft ends & Extension	- Cylindrical as per requirement. - Shaft shall be extended for encoder / tacho.

© 2022 MECON Limited All rights reserved

		mounting, accordingly suitable hole shall be drilled and tapped.
G	Internal Encoder	- In case of requirements of speed variation of 1000:1 at constant torque the Internal builtin encoder (for speed feedback)is required.
H	Bearing	- Insulated bearing shall be provided at NDE for motors of Motor kW 75 and above. - For loads exerting high cantilever forces at drive ends, roller bearings to be provided for motors of frame size 225 and above in DE. - All motors shall have fully re-greasable, anti-friction bearings. - All motors shall have a charged lubrication system to inhibit moisture condensation. - Standard motors shall have extended grease fittings on the opposite drive-end to facilitate re-lubrication. Grease ports shall be located on the periphery of the motor endshield.
I	Hazardous Area safety design	As per Hazardous area classification requirement conforming to latest Indian Standard.
4.0	**Terminal box**	
A	Location	RHS viewed from DE / On top.
B	Suitability	4 Core Aluminium Cable/ Copper Cable (as selected).
C	Rotation	4 X 90 deg.
D	Earthing stud	Inside Terminal Box.
5.0	**Cooling**	- TEFC, Effective bi-directional. - Motor with 20:1 speed range or higher shall have external fan. - External fan motor shall be 3 phase, 415 V AC.
6.0	**Quality of operation**	
A	Vibration intensity	Shall be limited as per IS 12075-2008.
B	Noise level	As per IS: 12065-1987.
7.0	**Electrical design**	
A	Power Supply	As per design Basis clause 1.04 to 1.07.

© 2022 MECON Limited All rights reserved

B	Starting	Variable Frequency Drive, Bidirectional.
C	Service factor	- 1.0 for VFD power. - 1.15 for sine wave power.
D	Peak transient voltage	3.16 times rated voltage for Motors
E	Minimum rise time	0.1 microsecond
F	Locked Rotor Torque	- 70 to 250% of motor rated torque for applications which requires to start at low starting torque e.g fans, blowers, centrifugal pumps etc. - 200 to 250% of motor rated torque for applications which requires to start on load e.g conveyors , crushers, stirring machines, agitators, reciprocating pumps and compressors etc. - 275% of motor rated torque for applications which requires to start at high torque e.g elevators, cranes, winches, hoists etc.
G	Overload capability	- 150% of the rated current for 2 minutes at rated voltage and rated frequency.
H	Stall time	- Minimum 60 sec for constant torque applications. - Minimum 30 secs for variable torque applications. - Higher stall time as per application requirement).
I	Constant horsepower operation	1.5 times base speed.
J	Duty	Application dependent.
K	Max speed permissible	120 % rated for 2 minutes.
L	Derating due to VFD	As per above mentioned standard.
M	Insulation	- Class H temperature rise limited to F. - Insulation materials with additional phase insulating material, extra end-turn bracing and Class H spike resistant wire.
N	Load Type	Constant Torque / Variable Torque (As per application).
O	Space Heater	- Out door motors above 45 kW. - Indoor Motors above 110 kW.

© 2022 MECON Limited All rights reserved

P	Thermistors	- Shall be provided in the windings. - For motors 45 KW and above, thermistor shall be with 6 PTC @ 2 nos. per phase winding.
8.0	**Operating Characteristics**	
A	Operation with variation in the voltage or the frequency	Motors shall operate successfully under running conditions at rated load with variation in the voltage or the frequency not exceeding the following conditions: +/-10% rated voltage at rated constant V/f ratio except for specific torque boost situations. Motors shall operate successfully under running conditions at rated load and V/f ratio when the voltage unbalance at the motor terminals does not exceed one percent.
B	Operating speed range	- Zero to base speed in case of VT. - 1000: 1 for CT (with blower cooling) - 10:1, 6:1, 4:1 for CT.
9.0	Nameplate	Nameplate shall be of stainless steel with following information; - Machine type - Type of construction, Degree of protection - Rated voltage - Winding connection - Rated Frequency and operating frequency range - Rated current at S1 duty & - Rated current at specified duty - Torque values with speed range and amps - Rated power KW - Service factor - Power factor - Efficiency - Rated speed & Operating speed range - Voltage range - Machine weight - Standards and regulations - Temperature class - Frame size

© 2022 MECON Limited All rights reserved

		- Operating temperature (if different from standard temp) - Bearing details - Encoder PPR (if included) and Voltage rating. -

10.7 DC ELECTROMAGNETIC BRAKE (SHOE TYPE)

1.0	Standard	AISE and Metric
2.0	Voltage	220V DC
3.0	Application	Suitable for arduous steel mill duty having long mechanical life.
4.0	Duty	- Shunt brake for - Continuous duty/Intermittent duty. - Series brake for - One hour duty (mill duty)/Half hour duty (crane duty).
5.0	Mounting	Floor mounting, two shoes, self-aligning, quick acting with self-lubricating robust bearings.
6.0	Brake shoe lining	Lining of tough heat resistant material with countersunk fixing rivets to prevent rubbing against the brake wheel.
7.0	Shoe adjustment and indications	- Facility for brake torque adjustment. - Lining wear indication.
8.0	Coil	Insulation : Class F
9.0	Braking Torque rating	Minimum 150% of the motor FLT.
10.0	Temperature limit for brake magnet and brake drum	- Brake magnet :The magnet shall not become heated, during operation, to a temperature exceeding 150 deg. C. - Brake drum :The temperature of the drum during working of the brake shall not exceed 200 deg. C.
11.0	Limit switch	Limit switches to be provided for contact feedback used for interlocking, indications etc.
12.0	Safety for fail safe operation	- Electrically released and spring applied for fail safe operation (gravity operated counterweight type are not acceptable). - Manual / hand release shall be provided in case of power failure or other failure in the system.

© 2022 MECON Limited All rights reserved

13.0	Maintainability of brake coil	Brake coil connection brought to appropriate terminal box for ease in maintenance and terminals covered for protection against accidental touch.
14.0	Residual magnetic gap adjustment	To increase the residual magnetic gap for reducing brake application time anti magnetic shim shall be provided.
15.0	Brake control panel	Necessary rectifier and brake forcing equipment shall be included for DC electro-magnet brakes used with AC system. The brake rectifier panel shall house MPCB & indication lamps for incoming power supply, suitable rated rectifier, 220V DC DP MCBs at rectifier output, suitable rated resistors, power contactors, timers, terminals etc. as per control requirement.

10.8 FIELD SWITCHES

1.0	Type	All Limit switches to be 2 wire, Universal, Proximity type, suitable for 24 to 250V AC/DC. Use of lever operated limit switches to be done where use of proximity switches are not possible/preferrable. Heavy duty, lever/cam operated limit switches to be used for moving machines/cranes/hoists etc.
2.0	Enclosure protection	All field switches to have enclosure class IP-65.
3.0	Contacts	Minimum 2NO + 2NC contacts for interlocks wiredTB/JB for lever operated. For Cam operated at least 1 cam shall left as spare.

10.9 POWER RESISTANCE

1.0	Resistor design	To meet arduous heavy duty industrial and steel works application, unbreakable, rigid, resilient & rust less.
2.0	Material	Grid punched from chromium steel alloy with temperature coefficient 0.016% deg. C normal permissible continuous operating temperature of over 500 degree C.
3.0	Duty rating	10 minutes rating of BS: 587 and conforming to IPSS No. 1- 10-002-82 and addendum No 1 to IPSS (March 1985).
4.0	Construction	Every turn of every grid is fully supported so that adjacent turns and adjacent grids can neither vibrate nor distort so as to make mutual contact. The complete grid is spot welded to its neighbors thus eliminating slacken support due to heating and cooling

© 2022 MECON Limited All rights reserved

		and is mounted on mica insulated high tensile steel tie-rod and mica creepage washers. A tripping point is formed on each grid by a hole in the welded portion which is double thickness and absolutely flat. All grids shall have either zinc alloyed or cadmium plated surface for permanent weather proofing. Highest quality mica and porcelain insulated terminals are to be used throughout. The thermal loading of the resistance box should be uniform.
5.0	Painting	All metal works for the housing shall be degreased, derusted and passivated before applying two coats of stove enamel.
6.0	Terminals	The terminals shall be easily accessible at the lower most stack.
7.0	Enclosure class	IP-30 for outdoor application and IP-11 for indoor application.
8.0	Testing	Testing shall be carried in accordance to BS: 587.
9.0	Power resistors for crane control	Shall be of Fechral edge wound resistance boxes. The element designshall be either circular (Russian design) or elliptical (BHEL design). Punched grid resistance boxes shall not be used for crane control.

11.0 INDIVIDUAL DRIVE CONTROL LEVEL

11.1 VARIABLE FREQUENCY DRIVE (VFD)

Resistance boxes shall be floor mounted and shall be preferrably placed on the floor near the respective MCC/VFD Drive.

1.0	Basic design particulars	- Digital control technology with flux vector control/Direct torque drive (with / without PG as per requirement). - IGBT based with sine coded PWM control. - VFD shall communicate to basic automation system on system communication bus.

© 2022 MECON Limited All rights reserved

		- Suitable for variable torque or constant torque applications. Harmonic control shall be as defined by IEEE 519-1992. - VFD shall be provided with dynamic braking system to avoid DC bus overvoltage during sudden stoppages unless the application is of very low inertia
2.0	Reference Standards	- IEC 146 - IEC 61800- 2, IEC 61800- 3, IEC 61800- 5 - IEC 61508
3.0	Drive controller technology	- Full closed loop flux vector control shall be available for constant torque applications. - Operating the drive with motor disconnected. - Suitable for use on both Constant Torqueor Variable Torque. - Multiple programmable stop modes including - Ramp, Coast, DC-Brake, Ramp-to-Hold and S-curve. - Multiple acceleration and deceleration rates.
4.0	Type of connection	- Three full wave diode/IGBT rectifiers supplied by phase shifted, three phase AC/IGBT/IGCT to provide a fixed DC voltage. - DC bus inductor on all ratings - DC link capacitors - Insulated Gate Bipolar Transistor (IGBT) power section, shall be rated for variable / constant torque applications. The power section shall use vector dispersal pulsewidth modulated (PWM) IGBT gate control algorithm and soft switching IGBT's to reduce motor terminal dv/dt and allow longer cable length from drive to motor without output filters. - Common control connection for all ratings.
5.0	Overload capacity	- 150% of the rated current for 1 minute overload for constant torque applications .
6.0	Efficiency	More than 97% or better at full speed and full load.
7.0	Input power supply	- As per design basis clause 1.04 to 1.07
8.0	Voltage variation	- Voltage variation of (+/-) 0.1 % with an input variation as per design basis clause 1.06. - Steady state regulation of (+/-) 0.25% guaranteed

© 2022 MECON Limited All rights reserved

		against 100 to 200 % load disturbance and input supply frequency variation as per design basis clause 1.06. - The drive should be designed to operate on an AC supply, which may contain line notching, and up to 10% harmonic distortion.
9	**Environmental Conditions**	
9.1	Storage ambient temperature range	Upto to 70º C.
9.2	Enclosure class Operating ambient temperature range	- IP42 & above - 0º C to 50º C
9.3	Relative humidity	Upto97% non-condensing.
9.4	Operating elevation	Up to 1000 Meters (3,300ft) without derating.
9.5	Shock	As per IEC 61800
9.6	Vibrations	As per IEC 61800
10	**Reference**	
10.1	Input reference voltage	0 +/- 10 V DC / 0 – 10 V DC / 4 – 20 mA .
10.2	Reference signals	The drive should be capable of the following speed reference signals • Digital MOP • Jog • HMI (Program/Control panel) • Analog Input signals • Preset Speeds • Communication module commands
10.3	Loss of reference	The drive should be capable of sensing the reference loss conditions . In the event of loss of an analog input reference signal, the drive should be user programmable to the following • Fault the drive • Alarm and maintain last reference • Alarm and go to preset speed • Alarm and go to minimum speed

© 2022 MECON Limited All rights reserved

		• Alarm and go to maximum speed • Alarm and maintain last output frequency Signal loss detection should be available regardless of the function of the analog input.
11	**Output**	
11.1	Output voltage	From 0 to rated motor voltage.
11.2	Output frequency	0.5 - 400 Hz.
11.3	Output Waveform	The inverter section should produce a pulse width modulated (PWM) waveform using latest generation IGBT/IGCTs.
11.4	Output frequency resolution	0.01 Hz.
12.0	Reflected wave	Maximum of 2.25 times the bus voltage or 1600V, whichever is less, up to cable lengths of 200 metres.
13.0	Starting torque	150 % / 1 Hz. (without PG) 150 % / 0 RPM (with PG)
14.0	Torque accuracy	+ / - 5 %.
15.0	Speed control accuracy	+ / - 0.02 %, 0.1% without encoder. IR compensation to be provided for drive without PG.
16.0	Ramp rate	- Linear acceleration and deceleration adjustable independently from 0 to 3600 seconds. - Provision of remotely selectable Accel / Decel settings should be accessible through digital inputs also.
17.0	Main power components in incoming AC side	- ACB / MCCB with 50 KA rating. ACB to be considered in case rating is more than 630A. MCCB to be considered in case rating is 630A or less. - Matching input isolation transformer/ line reactor for harmonic and noise suppression. For input isolation transformer, the K factor shall be 4.0 or less. - AC line surge suppression network. - Input contactor.
18.0	Converter –Inverter Equipment	- Diode / IGBT bridge for AC/DC. - DC link circuit with reactor/capacitor. - IGBT bridge for Inverter for DC/AC.

© 2022 MECON Limited All rights reserved

		- Input isolation transformer / line reactor. - Input harmonic filter. - Main PLC to take care of interlocking and sequencing etc.
19.0	Load side components	- Filter network (du/dt filter or sine filter or Line reactor based on the requirement). - Over-load relay for each motor (in case of group drive). - Line contactors in input &output side (as per application requirement. - Output reactor / terminator (if required).
20.0	Terminal blocks	- Separate for control and power wiring. - Power terminal blocks marked for both inputs and outputs . - Ferrule numbers of control wires shall be same as TB numbers - 20% spare terminals shall be provided
21.0	By-pass Arrangement	DOL By-pass arrangement with selector switchshall be provided for drives of 415 V motors where normal operation is possible on rated frequency of 50 Hz or speed control is not a process requirement.
22.0	Input / Outputs	- **Hard-Wired I/O** Hardwired I/O should be provided via separate I/O cards - **Standard I/O Card** The "Standard I/O board should consist of both digital and analog I/O. It should be available in two versions; one for 115/240 VAC digital I/O and one for 24V AC/DC digital I/O. - **Analog I/O** • Differentially isolated ±10V (bi-polar) / 4-20Ma analog inputs . - **Digital Outputs** • Relay outputs – Minimum 02 nos. • Contact output ratings should be 240V AC / 24V DC,Maximum 2.0 Amp
23.0	Protective features	- AC line surge suppression network and over voltage protection.

© 2022 MECON Limited All rights reserved

		- Under voltage in supply network. - Phase sequence protection and monitoring. - Under voltage in DC bus. - Over voltage in DC bus. - Over speed protection in the event that the output frequency exceeds the maximum reference by a specified amount. - Over load - Earth fault - Instantaneous over current - Transformer fault ,If applicable - Cooling fan failure - Stall monitor for motor alarms - Controlled shut down, when properly fused, with no component failure in the event of an output phase to phase or phase to ground short circuit and annunciation of the fault condition.
24.0	Annunciations	All type of faults shall be annunciated in Control Panel of the drive which shall be provided and mounted on Panel front door. The faults listed below shall be displayed as far possible. - AC line surge suppression network and overvoltage protection . - Under voltage in supply network - Phase sequence protection and monitoring - Under voltage in DC bus - Over voltage in DC bus - Over speed monitor - Over load - Earth fault - Instantaneous over current - Transformer fault ,If applicable - Cooling fan failure – Stall monitor for motor alarms - Motor fault (winding / bearing temperature, vibration) as applicable - Loss of frequency command - Shall be able to store at least 16 previous faults in

© 2022 MECON Limited All rights reserved

		memory on FIFO sequence .
25.0	Meters	- Input Volt meter with selector switches shall be provided and mounted on Panel door. Separate meters with SS shall be provided for following incase it is not available with control panel of VFD - Input current - Output voltage & Current - Output frequency (digital display) - KW meter for drive ratings above 200 KW.
26	**Other features**	
26.1	Bus Regulation	DC Bus regulation should be available to reduce the possibility of drive overvoltage trips due to regenerative conditions.
26.2	Current Limit	Programmable current limit from 1 amps to 150% of drive rated amps. Current limit to be active for all drive states; accelerating, constant speed and decelerating.
26.3	Dynamic Braking	The drive shall have an internal, built in 7th IGBT for use as a dynamic braking chopper. This IGBT shall have enough capacity to handle greater than or equal to 100% regeneration power from the output, continuously. The drive shall also have a “drive mounted” dynamic braking resistor for low level braking applications and interactive software to protect the “internally” mounted resistor from abuse.
27.0	Selector switches	Numbers of selector switches shall be provided as per control requirement during design stage considering control philosophy. All the selector switches shall be of 10 A rating .
28.0	Pushbuttons	- Trip reset . - Start if required as per control philosophy - Emergency stop.
29.0	Lamps	Following minimum indication lamps shall be provided - R, Y, B phase power ON - Drive ready. - Drive trip . - Drive/Motor Run, OFF. - Control supply ON .

© 2022 MECON Limited All rights reserved

		All the lamps shall be of cluster LED type
30.0	Regulation & control facilities	- Reference speed setter - Ramp generator - Speed feed back - Current feed back - Trigger module - Pulse transformers - Logic control module - Sequence module - PID control - Zero speed/ over speed monitor as applicable. - Momentary power loss restart. - Auto tuning. - Current limiter. - Skip Frequency. - Counter current/ regenerative braking unit as applicable. - Active electronic components used shall be of industrial grade hermetically sealed. - Output signals for fault alarm, frequency arrival, running signal.
31.0	Communication Bus	ModBus/ProfiBus-DP/DeviceNet/Ethernet/ Profinet
32.0	Operator panel	Shall be mounted on the front door of the unit. - All adjustments to be made with the door closed. - Status and Power LEDs viewable through the cover.
33.0	Membrane keypad	- The keypad shall be logically designed for two operating areas with required number of keys. - Local operator control like - local start /stop, - jog forward / reverse. - Programming.
34.0	LCD display	- Display shall be black lighted, enabling viewing in extremes of lighting conditions - Display shall be in alphanumeric (in English only)

© 2022 MECON Limited All rights reserved

		- All the faults stored in memory shall be displayed by scrolling .
35.0	Construction features	- Floor mounted, free standing - Dust and vermin proof - Sheet steel clad - Minimum 2.0 mm thick for panels. - Minimum 2.0 mm thick for doors and side covers. - Suitable to withstand vibrations to be encountered in steel plant application. - Cubicles with illumination lamps, door switches, space heaters and adequate sockets for soldering. - All control blocks plug–in-type with necessary test sockets. - Units shall be self contained and serviceable.
36.0	Ventilation	- Units shall be provided with cooling fans and louvers at the bottom sides. All louvers shall have fine mesh behind them. - Ventilation through individual ventilation ducts from bottom not acceptable.

11.2 AC LINE REACTOR

1.0	No.of phases	03
2.0	Input power supply	As per design basis clause 1.04 to 1.07
3.0	Duty class	T2 as per IEEE-1973
4.0	Overload	125% for 2 hours 200% for 10 seconds
5.0	Standard	IS: 5553 (Part-2)
6.0	Insulation class	Class H
7.0	Impedance	3% / 5% (As per system calculation)
8.0	Maximum temperature rise	95 Deg. C

© 2022 MECON Limited All rights reserved

9.0	Ambient temperature	50 deg. C
10.0	Location	Normally in the drive panel (In a separate enclosure in case of large size).
11.0	Execution	IP 21
12.0	Termination	- Cables - All termination should be brought out on 6 or 10 mm thick fibre glass strip. - Terminal description should be engraved on termination strip.
13.0	Cooling	AN
14.0	Winding Material	CRGO Si grade steel, Grade 51 or better
	Construction	Coils should be hot dipped and whole assembly should br dipped in varnish. Clamping stud should be insulated from lamination.
15.0	Rating	Inductance : As per calculation RMS current rating : As per calculation Inductance : AS per calcualtion
16.0	Characteristic	Reactors shall be linear upto 200% of rated current.

11.3 LOAD COMMUTATED INVERTER (LCI)

1.0	Standard	IEC 146-1-2
2.0	Power System Input	3 Phase AC, +/- 10% of rated voltage.
3.0	Input voltage dip	30 % of rated voltage without tripping.
4.0	Frequency	50 Hz. , +3% / -6%
5.0	Operating environment	50 deg. C, with 95 % RH non condensing.
6.0	Type of motor to be controlled	Synchronous motor.
7.0	Efficiency	More than 99%.
8.0	Isolation transformer	- Indoor installation

© 2022 MECON Limited All rights reserved

		- Oil or dry typeas per IEC 76-2 - Typical winding configuration: • 6 pulse LCI :– Delta-Wye • 12 Pulse LCI :- Delta-Delta-Wye - Winding conductor : Copper Refer specifications of Converter transformers also.
9.0	Bridge device	Thyristor
10.0	**Configuration**	
(i)	Source bridge	AC fed 6 or 12 pulse SCR , regenerative with N+1 devices.
(ii)	Load bridge	6 or 12 pulse output configuration with N+1 devices.
(iii)	Clarification on N+1 devices	To achieve current rating requirements if more than one thyristor are used in one bridge circuit arm then each bridge circuit arm shall have one additional thyristor (N+1) to be provided so that failure of one thyristor shall not affect the system. In case the entire Source/load bridges are given in multiple numbers to achieve the current rating then also one additional source/load bridge shall be given. However if only one thyristor (or device) in one bridge circuit arm is selected as per current rating requirement and multiple bridges are also not used for enhancing the current rating requirement then N+1 redundancy need not to be considered.
11.0	Output speed control range	10 – 160% of rated speed.
12.0	Overload	150% overload for 1 minute / every 10 minutes (for CT loads). 110% overload for 1 minute / every 10 minutes (for VT loads).
13.0	Control	• Forced commutation below 10 % of rated speed. • Load commutated above 10 % of rated speed. • Torque regulated. • 4 quadrant speed control. • Volt / Frequency control. • Field excitation control. • Programmable acceleration/ deceleration ramps.

© 2022 MECON Limited All rights reserved

14.0	Control accuracy	Without tacho	With tacho
(i)	Speed regulation	0.1 %	0.005 %
(ii)	Max. starting torque	0.75 PU	2.0 PU
(iii)	Max. forward speed	1.0 PU	1.0 PU
(iv)	Max. reverse speed	0.5 PU	1.0 PU
(v)	Constant HP speed range	Base to top	Base to top
(vi)	Constant torque speed range	0.1 to base	1.5 Hz to base
15.0	Torque reversal principal	DC link voltage reversal by firing of anti parallelthyristors in the bridge. No contactor is to provided for the same.	
16.0	Protection	• Overcurrent • Overvoltage • Earthfault • Over temperature • Motor bearing and winding temperature measuring and protection.	
17.0	Cooling	• Water cooled with deionized water. • Redundant cooling pump with automatic control.	
18.0	Auxiliary power supply	415V AC, 3 phase, 50 Hz.	
19.0	Reliability	N+1 SCR redundancy (extra SCR in each bridge circuit) for full power output even in the event of a device failure. Refer 10.0 above.	
21.0	Loudness	Less than 70 Db at 1 metre from enclosure.	
22.0	I/O	• Standard I/O's as per manufacturer. • In addition to standard I/O's , a dedicated PLC in the drive panel for sequencing and interlocking of all the hardware interlocks of the LCI.	
23.0	Metering	• Analog meters mounted on drive panels. • For remote monitoring required transducers/ converters for transmission of signals in HMI.	

© 2022 MECON Limited All rights reserved

24.0	Feedback devices	• Encoder for position feedback • Tacho for speed feedback
25.0	Communication bus	• Profibus / Controlnet / Modbus compatibility. In case of making compatible with PLC communication bus, required hardware and software to be provided.
26.0	Cable entry	Top or bottom cable entry with no additional cubicle.

11.4 MOTOR CONTROL CENTRE (INTELLIGENT/NON-INTELLIGENT TYPE)

A. General		
1.0	Type	Metal clad.Drawout/ Non drawout type as specified in TS.
2.0	Construction	Modular construction. Fully compartmentalized with metal / insulating material partition.
3.0	Enclosure class	IP54.
4.0	Type of execution	Single front.
5.0	Mounting	Floor mounting. Free standing with ISMC 75.
6.0	Installation	Indoor.
B. Constructional Features :-		
1.0	Sheet steel	
	Thickness	2.0 mm for load bearing members. 1.6 mm for non load bearing members.
	Material	CRCA
2.0	Cable entry	Incomer :- Bottom cable entry. Outgoing :- Bottom cable entry.
3.0	Design	Separate enclosed/isolated cable alley (minimum 275mm wide) for each vertical. Cable alley & module doors shall open opposite to each other. Extendable at both ends. Rear access through removable rear hinged cover door. All the components shall be accessible from front.

© 2022 MECON Limited All rights reserved

		Motor controller shall be flush mounted on the respective door. Interchangeable facility of same type of feeder modules in case of draw out design. Each module (draw out) to have covering at the bottom. ACB cubicle door shall also close when the ACB is in isolated position.
4.0	Interlocking & protection	Module door interlocked with main power isolating devices with defeat facility. Power circuit isolation device to have pad locking in the OFF position with door closed.
5.0	Operating height	Minimum :- 300mm.or as per type tested design conforming to IEC 61439 Maximum :- 2000 mm. Minimum 200mm vacant space shall be provided throughout the panel at bottom.
6.0	Gland plate	Undrilled removable bottom gland plates (3 mm thick).
7.0	Miscellaneous	Neosprene rubber gasket shall be provided for all the doors, removable covers & between adjacent covers. Lifting hooks for all the shipping sections. Doors shall have concealed hinges.
8.0	Labelling	Clear legible identification labels (anodized aluminium with white letters engraved on black background) with letter sizes of:- 25-50 mm for MCC panel in front and back side of the panel. 5 mm for components and module name plates. Danger board on front and rear sides in English, Hindi & regional language.
9.0	Earthing	Two separate earthing terminals shall be provided. Bolted joints with tooth spring washers for good earth continuity. Earth bus to run in all cable alley of the panel.
10.	Shipping length	To be limited to 2.4 M.
11.	Limiting dimensions	Width of MCC Vertical :- 775 mm (min) Width of Module :- 500 mm (min)

© 2022 MECON Limited All rights reserved

		Width of Cable alley :- 275 mm (min) Height of module :- 400 mm (min) for motor feeder, 300mm (min) for power supply feeders Depth of MCC :- 600 mm , maximum However depth of incoming ACB panel shall be 1200 mm (minimum). Can be accepted as per govt.acccridiated lab approved type test report and conforming to IEC-61439
12.	Panel space heater	In each panel with thermostat, DPMCB, switch.
C.	**Busbars**	
(i)	**Main horizontal & vertical busbars**	
1.0	Arrangement	Three phase & neutral. Bus Bar chamber on the top.
2.0	Material	High conductivity electrolytic aluminium alloy confirming to grade E91E as per IS-5082 -1981.
3.0	Phase Busbar Rating	Shall be able to carry continuously the connected load (considering diversity factor) plus a 25% margin. Minimum rating shall be same as incomer ACB/MCCB rating. Max. current density shall be:- 0.8 A/sq.mm for Aluminium. 1.5 A/sq.mm for Copper.
4.0	Neutral Busbar Rating	50% of phase busbar rating.
5.0	Short circuit rating	50 kA for 1 sec.
6.0	Busbar configuration	Red-yellow-blue from front to back or top to bottom or left to right as viewed from front.
7.0	Busbar insulation	Heat shrinkable PVC. R,Y,B coloured sleeves for phases.Black for neutral.
8.0	Busbar supporting insulators	Non-hygroscopic, Flame retarded. Track resistant. High strength. Sheet moulded compound or equivalent polysterfibre glass moulded type.
9.0	Max. temp. rise of bus	Not to exceed 40 deg. C. above ambient of 50 deg.C.

© 2022 MECON Limited All rights reserved

10.	Air clearance for bare busbar	Phase to phase :- 25.4 mm (minimum) Phase to earth :- 19.0 mm (minimum)
11.0	Joints and tap off points	Busbar joints and tap off points shall be shrouded and bolted (with cadmium coated bolts with plain and spring washers and locknuts). Bimetallic connectors for connection between dissimilar metals. Anti oxide grease for all bus connections.
12.0	Neutral bus isolation	Through disconnecting link.
13.0	Vertical busbar	Rear side.
(ii)	**Earth bus**	
1.0	Material	GI / Al.
2.0	Size	Minimum 50 x 6 mm at bottom of panel with extension at both ends.
(iii)	**Control bus**	
1.0	Material	Copper. (Control Bus on top Busbar chamber front side).
2.0	Size	Minimum 25 x 3 mm or equivalent.
3.0	Segment	Control bus shall be sectionalized and each bus shall be fed from control trafo of respective section. However selector switch in one module shall be available to select the feed of both sections of control bus from either of control trafo also.
4.0	Selector Switch	25A, 4 position (Trafo -1, Trafo -2, Individual, OFF) and as described above.
(iv)	**Power supply bus for motor controller (from UPS)-(Applicable for IMCC)**	
1.0	Voltage	240/110V AC, 50 Hz distribution through separate DP MCBs for each module.
1.0	Material	Copper. (Control Bus on top Busbar chamber front side).
2.0	Size	Minimum 25 x 3 mm or equivalent.
D.	**Insulation level**	

© 2022 MECON Limited All rights reserved

1.0	Rated insulation voltage	1100 V.
2.0	Impulse withstand voltage	4 kV as per IS-13947 (Part I) 1993.
3.0	One minute power frequency withstand voltage	2.5 kV for power circuit & 500 V for control circuit.
E. Pollution Degree		
1.0	Pollution Degree	Pollution Degree 3 . As per IS-13947 (Part-1) : 1993;unless otherwise stated
F. Intelligent Motor Controllers (Applicable for IMCC)		
1.	Type	Modular type.
2.	Wiring	All the potential transformer PT's, protection CT's (phase CT and neutral CT) shall be hard wired directly to the controller or the controller module shall have builtin CT and PT for protection & metering purpose.
3.	Control Power supply	Separate power supply source (240/110V AC) from UPS through DP MCB (for controller only). For coil of Contactors, relays, lamps etc. separate control power supply at 240/110 V AC from MCC control bus through DP MCBs.
4.	Inputs and outputs	Controller to be used as for Motor Protection, Metering & remote monitoring purposes through communication to L1 automation. For motor start/stop, feedback, interlocks etc. potential free contacts of Power contactors, aux. contactors, relays, breakers etc. shall be wired to Automation/PLC IO cabinet.
5.	Functions in controller	Protection, Metering&Annunciations and communicating to L1 automation for remote monitoring.
6.	Fault memory	Faults to be stored in memory on FIFO sequence.
7.	LED indications	Controller healthy Controller fault Controller power supply healthy
8.	Communication	Each motor controller unit shall communicate on the communication bus (Devicenet / Modbus / Profibus DP/Ethernet) with PLC/DCS directly for remote monitoring.
9.	Communication Port	1 nos.

© 2022 MECON Limited All rights reserved

10.	Communication configuration	Maximum of 20 numbers of controller shall be looped for communication to Plant PLC/DCS. For each group of 20 controllers, separate Y link/RLM shall be installed with IMCC inside a separate module at suitable location.
11.	Communication speed	Minimum 1.5 to 12Mbps.
12.	Control	Through L1 automation & from HMI (located in control room).
13.	Software	All the configuration and monitoring shall be done through inbuilt software. All the required software required for operation and communication shall be provided with latest version available.
14.	Protections	Thermal overload Adjustable overload pre-alarm Earth fault Stalling Unbalance Short circuit Single phase prevention Under current Too many starts Under voltage Under voltage lockout Breaker or contactor failure alarm Trip failure alarm Over temperature Winding and bearing temperature (if applicable for motor).
15.	Display Unit with LCD (to be mounted on Module door)and through communicationwith HMI at control room	Voltage, Frequency Power factors Power consumption, KW Thermal capacity Temperature Phase and average Amp. Earth fault current

© 2022 MECON Limited All rights reserved

		% motor load % unbalance Peak current during starting Starting time Pre trip values
16.	Fault / alarm history description	No. of trips No. of operations (Forward / reverse) Hours run Hours run last start Kilowatt hours Kilowatt peak demand Alarm / trip history (with date and time) Alarm / trip description Reference start curve (in graphics) Start curve (in graphics) Time to trip / reset
G. Feeder arrangement		
Incomers and Buscoupler		
1.0	Isolating Equipment	3 Pole MCCB upto 630A. Above 630A, 3 pole ACB motor operated spring charging. 4 pole ACB in case of DG source as second Incomer. All MCCBs/ACBs shall be microprocessor based with LSIG releases. Each incomer shall be provided with one Control transformer of minimum 500VA rating with auto changeover, MPCBs at primary side & DP MCBs at secondary for control & indication lamps for incomers.
2.0	Quantity	Two incomer
3.0	Bus coupler	Required.
4.0	Interlocking	Required. Normally only one Incomer shall be ON. After incoming power failure of any Incomer or ACB trips, second Incomer shall be made ON manually.

© 2022 MECON Limited All rights reserved

5.0	Interlocking type	Electrically. Mechanical (through castle key).
6.0	Indication Lamps	LED cluster type indicating lamps for:- Incoming Power ON: R / Y / B. MCCB/ ACB ON/OFF/TRIP/SPRING CHARGED etc.
7.0	Meters and selector switches	96 sq.mm size voltmeter with 4 position selector switches.Analog/Digital 96 sq.mm size ammeter with 4 position selector switches.
8.0	Current transformer	3 numbers for protection. 3 numbers for metering. 1 number neutral CT. 1 number interposing CT (if required).
9.0	Potential transformer	1 number
H.	**Outgoing feeder arrangements**	
(i)	**Motor Starter feeders**	
1.0	Circuit breaker	Three pole Motor protection MCCB (or MPCB upto 45 KW).
2.0	Power contactor	AC3/AC4 as per requirement. 3 pole. Minimum 25 A at AC-3 duty. Contactor coil rating for 240/110 V AC. 2NO + 2NC auxiliary contacts. Electrically & Mechanically interlocked for reversible drives.
3.0	Auxiliary contactors	Required nos. as per scheme.
4.0	Protection	For conventional MCC (NIMCC) – EOCR for all motor feeders as per specification of Major components given under clause No.10.0. For IMCC - Intelligent motor controller with communication for all motor feeders as per specification given above under F.
5.0	Control supply isolation	DP MCB

© 2022 MECON Limited All rights reserved

	device	
6.0	Test PB	Inside module for testing of power contactors when the module incoming power breaker is OFF.
7.0	Space heater power provision	For motor feeders of 45 KW and above:- Through separate DP MCB and interlock with main power contactor.
8.0	Ammeter in LCS	Interposing CT (middle phase) shall be provided in the feeder module for motor rating 45 KW and above.
9.0	Indication lamps (LED)	ON/OFF/TRIP for DOL, FON/RON/OFF/TRIP Open/Close/Open Torque/Close Torque for valves etc. for RDOL/Valve as applicable.
10.0	Ammeter on Feeder Module	In case of conventional MCC, an Ammeter with selector switch for 3 phase current shall be provided for all Motor feeders above 15 kW.
11	Selection of Power Components	As per Appendix-1 (Table -1A) attached.
(ii)	**Power supply feeders**	
1.0	Circuit breaker	3 Pole with neutral link MCCB, microprocessor based with LSIG release. In case earth fault release is not available with smaller rating MCCB, same shall be through external CBCT.
2.0	Indications	ON/OFF/TRIP indication lamp.
I.	**Panel wiring**	
1.0	Power / current transformer circuit	1.1kV grade single core, black colour PVC insulated, stranded copper conductor of minimum size 2.5 sq.mm. For feeder rating 100A and above all the power circuit shall be through rigid busbar.
2.0	Control and potential circuit	1.1kV grade single core. Black colour PVC insulated. Stranded copper conductor of minimum size 1.5 sq.mm.
3.0	Ferrules	Numbered plastic/ceramic ferrules. Self locking type. Ferrule numbers of wires connected to Terminal shall have same as TB number.

© 2022 MECON Limited All rights reserved

4.0	Marking	Wiring shall be properly marked as per relevant IS.
5.0	Spare contacts	All spare contacts of relays, selector switches & contactors shall be wired upto the terminal block. Each components shall have at least one potential free spare contacts.
6.0	Terminals	Power & control terminals shall be segregated by insulating material like hylam/bakelite sheet. Power terminals shall be stud type. Control terminals shall be single tier, non-breakable Clip On type suitable for connecting two cores of 2.5 sq.mm wires. Minimum 20% spare terminals shall be provided. The minimum rating of control terminal shall be 10 Amps. CT Terminals shall be disconnecting type with shorting links. Ferrule numbers shall be same as TB Numbers.
7.0	Cable glands	Double compression cable glands for receiving external power and control cables.
J.	**Control Supply**	
1.0	Control transformer	1 number of 415V/240/110V control transformer of minimum 2.5 KVA in each section. **(For Mining areas & Beneficiation/any Process Plant at Mining area)** 110V, AC using suitable control transformers having secondary mid point earthed. **Common** Secondary unearthed. Control supply for each module shall be through DP MCBs inside respective module. Control supply ON lamps with earth fault test PB to be provided.
2.0	Input and output side isolation device	Input side :- MCCB/MPCB Output side :- DP MCB
3.0	Control supply changeover system	Manual changeover through selector switch (Selector switch shall have a contact rating of 25 A at 240/110 V AC). Power contactor of 25A (AC3) duty to be provided with each control transformer module for interlocking of control supply with Bus Power.

© 2022 MECON Limited All rights reserved

K.	**Space Heater Supply**	
1.0	Space Heater Power supply	240/110V AC power supply for Space heater/panel illumination shall be arranged by tapping from phase & neutral side of both incomers by providing MPCB at incomer side, auto-change over arrangement, power contactor, DP MCBs, thermostat etc.

11.5 STAND ALONE STARTER OR **MCP** PANEL

A.	**General :-**	
1.0	Type	- Metal clad. - Non drawout type.
2.0	Construction	- Modular construction. - Fully compartmentalized with metal / insulating material partition.
3.0	Enclosure class	IP52.
4.0	Type of execution	Single front.
5.0	Mounting	- Floor mounting. - Free standing with ISMC 75.
6.0	Installation	Indoor.
B.	**Constructional Features :-**	
1.0	Sheet steel	
	Thickness	- 2 mm for load bearing members. - 1.6 mm for non load bearing members.
	Material	CRCA
2.0	Cable entry	- Incomer :- Bottom cable entry. - Outgoing :- Bottom cable entry.
3.0	Design	- Rear access through removable rear hinged cover door. - All the components shall be accessible from front.
4.0	Interlocking & protection	- Module door interlocked with main power isolating devices. - Power circuit isolation device to have pad locking in

© 2022 MECON Limited All rights reserved

		the OFF position with door closed.
5.0	Operating height	- Minimum :- 300mm. - Maximum :- 2000 mm.
6.0	Gland plate	Undrilled removable bottom gland plates(3 mm thick).
7.0	Miscellaneous	- Neosprene rubber gasket shall be provided for all the doors, removable covers & between adjacent covers. - Lifting hooks for the panel. - Doors shall have concealed hinges.
8.0	Labelling	Clear legible identification labels (anodized aluminium with white letters engraved on black background) with letter sizes of:- - 25-50 mm for panel. - 5 mm for components and module name plates. - Danger board on front and rear sides in English , Hindi and local language.
9.0	Earthing	- Two separate earthing terminals shall be provided. - Bolted joints with tooth spring washers for good earth continuity.
10.0	Panel space heater	In each panel with thermostat, DP MCB, switch.
C. Busbarsfor Power components (Bus Bar chamber on the top Not applicable for Standalone Panel).		
1.0	Arrangement	Three phase & neutral.
2.0	Material	High conductivity electrolytic aluminium alloy confirming to grade E91E as per IS-5082 –1981.
3.0	Phase Busbar Rating	- Shall be able to carry continuously the connected load (considering all derating factors) plus a 25% margin. - Max. current density shall be; • 0.8 A/sq.mm for Aluminium. • 1.5 A/sq.mm for Copper.
4.0	Neutral Busbar Rating	50 % of phase busbar rating.
5.0	Short circuit rating	50 KA for 1 sec.
6.0	Busbar configuration	Red-yellow-blue from front to back or top to bottom or

© 2022 MECON Limited All rights reserved

		left to right as viewed from front.
7.0	Busbar insulation	Heat shrinkable PVC - R,Y,B coloured sleeves for phases. - Black for neutral.
8.0	Busbar supporting insulators	- Non-hygroscopic - Flame retarded - Track resistant - High strength - Sheet moulded compound or equivalent polysterfibre glass moulded type.
9.0	Max. temp. rise of bus	Not to exceed 35 deg. C. above ambient of 50 deg.C.
10.0	Air clearance for bare busbar	Phase to phase :- 25.4 mm (minimum) Phase to earth :- 19.0 mm (minimum)
11.0	Joints and tap off points	- Busbar joints and tap off points shall be shrouded and bolted (with cadmium coated bolts with plain and spring washers and locknuts). - Bimetallic connectors for connection between dissimilar metals. - Antioxide grease for all bus connections.
12.0	Neutral bus isolation	Through disconnecting link .
13.0	Busbar access	Rear side
(ii)	**Earth bus**	
1.0	Material	GI/Al.
2.0	Size	Minimum 50 x 6 mm with extension at both ends.
(iii)	**Control bus/Space Heater Bus (Each Separate Bus)**	
1.0	Material	Copper wire bus
2.0	Size	Minimum 2.5 sq.mm copper stranded wires .
D.	**Insulation level**	
1.0	Rated insulation voltage	1100V
2.0	Impulse withstand voltage	4 KV as per IS-13947 (Part I) 1993.

© 2022 MECON Limited All rights reserved

3.0	One minute power frequency withstand voltage	2.5 KV for power circuit & 500 V for control circuit.
E. Pollution Degree		
1.0	Pollution Degree	Pollution Degree 3. as per IS-13947 (Part-1) : 1993;unless otherwise stated.
F . Components		
1.0	Isolating Equipment	3 pole Motor Protection MCCB.
2.0	Indication Lamps	LED type indicating lamps for:- - ON/OFF/TRIP. - Power ON R / Y / B.
3.0	Meters and selector switches	- 96 sq.mm size voltmeter with 4 position selector switches - 96 sq.mm size ammeter with 4 position selector switches.
4.0	Power contactor	AC3 duty of rated capacity – Minimum rating as per Appendix-1 (Table -1A).
5.0	Motor protection relay	For conventional MCP (NIMCP) – EOCR for all motor feeders as per specification of Major components given under clause No.10.0 For Intelligent type Motor Control Panels (IMCP) - Intelligent motor controller with communication for all motor feeders as per specification given above under Clause 9.4 (F)-MCC. Controller to be used as for Motor Protection, Metering & remote monitoring purposes through communication to L1 automation. For motor start/stop, feedback, interlocks etc. potential free contacts of Power contactors, aux. contactors, relays, breakers etc. shall be wired to Automation/PLC IO cabinet.
6.0	Auxiliary contactors	- Shall be provided for logic operation and operating sequence. - Shall have minimum 2NO+2NC auxiliary contacts.
7.0	Ammeter in LCS	Interposing CTs (in three phases) shall be provided for motor rating 110 KW and above.
G. Panel Wiring		

© 2022 MECON Limited All rights reserved

1.0	Power / current transformer circuit	1.1kV grade single core, black colour PVC insulated, stranded copper conductor of minimum size 2.5 sq.mm.
1.0	Power / current transformer circuit	1.1kV grade single core, black colour PVC insulated, stranded copper conductor of minimum size 2.5 sq.mm.
2.0	Control and potential circuit	- 1.1kV grade single core. - Black colour PVC insulated. - Stranded copper conductor of minimum size 1.5 sq.mm.
3.0	Ferrules	- Numbered plastic/ceramic ferrules. - Self locking type. - Ferrule numbers shall be same as TB numbers
4.0	Marking	- Wiring shall be properly marked as per relevant IS.
5.0	Spare contacts	- All spare contacts of relays selector switches & contactors shall be wired upto the terminal block. - Each components shall have at least one potential free spare contacts.
6.0	Terminals	- Power & control terminals shall be segregated by insulating material like hylam / bakelite sheet. - Power terminals shall be stud type. - Control terminals shall be single tier non-breakable clip on type suitable for connecting two cores of 2.5 sq.mm wires. - Minimum 20% spare terminals shall be provided. - The minimum rating of control terminal shall be 10 Amps. - CT Terminals shall be disconnecting type with shorting links.
7.0	Cable glands	- Double compression cable glands for receiving external power and control cables
I. Control Supply		
1.0	Control transformer	1 number. of 415V/240/110V control transformer of minimum 2.5 KVA. Secondary unearthed. For Mining areas & Beneficiation/any Process Plant at Mining area). 110V, AC using control transformers having secondary

© 2022 MECON Limited All rights reserved

		mid point earthed.
2.0	Input and output side isolation device	Input side :- MCCB/MPCB Output side :- MCB

11.6 SOFT STARTER

A. Design Criteria:-		
1.0	Incoming supply voltage	As per design basis clause 1.04 to 1.07.
2.0	Control Supply	240/110V AC through control transformer of 2.5KVA min rating with primary MPCB ans secondary DP MCB.
3.0	Output	Full wave in line control
4.0	Device	IGBT/Thyristor
5.0	Acceleration	Stepless
6.0	Pump control	Starting :- 2 – 30 seconds Stopping :- 2 – 120 seconds
7.0	Adjustable current limit	500 % of In .
8.0	Adjustments	- Dwell time at current limit with ramp continuation after acceleration . - Acceleration time adjustable current limit - Minimum voltage adjustment - Voltage stability adjustment. - Initial torque ramp time adjustment . - Kick start
9.0	Overload tripping range	100 – 130 %
10.0	Overload capacity	Continuous :- 115 % 60 seconds :- 250 % 30 seconds : - 300 % 05 seconds :- 450%
11.0	Other features	- Shall have facility to run in energy saving mode during light load operation (less than 50% of rated)of the drive. - Shall have bypass mode. Motor can run in bypass mode in DOL in case of fault with softstarter.

© 2022 MECON Limited All rights reserved

		- Soft starter mode or Bypass mode can be selected through selector switch mounted on front side of the panel. - In auto mode, Motor under either softstarter/Bypass mode shall start / stop after getting command from PLC. - Under local mode Motor under either softstarter/ Bypass mode shall start / stop after getting command from LCB. Local/remote selection to be done from LCB. - Shall have the facility of kickstart . - Shall be able to communicate to PLC for monitoring. Accordingly suitable cards/ modules shall be mounted.
12.0	Protections	- Short circuit - Overload . - Under voltage protection - Current monitoring in each phases - Transient voltage suppressor (MOV) - Heat sink overtemperature protection - Over temperature switches on each pole. - RC Snubberckt. - Semiconductor fuse to be provided before the soft starter controller. - Single phase protection
13.0	LED Indications	- Power ON (green) - RUN (amber) - Fault (red) - O/C trip (red) - Phase loss trip (red) - Auxiliary trip (red)
B. General :-		
1.0	Type	- Metal clad. - Non drawout type.
2.0	Construction	- Modular construction. - Fully compartmentalized with metal / insulating material partition.

© 2022 MECON Limited All rights reserved

3.0	Enclosure class	IP42.
4.0	Type of execution	Single front.
5.0	Mounting	- Floor mounting. - Free standing with ISMC 75.
6.0	Installation	Indoor.
C. Constructional Features :-		
1.0	Sheet steel	
	Thickness	- 2 mm for load bearing members. - 1.6 mm for non load bearing members.
	Material	CRCA
2.0	Cable entry	- Incomer :- Bottom cable entry. - Outgoing :- Bottom cable entry.
3.0	Design	- Rear access through removable rear hinged cover door. - All the components shall be accessible from front
4.0	Interlocking & protection	- Module door interlocked with main power isolating devices. - Power circuit isolation device to have pad locking in the OFF position with door closed.
5.0	Operating height	- Minimum :- 300mm. - Maximum :- 2000 mm.
6.0	Gland plate	Undrilled removable bottom gland plates (3 mm thick).
7.0	Miscellaneous	- Neosprene rubber gasket shall be provided for all the doors, removable covers & between adjacent covers. - Lifting hooks for the panel. - Doors shall have concealed hinges.
8.0	Labelling	- Clear legible identification labels (anodized aluminium with white letters engraved on black background) with letter sizes of:- - 25-50 mm for panel. - 5 mm for components and module name plates.

© 2022 MECON Limited All rights reserved

		- Danger board on front and rear sides in English, Hindi and local language.
9.0	Earthing	- Two separate earthing terminals shall be provided. - Bolted joints with tooth spring washers for good earth continuity.
10.0	Panel space heater	In each panel with thermostat, DP MCB, switch.
11.0	Ventilation of Panel enclosure	Cooling fans with Louvers as required.
D. Busbarsfor Power components (Bus Bar chamber on the top Not applicable for Standalone Panel).		
1.0	Arrangement	Three phase & neutral.
2.0	Material	High conductivity electrolytic aluminium alloy confirming to grade E91E as per IS-5082 –1981.
3.0	Phase Busbar Rating	Shall be able to carry continuously the connected load (considering all derating factors) plus a 25% margin. Max. current density shall be; 0.8 A/sq.mm for Aluminium 1.2 A/sq.mm for Copper.
4.0	Neutral Busbar Rating	50% of phase busbar rating.
5.0	Short circuit rating	50kA for 1 sec.
6.0	Busbar configuration	Red-yellow-blue from front to back or top to bottom or left to right as viewed from front.
7.0	Busbar insulation	Heat shrinkable PVC. R,Y,B coloured sleeves for phases. Black for neutral.
8.0	Busbar supporting insulators	Non-hygroscopic Flame retarded Track resistant High strength Sheet moulded compound or equivalent polysterfibre glass moulded type.
9.0	Max. temp. rise of bus	Not to exceed 35 deg. C. above ambient of 50 deg.C.

© 2022 MECON Limited All rights reserved

10.0	Air clearance for bare busbar	Phase to phase :- 25.4 mm (minimum) Phase to earth :- 19.0 mm (minimum)
11.0	Joints and tap off points	Busbar joints and tap off points shall be shrouded and bolted (with cadmium coated bolts with plain and spring washers and locknuts). Bimetallic connectors for connection between dissimilar metals. Antioxide grease for all bus connections.
12.0	Neutral bus isolation	Through disconnecting link.
13.0	Busbar access	Rear side.
(ii)	**Earth bus**	
1.0	Material	GI/AL at bottom of panel.
2.0	Size	Minimum 50 x 6 mm with extension at both ends.
(iii)	**Control bus/Space Heater Bus (Both separate)**	
1.0	Material	Copper wire bus.
2.0	Size	Minimum 2.5 sq.mm copper stranded wires.
E.	**Insulation level**	
1.0	Rated insulation voltage	1100 V
2.0	Impulse withstand voltage	4 Kv as per IS-13947 (Part I) 1993
3.0	One minute power frequency withstand voltage	2.5 Kv for power circuit & 500 V for control circuit
F.	**Pollution Degree**	
1.0	Pollution Degree	Pollution Degree 3 as per IS-13947 (Part-1): 1993;unless otherwise stated.
G .	**Components**	
1.0	Isolating Equipment	3 poleMCCB microprocessor based with LSIG release.
2.0	Indication Lamps	LED type indicating lamps for:-MCCB ON/OFF/TRIP. Incoming power R / Y / B. Auto / Remote / Local /Soft starter mode / bypass mode.

© 2022 MECON Limited All rights reserved

		Motor ON / OFF / TRIP as applicable.
3.0	Meters and selector switches	96 sq.mm size voltmeter with 4 position selector switch. 96 sq.mm size ammeter with 4 position selector switch.
4.0	Power contactor	AC3 duty of rated capacity.
5.0	Overload protection under Bypass mode	Through EOCR in case of rating less than 75kW.Through Intelligent motor controller for rating more than 75kW. Intelligent controller to be used as for Motor Protection, Metering & remote monitoring purposes through communication to L1 automation. For motor start/stop, feedback, interlocks etc. potential free contacts of Power contactors, aux. contactors, relays, breakers etc. shall be wired to Automation/PLC IO cabinet.
6.0	Auxiliary contactors	Shall be provided for logic operation and operating sequence. Shall have minimum 2NO+2NC auxiliary contacts.
7.0	Door mounted operating devices	Start / stop operating PB, Reset PB. Selector switches :-Auto / Remote / Local. Soft starter mode / bypass mode.
8.0	Ammeter in LCS	Interposing CTs (in three phases) shall be provided for motor rating 110 KW and above. Interposing CT (middle phase) shall be provided for motor rating 45 KW and up to 90kW.
H.	**Panel Wiring**	
1.0	Power / current transformer circuit	1.1kV grade single core, black colour PVC insulated, stranded copper conductor of minimum size 2.5 sq.mm.
2.0	Control and potential circuit	1.1kV grade single core. Black colour PVC insulated. Stranded copper conductor of minimum size 1.5 sq.mm.
3.0	Ferrules	Numbered plastic/ceramic ferrules. Self locking type.
4.0	Marking	Wiring shall be properly marked as per relevant IS.
5.0	Spare contacts	All spare contacts of relays selector switches & contactors shall be wired upto the terminal block. Each components shall have at least one potential free

© 2022 MECON Limited All rights reserved

		spare contacts.
6.0	Terminals	Power & control terminals shall be segregated by insulating material like hylam / bakelite sheet. All control field wiring terminals shall be front access. Power terminals shall be stud type. Control terminals shall be single tier, non-breakable clip on type suitable for connecting two cores of 2.5 sq.mm wires. Minimum 20% spare terminals shall be provided. The minimum rating of control terminal shall be 10 Amps. CT Terminals shall be disconnecting type with shorting links. Ferrule numbers of all TB shall be same as TB numbers.
7.0	Cable glands	Double compression cable glands for receiving external power and control cables.
I. Control Supply		
1.0	Control transformer	1 no. of 415V/240/110 V control transformer of minimum 2.5 KVA. Secondary unearthed.
2.0	Input and output side isolation device	Input side :- MCCB/MPCB Output side :- MCB

11.7 LOCAL CONTROL STATIONS

1.0	Material	Sheet steel (CRCA) 2 mm thick
2.0	Mounting	Wall / structure mounted.
3.0	Enclosure class	IP-54 (for indoor installation). IP-55 with canopy (for outdoor installation).
4.0	Door opening	Hinged type front door opening .
5.0	Cable gland	Removable undrilled, To be provided on bottom.
6.0	Internal wiring	2.5 sqmm, single core, stranded, black PVC insulated

© 2022 MECON Limited All rights reserved

		copper conductor.
7.0	No.of components like ON/OFF PB's , selector switches etc.	As per scheme requirement.
8.0	Contact details of components .	All Push buttons - 2NO + 2NC contacts & selector switches of 10 A rating. 1 NO & 1 NC contacts of PBs &polesof Selector switch shall be potential free for PLC inputsas per control circuit design.
9.0	Emergency Stop PB	RED in colour. Mushroom headed. Press to lock and turn to release type. 2NO + 2NC contacts.
10.0	Start/Open/Close push button details Additionally for VFD motors Speed Increase/ Speed decrease/if required Stop. For RDOL motors Forward start / Reverse Start	Start push button shall be GREEN in colour. Shrouded type. 2NO + 2NC contacts.
11.0	Lamp details (if any)	High density LED type.
12.0	Location of selector switches	Local/ Remote selector switches shall be installed in the LCS.
13.0	Terminal blocks	- Shall be able to terminate wires of 2.5 sq.mm size. - Not more than two wires shall be terminated in a single terminal block. - Shall be mounted on D-channels. - 30 % spare terminals shall be provided. - Colour of TBs for different voltages shall be different. - Single tier, non-breakable, clip on type. - Ferrule numbers of wires shall be same as TB numbers.
14.0	Miscellaneous	LCS may be used for termination of maximum one number of additional 7 core control cable for field switches, if required.
15.0	Provision of ammeter.	For motors ratings of 45kW and above, Ammeters on

© 2022 MECON Limited All rights reserved

		middle phase shall be provided. For motor rating 110kW & above, ammeter with selector switch shall be provided for three phase current.
16.0	Earthing	Earthing studs shall be provided on two opposite sides. Internally the earthing studs shall be connected with the body through green colour PVC insulated copper flexible wire.

11.8 CONTROL DESK

1.0	Material	Sheet steel (CRCA). 2.5 mm thick.
2.0	Mounting	Free standing. Floor mounting pedestal mounting or trunion mounting.
3.0	Enclosure class	IP-54 (for indoor installation). IP-55 (for outdoor installation in bays).
4.0	Door opening	Hinged type front door opening. Hinged top cover with latching facilities in open position.
5.0	Cable gland	Removable undrilled. To be provided in bottom.
6.0	Internal wiring	2.5 mm, single core, stranded, black PVC insulated copper conductor.
7.0	Angle of inclination	8 degrees.
8.0	Components like ON/OFF PB's , selector switches etc.	Control switches, push buttons and indication devices mounted on top cover and wired upto terminal blocks using extra flexible appropriately insulated wires. Numbers of components shall be as per scheme requirement. Construction and switch layout to provide comfortable operation.
9.0	Lamp test PB	To be provided.
10.0	Contact details of components .	All the components like ON/OFF PB's, selector switches etc. shall have 2NO + 2NC contacts / poles of 10 A rating.

© 2022 MECON Limited All rights reserved

		1 NO & 1 NC contacts of PBs & poles of Selector switch shall be potential free for PLC inputs as per control circuit design.
11.0	Emergency stop push button details	Emergency stop push button shall be installed on top right side of the control desk. Em. PB shall be:- RED in colour. Mushroom headed. Press to lock and turn to release type.
12.0	Start push button details	Start push button shall be; GREEN in colour. Shrouded type.
13.0	Lamp details	High density LED type.
14.0	Terminal blocks	- Shall be able to terminate wires of 2.5 sq.mm size. - Not more than two wires shall be terminated in a single terminal block. - Shall be mounted on D-channels. - 30 % spare terminals shall be provided. - Colour of TBs for different voltages shall be different.
15.0	Spare switches	At least 02 nos. of each types of switches and indication lamps are to be provided as spare in each desk . Two numbers of drilled holes are to be provided . The holes shall be plugged with rubber cap .
16.0	Earthing	Earthing studs shall be provided on two opposite sides . Internally the earthing studs shall be connected with the body through green colour PVC insulated copper flexible wire .

© 2022 MECON Limited All rights reserved

12.0 SPECIFICATIONS OF MAJOR COMPONENTS

Specification of major components are listed as below and shall be followed unless specified specifically in equipment specification. In case of contradiction between parameter of a specific component in equipment specification and here below then parameters indicated in equipment specification shall prevail.

12.1 MOULDED CASE CIRCUIT BREAKER (MCCB)

1.0	Reference standard	IS : 13947 (Part-2) : 1993.
2.0	Rated Current	Minimum 100A (frame rating). Irated shall be as per load current with 150% margin with adjustable setting.
3.0	Type	Complete with continuous electronic/ microprocessor based adjustable releases.
4.0	MCCB for motor feeders	MCCBs for motor feeders shall be motor protection type conforming to type-2 co-ordination with short-circuit release only.
5.0	Short circuit rating	50 kA (Minimum) (Ics =Icu). (Ics) = Service Short circuit breaking capacity. (Icu) =Rated ultimate short circuit breaking capacity.
6.0	Operating handle	Yes
7.0	Safety Door interlock	Door interlock, Padlocking in ON/OFF position.
8.0	Withstand capability	Rated short time with-stand current (Icw) shall be 12 times maximum rated operational current for 1 sec.
9.0	Utilisation category	AC23B
10.0	Electrical features	- S/C, O/C, E/F protection for power supply feeders & crane trolley line feeder MCCB's. - Features to minimise the let-through energy (I^2t) in the event of short circuit on load side.
11.0	Auxiliary contacts	1 NO + 1 NC, Alarm contacts.
12.0	Miscellaneous	Can be used in load side or line side vice versa. Shunt trip coil.

© 2022 MECON Limited All rights reserved

12.2 AC CONTACTORS

1.0	Service	Indoor within steel cubicle for maximum system voltage, starting of motors and miscellaneous loads
2.0	Standard	Shall conform to IS / IPSS
3.0	No. poles	3 pole air break .
4.0	Operating type	Magnetic coil operated at 240 V AC. No economy resistors. Insulation for coils shall be class 'E' or better
5.0	Rating	25A (Minimum) , Rated generally for 150% of full load motor rated current. However, contactor ratings with respect to motor ratings are standardized and shall be followed as per Table-1A.
6.0	Interrupting capacity	Ten times the rated current for rated size upto 100A and eight times the rated current for larger sizes.
7.0	Duty	According to IEC 158-1 - AC 1 duty :- Non inductive or slightly inductive loads - AC 2 duty :- Slip ring motors : starting , plugging - AC3 duty :- Squirrel cage motors : starting , switching off motors during running - AC4 duty :- Squirrel cage motors : Plugging , inching. Derated AC4 ratings shall be selected for inching and plugging operation of the drive (crane duty).
8.0	Utilisation category	AC23A for unidirectional motors AC24A for bi-directional motors
9.0	Aux. contact requirement	- Minimum 4 NO +4 NC contacts with minimum rating of - 10A , 415 V for rated duty AC-11. - 2A , 220 V for rated duty DC-11. - Shall have the facility of adding add-on contact blocks.
10.0	Closing (pick-up)	85% to 110%
11.0	Dropout	65% to 45%
12.0	Miscellaneous	For RDOL feeders the power contactors shall be

© 2022 MECON Limited All rights reserved

		mechanically interlocked.

12.3 CURRENT TRANSFORMERS:

1.0	Type	Bar type primaries and 5A (max) secondary with thermal and dynamic ratings corresponding to the units with which they are used.
2.0	Accuracy class	- Measuring CT accuracy class 1.0. - Protective CT accuracy class 10 P 10.

12.4 CONTROL TRANSFORMERS

1.0	Type	Dry type, cast resin.
2.0	Voltage	415V/240V.
3.0	Primary taps	+2.5 %, +5 %.

12.5 INDICATING INSTRUMENTS

1.0	Basic details	- Shall not damage by passage of fault current or existence of over voltage for the maximum permitted duration of fault conditions. - Ammeters for drives above 15 kW shall be CT operated. - Voltmeters protected by fuses placed as close to the busbar as possible. - Maximum reading 700% of IFL for motor feeders.
2.0	Mounting	Flush mounting, square dial with zero adjusting device for external operation.
3.0	Accuracy class	1.5
4.0	Size	- Size of voltmeter and ammeter for incomer 96 x 96 mm for incoming feeders. - Size of ammeter for motor feeders 96 x 96 mm.

12.6 THERMAL OVERLOAD RELAYS

1.0	Standard	IEC:292-1
2.0	Basic details	- Triple pole.

© 2022 MECON Limited All rights reserved

		- Ambient temperature compensated. - Inverse time lag. - Hand reset type. - Bimetallic with adjustable setting and builtin single phase protection. - Reset PB shall be operable from outside. - Shall be able to withstand prospective short circuit current without damage or injurious heating till the motor protection MCCB clears the fault. - Auto tripping shall be indicated on MCC.
3.0	Contacts	1 NO + 1 NC contacts with minimum rating of - 10A, 415 V for rated duty AC-11. - 2A, 220 V for rated duty DC-11.

12.7 ELECTRONIC OVERCURRENT (EOCR) RELAYS

1	General	Shall be similar/equivalent to SIEMENS 3RB23 or Samwha EOCR or LG D-EMPR or equivalent.
2	Protection Features	Overcurrent/load, Phase unbalance, phase loss, ground fault, Overheating trip by Thermistor etc.
3	Overcurrent settings	Wide & adjustable.
4	Fault diagnosis	Tripping causes stored in memory shall be available.
5	Reliability	Microprocessor based with Current detection immune to harmonics and external interference like temperature, ageing etc.
6	Tripping Classes	It should be possible to either have selection of trip classes (5/10/15/20) or to have starting trip delay.
7	LCD Display	Seven segment displays for parameter settings, diagnosis etc.

12.8 MAGNETIC OVERLOAD RELAYS

1.0	Standard	IEC:292-1
2.0	Basic details	- Triple pole

© 2022 MECON Limited All rights reserved

		- Ambient temperature compensated. - Adjustable time lag feature or of instantaneous type. - Provided with a latch and hand reset feature or auto reset with flag indication. - Adjustable current setting and time delay calibrated between nominal current and twice nominal current rating.
3.0	Contacts	1 NO + 1 NC contacts with minimum rating of; - 10A, 415 V for rated duty AC-11. - 2A, 220 V for rated duty DC-11.

12.9 PUSH BUTTONS

1.0	Basic details	- All push button switches including illuminated push buttons shall be of sturdy design - Shrouded actuator for "START" application, and "STOP" application shall be provided. - Mushroom Head actuator for “EMERGENCY STOP” shall be latched type with turn to release. - Press to latch in operated position and turn-to-release in unactuated position. - Double break parallel contact design or other suitable design feature enhancing contact reliability required in circuits with electronic interfaces involving low voltages and small currents shall be adopted.
2.0	Size	22.4 mm diameter
3.0	Contact rating	- Minimum 2 NO + 2NC contacts (or 4 NC for Em Stop PB) with following current ratings. • Continuous - 10 A • AC 11 - 1.5 amps at 240V • DC 11 - 0.5 amps at 110 V DC, L / R - 40 ms - All contact faces of contacts shall be of silver or silver alloy. - Facility of adding addon contact blocks to be provided.
4.0	Colour	• Accept - Blue

© 2022 MECON Limited All rights reserved

		• Test - Yellow • Reset - Black

12.10 INDICATING LAMPS

1.0	Type	- LED Cluster type.
2.0	Basic details	- Sufficient number of lamp grips shall be provided for easy replacement of lamps.
2.0	Size	22.4 mm diameter .
3.0	Colour	- For motor 'ON', valve/damper/gate 'OPEN', supply 'ON', breaker 'CLOSE' : Red - For motor 'OFF', valve/damper/gate 'CLOSE', supply 'OFF', breaker 'OPEN' : Green - Fault indication, over load, alarm condition, 'SERVICE & TEST POSITION' indication. - General purpose indication, motor 'AUTO TRIP'. Other colours may be adopted depending upon particular application as approved by the Purchaser.
4.0	Layout of indication lamps on boards / panels	Indicating lamps shall be located just above the associated push-button / control switches. Red lamps shall invariably be located to the right of green lamps. In case a white lamp is also provided, it shall be placed between red and green lamps along the centre line of control switch/ push button pair. Blue and Amber should normally be located above the Red and Green lamps. When associated with push buttons, red lamps shall be directly above the green push button and green lamp shall be directly above the red push button.

12.11 MINIATURE CIRCUIT BREAKERS (MCB)

1.0	Type	Heat resistant plastic moulded type.

© 2022 MECON Limited All rights reserved

2.0	Number of Poles	Double Pole (DP).
3.0	Ref . Standard	IS: 8828 –1978.
4.0	Protections	MCBs shall be provided with quick break trip-free mechanism and direct acting thermal overload and short circuit trip elements.
5.0	Short circuit capacity	Not less than 9kA at 0.8pf
6.0	Mounting	DIN Channel mounting . Single phase MCBs mounted adjacent to each other and connected to different phases shall be provided with adequate insulated phase barriers.
7	Current Rating	The MCBs shall be selected from standard current ratings.(As per SLD) MCB characteristics curve shall be as per application.

12.12 SELECTOR SWITCHES

1.0	Basic details	- Shall have modular construction with number of switching contacts for each position operated by a single shaft. - Inscription for each position shall be provided. - Stay-put or spring return arrangementshall be provided as per the circuit and control/operational requirement. - The contacts shall be designed for higher contact reliability and electronics compatibility involving low voltage and small value of currents. - The operating handle shall be robust and strong. - One number of potential free switching contact for each position shall be provided as spare. - Control switches for circuit breaker ON/OFF control 3 position spring return to neutral with lost motion device and pistol grip handle. - Other control and selector switches - stay put type with wing type knobs.
2.0	Contacts	2 NO + 2 NC contacts with minimum rating of; - All the selector switches shall be of 10 A rating. - 25A for sturdy applications. - 1 NO & 1 NC contact / poles shall be potential free for PLC inputs.

© 2022 MECON Limited All rights reserved

13.0 AUTOMATION SYSTEM

13.1General

A. Automation System Architecture		
1.0	System Configuration&Architecture	Refer Automation Configuration diagram attached with TS.
2.0	Redundancy	- Dual redundant CPU with hot standby mode. - Dual redundant communication bus at all levels including the communication bus up to RI/O. - Dual redundant communication cards / interface module for the communication bus and remote I/O. - Two numbers of servers shall be provided with hot redundant mode (in case of client server specified in TS). - Power supply redundancy.
3.0	Speed of communication interface	- Minimum 5 MBPS or better upto RI/O level. - 100/1000 MBPS or better between PLC to PLC to Server to operator stations.
B. Operational Features of Automation system		
1.0	Operational facilities in HMI	The Graphic interface to the operator shall have the following minimum features with user friendly navigation keys. - It shall be possible to display dynamic graphic of different section of plant on the CRT & large display system. - Graphic displays shall be field configurable only through engineering key-board with standard / user defined graphic symbols. - Different plant sections dynamics shall be displayed on different pages. - Graphic display shall be interactive type through which it shall be possible to control process. Following process control functions shall be initiated via the HMI:- - Operation mode (Auto/ Remote/ Manual) selection as per applicable control philosophy - Control mode (Auto/ Semi-Auto/ Local) selection as per applicable control philosophy.

© 2022 MECON Limited All rights reserved

		- Selection of drive and control loops. - Set point selection. - It shall also be possible to send motor start/ stop and shutdown, valve open/ close command, control mode selection command from this display. - It shall be possible to go from any graphic page to related graphic page or any group view or alarm summary in single keystroke using soft key function. - Process diagnostic system to provide status & fault signals of the process along with process error displays. - The details of graphic screens shall be finalised as required during commissioning.
2.0	Screen menu display in HMI	- Over view - Group display - Loop display - Mimic display (dynamic) - Alarm over view - Alarm & Fault display - Trend display (Dynamic display) - Event displays(Dynamic display) - Diagnostic & maintenance displays
3.0	Process graphic display operation	- Critical plant status shall be highlighted by different colours or by blinking. Description in clear text shall be provided to simplify Operator understanding. - Double clicking on any of the Equipment in any of the menu / submenu pages shall invoke the corresponding PID loop display screen with real time trend. PID loop display screen shall show controller facia and displaying status and parameters of each controller. Each facia shall be able to display process value, set value and the manipulated variable. The remote manual functions and change of set points under auto mode shall be possible to be performed from these facias. - Clicking on any mechanism (like fan / pumps) shall invoke a small screen showing following (software LED) indications for remote manual operation: • Local • Remote • Auto

© 2022 MECON Limited All rights reserved

		• Run Feed-back • Elect. Fault • Emergency Stop • Power & Control ON - Clicking on any mechanism (like valve) shall invoke a small screen showing following (software lamps) additional indications (in addition to as specified above for fans/pumps). • Open (Blinking with opening color during opening) • Closed (Blinking with closing color during closing) • Torque switch actuated • Valve Open Timer Time Out • Valve Close Timer Time Out Similarly in case of conveyors the status of pull cord switches, Belt sway switches, ZSS etc shall be available Additional indications as per requirements shall also be provided as per discussion during detail engineering.
4.0	Colour Codes	- The display of the process shall occur on full graphic color process terminals. - color of the Process line &equipment& their statuses to be depicted in graphic display sheets shall be as per the relevant Indian/ International standards. - However all Equipment color shall be **RED** in ON condition, color shall be **GREEN** in OFF condition and valves shall be **PINK** (with blinking) in the intermediateposition. - Colour codes for other statuses of equipment shall be as finalized during detail engineering.
5.0	Trending	In any menu/ sub menu page double clicking on any tag shall invoke the trend menu of that particular tag. Based on the selection by the Operator either Historical or Real Time Trend menu shall be displayed. Provision shall be there so that Operator can add trends by entering the tag nos. , for another 7 nos. of tags in the same page ,using the same time base for comparison purpose. The Automation system must support historical process information recording and retrieval. This historical information shall be available for use in logs, trends, etc, requested at any operator console. Recorded process information shall include: • Measured value

© 2022 MECON Limited All rights reserved

		• Alarm status • Setpoint or desired value • Output value • Control mode A distributed approach to historical recording is preferred to a dedicated unit. For both logging and historical trending the operator/ engineer must be able to specify the points to be recorded, the frequency with which the data is to be collected and the time base. Historical data should support the following protocols: • OPC (Open Process Control) • OLE (Object Linking and Embedding) • OBDC (Open data base connectivity) • API (Application Programming Interface) Sufficient online storage shall be included to accommodate the data base and alarm, event and historic data logs for monitoring 75% of analogue data for 24 hours at 10 sec. Trend rate. Display of trend shall have; • Operator scalable X-axis from 60 seconds to 24 hours (for 24 hours history, trend shall be stored as 10 seconds scan for each variable) • Operator scalable X-axis from 8 hours to one month (for one month history, trend shall be stored as 10 minutes average value for each variable).
6.0	Safety & Hardwired Interlocking	The interlock scheme shall be as per the technological requirement based on process flow diagram , P&I diagram and functional chart . - All emergency conditions & safety interlocks (like Emergency stop, torque switches , Low low level switches for dry running etc.) shall be interlocked to the main power contactors of the drives. - Further for all mobile equipment (including conveyors) the PLC system shall provide with pre-starting audio warning alarm at equipment platform.
7.0	Alarms and alarm management	- The use of multi-media system in HMI shall be envisaged for audio-visual signaling for faults & alarms. - There shall be dedicated key as a provision for acknowledging the faults. The usability of the operator interface shall be further enhanced with features such as sound cards, touch screen, track

© 2022 MECON Limited All rights reserved

		balls etc. - Alarm list / event list and operator action list and its logging for minimum one month. **<u>Alarm Performance</u>** Irrespective of Operator activity and choice of display, an alarm situation shall always have priority and shall be brought to the attention of the Operator, quickly and automatically. The display containing the alarm shall be selected by a single keystroke action. Alarms should automatically update in the event of an alarm operating i.e. it should not require operator intervention to update alarms either on process mimics or alarm summary format. Alarm messages shall be time tagged to within 100 milliseconds (from detection at input card or receipt from data link) or less and are required to be displayed within two seconds of the field device operating. System resolution for the orderly detection of successive alarms shall enable those alarms to be displayed in order of occurrence, and/or priority. In order to facilitate easy recognition of alarm status by operators, annunciator colours and audio tones shall be easily distinguishable. All alarms and trips shall be annunciated by a screen message and an audible alarm. Critical process alarms shall come in the form of small size popup window on the HMI screen . Individual area wise alarm shall display in the corresponding HMI station. The alarms and trips shall flash in a highlighted form (e.g. reverse video) until acknowledged. When acknowledged from any HMI, the flashing and audible tone shall stop on all HMIs. When an alarm returns to normal, flashing shall return to normal on all HMIs provided the alarm has been acknowledged. **<u>Alarm Category Colours</u>** The following colours shall be used for the process control system screen alarms, on a black of gray background: • Fire & Gas Red • ESD Magenta • Fault alarm White • Process alarm Orange These are proprietary colours and shall be confirmed during detailed engineering. The use of yellow colour (traditionally a gas alarm) and green colour (associated

© 2022 MECON Limited All rights reserved

with normal conditions) shall be avoided for alarms.

Audible Alarm Category

There shall be audible differentiation between the fire and gas alarms (noise X), and process alarms and faults (noise Y and Z), where X, Y and Z noises have to be defined.

Analogue Alarms

All process variables and composed points shall have the possibility of being assigned at least two levels of high and two levels of low alarm values. All control loops shall have the possibility of being assigned high and low deviation alarm values. All alarms shall have a user-definable dead band. An alarm shall be provided when analogue signals are less than 3.8 mA or greater than 20.2 mA. Rate of change alarms and set point deviation alarms shall be provided.

The system shall be engineered such that it is anticipated that at least 4 levels of alarm priority shall be used:

- Low
- Medium
- High
- Critical

According to guidelines, which shall be developed in detail engineering, the Alarm/ event logging facilities shall be provided using Automation System based logging rather than printers.

Discrete Alarms

All discrete inputs shall have the possibility of being assigned a change of state alarm. Discrepancy alarm indicating failure of control action shall be provided.

Alarm Analysis

It shall be possible to inhibit alarms by point of priority when the initiating device is faulty or being maintained. While inhibited, the point must still be scanned and archived. The removal of the inhibit shall be logged. A summary display containing all inhibited points shall be provided on demand. Alarm inhibition shall be permitted from any of the work stations with level 3 or 4 access level only. Facilities shall be provided to mask out alarms from equipment (such as pumps) that is shutdown. These alarms shall be automatically or manually via keyboard, reinstated when the equipment is put back into service. Initiation and removal of inhibition shall be logged as an event and printed.

© 2022 MECON Limited All rights reserved

		Alarm Display Alarm displays shall take the form of a summary display of all points in alarm, and/or integrate the alarm message with associated item, group or overview data. Alarms shall be listed in order of occurrence, and for specific alarm displays the most recent alarm shall be shown at the top of the display. All alarms shall be identified by tag, description and the date and time of the occurrence, in hours, minutes and seconds. A banner type display showing a summary of alarms shall always be present at the top of the screen irrespective of main display. **Alarm Grouping and Priority** Alarms from an area shall be capable of being grouped in one or more Alarm Groups. A minimum of 30 Alarm Groups shall be provided. At least four levels of alarm priority shall be available, with configurable presentation/ background colour. A global alarm acknowledge and reset facility shall be available. If unacknowledged, Alarm message stays on display until it is cleared. **Diagnostic Alarms** The Automation System shall have a comprehensive self-diagnostic alarm information shall identify the faulty device down to board level, with its location and provide a diagnostic code. Individual circuit boards shall be provided with LED indicators or equivalent, to positively identify a faulty board. The failure of any single item of equipment shall not generate erroneous alarms. **Alarm Handling Capacity** In addition to the alarms included in the point count, the Automation System shall be capable of handling alarms and status points received via any data link to which it is connected. **Alarm Flooding** The Tenderer shall outline his approach, to over come the problem of alarm flooding.
8.0	Reporting and data logging	- Summary of faults with description, date and time of occurrence . - Shift wise, daily, monthly, yearly report with process values / production figures and other process data. However, same shall be finalised by the Purchaser during detailed engineering process. - Logging & reports of events - Historical data storage & trending.
9.0	Special Requirement	- For Instrumentation system a separate dedicated PLC/ DCS shall be provided (as mentioned in

© 2022 MECON Limited All rights reserved

		configuration diagram). - If the PLC is common (for both electrical & instrumentation) for the process then a separate dedicated remote I/O panel shall be provided for the instrumentation system.

13.2 PROGRAMMABLE LOGIC CONTROLLER (PLC)

1.00	**Power supply system**	
1.01	Power supply system	PLC system shall have two independent Input power supplies as described below :- 1) Two source of 240/110V AC single phase, 50 Hz from UPSDB for CPU and each RI/O panel. 2) Two source of 240/110V AC single phase, 50 Hz from UPSDB for control room equipment like PCs, printers and other automation equipment. 3) Power supply unit for different types of cards **as described below shall have 100 % redundancy.** & both power supply units shall have autochangeover facility . 4) Power supply unit shall be of regulated power supply to generate required AC or DC voltages 5) Separate power supply unit shall be provided for Input interrogation voltage / power supply for all types of inputs & outputs. 6) For CPUs and remote I/O racks, separate rack mounted power supply unit shall be provided. 7) DP MCBs shall be used for protection of power supply system. Separate DP MCBs shall be used at the incoming power & separate DP MCB for input power supply to each card/hardware. 8) Separate power supply with suitable DP MCB shall be provided for power supply of solenoid valves, if directly fed from PLC. 9) DP MCBs shall be used for protection of power supply system. 10) Separate power supply with suitable DP MCB shall be provided for power supply of any field instrument/devices, which shall be finalized during engineering as per requirements. 11) 20% spare DP MCB shall be provided in each panel.
1.02	Built-in power supply units	Following features shall be provided in the power supply unit mentioned above.

© 2022 MECON Limited All rights reserved

		- Insulation level 2.5 KV for 1 minute. - Protection against surge protection & short circuit - Electronic over current protection with feedback feature. - Thermostat protection against over temperature. - Over voltage protection . - DP MCB protection in the input and output circuit.
2.0	Central processor unit	- Modular and plug-in type - Minimum 32 bit microprocessor based. - PLC shall be able to scan and execute all close loops (approx. 40 PID loops) in less than 100 milliseconds and scan digital inputs in 50 milliseconds simultaneously. - Execution time between 2 milliseconds to 5 milliseconds per 1K instruction or better. - Provision to latch desired outputs. - Provided with redundant hot standby CPU (with appropriate communication module). - The CPU system shall have facility of bumpless transfer in case of failure of one. - CPU shall have crystal clock generator. - Peer to peer communication through I/O channels shall be possible. - Backup system communication (redundant communication bus) shall be provided. - The processor shall have proper communication modules (for each CPU) for communicating with redundant processor, remote I/O modules and for communicating with other communication bus protocols like ethernet bus/ profibus/ modbus/ controlnet/ field foundation bus etc. - The processor shall have in-built provision for software timers, counters, examining input conditions, compare, compute, logical, conversion from/ to BCD, bit manipulation, block memory manipulation, diagnostic, shift, sequencing, conditional jumping, subroutine instructions etc. - CPU shall be capable of handling PID functions including mathematical functions ,weighing and batching functions. - CPU shall be capable of handling 30 % additional (future) I/Os over and above 20 % spares (installed) I/Os indicated in basic configuration diagram.

© 2022 MECON Limited All rights reserved

		Maximum CPU loading shall be limited to 60 % for the intended applications. - The CPU shall have the facility of generating a synchronizing pulse to the server periodically (Minimum once in a day).
3.0	Timers	The timers shall be OFF delay, ON delay ,retentive type timer with a range from few millisecond to few hours. Accuracy shall be +/- 0.1% of the set value .
4.0	Counters	The counters shall be of counter up and counter down type. It shall have the range from 0000-9999.
5.0	Memory units	- Modular and plug-in type - Word length 32 bit (Minimum) - Expandable in blocks of 4K Words - Minimum size 20MB . - EPROM/ RAM with battery back-up - Back-up battery shall be as follows:- • Rechargeable Ni-Cd batteries with necessary charging circuit/ Lithium or any other internationally acceptable type. • Able to retain memory for a minimum of 1 year with no power applied to the controller.
6.0	Input Units	- High density, modular. - Insulation level of 500 / 1500 V AC/DC - Input interrogation voltage 24 V DC. - Individual DP MCB shall be provided in power supply for each card. - Cards shall have diagnostic features. - Cards shall have Hot swapping features.
6.1	Digital Input Modules	Digital input units shall have the following features • 16 / 32 inputs per module. • Time delay of about 10 millisecond to filter out noise and contact bounce. • Each input channel shall be isolated from other. • LED status indication. • BCD input units suitable for four digit input. • Pulse inputs (Incremental encoder / digital tacho).

© 2022 MECON Limited All rights reserved

		• Absolute / incremental encoder inputs.
6.2	Analog input Modules	Analog input units shall have the following features: • Shall be 4 / 8 channels, rack based & plug–in type. • Suitable for 4-20 mA / 0-10V DC / RTD / thermocouple / weighing signal inputs. • With necessary A/D converter having at least 12 / 14 bit resolution based on application. • Suitable for J/K/S type thermocouples & for PT100, 2- wire / 3 wire. • Each channel shall be isolated from other. • For 4 – 20 mA analog inputs, fused T.B with blowing fuse shall be provided. • Healthiness of every input shall be monitored & LED indication shall be provided. • Analog module shall have the facility to be configured in voltage or current mode and differential or single ended inputs mode . • All the cards shall be compatible of receiving analog signals from field sensors and switches directly. If not suitable converters shall be provided.
7.0	Output units	- High density, modular. - Insulation level of 500 / 1500 V AC/DC. - Individual DP MCB shall be provided in power supply for each card. - Cards shall have diagnostic features. - Cards shall have hot swapping features.
7.1	Digital Output modules	Digital output units shall have the following features: • 16 / 32 digital outputs per module. • High Density modular and plug-in type. • Each out put shall be isolated with two separate terminals for each outputs. • Rated for 24 V DC. • The output module shall be able to drive interposing relays (24V DC coil) with 2 NO+2NC, solenoids, annunciation lamps, LEDs, Instrumentation control equipment etc. • Power devices like contactors etc. shall be actuated through interposing relays (2 NO+2 NC). The interposing relays shall be mounted in the same

© 2022 MECON Limited All rights reserved

		panel. Proper surge suppressor shall be mounted across the coil of the output relays. • Any special requirement e.g position control to control field devices shall be met by using separate interface modules. - BCD output units shall be as follows: - • Suitable for four-digit output. • Rated to drive seven segment LED displays
7.2	Analog output modules	Analog outputs shall have the following features: • Shall be of 4 / 8 analog output channels. • Suitable for 4-20 mA / 0-10V DC / +/-10V DC outputs. • With necessary D/A converters having 12 bit resolution. • Each output shall be isolated from other channel.
8.0	Foundation Field Bus Interface modules (FIM)	The features indicated below defines the general requirement of field foundation interface module. This shall be read in conjunction with requirements given if any under DCS/instrumentation part (GS-03 Part III); • The Foundation Field bus interface modules (FIM) of the PLCs shall be chasis based modules. These modules shall completely integrate Foundation Field bus devices with the PLC controller & HMI software. These FIM modules shall deliver system wide integration of data access, control, connections, diagnostics and alarms with the PLC system. LED indication of power, error condition & status shall be provided in each FIM module. • PLC shall provide graphical support to the Field Bus Interface module to perform the functions of Link Active bus scheduler for a network. This shall allow the system configuration engineer to see what's going on and shall provide complete flexibility to adjust schedules based upon the needs of the control scheme. PLC shall also support Back-up Link active scheduler. • All Foundation Field bus (FF) devices (to be procured under separate Instrumentation package) shall be registered with the Field bus Foundation at level ITK 4.0 or higher. Field bus interface modules & Field Bus Library manager shall be compatible with ITK 4.0 or higher version compliant devices. Tenderer shall also provide Field bus usage license. All FF devices provided shall be polarity insensitive. All FF cables

© 2022 MECON Limited All rights reserved

		shall be of Type A. • The PLC offered shall be certified for the Foundation Field bus Host Inter operability Support Testing (HIST) from Foundation Field bus organisation. HIST procedures provide a common methodology for assessing host inter-operability with registered devices. • PLC Software shall have the capability either to directly read Device description (DD), files from the Field bus devices and add these DDs/ Files to the library for Off-line & On-line configuration, or it shall perform this task through a separate software tool, Field bus library manager. It shall be possible for PLC based automation system to upload field device configuration changes implemented in the field. Once the configuration information is stored in the automation system, it shall be possible to download it to any other similar device, whether a new or replacement device. • In case of a new device added to a Foundation Field bus segment, its presence shall be immediately shown in that segment. Important information about the new device including tag name, address, model and revision shall be immediately available. • Downloading new software to Foundation Field bus devices shall be possible from the PLC. There shall be no need to physically change the firmware and to disconnect or remove devices for updating to the latest available revision. It shall be possible to simultaneously download the latest firmware to multiple field devices. • Each Foundation Field Bus interface module shall support minimum two segments. • The Terminators shall be impedance matching modules to be used at or near each end of a segment. There shall be two terminators per segment. The terminators prevent distortion and signal loss and shall be supplied as a pre-assembled, sealed module. Tenderer shall provide the Terminators as per the requirement. • The power for each Foundation Field bus segment shall be provided through a power conditioner to prevent the communication signal from being attenuated by the power supply & to eliminate cross talk between FF segments through a common power supply. • Power supply modules to be supplied by the Tenderer shall be of Type 132: Non-I.S. power supply

© 2022 MECON Limited All rights reserved

		intended for feeding a non-I.S. barrier. Output voltage shall be 32 V DC maximum. • For Field bus use, a power supply impedance matching network shall be provided. This shall be a resistive/ inductive network and built into the Field bus power supply module. • Connectors as coupling devices shall be employed to connect the wire medium to a field bus device or to another section of wire. Standard field bus connectors shall be used. Specification shall be as per annexure A of the ISA physical layer standard and annexure A of the IEC physical layer standard. • Couplers shall be the physical interface between segment and spur or segment and Field bus device. Field bus couplers shall be as specified in the IEC/ ISA physical layer standard and provide one or several points of connection to a field bus segment. • Grounding: The instrument signal conductors shall not be used as a ground. Instrument safety ground shall be made through a separate conductor outside of the signal cable. The conductor may be in the same cable as the instrument signal conductors and shield, but shall be located outside the shield within this cable. Field bus devices shall not connect either conductor of the twisted pair to ground at any point in the network. The Field bus signals are applied & preserved differentially throughout the network. Network cable shield shall be earthed/ grounded in one location only, at the field termination assembly (Host) end. At any field instrument, cable shield shall not be connected to the instrument earth/ ground or chassis. The cable shields from different networks shall not be attached together in a field junction box. This shall create ground loop & noise onto the network. • Lightning/ Surge protection: Surge protection shall be provided for all field devices. The surge protection shall consist of low capacitance silicon avalanche diodes or spark gaps, wired for both normal & common mode protection and connected to the electrical safety ground grid. Surge suppressors shall be so selected that they shall not measurably attenuate the FF signal. To avoid any chance of short circuit, surge suppression devices shall be connected through a series fuse. Foundation Field bus Network/ segment naming convention The following recommended network/ segment naming convention shall be followed:

© 2022 MECON Limited All rights reserved

		# NN MM P • #: Indicates the plant/area number to which the segment shall be connected. • NN: Indicates the node number / controller name. • MM: Indicates model number/ card number. • P: Indicates segment or port number. Loop & Instrument Naming convention :- Loop & Instrument naming convention shall be decided during detail engineering. Spur Naming convention:- All spurs shall be labeled with Instrument tag name.
9.0	Additional features	- On-line replacement of any module shall be possible in such a way that the removal and addition of any module shall be possible without de-energizing the system. Further there shall not be any interruption in the system while replacing a faulty module except for the inputs / outputs which are being handled by the module. - Field wiring shall be carried out using 1.5 sq mm copper cables. - The PLC system shall be immune to the following: • Radio frequency interference • Electromagnetic interference • Power system spikes
10.0	Mounted spares	Refer design Basis in Part - A.
11.0	Self diagnostic features	- Parity errors, cycle errors and under voltage - Failure in central processor unit, memory and power supply. - Indication of type of failure. - Automatic turning OFF of all outputs or optionally holding of all outputs in their last state on failure detection. - Fault detection upto card level. - Communication failures – all types - Fuse failure indication for outputs
12.0	Monitoring functions	- Monitoring of internal voltages - CPU Status monitoring

© 2022 MECON Limited All rights reserved

		- Memory status monitoring - I/O Status monitoring - Address monitoring - Bus & communication signal monitoring - Broken sensor detection
13.0	Terminations	- All inputs and output wired up to easily accessible terminal blocks rated for 1100V of min 1 sq mm. - Screened cables for all analogue signals. - TB shall be suitable for terminating up to 1.5sq. mm. copper conductor industrial control cables. - Fuse terminals **with LED indications for all input & output** signals. - Input and Output terminals shall be colour coded i.e. separate colors shall be used for terminals of Inputs & Outputs.
14.0	Earthing	- Separate earthing bus for power / panel earthing and electronic earthing shall be provided. Minimum two numbers of electronic earth pits shall be provided for each set of PLC. - Electronic earthing bus shall be suitably insulated. Earthing requirements / earthing schemes for the equipment supplied shall be clearly indicated in appropriate drawings.
15.0	Constructional features	- Unitised construction. - Floor mounted, free standing and indoor type. - Bottom cable entry through gland plate. - Sheet steel clad. - Dust and vermin proof. - Anti vibration pads to be provided to withstand vibrations as per application. - Panel illumination with door interlock limit switch. - Switch-socket outlet for maintenance. - Suitable fans & inlet air filters shall be provided at the bottom/ top of each panel for proper air circulation. - Empty slots of the racks shall be provided with dummy cards for protection against dust & damage.
16.0	Enclosure	- Conforming to IP-42 class in MCC room/control room. - Conforming to IP-54 class for remote I/O cubicles

© 2022 MECON Limited All rights reserved

		located in shops/ bays. - Programmable controllers & RI/O panels, even if housed in air-conditioned enclosure, shall be suitable for normal industrial environment and ambient temperature upto 50°C. - Temperature while operating • Lower limit : 0 degree C • Upper limit : 60 degree C - Temperature while not operating (storage) • Lower limit : 20 degree C • Upper limit : 75 degree C - Relative humidity • Daily average 80 to 90% (8 hrs.) and 65 to 90% (16 hrs.) • Maximum 98%, not occurring simultaneously with maximum temperature.

13.3 HUMAN MACHINE INTERFACE (HMI) WORK STATION & ENGINEERING STATION

1.0	Type	- Shall be TFT monitor PC based colour graphic Work Station. - Commercial grade latest available in the market. (Industrial grade latest available in the market to be used for installations in the plant bay e.g. on casting platform in MOP).
2.0	Interfacing card / module required	Proper interfacing card / module with related communication protocol shall be installed in the programming unit so that it can communicate with the network (i.e PLC processor, server, HMI, printers) smoothly
3.0	ProgrammingFacilities	- Programming unit shall be suitable for developing programs in ladder diagram/ block diagram/ statement form/ SFC. - Programming unit shall have facility for loading the program from CD & DVD .& Pen drives. - The programming terminal shall be capable of developing multiple programs offline without connecting to the programmable controller. Upload and download of the program between PLC and program unit shall not require 'compile' before 'download'.

© 2022 MECON Limited All rights reserved

4.0	System Configuration	- Minimum 22 LED color monitor with fast response time, high contrast ratio and minimum resolution of 1680X1050 - Dual Ethernet interface with LAN accessories for all PC based operator station. - 64 bit, minimum 4 GB RAM (shall be expandible), minimum 1000 GB Hard Disc drive & controller. - Combo Drive, Graphics Accelerator Card with minimum 4GB graphics memory, Keyboards, Optical mouse. - The computers shall be provided with standard I/O ports with minimumnos of 2 serial ports, one parallel port, minimum 6 nos USB ports, ethernet interface with accessories.
5.0	Functions	- Error detection and reporting. - Fail safe / broken sensor information and alarm and their reset. - Selection of highest / lowest signal from a group of accepted inputs and displaying the same. - Linearisation and other arithmetic calculation. Provision shall be kept for pressure and temperature correction to be computed for flow measuring loops. - Built-in ambient temperature compensation for thermocouple inputs from field. - Trending real time and historical (Trending shall be provided for all analog inputs). - Report generation and periodic logging. - Developing of graphic symbol library as per ISA – 5.1 and 5.3. in addition to standard industrial symbols. - Printing of alarm conditions with parameter identification. - Online editing of:- • Scan sequence • Identification number • Engineering units • High and low alarm limits • Alarm dead bands • Addition / Deletion signals

© 2022 MECON Limited All rights reserved

		• Removal / introduction of analog and digital points in scanning.
6.0	Miscellaneous	- Networking via Ethernet with Network diagnostic displays. - Ability to add optional packages (e.g. for data analysis).
7.0	Printer	Latest appropriate model of ColourLaserjet Printer to get hard copy of the program dump / data logging / alarm logging / event logging / data trending etc.

13.4 SERVER

1.0	System Configuration	- Industrial grade . - Server grade Intel Xeon, Dual CPU (minimum 3.06 GHz) - Redundant power supply - Minimum 2X6 MB L2 Cache memory. - Minimum 8 GB RAM.(shall be expandible) - Minimum 2 X 500 GB Hot swap SCSI HDD (RAID level-1 Disc mirroring) - Combo drive - 2 Serial ports, 1 parallel port, 6 USB ports (for all client as well server). - Graphic accelerator card with minimum 512 MB graphics memory - Dual Network interface. - Minimum 22” TFTcolour monitor - Keyboard and optical Mouse. - Operating system Windows 2008 SERVER /latest validated version
2.0	Make	Servers shall be of COMPAQ/ DELL/ IBM make.

13.5 SOFTWARE

1.0	**PLCS System software (Windows Programming)**	The PLC programming software shall be latest, Windows based, menu driven and shall support the following minimum: - - Cyclic, Time Controlled, Interrupt controls. - Retentive/ Non Retentive Timers, Bi- Directional counters, latches etc. - Internal Flag generated by the PLC.

© 2022 MECON Limited All rights reserved

		- All Boolean Logic Functions - Data Transfer, Block Transfer - Sub Routines - Arithmetic functions & formula Calculations - Communication functions with Remote I/O as well as Work stations - Closed loop PID control functions including nested and cascaded loops. - Output of PID controllers shall be 4-20 mA DC. - Control valve position (in 4 – 20 mA) shall be made available in PLC. - PID Controller shall have auto tuning facility - Totalisation of flow inputs. - Linearisation function blocks and other useful function libraries. - Linearisation function block shall be such that a table of values (X against Y) can be entered in a menu driven manner and for any particular field input X, the value of Y can be calculated using the values of table by interpolation method. Maximum 30 point linearisation function block shall be considered. Below 30, point of linearisation shall be user selectable. - Built-in ambient temperature compensation for thermocouple inputs from field. - Broken sensor detection etc. - Simulation facility / software shall be supplied for programme testing without disturbing the working PLC . - Minimum no. of PID Control Loops: 40. - The complete PID blocks shall be transferred to HMI work station in place of split bits . The Software shall be suitable for PC based Programming Unit .
2.0	**Application Programme software**	- Shall be as per process control requirement. - The application program software shall be written in Ladder logic / block diagrams / statement form. - Online program editing facility shall be available.
3.0	**HMI software**	- Window based, latest version (at the time of implementation) of HMI software. - HMI software package shall have the facility to perform multitasking, data acquisition, supervisory control,

© 2022 MECON Limited All rights reserved

		monitoring, control development and routine software. - HMI software shall also have the features for alarming, trending, data logging, production backup history, operator action list , creation of shift reports after every shift, online printing of events. - Number of graphic pages shall not be a limit . - HMI software shall have the facility of handling at least 32,000 tags (Digital as well as analog). - HMI software shall be capable of curve fitting, co-relation & regression functions. - In the engineering workstation & servers, development version of HMI software &Foundation Field bus system software (licensed versions) shall be provided. - In the operator workstations, runtime version of HMI software & Foundation field bus system software (licensed versions) shall be provided.
4.0	**Database Software**	ORACLE & DEVELOPER 2000 / As required & supported by the system offered.
5.0	**Operating System**	WINDOWS 2008 SERVER /latest validated version

13.6 LARGE SCREEN DISPLAY SYSTEM :-

Large screen display screen system shall be provided in the control room of the plant. The display system shall have linear setup in the control room.

The display system shall consist of a matrix of rear projection modules for high overall resolution, a controller unit based on either MS-Windows or Linux, and optional wall management software. Rear projection modules shall have DLP (Digital Light Processing) technology.

The system shall have following features :-

- High resolution to show large applications with several video or RGB sources.
- The system shall not be susceptible to environmental factors like heat, humidity, or vibration, which can cause an image to degrade over time The system shall be zero hassle and minimal maintenance. All components are carefully chosen to provide high mean time between failure and minimal mean time to repair.
- The system shall have excellent module to module color uniformity.
- The system shall have high contrast image.
- Modular Design

The system shall be able to deliver a highly reliable and superior quality image display to the operator. The displays can be seamlessly integrated into any center. The modular concept shall also be applied within each module. System shall have separate fan- module, projection unit and illumination unit so that maintenance from the rear of the system is very easy. Filter and lamps can be replaced from the outside.

© 2022 MECON Limited All rights reserved

- Image optimization
- Builtin redundancy with hot standby configuration
- On screen menus

Size of the display system shall be 5m (length) x 3 m (width) . Distance from the screen to operator shall be minimum 5 metres . The cube configuration shall be considered based on the above size of the screen . The display unit shall have following features :

- Full viewing angle : 180 degrees .
- Half gain angle(Horz. / vertical) : 35 deg. / 35 deg.
- Seam size screen : less than 0.2 mm
- Aspect ratio : 4 : 3

Operating condition :

- Humidity : upto 90 % non condensing
- Temperature : upto 50 deg. C.
- Optical dimming with dynamic feedback : Yes
- Power supply :- 240/110 V AC , 50 Hz.
- EBU Colour triangle
- Inputs : Shall have all options of multi input module: DVI-D, DVI-I, Multi Sync RGB input (VGA upto UXGA), Video Input (PAL, NTSC, SECAM)

Projection unit shall have : -

- Single chip DLP technology .
- High resolution
- High contrast .
- Egronomic luminance
- Integrated optical dimmer

14.0 UNINTERRUPTED POWER SUPPLY

1.0	Basic particulars for design:-	
(i)	Input Voltage	415 V AC +10% /- 15% , 3-Phase,4 wire, grounded neutral system with a symmetrical fault level of 50 KA RMS. For ratings of UPS, upto 5KVA the input voltage of 240 V AC, 1-Phase supply is also acceptable.
(ii)	Input Frequency	50 Hz. +/- 5%. (In design it is +/-3%)
(iii)	Output Voltage	240/110 V AC, 1-Phase

© 2022 MECON Limited All rights reserved

		(**For Mining areas & Beneficiation/any Process Plant at Mining area**) UPS output voltage shall be 110V AC.
(iv)	Output Voltage tolerance	+/- 1%
(v)	Output Frequency	50 Hz. +/- 0.1%-0.5%.
(vi)	Output Voltage wave form	Sine wave
(vii)	Harmonic Distortion	Less than 2% for linear loads. Less than 3% for Non linear loads (individual). Less than 5% for total harmonics distortion.
(viii)	Voltage Distortion	Less than 3% for 100% linear loads. Less than 5% for nonlinear loads.
(ix)	Phase Displacement	120 deg. +/- 1deg. for balanced load. 120 deg. +/- 3deg. for unbalanced load.
(x)	Transient recovery	Shall return to steady state condition in less than 100 msec. after a disturbance.
(xi)	Minimum ambient	50 deg.C.
2.0	**Basic details**	
(i)	Duty type	Online continuous.
(ii)	Reference standard	Features and performance in line with IEEE 446.
(iii)	Overload	125% of the rated output for minimum 10 minutes. 150% of the rated output for 60 sec.
(iv)	Configuration	With isolating transformer, rectifier, inverter unit, Bypass and necessary DC batteries.
(v)	Power device	Inverter power circuit shall comprise of IGBT using PWM control technique.
(vi)	Redundancy	The system shall be of parallel redundant type with bump less transfers.
(vii)	Static bypass	Automatic static bypass and individual DC battery. The load shall normally be fed from the inverter. In addition to static bypass switch, a manual changeover switch of adequate rating shall be provided to supply the load directly (bypassing the

© 2022 MECON Limited All rights reserved

		rectifier/charger, inverter, and static transfer switch) from the mains instead of through the UPS system. The bypass circuit shall be through Constant Voltage Transformer of adequate rating (at least 125% of UPS KVA rating).
(viii)	Battery bank	Battery shall be SMF type, either Lead acid type or Ni-Cad or Gel VRLA type. Separate Battery bank shall be provided for each UPS.Rating of each battery bank shall be 100%. The batteries shall be housed in a separate battery cabinet/Racks&located in air conditioned room/Glass enclosure not very far from UPS panel. Battery cells shall preferably be mounted on slide-out trays for ease of maintenance. A battery disconnect circuit breaker with undervoltage release (UVR) shall be included for isolation of the battery pack from the UPS module. The UPS shall automatically be disconnected from the battery by opening the breaker when the battery reaches the minimum discharge voltage level. Casters and leveling feet shall also be provided with the battery power pack cabinet for ease of installation.
(ix)	Battery backup	Each Battery shall be suitable to maintain the power supply for at least 30 minutes in the event of mains failure with rated capacity of the UPS at full load.
(x)	Battery management system	UPS shall have latest 'Battery Management System' to charge / discharge the entire battery automatically.
(xi)	AC DB	Necessary distribution board for distribution of power from UPS output to individual consumers. Incomer of ACDB shall be MCCB. Out going feeders of ACDBs shall be DP MCBs of adequate rating. Incomer side shall be provided with Voltmeter, ammeter, indication lamps for power ON/OFF/TRIP.
(xii)	Loading capability	UPS shall be capable of taking 100 % non linear loads.
(xiii)	Interchangeability of sub assemblies	The UPS shall be constructed of replaceable subassemblies. PCB's shall be plug-in type. Like assemblies and like components shall be interchangeable.
(xiv)	Noise level	Maximum noise level shall be less than 60 dB at a distance of 1 m from the body of the UPS.
(xv)	Efficiency	The efficiency values of UPS under 50% unbalanced load & 100 % linear loads shall be as near as possible

© 2022 MECON Limited All rights reserved

		to normal efficiency.
(xvi)	Isolation transformer	The isolation transformer shall be of dry type and shall be provided on both input and output side of the UPS.
(xvii)	Grounding	The AC output neutral shall be electrically isolated from the UPS chassis. The UPS chassis shall have an equipment ground terminal. Provisions for local bonding shall be provided. Component mounted doors shall be separately earthed through 2.5 sq.mm PVC insulated green/green-yellow color flexible copper wire.
(xviii)	Communication port	The UPS shall have inbuilt RS 485/serial communication port for display of online status of UPS on HMI.
3.0	**Rectifier**	• Rectifier unit shall be suitably designed, selected &rated for supplying both inverter load and battery charger load. Boosting device, Converters should not be used in between battery bank & DC Bus except isolating device. • Rectifier unit shall consist of minimum six pulse bridge connection.
4.0	**Protective features**	• Maximum current limiting. • Automatic reduction of current limit in the event of cooling fan failure. • Boost charging and float charging current limiting.
5.0	**Inverter**	• With input circuit consisting of battery contactor, battery filter and smoothing reactor. • DC/AC converter for voltage control. • Inverter proper and control electronics. • Series reactor and parallel filter. • Output transformer.
6.0	**Protection**	• Abnormal output voltage (over voltage & under voltage). • Abnormal link voltage. • Over current on output. • Over current on input or commutating failure. • Low battery voltage.

© 2022 MECON Limited All rights reserved

		• High transformer temperature. • Auxiliary supply failure. • Fan failure. • Logic failure. • Clock failure. • Fast acting HRC fuse for inverter circuit and control circuit. • Reverse power protection for parallel inverters.
7.0	**Static by-pass switch**	• Static switch automatically switches the load to the reserve power supply for the mains whenever there is failure in inverter supply to the load. • Fast acting inverter contactor shall connect the inverter output to the load. High speed fuses shall be provided for protecting the thyristor against accidental overload.
8.0	**Indicating meters on panel**	• Input voltmeter with selector switches • Input ammeter with selector switches. • DC voltmeter with selector switches • Centre zero type DC ammeter for measurement of charging/discharging current from the battery. • AC output voltmeter with selector switch. • Separate frequency meter to see Input and Output frequency. • AC output ammeter with selector switch. • AC voltmeter with selector switch for bypass circuit. • AC ammeter with selector switch for bypass circuit. • Frequency meter for bypass circuit.
9.0	**MIMIC on UPS panels**	• MIMIC of the system power flow diagram as single-line diagram of the UPS shall be provided on UPS panels front door with long-life LED's integrated within the single line diagram to indicate the operating status of different components/sections of the UPS.
10.0	**Display and Operating system**	• The UPS shall be provided with a microprocessor based keypad and display unit mounted on UPS panels front door for operating and viewing the UPS status for convenient and reliable user operation. • The monitoring functions such as metering, status

© 2022 MECON Limited All rights reserved

		and alarms shall be displayed on an alphanumeric LCD display. Additional features of the monitoring system shall include: • Menu-driven display with text format. • Real time clock (time and date). • Alarm history with time and date stamp (minimum upto 16 faults in memory with FIFO sequence). • Battery back-up memory.
11	**Metering**	The following parameters shall be displayed: • Input AC voltage line-to-line and line-to-neutral for each phase. • Input AC current for each phase. • Input frequency. • Battery voltage status. • Battery charge/discharge current. • Output AC voltage. • Output AC current. • Output frequency. • Percent of rated load being supplied by the UPS. • Battery time left during battery operation.
12	**Alarm Messages**	• Input power out of tolerance. • Input phase rotation incorrect. • Incorrect input frequency. • Charger in reduced current mode. • Battery charger problem. • Battery failed test. • Low battery voltage warning or blown battery fuse. • High battery voltage. • DC bus overvoltage. • Bypass frequency out of range. • Load transferred to bypass. • Excessive retransfers attempted. • Static switch failure.

© 2022 MECON Limited All rights reserved

		• UPS output not synchronized to input power. • Input power single phased. • Input voltage sensor failed. • Inverter leg overcurrent in X-phase. • Output undervoltage. • Output overvoltage. • Output overcurrent. • System output overloaded. • Load transferred to bypass due to overload. • Fan failure. • Overtemperature shutdown. • An audible alarm shall be provided and activated by any of the above alarm conditions.
13	**Status Messages**	• Normal operation • Load on maintenance bypass • Load on UPS • Load on static bypass • System shutdown • UPS on battery
14	**Controls**	• UPS start-up / shutdown shall be done by push button / rotary control switch. • Normal operation / bypass operations shall be done by a single rotary control switch. • An advisory display and menu-driven user prompts writeup sticker (pasted inside the panel door) shall be provided to guide the operator through system operation without the use of additional manuals. • Pushbuttons shall be provided to display the status of the UPS and to test and reset visual and audible alarms.
15.0	**Constructional features**	
(i)	**Isolation devices**	• MCCB (upto 630A),50KA fault level as incomers for each UPS &Bypass. • DP MCB (of adequate rating) in outgoing side. • Power circuit isolation device to have pad locking in the OFF position with the door closed.

© 2022 MECON Limited All rights reserved

(ii)	**Installation**	• Metal clad, indoor installation
(iii)	**Mounting**	• Floor mounting with base channel of ISMC-75.
(iv)	**Enclosure protection**	• Totally enclosed dust and vermin proof. • IP – 32.
(v)	**UPS housing**	• Each UPS system shall be housed in a separate cubicle, complete with an individual front and back access door with concealed type hinges. • For UPS panel all the switches, indication lamps and meters shall be flush mounted on the respective compartment door. • For ACDB panel the input MCCB's and output MCB's shall be operated from outside the panel door.
(vi)	**Back access**	• Each panel shall have a door on back side. All the doors shall have neosprene gasket. • Natural rubber gasket shall be provided between adjacent panel doors and removal covers.
(vii)	**Lifting hooks**	• Lifting hooks for each panel shall be provided
(viii)	**Designation plate for UPS**	Inscription plate for each panel:- • Name plate shall be provided at top centre of the UPS panel. • Name plates shall be of Anodised Aluminium with white letters engraved on black background and in English language. • Letter height for UPS designation plate shall be in the range of 25-50 mm. • Individual components shall be identified with identification plate and shall match with the identification tags mentioned in the drawing. • Danger board shall be provided on front and rear side of the UPS both in Hindi , English & regional languages.
(ix)	**Thickness of sheet steel (CRCA)**	• Load bearing members : 2.0 mm • Non load bearing member : 1.6 mm
(x)	**Door earthing**	• Hinged door at front and back with flexible earthing connection.
(xi)	**Cable entry**	• Incomer :- Bottom cable entry

© 2022 MECON Limited All rights reserved

		• Outgoing :- Bottom cable entry
(xii)	**Gland plates**	Undrilled removable bottom gland plates(3 mm thick).
(xiii)	**Cooling of panels**	• Panels shall have fan installed vertically at top for forced air draft and louvers with screen protection in bottom. • Fans shall be powered from UPS output. Low velocity fans shall be used to minimize audible noise output. • The UPS shall be installed in air conditioned environment.
(xiv)	**Bolts , nuts & cable glands**	• All bolts and nuts for terminations shall be cadmium coated. • Double compression cable glands for receiving external power & control cables.
(xv)	**Indicating lamps**	• All indicating lamps shall be of LED high density type.
(xvi)	**Finish**	• Exterior :- RAL 7035
(xvii)	**Terminal block**	• Terminal block for incoming cable shall be located in back side and outgoing cables shall be in front side of the ACDB panel. • All incoming terminal blocks shall be fully insulated for the working voltage. • The terminal blocks shall be sleeved color coded Red, Yellow , Blue , Black for R,Y,B,N respectively using heat shrinkable PVC sleeve. • All outgoing terminal blocks shall be sleeved color coded Red and Black for line and phase respectively using heat shrinkable PVC sleeve. • All the terminal blocks shall be shrouded. • Not more than two connections shall be made at one terminal. • Terminal blocks shall be suitable to connect two cores of 2.5 sq.mm. • There shall be 20% spare terminal blocks.
(xviii)	**Minimum air clearance for bare busbars .**	• Phase to phase :- 25.4 mm • Phase to earth :- 19.0 mm
(xix)	**Earth bus**	The main earth bus shall be of 50 x10 mm GI with extension at both ends of switchboard for connection to safety grounding network. Earth busbar shall run

© 2022 MECON Limited All rights reserved

		continuous throughout the UPS panel at bottom.
(xx)	**Panel internal wiring**	The panel internal wiring shall be carried out by 1100V grade, single core, black color PVC insulated , stranded copper wire of following size; • Current transformer circuit :- 4.0 sq.mm • Control and potential circuit :- 2.5 sq.mm • Identification of wire shall be numbered by plastic/ ceramic ferrules. • Ferrules shall be self locking type.
(xxi)	**Incoming Feeders**	• Each UPS shall be with separate incoming power supply from different sources. Bypass circuit shall be with separate power supply All incomers to be equipped with following:- • 3 pole MCCB. • Ammeter with 4-position selector switch (three phases & OFF). • Voltmeter with 4-position selector switch and fuses (three line-line & OFF). • Current transformers (for metering). • 3 nos. indicating LED type lamps (R,Y,B). • 3 nos. indicating LED type lamps (CB ON-Red, CB OFF- Green, CB TRIP - Amber) • Following protections are required for the MCCB controlled; • Incomers :- - Overcurrent releases. - Short circuit. - Earth fault.
(xxii)	**Outgoing Feeders**	• Each outgoing feeder shall have followings:- • Outgoing feeders shall have DP MCB. • MCB of 09 kA rating with Thermo-magnetic releases.
(xxiii)	**Testing**	• All routine tests shall be as per IS-8623 (Part-II) 1993. • Type test certificate shall be submitted for similar rated UPS.

© 2022 MECON Limited All rights reserved

15.0 ELECTRICS FOR CRANES AND HOISTS

15.1EOT CRANE

15.1.01 Standards:

Refer Design basis Part-A

15.1.02 Power supply and standard voltage levels for Cranes:

The following standardized voltage levels shall be adopted:

a)	LTAC	• For Cranes with incoming power requirement higher than 1000kVA / cranes of capacity 280T and above, the system voltage shall be: 690V, +10%/-10%,3 phase, 50 Hz +/-5%, 4 wire solidly earthed system The 4th wire being the earthed conductor. • For all other cranes and hoists: 415V +10%/-15%, 3 phase, 50 Hz+/-5%, 4 wire solidly earthed system. The 4th wire being the earthed conductor. • Other voltages required on the crane/hoist for any purpose shall be obtained by providing transformer/ transformer-rectifier unit with MPCB/ MCBs on both primary and secondary side respectively and ±5% to and ±10% taps on transformers secondary.
b)	AC control and signaling voltage	240V AC for cabin operated cranes 110V AC for class 2 underslung & pendant operated cranes For mining and associated areas the control supply shall be as per DGMS guidelines. The Control voltage shall be obtained through Control Transformer
c)	Illumination	240V, AC through lighting transformer of suitable rating
d)	For Voltage level of Socket outlets for Hand lamps, Hand tools, Electro-magnetic brakes, Monitoring & Signal etc. refer Design Basis (Part-A)	

During running condition voltage drop on crane shall be limited to 1%on crane and 3% in DSL system.Total voltage drop from LTPCC to motor terminals on Crane shall not exceed 6%.

© 2022 MECON Limited All rights reserved

The equipment selected shall be suitable for voltage and frequency variation as mentioned above and any combination of the above. However, drive system for high capacity crane e.g. ladle cranes shall be selected for voltage operating range of 70% to 110% of rated supply.

15.1.03 Maximum Demand of Crane and Current rating forDSL:

15.1.03.01 **Maximum Demand of Crane :**

The Maximum Demand of Crane shall be calculated by adding rated current of motors of two largest mechanism (motions)and auxiliary loads (like AC, Illumination, Control, UPS etc.).

The current rating of Isolator on Crane shall be suitable for Maximum Demand of Crane.

15.1.03.02 Current rating ofDSL:

The current rating of DSL feeding one Crane is guided by Maximum Demand of Crane.

The current rating of DSL feeding multiple cranes, the total current of Installation, as defined below shall be considered for selection of Ampere rating of DSL.

Equivalent Current of the installation:

Number of Cranes	1st Highest rated motorcurrent **(I)**	2nd Highest rated motorcurrent **(I)**	3rd Highest rated motorcurrent **(I)**	4th Highest rated motorcurrent **(I)**	Current of Auxilliary loads (Lighting, Control, AC/VS, UPS etc.) **(I_G)**
1	I_1	I_2	-	-	I_G
2	I_1	I_2	I_3	-	$I_{G1(1st\ crane)} + I_{G2(2nd\ crane)}$
3	I_1	I_2	I_3	I_4	$I_{G1(1st\ crane)} + I_{G2(2nd\ crane)} + I_{G3(3rdcrane)}$

Total equivalent current of Installation (DSL)= $\sum I_D + \sum I_G$

The ampere rating of DSL feeding Isolators, Incomers, Bus-coupler & outgoings of Crane Bay PDBs, outgoings of PDBs for feeding to DSL etc. shall be selected considering above Equivalent Continuous current.

15.1.04 Power Supply Arrangements and Trolley Lines (DSL System)for Cranes:

15.1.04.01 Power Supply Arrangements for Cranes

© 2022 MECON Limited All rights reserved

Electric power for operation of the cranes shall be available at 690 V or 415 V (as per system), 3-phase, 4-wire, 50 Hz, and the 4th wire being the earthed conductor. The earth conductor shall be provided on top.

Power to the DSL of Laddle Cranes and bigger Process Cranes shall be fed from crane LTPCC through PDB's installed in respective bays. Number of panels shall be decided as per requirement (to be indicated by the Tenderer).

Power supply to other cranes shall be fed either through dedicated Crane LTPCCor nearby shop LTPCC as per defined in TS.

Power supply from various crane LTPCC/shop LTPCC shall be fed to separate crane Power supply Distribution Boards (PDB) located in the respective shop bay or separate Bay Isolator as specified in TS.Bay isolators are generally used for maintenance cranes. The number of PDBs shall be decided considering layout and bay length during engineering.

TheBay PDB shall have 02 incomers and 01 bus-coupler with padlocking arrangement. The Incomers and Bus couplers shall be ACB/MCCB with LSIG protection.Normally one Incomer and Buscoupler shall be made ON and 2ndIncomer will be OFF. Each Incomer &Bus-coupler, Busbars shall be suitable to take care of the entire load of cranes in case of outage of one incomer. The PDBs shall be provided with required numbers of outgoing breakers (including feeder for repair trolleys of respective cranes) (ACB/MCCB) with 2nos. of 63A spare feeder (1 number in each section).
In case the rating of breaker is more than 630A, then ACB shall be used. In case rating of breaker is 630A or less, then MCCB shall be used.

In case of use of Bay Isolator, it shall be provided with one incomer or as specified in TS
Crane trolley lines (DSL) feeding cranes in major production units shall be sectionalized with minimum two separate feeding points or more as per requirement of voltage drop to be decided during engineering. Sectionaliser shall be provided with MCCB/ACBs along with necessary padlocking arrangement.

Insulation air gap between two sections of a sectionalised trolley line shall be minimum 50 mm for voltage levels upto 500V, but in no case should be greater than 100 mm .

All the Bay PDB shall be installed in the bay / shop floor &shall be mounted in the respective column of the feeding bay in a separate enclosure at man height level.

Phase Signal lamp assembly for DSL (LED cluster type) shall be provided just below the trolley lines at maximum 60m intervals as well as at the beginning and end of each section/repair section to indicate whether the trolley lines are energized or not.

For under slung cranes, power supply arrangement shall be either through DSL or festoon cables or insulated shrouded bus bar system as per mechanical clearance diagram.

15.1.04.02 Trolley line power conductors

The Power conductors or down shop lead (DSL) shall have 4 conductors, 3 phase, 4 trolley line system (3 power + 1 earth). The earth conductor shall be located on top.

© 2022 MECON Limited All rights reserved

Following sections of DSL shall be used for different crane capacity:-

Upto 10 t capacity	:	50 x 50-x 6 mm MS angle (Minimum)
Above 10t upto 100 t	:	75 x 75 x 6-mm MS angles(Minimum).
Above 100 t	:	Rail size of 75 lb. (Minimum)

The crane power conductors (Down Shop Leads) of EOT crane shall be of above mentioned mild steel sections and gravity type current collectors .

The section shall be straight and smooth on the running surface. The power conductors shall be made from standard rolling length. The jointing of standard lengths shall be made by 100% butt welding and top surface finished smooth by grinding to get free movement of the current collectors. The conductors shall be painted with anticorrosive paint, except for contact surface. The maximum continuous length of power conductor section shall not exceed 30 m without an expansion joint in between. Expansion and section gaps shall be provided in rails at every 30m. The gaps shall be cut at an angle of 30 degree to the rail and shall be 50mm wide. The gaps shall be provided with flexible joints.

The conductors shall be supported at 3000 mm intervals by insulators mounted on brackets welded to crane girders. Typical drawings indicating details of trolley line power conductors, supporting insulators, brackets, expansion joints, parallel aluminum bus, signal lamp assemblies etc. shall be furnished by successful Tenderer.

In order to provide electrical continuity across the expansion joints the power conductors on both sides of the joints shall be connected by stranded copper conductor jumper, fitted with steel copper strap and lugs suitable for the steel angle sections.

Parallel aluminum buses / looping cables (or both if required) shall be used in parallel with the conductor rails wherever necessary, for limiting the voltage drops.

The sizes of conductors shall be selected to suit the total current requirements of EOT cranes (as defined in earlier clause) keeping the voltage drop in the crane DSL system upto the crane power collecting point on DSL within 3% of the declared voltage under worst operating condition.

The power supply feeder and trolley line conductors/looping cables shall be selected so as to limit the voltage dip to within 10% of the rated voltage at the crane motor terminals for the short time peak current during starting of the largest capacity motor and the maximum continuous operating current of the rest on the system.

Following safety measures shall be provided for DSL (as per **IPSS:2-02-007-01)**

Cranes operating on bare conductors and are located below the runway rails shall be equipped with adequate guards to prevent any foreign material e.g the hoist ropes coming in contact with the live conductors due to swing of the hook block or while handling long lengths of conducting materials from floor.

When the crane cabin is located by the side of the down shop leads, it shall be protected by providing suitable guards/wire mesh structure for safety of the crane operator or other people.

Suitable wire mesh guard shall be provided on down shop leads inspection cage to protect the maintenance personnel.

© 2022 MECON Limited All rights reserved

15.1.04.03 Maintenance Bay

When two or more cranes are fed from the same trolley line, maintenance bays (repair sections) shall be provided with sectionalizing isolator so that repair or maintenance of any crane can be carried out without disturbing the operation of the other cranes. Necessary DSL arrangement for repair section shall be provided by Tenderer.

Isolator panels (ACB / MCCB panels including cables) shall be provided for each repair section for maintenance. Dead zones shall be provided with isolator arrangements to prevent collision between cranes and momentary paralleling to two incomer supplies. Incomer ACB's shall be provided with earth fault protection, magnetic &over current releases. The DBs shall be located suitably on the shop floor.

For end zones, minimum length of maintenance bay shall be 2 m plus the crane width. For middle zone, the length of maintenance bay shall be 4 m plus the width of crane.

Repair section shall be provided with red lamp steady/flashing fixtures at four corners. These fixtures shall be located at crane gantry with manual ON/OFF provision.

Boarding or access platform shall be arranged within the limits of each repair section for approach to the crane.

15.1.04.04 Insulators and trolley line holders:

The insulator assembly used for the manufacture of trolley line holders shall be preferably polyester resign bonded fibre glass type or better insulation material having substantial mechanical strength specifically against blows and vibrations. They shall be capable of withstanding the impact and shocks resulting from operation of the machine. The creep age distance of the insulators shall not be less than 80 mm.

The insulators used in the LT/AC system shall have flash over values and mechanical strength not less than the following:

Dry flashover voltage	:	25 kV
Wet flashover voltage	:	12 kV
Ultimate mechanical strength	:	1000 kg.

The trolley line holders shall generally conform to the design shown in the drawing to be furnished to the successful Tenderer. All sharp edges shall be ground smooth. The porcelain insulators shall be manufactured and tested as per IS: 1445 –1997

The insulation voltage of the 690 V DSL system shall be of minimum 1000 V AC

15.1.04.05 Supporting brackets:

The trolley line conductors shall be mounted on holders. The holders shall be bolted on to brackets which in turn shall be welded on to crane girder at stiffeners at regular intervals. In normal run, intermediate type of brackets shall be used, but when sectionalizing gaps or expansion joints are provided, sectionalizing type of brackets shall be provided.

15.1.04.06 Steel to Aluminium straps:

© 2022 MECON Limited All rights reserved

These are meant for connecting parallel aluminium bus, at expansion joints, power supply cables from load break switch. They shall be complete with MS cadmium coated bolt nuts, spring washers, lugs etc.

15.1.04.07 Signal lamp assembly:

Signal lamp assembly shall be industrial, heavy duty dust tight and water proof in construction suitable for indoor or outdoor locations. The units shall comprise three lamps for three phases with red glass lens and reflectors. The lamp shall be LED cluster type.

4 Nos. cluster LED type red warning lights shall be installed at the four corners of the crane to indicate that the crane is down undergoing repairs.

15.1.04.08 Aluminium parallel bus:

These buses shall be of E.C. grade aluminium. They shall be free from any deformity in profiles.

15.1.05 Current Collectors:

2 nos. per trolley line shall be provided. The collector shoe shall be of heavy duty design and chamfered at both ends, each rated for 100% of total crane rating. Double collectors on each earth trolley line shall be provided and these shall be different from those on power trolley line. Collector shall be multi hinged for self – aligning. Collector shall be designed in such a way that load is transmitted not on the insulators but on the insulator stud to avoid damage to insulators.

All the current collectors shall be spring loaded to avoid any loose contacts during the movement.

15.1.06 Power distribution on crane:

15.1.07 Load break manual isolator

One adequately rated load break manual isolator (MCCB/ ACB) with locking facility shall be provided immediately after current collectors on incoming line on the crane. The isolator shall be capable of carrying current of two largest mechanism motors and Auxilliary loads of Crane.

15.1.08 **Protective Panel**

Power from above Load break manual isolator shall be taken to the MCCB/ACB to be locatedin protective panel.The circuit breaker MCCB/ACB shall be provided with under voltage, over load and short circuit releases. The breaker shall also be with earth fault protection. The breaker can be closed only when:

- All master controller handles are in neutral position.
- None of the stator or directional contactors are in closed positions.
- Emergency corner switches not operated.
- Door/Gate switch are not actuated
- Gravity limit switch for hoist motionnot operated.

© 2022 MECON Limited All rights reserved

Power for lighting circuits shall be tapped from the incoming side of Manual Isolator through Lighting Transformer.

Power for Control circuit shall be tapped from the incoming side of MCCB/ACB through Control Transformer in Protective Panel.

Power for all the mechanism/ motion shall be tapped from the Protective Panel

Protective Panel may be mounted in air-conditioned E. House or at bridge platform as per Crane clearance drawing.

15.1.09 Meters:

- Ammeter andVoltmeter with selector switches shall be provided on the incoming side of ACB/MCCBin operator's cabin
- Energy meters shall be provided for Ladles & Process Cranes
- Ammeter and voltmeter shall be provided on DC side for Electromagnets.

15.1.10 Power supply for CT. motion:

Flexible trailing cable systems mounted on retracting support system shall be used. The system shall consist of insulated multi-conductor or several single conductor cables with permanent termination on the bridge and on the trolley. The flexible trailing cables shall have ample length and shall be supported by means of properly designed movable clamps. These clamps shall be fitted with rollers and shall run freely on a guide rail allowing relative movement of bridge and trolley without undue stress or wear on the suspended cable. Provision later stage in case of necessity. The flexible cable shall be butyl rubber or EPR insulated CSP sheathed type.

15.1.11 Power supply for rotating trolley cranes

Power supply for rotating trolley cranes shall be through festoon cable arrangement, slip ring or cable basket. Cable reeling drum or cable basket shall be used for power supply to the magnet from the trolley. The cable reeling drum shall be provided with minimum 2 spare turn/loop. The cable reeling drum shall be directly driven by hoist mechanism, a clutch shall also be provided to disconnect the drum from hoist mechanism.

Flexible cables system to be mounted on PVC linked chain system in normal areashaving ambient temperator & metallic chain systems shall be provided in hot metal handling areas/hot zones having temperature above ambient temperature.

15.1.12 Cranes with VFD

All the motions shall be provided with VFD control using Squirrel Cage Induction Motor.

For cabin operated cranes, control shall be achieved through master controllers for each motion. Rated and creep speeds are to be provided in each direction e.g. hoisting and lowering. Creep speed shall be 10% or lower as per operational requirements of rated speed. Hard wiring shall be used from Master controllers in Operator's Cabin to respective VFD Panels. FO cables should not be used.

The VFD shall be fully controlled and suitable for four quadrant operation.

© 2022 MECON Limited All rights reserved

- **Closed loop regulation:**

For closed loop regulation, speed & current feedback shall be provided.

Closed–loop speed control of AC motor shall be provided with speed reference signal given by the master controller and speed feed–back signal by the encoder coupled to the main & auxiliary hoist drives. speed feedback facility shall be provided for **each motor** through encoder mounted on the non-driving end of the motor shaft .

In case of individual drive, speed feedback from encoder output shall be directly hardwired to the respective VFD terminals directly .

For Long travel of Ladle Cranes & Process craneshaving group drive, speed feedback from only one motor shall be used. Cables from each motor encoder to the respective VFD shall be laid on the crane which are to be used at a later date as per requirement. Encoders along with coupling shall be loosely supplied where they are not mounted on the motors. Encoders shall be used with proper coupling consisting of required gear ratio. For Long travel of maintenance cranes, speed feedback shall be used through VFD.

The regulation shall include ramp generators, potentiometers for various setting, various regulators, signal conditioners, logic command module sequence, module, trigger module, zero and over speed monitor, torque less protection module etc. as per the requirements. The control and regulation equipment shall be able to maintain their rated performance and control quality even under conditions of variation of +10% and - 15% in voltage and ±5% in frequency. A zero current sensing device shall be incorporated. The reversing of motor direction shall be done at zero current. Braking down to zero speed shall be electrical with mechanical brake setting only at zero speed. Protective features like anti-drop etc. shall be incorporated to prevent load setting. The circuitry shall also provide for the protection against failure of motor torque such that the mechanical brake sets in such cases. All other features of conventional crane controls shall also be built into the scheme. The following shall also be provided on the A.C. side of VFD.

- Surge suppressor
- Over current protection
- Overload protection
- Single phase protection
- Phase sequence protection
- Ammeter and voltmeter with selector switches
- Isolating switches

- **Long Travel Motion:**

For long travelmotion having more than one motor, single VFD can be used for speed control of a group of two motors. For example, in case the travel is provided with two motors, then one VFD can be used. In case the travel is provided with 4 motors, then two VFDs can be used for group of two motors.

Over load relay shall be provided for each motor connected to group drive.

In case of non-availability of one motor,fortwo motor application and non-availability of two motors for4 motor application, operation of the crane shall be carried out with reduced speed.As an anti-skewing measure, for 4 motor application of long travel, out of a pair of motors, if one drive motor trips, the other drive motor of that pair shall also be switched off.

For pendant control,Plugging shall be avoided for travel motion.

© 2022 MECON Limited All rights reserved

Brakes shall not be used for speed control.

- **Hoist Motion:**

  Hoist control circuit shall also be provided with anti-drop feature i.e., whenever the master controller is brought back to zero position from higher notches in both directions, the motor shall automatically be connected to hoisting direction for some time (time adjustable through timers) to avoid the downward drift of the load. Brakes shall be clamped in zero position of the master controller.

- Other details of VFD shall be as per respective clause for VFD in the GTS.

15.1.13 Ladle Cranes and Process cranes 100T & above:

- **Configuration to be followed:**

The drive system shall be vector control drive having redundant (100% standby) common converters with regenerative feature (active front end type-AFE) with common DC bus configuration and individual inverter for motors of all motions shall be provided. The common DC bus shall have 02 incomers and no bus-coupler (as only one converter shall be operational at a time). All the incomers shall be double pole DC switch disconnector. The DC switch disconnector shall be suitable for minimum 800 V DC for (415 V system) and 1000 V DC for (690 V system). DC Isolators (double pole) between common DC bus and individual inverters shall be provided. However for LT and CT, group Inverter shall be provided as detailed above.

Redundant PLC shall be considered. Further crane shall be controlled from Arm Chair Control Desk mounted in Operator Cabin.

- **Sizing:**

  - **Inverter:** Rating of each inverter shall be150% of motor rated current (name plate current) for all the motions. The rating of each inverter shall be selected from heavy duty current and derating shall be done for ambient temperature of 50deg.C. (as Converter, Inverters shall be kept in air-conditioned E-House or Box-girder)
  - AFE (Converter):The heavy duty current rating of AFE (converter) shall be more than current rating of inverters of two largest mechanisms of crane.
  - Rating of the incoming circuit breaker shall be 150% of the rated current of the AFE (converter).
  - To take care of the undervoltage in the incoming power supply system of the crane for more than the set time in undervoltage relay due to the motor regeneration and motoring mode, a UPS of proper rating shall be provided for the power supply of the AFE control section to avoid control voltage power outage resulting in dropping of all the contactors / breakers.
  - Spares:

    Following Spares shall be provided:

    - One set of AFE as described in above Cl. No.-13.07.01.01
    - For hoist applications, one cold standby pre-wired sparemain hoist inverter with changeover AC isolator (MCCB / ACB with no tripping device) shall be provided.

© 2022 MECON Limited All rights reserved

- For LT, CT applications, one cold standby pre-wired spare LT group drive inverter with changeover AC isolator (MCCB / ACB with no tripping device) shall be provided.

- **Housing of Equipments:**

  The electronic equipment like Converters,Inverter drives, PLC, UPS, Weighing Panel etc. shall be housed in E-Housewith 100% redundant (1Working + 1Hot Standby) air conditioner.

15.1.14 Process Cranes below 100T:

- **Configuration to be followed:**

  The drive system shall be standalone (for each motor separately). VFD with rating of 200 KVA and above shall be active front end type .VFD below 200kVA shall be vector control drive suitable for four quadrant operation with dynamic braking facility .

  For LT and CT, group drive shall be provided as detailed above.

- **Sizing of VFD:**

  Rating of each VFD shall be 150% of motor rated current (name plate current) for all the motions. The continuous current rating of VFD shall be selected from heavy duty current and derating shall be done for ambient temperature of 50deg.C.

  Rating of the incoming circuit breaker shall be 150% of the rated current of the VFD.

- **Spares:**

  One cold standby pre-wired spare main hoist inverter with changeover AC isolator (MCCB / ACB with no tripping device) shall be provided.

- **Housing of Equipments:**

  VFDs shall be kept in Air conditioned E-House or VFD Panels with panel mounted AC on the girder as per Crane clearance diagram.

15.1.15 Service/Maintenance cranes

- **Configuration to be followed :**

  The drive system shall be standalone (for each motor separately) vector control drive suitable for four quadrant operation with dynamic braking facility .

  For LT and CT, group drive shall be provided as per detailed above.

- Sizing:

  Rating of each VFD shall be 150% of motor rated current (name plate current) for all the motions. The continuous current rating of VFD shall be selected from heavy duty current and derating shall be done for ambient temperature of 50deg.C.

  Rating of the incoming circuit breaker shall be 150% of the rated current of the VFD.

© 2022 MECON Limited All rights reserved

- **Housing of Equipments:**

  VFDs shall be kept in Air conditioned E-House or VFD Panels with panel mounted AC on the girder as per Crane clearance diagram.

15.1.16 Conventional control for SG EOTUS Cranes, Jib Cranes, Wall Cranes

Configuration to be followed :

Conventional controls (NO VFD) shall be considered.Following equipment/devices shall be considered:

A TPN MCCB isolator of adequate rating with O/C, S/C & E/F protections. The rating of the MCCB shall be sufficient to carry the combined full load currents of all the motion.

A three pole main line magnetic contactor suitable to carry the combined full load currents of all the motion.

MPCB, Contactors & over load relays (EOCR) in the individual motor power circuit. The over load relays shall be self reset type.

Reversing contactors for individual motors. The rating of the contactors shall be atleast 50% higher than the respective motor full load current at the specified duty cycle. The minimum rating of the power contactor shall be 30 amps. It shall be heavy duty & of class AC-4 as per IS: 2959-1985. The reversing contactors for individual motors shall be electrically & mechanically interlocked. The control scheme adopted shall ensure smoothed normal speed operation as specified.

Transformer & transformer rectifier set for control voltage supply & for supply to DC electro magnetic brakes respectively.

Speed control equipment as necessary.

15.1.17 Panels

All panels shall be of free-standing floor-mounting construction, suitable to withstand vibrations encountered on crane. Hinged doors shall be provided for closed type panels. Panels shall be front wired. Front wired live points of bottom most equipment shall be mounted at least 350 mm above the bottom cover of the panel. Panel shall be fabricated from 2.0 mm thick CRCA steel sheet. Power wiring shall be carried out using PVC flexible copper conductors of adequate size on the basis of load current/motor full load current. Minimum size of power wiring shall be 4sq.mm flexible copper. Control wiring including CT/PT wiring, lighting circuit, 24V/240V AC power circuit shall be carried out using 2.5sq.mm PVC insulated, flexible, stranded copper conductors.

Power and control terminals shall be segregated. 10% spare terminals shall be provided in each panel. Ferrule numbers used with wires shall be same as TB number inside control panel.

© 2022 MECON Limited All rights reserved

Equipment in the panel shall be so mounted that their removal or replacement from the front is easy. Operating panel of each VFD shall be mounted on respective panel door.

Separate control panel for each motion shall be provided.

All the panels of process cranes shall be mounted in the E-room and E-room shall be located outside the box girder enclosure or inside the box girder enclosure (as per the crane design).

15.1.18 Panels installed on the girder outside E-House/ Box girder enclosure(for small cranes)

Panels shall be of closed type when mounted on bridge platform.

The panels shall be mounted along the girder facing the hand railing. Sufficient clearances (minimum of 1000mm) shall be provided between front to front in case of two rows of panels. In case of single row of panels, minimum clearance of 1000mm shall be provided for walkway and approach. The panels shall be supported in the back from the girder to avoid vibrations.

VFD panels installed in areas where ambient temperature is more than 40 deg C, panel mounted AC shall be provided.

15.1.18.1 Panels installed inside the E-Room/ box girder enclosure

Panels shall be preferably of open execution.

Inside each panel, there shall be item designation tags for each item. These shall be placed at a convenient place near fixed portion of the panel as well as on the body of the item. Equipment designation tags on the fixed portion shall be on Acrylic plate and names shall be embossed. On the item body, the designation tags shall be on printed stickers.

The controls shall be designed such that the crane shall operate satisfactory even without air conditioning.

Adequate lighting and AC (1W+1S)(LINTERN, USA make/FRIGORTEC-GERMANY/DOCON-RUSSIA) make shall be provided for the enclosure.

15.1.19 Switchgears:

Each VFD incomer shall be provided with MCCB with LSIG protection, line contactor on incoming sides .

DP MCB shall be provided in the control circuit of each motion.

Each brake circuit shall be provided with a suitable contactor.

Rating of contactor selected for any mechanism shall be at least 150% of the respective motor name plate current. The minimum rating of the contactor used shall be 32A.

Reversible directional contactorsshall be inter locked both mechanically and electrically.

Current rating of the circuit breaker shall be 150% of the nominal current rating of the VFD. In case of motors are driven without VFD, rating of the circuit breaker (MPCB) shall be 150% of the motor FLC . All the circuit breakers shall operate at ambient temperature mentioned in TS.

© 2022 MECON Limited All rights reserved

15.1.20 Motors:

Motors shall be reversible, crane duty, totally enclosed fan cooled, foot mounted, squirrel cage suitable for inverterduty conforming to latest edition of IS: 325-1996 and IEC 60034. Class of insulation shall be H with temperature rise limited to that for 'F'. Pullout torque shall not be less than 250%. Minimum IP55 protection class motor to be provided .

Motor poles and speed shall be decided as per mechanical requirement/clearance diagram.

All motors shall have the terminal box at top. However, for higher frame size motors side mounted may be accepted considering ease of cable termination. Frame sizes shall conform to IEC Standards.

Horizontal foot mounted and with tapered shaft extension.

Motor power calculation shall be as per latest Indian Standards.

While selecting the motor rating, following shall also be taken into consideration:

- Duty type S4 & S5 as per process requirement
- Cyclic duty factor as per process requirement
- Number of starts/stop per hours as per process requirement
- Type of controls used
- Ambient correction factor
- Service factor

While calculating motor power a deration factor of 1.18 shall be considered for inverter duty motor on account of VFD operation in addition to all the other derating factors.

Maximum permissible operating speed shall be 250% of synchronous speed or 2000 rpm whichever is less. Over load capacity 150% of full load current for 2 minutes without damage or permanent deformation from zero to base speed.

Thermistors shall be provided for motor protection.

Temperature deration shall be done from designed temperature (40 deg. C) to defined ambient temperature while selecting motor power rating.

All the motors shall have insulated bearings at NDE to reduce shaft current for frame size of 280and above.

The encoder couplings shall have capacity to tolerate Axial, Radial and Transverse displacements.

15.1.21 Brakes:

Brakes shall be preferably D.C. electromagnetic type confirming to AISE Standard or as per Mechanical GA drawing. The brake coils shall be made of copper and of insulation class 'F'.

Brakes shall be designed to fail safe whenever the current is interrupted either intentionally or by failure of the main supply.

Brake circuit forcing shall be provided for D.C. brakes. D.C brake circuit shall be switched off on D.C. circuit for quick operation of brake.

A separate set of parking brake for L.T. motion shall be provided for each out door crane. Power supply for these brakes shall be obtained from protective panel.

© 2022 MECON Limited All rights reserved

For process cranes, a center Zero voltmeter of suitable rating in series with a push-button shall be provided on the DC side of the Brake panel for monitoring and measuring forcing voltage to the DC brake coils

For process cranes, in addition to service brakes, one set emergency disc brakes to be mounted on each rope drum shall be provided for MH along with suitable over speed protection device so that in any case the speed of the load tends to exceed the rated maximum speed due to any mechanical failure on any part of the driving system in between motor and rope drum, the protection device shall cause the power supply to be shut–off, and the emergency brake shall be applied immediately to hold the load.

15.1.22 Limit switches:

Roller lever operated, resetting limit switches shall be provided for all travel motions. For each hoist motion, a rotary cam type over hoist and over lower, self resetting limit switch shall be provided. This limit switch shall have independently adjustable cams for hoisting and lowering motion. The cams shall have adjustability such that end limit can be set to within 100 mm of the hoisting or lowering motion. In addition to this, a back up ultimate limit switch of series/ shunt gravity type shall be provided to prevent over hoist. The later shall be of manual reset type. In case of cranes handling hot metal, the gravity limit switch shall preferably be of shunt type. Provision shall be made to bypass/bridge the gravity type limit switch contact by push button/ switch or any other means to lower the load. An indication shall be provided to the operator whenever this limit switch has operated. Suitable limit switch shall be provided for slack rope, gate/door opening, slew mechanism, grab closing/ opening etc. wherever necessary.

Protection class of the limit switch shall be minimum IP 65.Limit switches shall be Heavy Dutyand shall have minimum 2NO & 2NC Contacts.

15.1.23 Anti- Collision Devices:

In case two or more cranes are operating in the same bay (at same or different level) all cranes shall be provided with suitable Anti- collision system. Anti-collision device shall preferably be **ultra-sonic type/radar type.**

A sound signal shall be provided to the crane operator when they are at certain safe distance apart (distance to be adjusted as a function of speed at site) and crane shall stop. After few seconds, it shall be possible to run the cranes towards each other (or only one crane can move towards the other) till buffers of the cranes meet by providing “by pass’ in the operators cabin.

Anti-collision shall also be provided on trolley for twin trolley cranes along with suitable by pass arrangement.

15.1.24 Resistances (Not applicable for VFD operated cranes).

Air cooled, robust, heavy duty, corrosion resistant fechral edge wound resistance. Resistance shall be in single phase execution. In a particular box the rating of resistances shall be the same. Resistance shall have vibration proof only.

Rated for 10 minutes duty.

Maximum temperature (absolute temperature) of resistor elements shall be limited to 335 deg C at desired duty. Suitable tapping points shall be provided.

© 2022 MECON Limited All rights reserved

Resistance boxes shall be mounted in racks that permit independent removal of any selected box.

15.1.25 Master controller

Cam type master controller with joy stick type lever shall be used.

Separate master controllers for hoist, LT & CT shall be provided.

Dual master controller operated with single handle shall not be used.

Master controller for each motion controls shall have 5-0-5 notches in each direction. It shall be possible to use step-less control for all VFD operation.Suitable transducer shall be provided. It shall Spring return type and suitable for Heavy Duty Operation.

Master controller for magnet shall have three positions i.e Lift - Off - Drop. It shall have spring return from drop position to Off position.

15.1.26 Lighting, socket outlets, bells etc.

Lighting shall be provided in Operator's cabin, E-House, staircases, platforms, under bridgeand working areas.

Adequately rated Lighting Transformer shall be provided.LDB shall be provided for each girder and One in Operator Cabin.

Minimum 8nosof 180 W LED equally spaced (under crane girders) about the crane span shall be provided along with shock absorbing and anti-swing suspension arrangementswith cage. More numbers of fittings shall be provided if required for cranes with longer span and/or longer height of lift.

Energy efficient LED tubular lamps25 W with necessary fittings shall be used for operator's cabin, staircases, platforms etc.

Adequate numbers (minimum 4 numbers)of hand lamp socket outlets (2 Pin, 10A, 24V) and minimum 4 numbers of power socket outlets (3 Pin, 20A, 240V) shall be provided along with switches socket & switch shall be interlocked suitably. A hand lamp (LEDlamp with enclosed type battery and wire guard) along with sufficient length (15m) of cable with a plug shall also be provided for each crane.

An alarm bell shall be provided on each crane.

2 numbers of Flashing Lights with hooter shall be provided which shall be operational during LT movement.

15.1.27 Electromagnets:

All magnets shall be suitable for steel plant application and shall be welded construction.

Magnets shall be rated for 220 V DC and suitable transformer – rectifier units shall be provided for feeding them. Rectifiers shall also be suitable protected by suitable protective device.

© 2022 MECON Limited All rights reserved

Magnets shall be class 'H' insulated, at least 50% rated, copper conductor wound and shall have surge suppressor box and separate in terminal box for termination of cable. Surge suppressor shall be compact, non-linear resistor silicon carbide thyrector, variator or metrosil type. Magnets for production cranes handling hot products shall be able to operate successfully upto 600 deg.C .

Each magnet shall be provided with suitable plug socket unit , 2 poles+earth , under a hinged steel protection cover .

One earth terminal on magnet to be connected to spare core in magnet cable.

Wherever specified, a set of batteries, a battery charger, one annunciation system and other accessories shall also be provided along with magnet so that the magnet can hold the full load for at least 20 minutes in case of power failure.

Aging factor of 1.4 and design margin of 10% shall be considered in Battery sizing calculation.

In addition to electromagnets, permanent magnets shall be provided for Billets / Blooms / Beam Blanks handling for avoiding fall of Billets / Blooms / Beam Blanks as safety aspect.

15.1.28 Crane Weighing System

Crane electronic weighing system to be provided for cranes as mentioned in respective TS.

Strain gauge type electronic load weighing system on trolley, either at load pin or on the trolley wheel base or Wheel bogey as per crane mechanical design shall be provided. The weighing system shall be complete with weighing electronics, display, communication & programming unit. The displays (7 segment LED) shall be in the operator's cabin as well as on the outsideof bridge girder readable from the shop floor leveland having minimum digit height of 300mm.

Electronic weighing system shall include calibration equipment, cables, load cells, encoder (rope weight compensator)and panel mounted associated electronics (microprocessor based) and shall communicate to PLC.

Crane weighing system/PLC shall be connected to ground station by Radio link module. Necessary hardware & software including cables for above as well as communication of ground station with main shop L1 Automation system shall be provided.

Various data including weighing data communication from EOT cranesto ground station and from ground station to Shop L1 Automation PLC shall be provided.

Crane weighing system shall be suitable for operation at 415V, 3 Phase, 50 Hz. AC through crane trolley line. In case regulated power is required, dedicated UPS of suitable rating shall be provided

The capacity & numbers of load cells shall be decided as per mechanical requirement considering tare weigh, weight to be measured, design margin etc. While deciding the capacity of load cell 150% design safety margin shall be considered. Overload capability of load cell shall be min 250% rated capacity without adversely affecting its characteristics and 400% of rated capacity without getting physically damaged.

The load cell shall operate satisfactorily with supply & frequency variations, complete protection against heat, dust and rain.The load cell shall provide desired accuracy for

© 2022 MECON Limited All rights reserved

particular application. The built in temp.compensation in the range of 0^0 C to 80^0 Cwith Error Less 0.3 %

Required numbers of load cells shall be used and mounted at most suitable locations and protected against vibrations and forces irrelevant to the measured quantity.

The weighing system on the crane shall be intended to measure the weight of materials being handled and shall be provided with the following:

- Micro processor based weighing electronics complete with programming unit, communication module, special cable (optical fibre) etc.
- Necessary digital displays(LED)type
- Automatic Calibration Check
- Overall accuracy of the system : +0.2% of rated capacity

Other details of crane weighing system:

1. The Weighing system shall be designed, manufactured, assembled & tested in accordance with relevant OIML / NTEP standards.
2. Weighing/Load cell shall be from approved make, confirming to OIML/NTEP Standard. Load cell shall be easily replaceable type, provided with safely devices from impact load, vibration, heat & dust.
3. Weighing system shall be auto zero & auto calibration facilities.
4. Test weight for calibration shall be provided.
5. Two numbers of display (one large) unit shall be provided.
6. The requirement of the system are:

i) The Weighing system shall be sufficient to measure, display and telemeter the loading material weight, meet all operating requirement and necessary safety provision including alarms for abnormal conditions. Design should support better tolerances in the mechanical system.

ii) The equipment selected for the purpose shall be suitable for a continuous and reliable functioning in environment generally prevailing in steel plant area. Signal transmission shall be through radio communication. The frequency used shall be in license free bands as per prevailing standards in India.

iii) The design shall include all necessary precautions and provision for the safety of operating and maintenance personnel and equipment.

iv) Accuracy of the system shall not be less than ± 0.5% of FSD.

v) The Crane Weigh unit shall be able to tolerate sudden shock loads caused by the lifting and traveling of crane. Weigh unit shall be suitable for continuous loading for long durations. Electronics shall be resistant to vibration prevalent in cranes.

vi) Weight signal shall not be affected by the height at which load is weighed.Encoder for rope weight compensation shall be considered.

vii) The Weighing system shall have protection against strong magnetic field, electrical surge, RF interference and heat & dust.

viii) Data updation on real time basis in the central computer.

ix) Integration of subunits.

© 2022 MECON Limited All rights reserved

15.1.29 Mode of Control

15.1.29.1 Pendant controlled crane shall have following in the pendant unit:

Push button for	Hoist slow, hoist fast, lower slow, lower fast, left cross traverse, right cross traverse, forward long travel, backward long travel, emergency stop conditions.
Switch for	Lights and bells
Lamps for	Power 'ON' indication and emergency corner switch operation.

15.1.29.2 Cabin operated cranes:

The operator's cabin shall contain the following:

- Master controllers for all the motions and magnet (wherever applicable).
- Emergency stop push button.
- Foot switch for alarm or bell.
- Switches for all lighting equipment on crane.
- Switches for air conditioner, exhaust fan and for cabin fan.
- A fire extinguisher.
- Insulating mat and operator's chair.
- Cabin light.

  Annunciation panel with indication lamps for power 'ON' control 'ON' emergency corner switch operated, ammeter and voltmeter with selector switches.

15.1.29.3 Control pulpit operated cranes:-

In this case, there should be the facility of controlling the crane from the control pulpit (e.g in case of casting machine in pig casting shop of blast furnace)

All the control facility available in case of operating from the operator's cabin is duplicated in the control pulpit through the cable.

15.1.29.4 Radio remote control (RRC):-

In this mode of control system, all the 3 motions can be controlled:

- Hoist.
- Cross travel.
- Long travel.

© 2022 MECON Limited All rights reserved

The system shall use licensed free band frequency issued by ministry of communications, Govt of India (i.e., 335.7125, 335.7375, 335.7625, 335.7875, 335.8125, 333.8375)MHz.

Suitable encryption/security code shall be provided to avoid interference with other equipment for safe operation.

In the case of signal failure, all motion shall come to a safe stop.

Transmitter:-

Transmitter shall have following features:-

- Constructed with sophisticated microprocessor technology and surface mounted electronics.
- Transmission type: - FM FSK
- Transmission speed: - 9.6 Kbps.
- Built in self test for all functions.
- Transmitter shall consist of switching breaker, dial switch and push buttons.
- Switching breaker shall be non locking to zero position or maintained function.
- Indications:-
  - Operation status
  - Battery status
  - Indicators that display information from crane.
- PIN -code (Personal Identification Number)
- Internal antenna.
- Rechargeable battery.
- Battery 12 V NiCd
- Operating time: - About 8 hours.
- Different operating frequencies (minimum 16 nos.)
- Two hand upstart.
- Stop push button.
- Operating conditions: - Areas having large temperature variations, dusty, more vibrations, oil and humidity.
- Operating temperature range: - Min. 10 deg.C to Max. 60 deg.C
- Protection class: IP - 54.
- Casing material: Polycarbonate / ABS plastic.

Receiver:-

Receiver shall have following features:-

- Upto 20 functions exclusive safety relays (for transmitting preset reference values to VFD in the crane).

© 2022 MECON Limited All rights reserved

- 2 safety relays (for control of main contactor)
- Power supply suitable for 240 V AC, 6 A.
- Minimum 16 different operating frequencies.
- Two redundant microprocessors for monitoring each others.
- Cyclically redundancy check check for high secutity of transmitted radio messages.
- Frequency scanning in the receiver .
- Memories last 10 users .
- Interlocking of the relays .
- Momentary or latched relay functions .
- Two hand up start (to avoid unintentional start).
- Protection class : IP - 65.
- Casing material : Aluminium profile for fast mounting on DIN rail –
- Operating temperature range :- Min. 10 deg.C to Max. 60 deg.C

15.1.30 Enclosure Class

a) For indoor operations

- Resistance boxes : IP : 11
- Motors : IP : 55
- All other electric equipment : IP : 54

b) For outdoor operations

- Resistance boxes : IP : 33 with canopy
- Motors & panel : IP : 55 with canopy
- All other electrical equipment : IP : 65 with canopy

15.1.31 Cables:

Power cables from LTSS to bay PDBs/Bay Isolators, bay PDBs/Isolators to DSL (through column isolator as per requirement)shall be suitable for 3 Phase, 4 wire, AC power supply system. 4th core of the cable from bay PDBs to DSL shall be used for earthing. These cables shall be 3.5C, 1.1kV grade, heavy duty, XLPE insulated, aluminium armoured cable conforming to Indian Standards.

All other cables (power and control) used on crane shall have XLPE/HR PVC, 1.1KV grade, heavy duty, copper conductors conforming to Indian Standards.

Minimum size of power cable on crane shall be 4.0 mm^{2}copper.

Fixed cables from Control panels to JBs of motors/fixed motors shall be 3.5/4 core armoured, copper conductor of adequate size considering motor full load current (name plate current) and voltage drop. From Motor JBs to moving motors, power cables shall be 3.5/4 core, 1.1KV grade, heavy duty, flexible trailing cables using stranded copper conductors.

© 2022 MECON Limited All rights reserved

Wiring from Control panels to fixed field devices/brakes/switches/light fittings/socket outlets etc. shall be done with XLPE/HR PVC, 1.1 KV grade,multi core, stranded,copper conductor of 2.5 sq.mm. 20% spare cores with minimum 1 core shall be provided in each control cable. Control cables from Fixed JB to moving filed devices shall be multi core, 1.1KV grade, heavy duty, flexible trailing cables using stranded copper conductors of 2.5sq.mm. 20% spare cores with minimum 1 core shall be provided in each control cable.

All flexible trailing cables (i.e. cables for magnet, trolley, pendant unit etc.) shall have 1.1KV grade, heavy duty, copper conductor, EPR insulated and CSP (SE-4) sheathed or better All cables shall be supplied conforming to Indian standards.
All cable shall be suitably de-rated for grouping and higher ambient temperature.

All accessories like cable glands, clamps, pipes, wire and terminal marks etc. shall also be provided.

Cable laying and terminations shall be done considering mechanical protection to avoid cable damage.In all passages and on trolley, the cable shall be laid in trays and shall be covered by similar trays and properly clamped & fixed.

The cables for the VFD and associated equipment shall be laid and clamped separately on the crane.

All power, control & flexible cables from Control panels to filed JB/Motors/switches/light fittings/socket etc. shall be used from Preferred makes of Cables-GS-13.

For detailed specification of Cables, Cable chapter in GS-03, Part-1B shall be refered.

15.1.32 Earthing

A ring earthing system shall be provided on the crane. Each and every electrical equipment on the crane shall be earthed at least at two points. However, for electronic equipment,separate insulated earth wire system shall be provided and terminated to main earth ring. Further, the earthing/ringsystem shall be connected to the fourth trolley line in DSL system through 2 numbers of current collectors. Additionally, current collectors shall also be provided on crane rails for earthing on crane. All these collectors shall be connected to earthing ring.

An earth core shall be provided in trolley feed cable and the magnet. The cable reeling drum shall have a separate slipring for earthing purpose.

It shall conform to general specification for earthing.

Rubber mattings shall be provided in front of the protective and control panels.

All bonds between earth conductors and crane parts shall be welded if possible, or rivetted and soldered. Where screwed bonds are made, care shall be taken that there is satisfactory contact surface and nuts shall be locked to prevent their loosening. Earth connections to equipment shall be made by means of multi strand flexible conductor to adequate section.

The earth ring on the crane/ machine shall be connected to the plant earthing system through to gantry rails. Each end of each gantry rail shall be bonded to the plant earthing system.

In addition, intermediate earthing bond shall also be provided on the rails at every 60 m in case of longer tracks.

Flexible copper bonds shall be provided across any gap in the running gantry rail.

© 2022 MECON Limited All rights reserved

For mobile equipment with flexible cables, one separate copper conductor of adequate size shall be provided for earthing.

15.2 ELECTRIC HOIST

15.2.01 Scope of supply

Contractors scope of supply shall include the following:

- Bay Isolator (mounted in Box at man's height)
- Power cable junction box(fixed)
- Flexible festoon cable system with supporting rollers & guide rail for power cable or shrouded busbar arrangement as per mechanical clearance diagram.
- Electrical panel housing main power disconnecting MCCB, main line contactor, control transformer with MPCB on primary &DP MCB on secondary sides, individual MPCB, Power contactor, EOCR for individual motor control & set of power & control terminals.
- Drive motors
- Brakes
- Limit switches
- Power & control cables for fixed wiring & hoist unit
- Pendant control station with suspension / Control posts as per Clearance Diagram

15.2.02 Standards

The equipment shall be selected as per the guide lines provided in the latest edition of the relevant Indian Standards. The equipment shall also conform to the latest Indian Electricity Rules & Regulations as regards to safety requirements, earthing & other essential provisions specified therein.

15.2.03 Ambient conditions

All electrical equipment including cables shall be selected for an ambient temperature as applicable for the shop.

15.2.04 Power supply

Power supply : The power supply provided for the hoist shall be 415 V AC +/- 10%. Control supply shall be 110V AC through control transformer.

The different voltages mentioned above, other than 415 V, 3 phase, 50 Hz shall be obtained through individual separate transformers & transformer rectifier units connected to 415V.

© 2022 MECON Limited All rights reserved

Each transformer shall be provided with tapings at ± 5% &±10% on the primary. One pole of the central supply shall be earthed.

15.2.05Power supply collection & distribution

Incoming power supply (415V AC) from PDB shall be terminated at the sheet steel enclosed Isolator Box located at Bay. From bay Isolator,power supply shall be taken at the line side terminal of the sheet steel, dust proof cable junction box installed near hoist gantry in an accessible position. Contractor shall provide proper flexible festoon cable system or shrouded bus bar arrangement system as per mechanical clearance diagram to deliver the power supply to the electrical control panel of the hoist. Electrical control panel of hoist shall contain following equipment/devices:

a) A TPN MCCB isolator of adequate rating with O/C, S/C & E/F protections. The rating of the MCCB shall be sufficient to carry the combined full load currents of the hoist & travel motor.

b) A three pole main line magnetic contactor suitable to carry the combined full load currents of hoist & travel motor.

c) MPCB, Contactors & over load relays (EOCR) in the individual motor power circuit. The over load relays shall be self reset type.

d) Reversing contactors for individual motors. The rating of the contactors shall be atleast 50% higher than the respective motor full load current at the specified duty cycle. The minimum rating of the power contactor shall be 30 amps. It shall be heavy duty & of class AC-4 as per IS: 2959-1985.

e) Transformer & transformer rectifier set for control voltage supply & for supply to DC electro magnetic brakes respectively.

f) Speed control equipment as necessary.

The electrical control panel shall be sheet metal clad min. 2mm thick, totally enclosed(IP54) with hinged &casketed front door. Cable entry/exit shall be through double compression type cable glands.

15.2.06Pendant control station

All drive motors shall be controlled with individual magnetic reversing type contactors operated through momentary contact push buttons (mounted on pendant unit/ control posts. The push button shall return to the 'off' position as soon as the pressure is released. The release of the push button shall immediately & automatically cause the brake to clamp. In addition to the start up 'ON' push button, which energises the main contactor, one lockable Mushroom head, 'Em.OFF' push button shall be provided in the Pendant control station & shall be connected in the main contactor coil circuit. The push buttons shall be clearly marked as per the recommendations of IS:3938-1983 to indicate the function of each button. The pendant control station shall be provided with Control ON, Trip LED indication lamps and UP, down, Forward, reverse Push buttons. All push buttons shall be with 2NO+2NC contacts.

© 2022 MECON Limited All rights reserved

The weight of the pendant shall be supported independent of cable by means of PVC sleeved chain or wire rope. The pendant shall be effectively earthed.

The reversing contactors for individual motors shall be electrically & mechanically interlocked. The control scheme adopted shall ensure smoothed normal speed lowering/hoisting & travel as specified.

15.2.07Limit switches

Hoist travel motion shall be provided with limit switches to limit the ultimate positions of the hook & the hoist block.

The limit switches shall conform to the requirements specified in IS:3938-1983.

To prevent over hoisting, over lowering and excess travel, limit switches are to be provided as safety device. The hoist shall be equipped with cam operated rotary type limit switches with at least one spare contact for over-travel protection in hoisting & lowering direction. For excess hoisting, gravity type limit switch shall be provided as back up. For cross travel, lever type limt switch (2NO+2NC) shall be provided in both the direction.

Limit switch shall be of totally enclosed quick break type.

Hoisting and lowering limit switch shall be automatically reset when the hook is returned to the normal operating zone .

All the limit switch shall hve min. IP65 protection. Further it shall have 2NO +2NC contacts.

15.2.08Motors

Design and construction : Motors shall be of ac squirrel cage induction motor, TEFC/TESC, with high starting torque, suitable for S4 crane duty with frequent start & stop.

The motors shall be mounted such that gears and terminal boxes shall be accessible easily.

Rating and enclosure :

Rating of the motor shall be as per Mechanical Power calculation with minimum IP 54 protection .

Rating of motor shall be selected considering the CDF 25/40/60 % as per mechanical process requirement.

Speed : Maximum speed shall be 1440 RPM. The motor shall be single speed / double speed as per requirement of process/mechanical.

Insulation Class : Class of insulation shall be class F with temp rise limited to class B.

15.2.09Brakes

The hoist motor shall be equipped with a D.C. electromagnetic disc or shoe type brake as per mechanical GA drawing to bring the load to a smooth and quick stop and to hold the load when the hoist motor is not energized. The brake shall be adjustable, self re-setting.

The brake shall apply automatically when power fails/Power off or when the controller handle is brought to the off position.

© 2022 MECON Limited All rights reserved

Effective means shall be provided for stopping the motion in the event of a power failure and in case of an emergency.

15.2.10Cables

The cables for power connection on the hoist block upto electrical panel shall comprise multi-strand PVC insulated & sheathed, copper conductor, 1.1 KV grade cables. Solid or single strand conductor cable shall not be acceptable. The conductor sizes shall be selected after derating for the high ambient temperature, grouping & disposition of cables & keeping the voltage drop within the permissible limits. All cables shall have stranded copper conductors of 2.5 mm sq. size for control wiring and 4.0 mm sq. copper minimum size for power wiring. Festoon flexible cables for power & control applications shall have EPR insulation & CSP sheathing or better.

All cables shall be adequately protected against mechanical damage, radiant heat & oil.

15.2.11Power collection system

Power supply to the hoist unit shall be through flexible festoon cable system or shrouded type insulated bus bar system of adequate rating/size as per mechanical clearance diagram. In case of festoon cable, it shall be mounted on a retracting roller supports for the full length of the working zone parallel to the I- beam carrying the hoist unit. The retracting trolleys shall run on a separate supporting beam.

One end of the festoon cable shall terminate in main cable junction box at the extreme end of the I-beam. The other end shall terminate on to the main power disconnecting switch located in the control panel. The flexible trailing cable shall have ample length to cover full track length & shall be supported at suitable intervals by means of properly selected movable trolleys. These retracting rollers shall be prevented from bumping through suitable spacers so that undue stress is avoided on the cable. Similarly the trolleys shall be inter-connected through metallic drag chains to avoid pull on cables. Suspension of flexible cable system below the support rail shall be restricted to avoid mechanical damage & interference with operation. The shrouded bus bar system shall be insulated with different colour with galvalnised steel/aluminium/copper bus bars.

15.2.12Earthing

TN-CS type of earthing shall be provided. This would require a separate earth conductor in the power cables, both for fixed wiring as well as for flexible festoon cables.

16.0 ELECTRONIC WEIGHING & WEIGHING CONTROLLER SYSTEM

This section covers electrics for belt weigh feeders, loss in weigh feeders, load cell based bunker level measuring system (BLMS), belt weigh scales & Weighing hoppers.

1.0 GENERAL

1.1 Microprocessor based Individual Weighing Controller (IWCs) with digital display and keyboards

© 2022 MECON Limited All rights reserved

1.2 VFD drive for speed control of AC motors of belt weigh feeders/Loss in weigh feeders with necessary switchgears, incoming choke, output reactors if required, protective devices, communication links with IWC, input/output for remote start/stop, interlocking, indication lamps, controls, metering, potential free contacts for remote status indication like ON/OFF/TRIP/ converter fault (to be wired to PLCs), motor protective devices at field etc. Technical features of VFD drive shall be as per General specification for electrical system(GS-03).

1.3 Individual Belt Weigh feeder panels housing IWC (Intelligent weighing controllers) controller & VFD drive, DOL starters for vibrating hoppers interlocked with belt weigh feeders.

1.4 Microprocessor based Bin weight measuring panels with digital display and keyboards with auto taring and auto calibration facility. Bin Measurement panels housing IWC controller (IWC Controllers for more than one Bin can be combined in one panel.

1.5 Beltweigh scale panels housing microprocessor based measuring indicator with digital display and keyboards with auto taring and auto calibration facility.

1.6 Provisions for Communication with PLC / DCS.

Belt Weight feeder IWC, Bin weigh measuring controller & Belt Weigh Scale IWC shall be able to communicate all required parameters with PLC/DCS on the plant communication bus as selected (like Profibus DP) by successful turnkey contractor.

1.7 Load cells, tachogenerators, field junction boxes, limit switches etc. for Belt weigh feeders, Bin level measuring systems, Belt weigh scales (if any).

1.8 Common local control station for Belt weigh feeders & Vibrating hoppers (as applicable) housing Local /Off/Auto selector switches, Start/stop push buttons, speed increase/decrease, TPH indicators etc.

1.9 Local Indicator panels for Bin weighing control & Belt weigh scales

1.10 LT AC motors for belt weigh feeders & vibrating hoppers.

1.11 Calibration weights for belt weigh feeders.

1.12 Supply of dummy load cells for various Bunkers (BLMS system)

1.13 Features for Belt slip detection in case of weigh feeders, like tail end tacho or other suitable measures shall be provided by Tenderer.

2.0 DESIGN BASIS FOR BELT WEIGH FEEDER/LOSS IN WEIGH FEEDER

The weighing system shall be designed, manufactured, assembled and tested in accordance with relevant OIML/NTEP Standard . Equipment shall comply with statutory requirement of Weights & Measures Deptt., State Govt. and Govt. of India .
The equipment shall be of proven design, imported and reputed make.

The consistency of the feed rate shall be guaranteed within +/- 0.5% of the set value within the operating range of 10% to 100% of rated capacity.

© 2022 MECON Limited All rights reserved

The weighing control shall be totally automatic with close loop control. The feed rates of different materials shall be calculated by the computer and set points of Belt weigh feeder shall be set by the computer through PLC. In case of computer failure manual setting (remote manual) and operation of feeders shall be possible.

Load cell shall be globally reputed make, confirming to OIML/NTEP Standard and preferably digital type, side mounted and easily replaceable type.

Weighing system shall be mounted in the horizontal portion of the conveyor with multi idler/weigh carriage system.

Equipment shall be provided with anti sway, anti sagging and anti slip devices.

Auto zero track, annunciation and diagnostic facility shall be provided.

Surge, radiation, EMF & RF protection devices shall be provided.

Test weights for different range of calibration should be provided with each equipment.

3.0 CONTROLLER PANELS OF BELT WEIGH FEEDERS/LOSS IN WEIGH FEEDER PANEL

The IWCs for control of Belt weigh feeders/ LIWs shall be microprocessor based having automatic weighing and calibration facilities. The system shall be complete with protection against overloading. Accuracy of Belt weigh feeders shall be +/-0.5% or better of preset feed rate.

It shall be possible to operate the Belt weigh feeders under the following modes:

Local - Volumetric
Local - Gravimetric
Remote - Gravimetric (remote manual/PLC automatic)

Under remote mode of operation, following control shall be possible.

Remote - From IWC panel
Remote- From HMI station at individual shop control room.

Microprocessor shall be provided with each IWC as per standard design/ system requirement. IWC shall generate signal for material feed rate in t/hours. The IWC shall compare the actual feed rate with the set point feed rate and generate a suitable correction for the VVVF converter of belt drive. The signal shall change the belt speed and accordingly provide the desired feed rate. It shall be complete with auto calibration, auto tare, auto belt slip/ drift monitoring facilities etc. The stored values after calibration shall not change due to power failure.

Belt Weigh feeder panel housing above IWC & VFD drive shall also be provided with following control equipment /facilities and shall be kept in air conditioned electrical room.

- Main incoming MPCB/MCCB (50kA) for incoming power supply
- Control transformer (415/240V) with MPCB (50kA) at primary, MCBs at secondary.

© 2022 MECON Limited All rights reserved

- MPCB, Power contactor (min. 25A), thermal overload relay, necessary auxiliary contactors, ON/OFF/TRIP indication lamps for each motor of bin vibrating hoppers.
- Necessary Power supply units, conversion equipment.
- DP MCBs for incoming UPS power supply and its distribution to all panels.
- Panel illumination lamps (fluorescent tubular).
- Start/stop push button, selector switches as required.
- Power ON indication.
- Power and control terminals.

The IWC shall have following features (minimum)

- Actual flow rate indicator.
- Set rate feed indicator.
- Totalised amount indicator.
- Belt load indicator.
- Belt speed indicator.
- Deviation indicator.
- Fault messages (separate lamps).
- Operational mode selector switch for gravemetric/volumetric/calibration/ Automatic and Constringency mode selection.
- Auto taring & calibration.
- Load cell/Tacho filter time
- No motion alarm set.
- Material starvation signal
- Load sensor break
- Material over/under load alarm
- Gravimetric / volumetric deviation alarm
- Proportional band, Integral time, Derivative time (for Gravimetric/ volumetric mode) for PID.
- Tantalizer value
- Tare value
- Load electrical value
- Speed electrical value

Following displays and messages shall be possible for all the operating and calibrating functions:

- Set point.
- Normal/Maintenance/Calibration modes.
- Actual feed rate.

© 2022 MECON Limited All rights reserved

- Belt load (Platform load).
- Belt speed.
- Totaliser value.
- Deviation error between set and actual feed rate.
- Service data such as measured value, controller output, control signal level etc.
- Event messages/fault messages.

The above shall be available on each IWC on digital display unit in central control room. Display and messages listed above shall also be made available on VDU of PLC/DCS.

Panel Construction features.

- Floor mounted, free standing.
- Dust and vermin proof.
- CRCA sheet steel clad.
- Minimum 2.0 mm thick for panels.
- Suitable to withstand vibrations to be encountered in steel plant applications.
- Cubicles with illumination lamps door switches, space heaters and adequate sockets for soldering.
- All control blocks plug-in-type with necessary test sockets.
- Units shall be self contained and serviceable.
- Power wiring-Min 2.5 sq.mm. Cu
- Control wiring – Min 1.5 sq.mm. Cu
- The panel door shall be provided with toughened glass in front of controllers for viewing of display units without opening the panel door. All control devices and indicators shall be mounted on the front. Two numbers earthing studs shall be provided with the panel for external earthing. All power, control, and signal terminals of different voltages shall be segregated. 20% spare terminals shall be provided in the panel.

4.0 BIN/WEIGH HOPPER LOAD CELLS AND LEVEL MEASURING SYSTEM:

Design Basis for Bin Level Measuring System

Equipment shall comply with statutory requirement of Weights & Measures Deptt. of Govt. of India.

Load cell shall be of globally reputed make, confirming to OIML/NTEP Standard & preferably digital type. Load cell shall be easily replaceable type, provided with safely devices from impact load, vibration and lifting arrangement facility. Lightning & Surge protection devices shall be provided in load cells, JBs, electronics & main electrical power supply.

Load cells shall be of high precision strain gauge type, hermetically sealed, robust in design, shock proof and insensitive to overload, temperature, vibration, electrical noise etc. Enclosure class shall be IP 67 / IP 68 .

Load cell shall be provided with ambient temperature compensating device upto 55 deg. C.

Provision shall be kept to neutralise the error caused due to application of transverse forces.

© 2022 MECON Limited All rights reserved

Max. Measurement error permitted is +/- 1%

Weighing system shall have auto zero & auto calibration facilities.

Test weight for calibration shall be provided.

5.0 CONTROL PANEL FOR BIN LEVEL MEASUREMENT (BLMS)HOUSING IWC

Bin level measurement system shall be microprocessor based having automatic weighing, taring and necessary calibration facilities. The system shall be complete with protection against overloading. Accuracy of weighing +/-0.1% or better.

The controller shall have digital display and keyboards, indication, alarm, annunciation etc. It shall be complete with auto calibration, auto tare facilities etc. The stored values after calibration shall not change due to power failure.

The controller shall be complete with built in power supply unit, CPU, program memory, A/D & D/A converters, etc. The above shall be of modular design using standard PCBs and connectors.

It should communicate actual weight/level, conditions for bin empty, level low, level high etc to Automation system.

One no. large display unit for outdoor display shall be provided.

6.0 BELT WEIGH SCALES

The IWPs for control of belt weigh scales shall be microprocessor based having automatic weighing and necessary calibration facilities. The system shall be complete with protection against overloading. Accuracy of belt weigh scale shall be +/-0.25% or better of flow rate.

Microprocessor as per standard design/ system requirement shall be provided each IWC. Microprocessor shall multiply load cells and conveyor speed signal in digital form to generate signal for material conveying rate in T/Hours(TPH). It shall be complete with auto calibration, auto tare etc. The stored values after calibration shall not change due to power failure.

The following displays and messages shall be available for all the operating and calibrating functions:

- Conveying rate in TPH.
- Belt load (Platform load)
- Belt speed.
- Totaliser value.
- Service data such as measured value, controller output, control signal level etc.
- Event messages/fault messages.
- Auto taring & Error corrections.

The above shall be available on each IWC on digital display unit. Display and messages listed above shall be made available on VDU of in central control room.

Panel Constructional feature

© 2022 MECON Limited All rights reserved

Shall be same as for Weigh feeder panels.However, wall mounted panel may also be considered.

7.0 DIGITAL TACHOGENERATORS

It shall be of robust construction and designed to give guaranteed accuracy of feed rate. It shall generate consistent output pulses of positive or negative polarity as applicable by accepting shaft rotation. The output pulses shall be suitable for feeding into high impedance electronic circuit/instrument for digital measurement and control. The enclosure class shall be IP 67. It shall be provided with ambient temperature compensating device.

Arrangement of mounting of tachogenerators and its coupling with AC motor shall be decided considering ease of maintenance.

8.0 LOCAL CONTROL BOX (LCB) FOR BELT WEIGH FEEDERS/LOSS IN WEIGH FEEDER & LOCAL INDICATION BOXES FOR BLMS & BELT WEIGHERS.

Each belt Belt weigh feeder/Loss in weigh feeder shall be supplied with a local box with following features:

- Sheet steel (2.0mm thick) construction.
- Wall/ structure mounted type.
- Hinged door, dead front type.
- Enclosure class IP-55.
- To be painted as per standard procedure agreed.
- Internal wiring with 1.5 sq.mm copper conductor.
- The box shall be wall/structure mounted type and be complete with cable glands and lugs.

- The LCB shall be provided with the following :
  - Local – Off – Remote selector switch.
  - Start/Stop push buttons
  - Emergency stop push button (press to lock turn to release type)
  - Increase/decrease PB for speed setting
  - Feed rate actual (TPH meter – digital type).
  - Start/stop push button for bin vibrator
  - Indication lamps.
  - Any other device required for satisfactory operation of BWFs to be decided during detailed engineering.

- Each local indication box for BLMS/Weigh Scales shall have digital indication of Bunker level/feed rate(TPH).

9.0 LOAD CELLS

© 2022 MECON Limited All rights reserved

- Load cell shall be imported reputed make as per OIML / NTEP standards with surge protection.
- Compression type.
- Enclosure class IP 67 / IP68
- Hermetically sealed, stainless steel precision strain gauge / digital type.
- Maximum usable load: 200%
- Destruction load: >500%
- 300% over load capacity.
- Suitable for maximum 70ºC.
- Temperature compensation range: - 40°C to 70°C
- Capacity of the Load cell shall be as per mechanical/technological requirements. However, final rating of load cells shall be such that load cell can provide for accurate measurement upto 150% of the rating calculated as per mechanical/technological requirements.
- Load cell accuracy 0.04%
- Combined error: ± 0.03%
- Excitation: 10 to 50 V dc
- Zero balance: ± 1% of R.O.
- Insulation resistance: >5000MΩ
- Complete with excitation source, transmitter, amplifier, junction boxes, special cables, etc.

17.0 CABLES

17.01 HT XLPE POWER CABLE (3.3 kV to 33 kV Grade)

A.	**Applicable Standards** List is given below, latest revision/ version of standard applicable during engineering shall be followed.	
	Standard	**Description**
1	IS–7098-Part-II, 2011	Specification for Cross-linked polyethylene insulated PVC sheathed cables – Part–II: For working voltage from 3.3kV upto and including 33kV.
2	IS: 8130 – 2013	Conductors for insulated electric cables and flexible cords.
3	IS: 5831 – 1984	PVC insulation and sheath of electric cables.
4	IS: 3975 – 1999	Low carbon galvanized steel wires, formed wires, and tapes for armouring cables.
5	IS: 10418 – 1982	Drums for electric cables
6	IS: 10462 (part-1) – 1983	Fictitious calculation method for determination of dimensions of protective covering of cables: Part-I Elastomeric and thermoplastic insulated cables.
B.	**Technical Particulars**	

© 2022 MECON Limited All rights reserved

	Description	Requirement
1.	Voltage grade	As per system requirement & CTS
	Application suitability	Suitable for laying in trays, trenches, ducts and conduits and for underground buried installation with backfill and possibility of flooding by water and chemicals.
2.	Conductor	Stranded and compacted circular aluminium (AL) conductor of grade H2 or H4 & class 2 as per IS.8130
3.	Conductor Screen	Non-metallic extruded semi-conducting compound. (Min thickness 0.3 mm)
4.	Insulation	Extruded cross-linked polyethylene (XLPE) as per IS-7098. The insulation and sheath materials will be resistant to oil, alkali and will be strong enough to withstand the mechanical stresses during installation.
5.	Insulation Screen	Non-metallic extruded semi-conducting compound. (Min thickness 0.3 mm).
6.	Extrusion process	The conductor screen, XLPE insulation and insulation screen shall all be extruded in one operation to ensure perfect bonding between the layers.(Triple extrusion process)
7.	Curing process for triple extruded core	Dry curing in CCV or VCV line
8.	Metallic Screen	Wrapped copper screen together with semiconducting tape over semiconducting insulation screen. Overlapping shall be min 10%. Calculation in support of selection of the size of copper screen shall be submitted during engineering
9.	Copper Screen rating	1kA for 1 Sec.(3 phase together for 3 core and each phase for single core)
10.	Inner Sheath	Extruded PVC compound confirms to ST-2 as per IS-5831 over laid up cores stranded together with holding tape and necessary fillers. For single core cables, there shall be extruded inner sheath between insulation metallic screen and armouring
11.	Armour	Galvanized steel strip armour as per IS-3975 for 3 core cable For single core cables, the same shall be with hard drawn aluminium round wire.
12	Outer Sheath	Extruded FRLS PVC compound confirming to ST-2 as per IS-5831,

© 2022 MECON Limited All rights reserved

		Black in colour and suitable chemicals will be added into the PVC compound of the outer sheath to protect the cable against rodent and termite attack
13	Length & ISI Marking	Sequential marking of the length of the cable in meters and ISI marking will be provided on the outer sheath of the cable at every one meter. The embossing / engraving will be legible and indelible
14	Core Identification	With coloured strips or by numerals applied on core in line with IS - 7098.
15	Drum type	Steel Drum. Steel drums of suitable barrel diameter, securely battened and sufficiently strong to withstand shocks. It shall effectively protect the cables during transit. Both ends of the cables shall be accessible for testing purpose
16	PVC / Rubber end caps	To be supplied for each drum with a minimum of eight per thousand meter length. In addition, ends of the cables will be properly sealed with caps to avoid ingress of water during transportation and storage.
17	Special Requirement	FRLS PVC Outer Sheath with UV protection and anti rodent
18	FRLS Cable (if spercified)	**FRLS cables shall also meet the requirements as listed specifically for FRLS cables in subsequent clauses.**

SN	Requirement	Value
1	Oxygen Index as per ASTMD-2863	minimum 29
2	Temperature Index as per ASTMD-2863	minimum 250^{0}C
3	Smoke density as per ASTMD-2843	minimum average light transmission of 40 %
4	Acid gas generation limit as per IEC 60754-1	Hydrochloric acid gas release, maximum 20% by weight
5	Ignition resistance and flame propagation	conform to IEC 60332-1
	Fire resistance test	conform to IS 5831
6	Flammability test	conform to IEEE 383
7	flammability test on group of cables	Confirm to IEC 60332-1

© 2022 MECON Limited All rights reserved

8	Swedish chimney test	Confirm to SS-424-14-75 class F3
D	**Documentation**	
	For Approval	Guaranteed Techncial Particulars (GTP)
	For Reference	1) Cable cross section with label 2) Cable Drum Diagram 3) Fictitious calculation

1) Water swellable tape shall be considered additionally at appropriate layer for cables directly buried in ground.

2)

17.02 1.1kv GRADE XLPE LT POWER CABLE

Sl.No.	Parameter	Description
1.0	Voltage Grade	1.1 kV grade
2.0	Duty type	Heavy duty
3.0	No. of cores	- As per application & design basis in Section – A
4.0	Neutral Conductor	- For conductor size beyond 50 sq.mm, the fourth core used as neutral conductor shall be of reduced size as per IS: 7098 part-I.
5.0	Reference standard	IS:8130 – 1984 IS:5831 – 1984 IS:3975 – 1988 IS:3961 (Part-II) - 1967. IS:7098 Part-I
6.0	Conductor type (Material, Size & Shape)	- Copper conductor – Min Cross sectional area 2.5 sq mm. - Aluminium conductor- Min Cross sectional area 6sq mm. - All power cables shall have compact **circular** stranded (rm/V) or circular stranded (rm)

© 2022 MECON Limited All rights reserved

		conductors as applicable. - The conductors shall be class – 2 - The Aluminium conductor shall be H2 or H4 grade.
7.0	Standard Sizes	- Power cables shall be selected from core sizes of 2.5, 4, 6, 10, 16, 25, 35, 50, 70, 95, 120, 150, 185, 240 sq.mm (Aluminium conductor).
8.0	Insulation type	- XLPE insulation. - The insulation compound shall be conforming to IS:7098 (Part I) - 1988.
9.0	Inner sheath	- For armoured / unarmoured cables extruded,PVC, Type ST2 as per IS 5831. - Black in colour.
10.0	Armour	- Galvanised steel round wire armour / Galvanised flat steel wires (strips) armour as applicable as per IS:7098 (Part I) 1988 - Single core armoured cables shall be provided with non-magnetic armour consisting of hard drawn round aluminium wires.
11.0	Outer sheath	- For armoured/ unarmoured cables a tough outer sheath of PVC compound (Type ST2 as per IS 5831) . - Black in colour .
12.0	Temp. rise	Shall be limited to 90 deg.C.
13.0	Cable & Core identification	Cable identification shall be provided by embossing on the outer sheath the following: ➢ Manufacturer's name & trade mark ➢ Voltage grade ➢ Year of manufacture ➢ Type of insulation ➢ R, Y, B for phases. ➢ Black for neutral (fourth core)

17.03 1.1 kV GRADE PVC CONTROL CABLE

Sl.No.	Parameter	Description
1.0	Voltage Grade	1.1 kV grade

© 2022 MECON Limited All rights reserved

2.0	Duty type	Heavy duty
3.0	No. of cores	As per requirement.
4.0	Reference standard	IS:8130 – 1984 IS:5831 – 1984 IS:3975 -1988 IS:1554, part - 1, 1988 IS:3961 (Part-II) - 1967.
5.0	Cross sectional area	Shall be 1.5 / 2.5 sq.mm.
6.0	Conductor type	Annealed circular stranded copper conductor.
7.0	Insulation type	PVC Type- C insulated
8.0	Inner and outer sheath	- Type ST-1 PVC shall be used for inner sheath - Type ST-2 PVC shall be used for outer sheath. - Both inner and outer sheath shall be extruded type.
9.0	Armour	- Galvanised steel round wire armour.
10.0	Spare Cores	- Refer Section – A, Design Basis
11.0	Cable & Core identification	- Cable identification shall be provided by embossing on the outer sheath the following: ➢ Manufacturer's name & trade mark ➢ Voltage grade ➢ Year of manufacture ➢ Type of insulation - Cores of the cables upto 5 cores shall be identified by colouring of insulation. - For cables having more than 5 cores, core identification shall be done by numbering insulation of core sequentially. - All the numbers shall be of same colour, which shall contrast with the colour of insulation. - Numbers shall be written in figures and words both. - The numerals shall be legible and indelible. - The numbers shall be repeated at regular intervals along the core, consecutive numbers being

© 2022 MECON Limited All rights reserved

		inverted in relation to each other. - When number is a single numeral a dash shall be blacked underneath. - If the number consists of two numerals, these shall be disposed one below the other and a dash placed below the lower numeral. - The spacing between consecutive numbers shall not exceed 100 mm.

Screen cable/ Special cable should match with instrumentation TS. Either It can be copied or it can be referred to instrumentation part which is also part of GS-03.

17.04 1.1 KV GRADE SCREENED /SPECIAL CABLE

Sl.No.	Parameter	Description
1.0	Voltage Grade	1.1 kV grade.
2.0	Duty type	Heavy duty.
3.0	No. of cores	As per requirement.
4.0	Cross sectional area of conductor & Armouring	- Shall be 1.5 sq.mm& Armoured. - For Load cell minimum 1.0 sq mm un-armoured cables in GI conduit from field JB to controller panel shall be provided.
5.0	Conductor type	- Annealed circular stranded copper conductor. - For twisted pair cables, the conductors shall be of stranded tinned copper having proper flexibility to provide limpness and extended flex-life as required for these small diameter cables.
6.0	Insulation type	- PVC insulated, Type A. - Type ST-1 PVC shall be used for inner sheath. - Both inner and outer sheath shall be extruded type. - Outer sheath made of CSP, abrasion resistant, oil resistant and flame retardant conforming to IS:434 –1964 (Part - I), as amended upto date.
7.0	Screen	- Tinned annealed copper mesh over metallised tape, in a close woven braid.
8.0	Shielding	- Special aluminium foil to provide 100% shield coverage for optimum protection against radiated interference and ingress of audio and radio

© 2022 MECON Limited All rights reserved

		frequencies. - It shall have shorting fold for metal to metal contact and isolation fold to prevent adjacent shields from shorting to one another, so as to improve the voltage breakdown characteristics. The drain wire shall be of stranded tinned copper wire of 0.518 sq. mm. (20 AWG) cross-section.
9.0	Spare Cores	20% spare cores but not less than 2 spares shall be provided in all the multi core cables.
10.0	Reference standard	As per relevant IS with latest amendments
11.0	Miscellaneous	- The Tenderer shall furnish necessary calculations to show that the selected cable satisfy the criteria including for voltage drop. - Cables for temperature detectors shall be screened type of required technical parameters with core size not less 1.5 sq.mm. - The special twisted paired cables shall be of the type to provide balanced signal transmission and shall have good noise immunity.
12.0	Core identification	- Cable identification shall be provided by embossing on the outer sheath similar to as mentioned in 1.1 kV PVC Control cables above. - Cores of the cables upto 5 cores shall be identified by colouring of insulation. - For cables having more than 5 cores, core identification shall be done by numbering insulation of core sequentially. - All the numbers shall be of same colour, which shall contrast with the colour of insulation. - Numbers shall be written in figures and words both - The numerals shall be legible and indelible. - The numbers shall be repeated at regular intervals along the core, consecutive numbers being inverted in relation to each other. - When number is a single numeral a dash shall be blacked underneath. - If the number consists of two numerals, these shall be disposed one below the other and a dash placed below the lower numeral. - The spacing between consecutive numbers shall not exceed 100 mm.

© 2022 MECON Limited All rights reserved

17.05 SILICONE RUBBER INSULATEDHEAT RESISTANT CABLE

Sl.No.	Parameter	Description
1.0	Voltage Grade	1.1 kV gradeconfirming toIS: 9968 (Part-I)- 1988
2.0	Reference standard	IS: 6380
3.0	Duty type	Heavy duty
4.0	No. of cores	Single or multicore as per requirement
5.0	Cross sectional area	As per requirement .
6.0	Conductor type	Annealed tinned copper conductor
8.0	Insulation type	Silicone rubber insulation
9.0	Shielding	Asbestos or glass braid and lacquered protection
11.0	Outer sheath	Flame retarded Oil resistant
12.0	Miscellaneous	As per requirement for working at higher temperature, nickel coating shall be done .
13.0	Armouring	GI strip armoured as per requirement (as specified in respective TS)

17.06 FLEXIBLETRAILING CABLE

Sl.No.	Parameter	Description
1.0	Voltage Grade	1.1 kV grade confirming to IS: 9968 (Part-II)- 1988
2.0	Reference standard	IS: 9968 IS: 8130 IS: 6380
3.0	Duty type	Heavy duty
4.0	No. of cores	Single or multicore as per requirement
5.0	Cross sectional area	As per requirement.
6.0	Conductor type	Highly flexible stranded tinned annealed high conductivity copper conductor.

© 2022 MECON Limited All rights reserved

8.0	Insulation type	EPR (Ethylene-propylene Rubber) For higher temperature zone, silicone rubber.
9.0	Shielding	Each individual core protected and covered and overallshielded.
11.0	Sheath	Poly-chloroprene rubber or chlorosulphoratedpolyethelene cable shall be conform to IS: 9968 (Pt-I) - 1988. Flame retarded (for higher temperature area). Oil resistant.
12.0	Miscellaneous	Shall have one additional core for earthing.
13.0	Armouring	GI wire armoured as per requirement and size (as specified in respective TS).

17.07 PROPERTIES FOR FLAME RETARDANT LOW SMOKE (FRLS) CABLES

Sl.No.	Parameter	Description
Following properties shall be included for cables, wherever FRLS cable is specified in TS		
1.0	Reference standard	Category AF as per IS : 10810 ASTM-D 2863 (Critical Oxygen Index) ASTM-D 2863 (Temperature Index) ASTM-D 2843 (Smoke density) IEC 754-1 (Acid gas generation) IEEE-383 (Flammability test on group of cables) Swedish chimney test SS 424175, class F3. (Flammability test) IEC 332-1 (Flammability test) IEC 332-3 (Flammability test) IS 5831 (Fire resistant test)
2.0	Sheath	Specially designed with thermoplastic or thermosetting materials , superior resistance to ignition and flame propagation with smoke emission and toxicity or corrosive characteristics Flame retarded Oil resistant

© 2022 MECON Limited All rights reserved

3.0	Test values	
1	Oxygen Index as per ASTMD-2863	minimum 29
2	Temperature Index as per ASTMD-2863	minimum 250^0C
3	Smoke density as per ASTMD-2843	minimum average light transmission of 40 %
4	Acid gas generation limit as per IEC 60754-1	Hydrochloric acid gas release, maximum 20% by weight
5	Ignition resistance and flame propagation	conform to IEC 60332-1
	Fire resistance test	conform to IS 5831
6	Flammability test	conform to IEEE 383
7	flammability test on group of cables	Confirm to IEC 60332-1
8	Swedish chimney test	Confirm to SS-424-14-75 class F3

© 2022 MECON Limited All rights reserved

18.0 ILLUMINATION

1.0 General

The lighting system inside and outside plant units shall be designed based on the desired minimum illumination levels specified below. Where the areas are not indicated below but are required, lux level recommendation by latest issue of Indian Standards IS:-3643(Part-1)-1992 & IS6665-1972shall be followed.

For all high rise buildings/in high bays, walkway shall be provided for maintaining light fittings. At other places suitable ladder/platform/approach shall be provided for maintaining/replacement of light fittings.

IS 16105-2011 shall be followed for all LEDs /Fittings. Whereas for the other light fittings IS-3646 & national lighting code shall be followed.

2.0 The minimum level of illumination, type of fittings, maintenance factor to be considered is as given below:

Sl.No.	Area	Type of Light Fittings& Lamps	Lux level (min)	MF
1	Control rooms	Decorative type luminaire fixture with diffuser for recessed mounting with energy efficient LED lamps (Philips Type RC240B LED36-4000 PSE-OD WH or equivalent)	300	0.75
2	Electrical rooms having HT Panels, HT MCCs, PCC, PDB, MLDBs, CMCC without false ceiling	Surface mounted/Suspended luminaires with energy efficient LED tube. (Philips type SP824P LED 36-4000 PSE W30L120 OD GR OR equivalent.	200	0.7
3	Electrical rooms having IMCC, VFD panels, PLC, UPS with false ceiling	Decorative luminaire for recessed mounting with energy efficient LED lamp (Philips type RC869B LED 36-4000 PSE W30L120 D6 GR OR equivalent).	200	0.7
4	Office buildings, Office rooms, Conference rooms, Library, Lab buildings, Computer centres, Management buildings, without false ceiling	Surface mounted/Suspended luminaires with energy efficient LED tube. (Philips type SP824P LED 36-4000 PSE W30L120 OD GR OR equivalent.	300	0.75
5	Office buildings, Office rooms, Conference rooms, Library, Lab buildings, Computer centres, Management buildings, Officers/GM/ED/MD rooms with false ceiling	Decorative luminaire for recessed mounting with energy efficient LED Lamps (Philips type RC869B LED 36-4000 PSE W30L120 D6 GR OR equivalent).	300	0.75
6	Co-oriddors without false ceiling	Surface mounted/Suspended luminaires with energy efficient LED tube. (Philips type SP824P LED 36-4000 PSE W30L120 OD GR OR	200	0.75

© 2022 MECON Limited All rights reserved

		equivalent.		
7	Co-oriddors with false ceiling	Decorative luminaire for recessed mounting with energy efficient LED Lamps (Philips type RC869B LED 36-4000 PSE W30L120 D6 GR OR equivalent).	200	0.75
8	Battery Room	General purpose batten luminaire with energy efficient LED tube (Philips type BN208C LED40/NW L1200 FR with AC208C MB S (mounting bracket) OR equivalent).	100	0.6
9	Transformer Room, Civil Staircases of plant buildings	General purpose batten luminaire with energy efficient LED tube (Philips type BN208C LED40/NW L1200 FR with AC208C MB S (mounting bracket) OR equivalent).	100	0.6
10	Staircases (steel) of plant complex and cable tunnels/ cellars/ Overhead cable galleries	Industrial well-glass integral type luminaire with LED lamps (Philips type BY200P LED 27S CW PSU S1 PC OR equivalent).	70	0.6
11	Pump house, Stock House/Cooling towers, hydraulic cellers, (Having height less than 8mtr)	Industrial well-glass integral type luminaire with LED Lamps (Philips type BY200P LED 27S CW PSU S1 PC OR equivalent).	200	0.5
12	Flood lighting	Weather proof flood light fittings with LED Lamps of Philips TEMPO LED or equivalent..	70	0.5
13	Main Technological areas/platforms/ Bays/Process aras/Operational areas like Casting Bays, Fan buildings, Sinter Machine platforms, BF Cast House etc, Work Shops, Central Stores, Repair shops, Pump house, Stock House/Cooling towers, hydraulic cellers, etc. (Having height 8mtr or more)	High bay/Medium bay integral type light fittings with LED Lamps (Philips type BY688P LED 140 NW/CW PSD wide beam /narrow beam as per requirement or Crompton Model No. LHBBX- 150-CDL OR equivalent).	200	0.5
14	Platforms of all Technological areas, Plat forms of Stoves, BF platforms, MND areas, screens houses, crushers houses, weigh feeder platforms, wind boxes platforms, ESP Platforms, ETP, Thickner platforms, Cable Tunnels, Cable Floors/Cable basements etc.	Industrial well-glass integral type luminaire with LED Lamps (Philips type BY200P LED 27S CW PSU S1 PC or Crompton OR equivalent).	150	0.5

© 2022 MECON Limited All rights reserved

	(Having height less than 8mtr)			
15	Conveyor Galleries/ Junction houses/Over head covered cable galleries, covered pipe racks,	Industrial well-glass integral type luminaire with LED Lamps (Philips type BY200P LED 27S CW PSU S1 PC OR equivalent).	100	0.5
16	Toilets/Wash place, Store,	General purpose batten luminaire with energy efficient LED tube (Philips type BN208C LED40/NW L1200 FR with AC208C MB S (mounting bracket) OR equivalent)..	100	0.6
17	Aviation obstruction	Aviation obstruction light fittings, flame retardant type LED module, without flashing module, steady in red colour, having omni directional capability and shall be suitable to deliver maximum light output in the zone between 70° above and 10° below the horizontal with a maximum of condition at 20° above the module. Philips type XGP 400 1xLED – K2/RD 240 V OR equivalent.		
18	Plant Roads	Street light luminaire with LED Lamps (Philips GreenlineXtra OR Equivalent)	30	0.5
19	General Area lighting	30mtr./ 20 mtrHight Mast with LED Lamps	30	0.6
20	Hazardous Areas	Flame Proof, HPSV Lamps	Lux level as described above	As per above
21	Areas Having Acid Vapours	LED Lumminaire, enclosed type linear polycarbonate Philips type WT550C LED35S CW PSU SI PC or equivalent.	100	0.5
22	Scale fume tunnel	24V Bulk head with LED, IP65	100	0.5
23	Lawns, Garden, Landscape Lighting	LED Post Top	1 number at interval of 5m.	
24	Auditoriums, Conference Halls, Entrance lobbies, Control rooms, Computer centres, Training Centres, Officers/GM/ED/MD rooms	LED fitting Philips Type GreenSpace/GreenLEDi/LUXSpace HE or equivalent.	Suitable numbers to be provided for aesthetic in addition above at Sl.No.5.	

Note:- Wattage of LED Lamps shall be decided so as to provide minimum Lux level specified against each area/premises.

© 2022 MECON Limited All rights reserved

3.0 Area Lighting:-

External area lighting including street/road lighting / High Mast lights shall be fed from Out door type Feeder Pillar located at suitable places. Automatic switching ON/OFF of these circuits shall be done through timers. Street light/High mast/Flood light towers shall be fed through 415/240V, 3 phase, 4 wire circuit with individual fittings distributed at 240V, single phase, with control and protection located at bottom of each tower. DP MCB in a sheet steel box shall be provided near each fitting to facilitate removal of lamp in off position.

For Mining areas & Beneficiation/any Process Plant at Mining area, 240V, single phase, 50 Hz, AC lighting obtained through suitable transformers with secondary midpoint earthed.

4.0 Lighting Power distribution

The distribution of lighting power supply for the individual areas shall be done at 415V, 3 phase, 4 wire bus system through Main Lighting Distribution Boards (MLDB) for the area. **The Each incomer of MLDB shall be fed through separate lighting transformers.**Adequate numbers of MLDBs shall be provided considering the layout. Atlease one MLDB shall be provided in each LT Su-station building. The outgoing feeders of the MLDB shall feed the required numbers of Sub Lighting Distribution Boards (SLDB) for lighting. Each SLDB shall receive power at 415V AC, 3 phase, 4 wire and distribute it into 240V, 1 phase circuits for connection to the lighting fixtures and 240V receptacles. The SLDBs shall be located in the rooms, bays, shop units, junction housesetc preferably near entry/exit. covering the respective zone. The SLDBs shall be located in the electrical rooms in the respective area.

For Mining areas & Beneficiation/any Process Plant at Mining area, each incomer of MLDB is not required to be provided with separate isolating lighting transformer. However, 415V/240V transformers with secondary midpoint earthed having 30% spare capacity (minimum 25kVA rating) shall be provided with each outgoing feeder of MLDB to feed each SLDB. The transformer shall be panel mounted with IP42 enclosure, dry type, class F insulation located either in field or in Electrical room

Following guidelines shall be followed for designing the Lighting Power distribution system:-

a) All Control rooms, office rooms/buildings, Conference rooms, Laboratory buildings, Computer buildings, Management buildings, Data centres, Administrative buildings shall be provided with concealed wiring with modular type switch boards flushed with wall with switch socket points for controlling each point (light/socket). Each light fittings, fan points, socket points shall have separate piono switches for ON/OFF. All rooms of these buildings shall be provided with adequate numbers of 5/15A switch socket points.

b) Electrical Panel rooms/buildings, Cable floors, light fittings shall be made ON/OFF through SLDB out going feeder DP MCB directly. In this case, all fittings in one circuit shall be made ON or OFF. However, any office rooms, shift office, store rooms, toilets, wash place, pantry etc. with these buildings, light fittings, fan points, socket points etc. shall be controlled through Switch board piono switches individually.

c) In case open type Technological areas/premises (open to sky type without shed/cover/roof/side sheeting), incomer of SLDB shall be provided with Power contactor with Timer and auto manual provision for ON/OFF of light fittings.

© 2022 MECON Limited All rights reserved

d) In case covered Technological areas, Cable tunnels(not open to sky type but covered with shed/cover/roof/side sheeting), incomer of SLDB shall need not be provided with Power contactor with Timer and auto manual provision for ON/OFF of light fittings. In this case, light fittings shall be made ON/OFF directly through incomer MCB or through out going MCB.

e) In case Area lighting, Road lighting, High Mast lighting, incomer of Feeder Pillar/SLDB shall be provided with Power contactor with Timer and auto manual provision for ON/OFF of light fittings.

f) Number of SLDBs shall be planned judiciously for ease of control of light fittings. Generally, one SLDB shall be provided for maximum of two floors/platforms of any building/shop/units. However, for smaller size floors/plat forms one SLDB can be used for more than two floors/platforms, case where platform/floor sizes/heights are small and considering convenience of ON/OFF of light fittings from SLDB.

In case of Electrical buildings, control rooms, Lab buildings, Office buildingsetc. each floor shall be provided with one SLDB located near exit/stair case. In case one SLDB is considered due to smaller area, then power from SLDB shall be taken to DP MCB DB Box mounted on the floor from where power shall be fed to each.

Each circuit of SLDB shall be connected with maximum of 1000W load.

5.0 Emergency lighting

Dedicated &separate Emergency lighting MLDBs&SLDBs shall be provided for indoor & outdoor areas as per requirement to feed emergency lighting circuits.

Emergency MLDBs shall be fed through alternate source of power (emergency source) as defined in TS so that in case of failure of normal power also the Emergency SLDBs can be powered & Emergency lights can continue to glow. 20% lights shall be connected through Emergency SLDBs

Portable Emergency lighting including built-in battery, battery charger & lamps shall be provided in strategic areas like control rooms, staircases, entry of cable tunnels/basements, escape routes, etc. for safety.

6.0 Maintenance lighting

For maintenance lighting, power supply shall be fed from 240/26.5V small capacity step-down transformers to the 24V socket outlets.

7.0 Outdoor lighting

Flood lights for area lighting shall be mounted High Mast towers. Tower height shall be kept to an average of 30m.

Street/road lighting and boundary wall lighting shall be provided with LED lamp fittings mounted on poles of 9m to 11m height.

8.0 Power factor improvement

Power factor of all the light fittings shall be improved so that it is not less than 0.90. Power factor shall be improved by providing capacitor banks with discharge resistor in the light distribution or by providing capacitors with individual fittings.

© 2022 MECON Limited All rights reserved

9.0 Lighting Transformer

Sl.No.	Parameter	Description
1.0	Type	Dry Type, Class F insulation, Protection - IP42.
2.0	Power Rating	As per design calculation
3.0	Primary Voltage	415 V
4.0	Secondary Voltage	415 V
5.0	Connection	Star – Star
6.0	Tap at primary	+/-2.5% & +/-5%

10.0 Main Lighting Distribution Board (MLDB)

A. General		
1.0	Type	- Metal clad. - Non drawout type. - Type tested design
2.0	Construction	- Modular construction . - Fully compartmentalized with metal / insulating material partition.
3.0	Enclosure class	IP52
4.0	Type of execution	Single front.
5.0	Mounting	- Floor mounting. - Free standing with ISMC 75.
6.0	Installation	Indoor.
B. Constructional Features:-		
1.0	Sheet steel	
	Thickness	- 2 mm for load bearing members. - 1.6 mm for non load bearing members.
	Material	CRCA
2.0	Cable entry	- Incomer :- Bottom cable entry. - Outgoing :- Bottom cable entry.
3.0	Design	- Separate bus alley and cable alley on opposite side of the outgoing modules. - All the components shall be accessible from front.

© 2022 MECON Limited All rights reserved

		- Each module to have covering at the bottom. - Minimum 200mm shall be left blank at bottom through the length of panel.
4.0	Interlocking & protection	- Module door interlocked with main power isolating devices. - Power circuit isolation device to have pad locking in the OFF position with door closed.
5.0	Operating height	- Minimum :- 300mm - Maximum :- 2000 mm.
6.0	Gland plate	Undrilled removable bottom gland plates (3 mm thick)
7.0	Miscellaneous	- Neosprene rubber gasket shall be provided for all the doors , removable covers & between adjacent covers . - Lifting hooks for the panel . - Doors shall have concealed hinges .
8.0	Labelling	Clear legible identification labels (anodized aluminium with white letters engraved on black background) with letter sizes of :- - 25-50 mm for MLDB panel - 5 mm for components and module name plates. - Danger board on front and rear sides in English, Hindi and local language .
9.0	Earthing	- Two separate earthing terminals shall be provided. - Bolted joints with tooth spring washers for good earth continuity. - Earth bus to run in all cable alley of the panel .
10.0	Shipping length	To be limited to 2.4 M.
11.0	Limiting dimensions	Width of MLDB Vertical :- 800 mm (min) Width of Module :- 500 mm (min) Width of Cable alley :- 300 mm (min) Depth of MLDB :- 600 mm Height of MLDB :- 2400 mm (max) Width of Bus alley :- 300 mm (min) Height of module :- 300 mm (min) Or Shall be as per type tested design approved from Govtaccridiated lab and conforming the relevant IS

© 2022 MECON Limited All rights reserved

C.	**Busbars**	
(i)	**Main horizontal & vertical busbars**	
1.0	Arrangement	Three phase & neutral. Bus Bar chamber on the top.
2.0	Material	High conductivity electrolytic aluminium alloy confirming to grade E91E as per IS-5082 –1981.
3.0	Phase Busbar Rating	- Minimum rating shall be same as incomer MCCB rating - Shall be able to carry continuously the connected load (considering all derating factors) plus a 25% margin . - Max. current density shall be - 0.8 A/sq.mm for Aluminium - 1.2 A/sq.mm for Copper .
4.0	Neutral Busbar Rating	50 % of phase busbar rating
5.0	Short circuit rating	50 KA for 1 sec.
6.0	Busbar configuration	Red-yellow-blue from front to back or top to bottom or left to right as viewed from front.
7.0	Busbar insulation	Heat shrinkable PVC - R,Y,B coloured sleeves for phases - Black for neutral.
8.0	Busbar supporting insulators	- Non-hygroscopic - Flame retarded - Track resistant - High strength - Sheetmoulded compound or equivalent polysterfibre glass moulded type .
9.0	Max. temp. rise of bus	Not to exceed 35 deg. C. above ambient of 50 deg.C.
10.0	Air clearance for bare busbar	Phase to phase :- 25.4 mm (minimum) Phase to earth :- 19.0 mm (minimum)
11.0	Joints and tap off points	- Busbar joints and tap off points shall be shrouded and bolted (with cadmium coated bolts with plain and spring washers and locknuts). - Bimetallic connectors for connection between dissimilar metals . - Antioxide grease for all bus connections .
12.0	Neutral bus isolation	Through disconnecting link .
13.0	Vertical busbar	Rear side/Front side (Type tested)

© 2022 MECON Limited All rights reserved

(ii)	**Earth bus**	
1.0	Material	GI/AL at bottom through the panel lenght.
2.0	Size	Minimum 50 x 6 mm with extension at both ends .
(iii)	**Control bus**	
1.0	Material	Copper.
2.0	Size	Minimum 25 x 3 mm or equivalent.
3.0	Emergency operation	Availability of control supply in case of failure of normal power shall also be provided so that Bus-coupler & Incomer operation for emergency can be done.
D.	**Insulation level**	
1.0	Rated insulation voltage	1100 V
2.0	Impulse withstand voltage	4 KV as per IS-13947 (Part I) 1993.
3.0	One minute power frequency withstand voltage	2.5 KV for power circuit & 500 V for control circuit.
E.	**Feeder arrangement**	
	Incomers	
1.0	Isolating Equipment	3 pole microprocessor based MCCB (for rating upto 630 A) with LSIG protection.
2.0	Quantity	Two incomers & One Bus coupler
3.0	Autochangeover	- Through Power contactor logic with suitable timer and auto manual selector switch. - Power Contactors of AC3 rating same as incoming MCCB.
4.0	Indication Lamps	LED type indicating lamps for:- - MCCB ON/OFF/TRIP. - Power ON R / Y / B.
5.0	Meters and selector switches	- 96 sq.mm size voltmeter with 7 position selector switches - 96 sq.mm size ammeter with 4 position selector switches
6.0	Current transformer	3 numbers for metering .
	Outgoing feeder arrangements	
1.0	Circuit breaker	Three pole microprocessor based MCCB with LSIG release.
2.0	Indications	ON/OFF/TRIP indication lamp.

© 2022 MECON Limited All rights reserved

F.	**Panel wiring**	
1.0	Power / current transformer circuit	1.1Kv grade single core, black colour PVC insulated , stranded copper conductor of minimum size 2.5 sq.mm.
2.0	Ferrules	- Numbered plastic/ceramic ferrules. - Self locking type.
3.0	Marking	- Wiring shall be properly marked as per relevant IS.
4.0	Terminals	- Power & control terminals shall be segregated by insulating material like hylam / bakelite sheet. - Power terminals shall be stud type. - Control terminals shall be clip on type suitable for connecting two cores of 2.5 sq.mm wires. - Minimum 20 % spare terminals shall be provided. - The minimum rating of control terminal shall be 10 Amps.
5.0	Cable glands	Double compression cable glands for receiving external power and control cables.

11.0 SUB LIGHTING DISTRIBUTION BOARD (SLDB)

A.	**General:-**	
1.0	Type	- Metal clad. - Shall be suitable for 415/240V, 3 phase and neutral.
2.0	Construction	- Totally enclosed.Dust& vermin proof. - Welded back and sides.
3.0	Enclosure class	IP54.IP 55 (with canopy) for outdoor installation.
4.0	Type of execution	Single front.
5.0	Mounting	Wall mounting.
6.0	Installation	Indoor/ Outdoor (with canopy).
B.	**Constructional Features:-**	
1.0	Sheet steel CRCA	
	Thickness	2 mm.
2.0	Cable entry	- Incomer :- Bottom cable entry. - Outgoing :- Top / Bottom cable entry.
3.0	Design	- One Incomer and outgoings.

© 2022 MECON Limited All rights reserved

		- Separate compartment for incomer & separate compartment for out goings. - All the components shall be accessible from front. - Access to the operating handle of the incoming isolating switch shall be from the front of the cubicle without opening the front door. - Operating knobs of outgoing MCBs shall be accessible only after opening the front door of the cubicle. - Protective insulated cover plate (3 mm thick bakelite sheet) shall be provided inside the cubicle to shroud all the live parts.
4.0	Gland plate	Undrilled detachable gland plates (3 mm thick) shall be provided at the top and bottom with suitable gaskets for cable entry.
5.0	Miscellaneous	- Neosprene rubber gasket shall be provided for all the doors , removable covers & between adjacent covers . - Suitable locking devices. - Doors shall have concealed hinges .
6.0	Labelling	Clear legible identification labels (anodized aluminium with white letters engraved on black background) with letter sizes of :- - 5 mm for components and module name plates. - Danger board on front and rear sides in English, Hindi and local language .
7.0	Earthing	Two separate earthing terminals shall be provided.
8.0	Limiting dimensions	- Width of SLDB :- 900 mm - Depth of SLDB :- 300 mm - Height of SLDB :- 800 mm (min)
C.	**Busbars**	
1.0	Arrangement	Three phase & neutral.
2.0	Material	High conductivity electrolytic aluminium alloy confirming to grade E91E as per IS-5082 –1981.
3.0	Phase Busbar Rating	- Shall be able to carry continuously the connected load (considering all derating factors) plus a 25% margin. - Max. current density shall be; - 1.0 A/sq.mm for Aluminium. - 1.5 A/sq.mm for Copper.

© 2022 MECON Limited All rights reserved

4.0	Neutral Busbar Rating	50 % of phase busbar rating.
5.0	Short circuit rating	25kA for 1 sec(or higher as per system requirement).
6.0	Busbar configuration	Red-yellow-blue, black for neutral.
7.0	Busbar insulation	Heat shrinkable PVC; - R,Y,B coloured sleeves for phases. - Black for neutral.
8.0	Busbar supporting insulators	- Non-hygroscopic - Flame retarded - Track resistant - High strength - Sheet moulded compound or equivalent polysterfibre glass moulded type.
9.0	Air clearance for bare Busbar	Phase to phase :- 25.4 mm (minimum) Phase to earth :- 19.0 mm (minimum)
D. Feeder arrangement		
Incomers		
1.0	Isolating Equipment	3 pole ELCB/RCCB with IsolatorAC23 duty ELCB/RCCB shall be of AC 23 duty category conforming to IS: 13947-1993 having fully shrouded contacts.
2.0	Quantity	One
3.0	Indication Lamps	LED type indicating lamps for:- - Power ON R / Y / B .
Outgoing feeder arrangements		
1.0	Circuit breaker	DP MCB.
E. Panel wiring		
1.0	Power / current transformer circuit	1.1kV grade single core, black colour PVC insulated, stranded copper conductor of minimum size 2.5 sq.mm.
2.0	Ferrules	- Numbered plastic/ceramic ferrules. - Self locking type.
3.0	Marking	Wiring shall be properly marked as per relevant IS.
4.0	Terminals	- Power & control terminals shall be segregated by insulating material like hylam / bakelite sheet. - Terminals shall be ELMEX type suitable for connecting two cores of 2.5 sq.mm wires. - Minimum 20 % spare terminals shall be provided.

© 2022 MECON Limited All rights reserved

		- The minimum rating of control terminal shall be 10 Amps.
5.0	Cable glands	Double compression cable glands for receiving cables .
6.0	Labelling	Clear legible identification labels (anodized aluminium with white letters engraved on black background) with letter sizes of:- - 25-50 mm for panel. - 5 mm for components and module name plates. - Danger board on front and rear sides in English, Hindi and local language.
9.0	Earthing	- Two separate earthing terminals will be provided. - Bolted joints with tooth spring washers for good earth continuity. - Earth bus to run at bottom.
10.0	Shipping length	Individual Panel
11.0	Limiting dimensions	- Width of Panel :- 1100 mm - Depth of Panel :- 450 mm - Height :- 1200mm

12.0 OUT DOOR FEEDER PILLAR

For Mining areas & Beneficiation/any Process Plant at Mining area, each incomer of Out Door Feeder Pillar shall be provided with 415V/240V transformers with secondary midpoint earthed having 30% spare capacity (minimum 25kVA rating). The transformer shall be mounted inside the panel (feeder pillar), dry type, class F insulation.

A. General		
1.0	Type	- Metal clad. - Non drawout type.
2.0	Construction	- Fully compartmentalized. - Separate compartment for incoming MCCB, Bus Bar, Meters etc. - Separate common compartment for out going TPN MCBs Power isolating devices.
3.0	Enclosure class & Doors	IP55 with Double Door arrangement and with Top Canopy.
4.0	Maintenance/Type of execution	From Front only.
5.0	Mounting	- Floor mounting. - Free standing with ISMC 75.

© 2022 MECON Limited All rights reserved

6.0	Installation	Out Door - Mounting on Platforms made up of Civil/RCC approx. 400mm above Road levelwith steel wire fencing all around feeder pillar
B. Constructional Features :-		
1.0	Sheet steel	
	Thickness	- 2 mm for load bearing members. - 1.6 mm for non load bearing members.
	Material	CRCA
2.0	Cable entry	- Incomer : - Bottom cable entry. - Outgoing: - Bottom cable entry.
3.0	Design	- Incoming Compartment to house Bus Bars on Top part with shrouding. - Incoming MCCB, CT with ammeter, voltmeter with selector switches shall be mounted inside incoming compartment, where asout going MCBs shall be mounted in separate out going compartment. - All the components shall be accessible from front.
4.0	Interlocking & protection	- Incoming MCCB handle shall be interlocked with 2nd Door with defeat facility and Pad locking facility
5.0	Operating height	- Minimum :- 300mm from bottom of Panel - Maximum :- 1200 mm.
6.0	Gland plate	Undrilled removable bottom gland plates(3 mm thick).
7.0	Miscellaneous	- Neosprene rubber gasket shall be provided for all the doors, removable covers & between adjacent covers. - Lifting hooks for the panel. - Doors shall have concealed hinges.
8.0	Labelling	Clear legible identification labels (anodized aluminium with white letters engraved on black background) with letter sizes of:- - 25-50 mm for panel. - 5 mm for components and module name plates. - Danger board on front and rear sides in English, Hindi and local language.
9.0	Earthing	- Two separate earthing terminals will be provided. - Bolted joints with tooth spring washers for good earth continuity. - Earth bus to run at bottom.

© 2022 MECON Limited All rights reserved

10.0	Shipping length	Individual Panel.
11.0	Limiting dimensions	- Width of Panel :- 1100 mm - Depth of Panel :- 450 mm - Height :- 1200mm
C.	**Busbars**	
1.0	Arrangement	Three phase & neutral.
2.0	Material	High conductivity electrolytic aluminium alloy confirming to grade E91E as per IS-5082 –1981.
3.0	Phase Busbar Rating	Current density shall be; - 1.0 A/sq.mm for Aluminium - 1.5 A/sq.mm for Copper . - Minimum Size – 30mmx10mm
4.0	Neutral Busbar Rating	50 % of phase busbar rating.
5.0	Short circuit rating	25 KA for 1 sec.
6.0	Busbar configuration	Red-yellow-blue from front to back or top to bottom or left to right as viewed from front.
7.0	Busbar insulation	Heat shrinkable PVC; - R,Y,B coloured sleeves for phases. - Black for neutral. - Complete Shrouding to be provided.
8.0	Busbar supporting insulators	- Non-hygroscopic. - Flame retarded. - Track resistant. - High strength. - Sheet moulded compound or equivalent polysterfibre glass moulded type.
9.0	Max. temp. rise of bus (if applicable)	Not to exceed 35 deg. C. above ambient of 50 deg.C.
10.0	Air clearance for bare Busbar	Phase to phase :- 25.4 mm (minimum) Phase to earth :- 19.0 mm (minimum)
11.0	Joints and tap off points	- Busbar joints and tap off points shall be shrouded and bolted (with cadmium coated bolts with plain and spring washers and locknuts). - Bimetallic connectors for connection between dissimilar metals. - Antioxide grease for all bus connections.

© 2022 MECON Limited All rights reserved

12.0	Neutral bus isolation	Through disconnecting link .
13.0	Vertical Busbar	NA
(ii) Earth bus		
1.0	Material	GI.
2.0	Size	Minimum 50 x 6 mm with extension at both ends.
(iii) Control bus		
1.0	Material	NA
2.0	Size	NA
3.0	Emergency operation	NA
D. Insulation level		
1.0	Rated insulation voltage	1100V.
2.0	Impulse withstand voltage	4 KV as per IS-13947 (Part I) 1993.
3.0	One minute power frequency withstand voltage	2.5 KV for power circuit & 500 V for control circuit.
E. Pollution Degree		
1.0	Pollution Degree	Pollution Degree 3. as per IS-13947 (Part-1) : 1993;unless otherwise stated.
F. Feeder arrangement		
Incomers		
1.0	Isolating Equipment	TPN MCCB (100A) microprocessor based with LSIG release (minimum 25KA for 1 sec). In case E/F protection is not available with MCCB of rating, same shall be provided using CBCT, E/F relay.
2.0	Quantity	One incomer
3.0	Automatic operation	Incoming shall be provided with 100A (AC-3) rating Power contactor-4 pole. Selector switch for Auto/manual selection to be provided. Under Auto mode, Power contactor shall be made on with the help of Timer. Under manual mode, Power contactor shall be made on using Start/stop PB mounted on 2nd Door.
4.0	Indication Lamps	LED type indicating lamps for:- - Power ON R / Y / B.
5.0	Meters and selector switches	- Ammeter & Voltmeter. - 96 sq.mm size with selector switches.
6.0	Current transformer	3 numbers for metering.
Outgoing feeder arrangements		

© 2022 MECON Limited All rights reserved

1.0	Circuit breaker	Three pole MCB .- 32A with removable neutral link-15Nos minimum. DP MCB- 32A with removable neutral link-15Nos minimum (For Mining areas & Beneficiation/any Process Plant at Mining area).
2.0	Indications	NA
3.0	Protection	All the equipment inside the boards shall be covered in front with a 3 mm thick bakelite sheet. Only the operating knobs of the equipment shall be projected outside the bakelite sheet and 2nd Door for safe operation.
G. Panel wiring		
1.0	Power / current transformer circuit	1.1kV grade single core, black colour PVC insulated, stranded copper conductor of minimum size 2.5 sq.mm.
2.0	Ferrules	- Numbered plastic/ceramic ferrules. - Self locking type.
3.0	Marking	- Wiring will be properly marked as per relevant IS.
4.0	Terminals	- Power & control terminals shall be segregated by insulating material like hylam / bakelite sheet. - Power terminals will be stud type.
5.0	Cable glands	Double compression cable glands for receiving external power and control cables.

13.0 Control Room Switchboard

1.0	Location	Control room for controlling the lighting fixtures
2.0	Type	Flush mounted type
3.0	Construction	Fabricated from 14 SWG MS sheet with 6mm thick bakelite cover Shall have conduct knockouts on the sides.
4.0	Switch mechanism	Modular switches shall be provided
5.0	Power source	The switchboards shall be fed from SLDB of respective area.

14.0 Transformer for 24V AC Sockets

1.0	Type	Dry type Step-down transformer Air-cooled
2.0	Rating	Minimum 2500VA

© 2022 MECON Limited All rights reserved

3.0	Primary / secondary voltage	240V /26.5 V AC , single-phase
4.0	Construction	The transformer shall be enclosed in industrial wall mounting stainless steel (2 mm thick) box having separate chambers for the transformer, incoming and outgoing MCB's.
5.0	Cable entry	Suitable knock-outs shall be provided at the top and bottom for cable entry through GI pipes.
6.0	No. of winding	Two winding
7.0	Protection	SPN MCB's on primary and secondary side incorporating overload and short circuit releases.
8.0	Utility	Power supply to 24V repair network
9.0	Location	On structural platforms

15.0 24 V AC SWITCH SOCKET OUTLET (For use at Shop Floors)

1.0	Type	2 pole, 3 pin with third pin earthed industrial type receptacles.
2.0	Rating	24V AC, 5A.
3.0	Construction	Metal clad gasketted construction,weatherproof.
4.0	Cable entry	Suitable for cable entry through 20mm dia. conduit.
5.0	Mounting	Wall / column mounting.

16.0 240V SWITCH SOCKET OUTLET (For use at Shop Floors/Technological areas, Panel rooms, cable floors etc.)

1.0	Type	1 pole, 5 pin with third pin earthed industrial type receptacles . non-reversible, metal-clad, dust proof, industrial type suitable for horizontal insertion.
2.0	Rating	240 V AC , 5+15A,
3.0	Construction	Metal clad gasketted construction, weatherproof All socket outlets shall be supplied with heavy-duty type plug and cap with chain.
4.0	Isolation Switch	rotary type switch mounted flush in the socket outlet box. The isolating switches shall be manually operated industrial type of category AC 22.
5.0	Protection	Operating handle of the rotary switch shall be fixed in

© 2022 MECON Limited All rights reserved

		such a manner that it shall not be possible either to insert or withdraw the plug without switching off the supply.
6.0	Cable entry	Suitable for cable entry through 20mm dia. conduit.
7.0	Mounting	Wall / column mounting.
8.0	Inscription	Inscription plate shall be provided indicating the voltage and current rating of the switch socket outlet.
9.0	Miscellaneous	In hazardous area, flame proof switch socket outlet shall be provided.

17.0 240 V SINGLE/ DOUBLE POLE SWITCHES (For use at Shop Floors)

1.0	Application	The switches are intended for controlling lighting circuits.
2.0	Type	Weather and dustproof and industrial type.
3.0	Design	The rotary or toggle switches provided shall be of sturdy design.
4.0	Standard	As per IS : 6875 (Part-3) – 1980.
5.0	Housing	The unit shall be housed in cast iron or cast aluminium box having gasketted, screwed front cover plate, fixing lugs and suitable provision for terminating conduit/cable at the top, bottom or sides as specified.
6.0	Mounting	DIN Channel mounting. Single phase MCBs mounted adjacent to each other and connected to different phases shall be provided with adequate insulated phase barriers.
7.0	Terminal suitability	Terminals suitable for aluminium conductor cables.

18.0. Lighting Fixtures and Accessories

01 All the luminaires shall be designed, manufactured and tested in accordance with the Indian Standards as far as they are applicable.

02 All the luminaires shall be industrial type with LEDwithminimum burning time of 50,000 hours with no toxic content with a colour temperature (CCT)>=4000K & CRI above 80.Power factor shall be more than 0.9 and driver efficiency more than 86%.Junction Temperature shall be kept as low as possible so as to increase performance and life time of LED and ensure that the luminaires are as heat efficient as possible. LED Light fittings shall be suitable for operation at an ambient temperature of 50 Deg. C. Heat sink temperature rise above ambient shall be limited as per relevant available IS/IEC. For all out door fittings, surge arrestors shall be provided.

All the lighting fixtures shall be complete with all parts along with LED lamps/tubes, drivers and accessories for installation and efficient performance whether specifically mentioned in the specification or not.

© 2022 MECON Limited All rights reserved

LED fittings shall be selected so as to provide correct colour appearance and rendering to enable workers to see & judge quickly and accurately, details of their work such as colour, brightness, shape form etc.

03 Individual light fittings shall be provided with suitable gland arrangements for 3x2.5 sq.mm armoured copper cable entry unless otherwise specified. Terminals of all fittings shall be suitable for taking 3x2.5 sq.mm, copper conductor PVC insulated and PVC sheathed cable.

04 All fittings shall be supplied with all interconnections made and fully wired upto the terminal block.

05 All live parts shall be provided with suitable sleeves to prevent accidental contacts. The earthing terminal in the fitting shall effectively earth the body of the entire luminaire.

06 Dust and vapour tight fittings shall have the enclosures suitably designed to withstand the heating effect.

07 The fixing arrangement of various components shall be in such a way that the maintenance and replacement jobs can be easily carried out.

08 All flameproof equipment shall be provided with flameproof plugs.

09 Flame proof fittings and control gearboxes shall be provided as per relevant IS in hazardous area. Flame proof light fittings shall have approvals from statutory CMRI-Dhanbad, CCoE-Nagpur, DGMS-Dhanbad& DGFASLI-Mumbai.

19.1. ILLUMINATION FITTINGS

1.0 OUTDOOR LIGHTING FITTINGS.

All road lighting fittings shall be mounted on steel tubular poles with single/ double or triple outreach brackets having LED lamps.

For lighting of open areas, self-supporting steel towers shall be provided with flood light fittings with LED Lamps.

2.0 LED FITTINGS

2.01 DECORATIVE LED LIGHT FITTING

Decorative type light fitting suitable for energy efficient tubular LED lamps with diffuser and CRCA body, IP20 for recessed mountingaccommodating all electrical accessories pre wired upto a terminal block. It shall have optimum glare control and shall be aesthetically appealing with distinguished looks.

2.02 INDUSTRIAL TYPE LED LIGHT FITTING

Energy efficient industrial type LED tube fitting, the fitting shall have channel and reflector with white cover plate, CRCA body/housing with powder coated finish & with diffuser for glare free light distribution. The fitting shall be complete with all electrical accessories and pre wired upto a terminal block.

For battery rooms, Acid plants, Chemical plants, luminaries shall be polycarbonate housing, MS gear tray dully pre-wired with accessories and transparent cover of polycarbonate similar to IPFC112LT16/20 or equivalent complete with 2 numbers of LED tubes

All types of LED fittings shall be suitable for mounting on wall/ceiling/conduit suspension.

© 2022 MECON Limited All rights reserved

2.02.1 WELL GLASS FITTINGS

Industrial type, Integral well glass luminaire with IP 65 protection with die cast housingsuitable for use with LED lamp. The luminaire shall be complete with controlgear, driver & surge protector, heat resistant cover, wire guard preferred in case available adjustable mounting bracket, cable loop-in loop-out arrangement etc.

2.02.2 FLOOD LIGHT FITTING

Weather proof Flood light luminaire with LED lamp, IP 65, integral type with aluminium die cast housing.The luminaire shall be complete with controlgear, driver & surge protector, heat resistant cover, prewired up to terminal block.

2.02.3 HIGH BAY LIGHT FITTING

Industrial heavy duty light fittings shall be suitable for minimun 24000 lumens LED Lamp, IP 65, integral types with aluminium die cast housing. The luminaire shall be complete with control gear, driver & surge protector, heat resistant cover, prewired up to terminal block

2.02.4 STREET LIGHT FITTING

LED based, energy efficient type and Street light fittings, suitable for outdoor duty in weatherproof enclosure class with IP65 protection, integral starting/control gear complete with controls/starter pre-wired to a terminal block. LED fixture housing shall be made up of high grade pressure die cast aluminium with powder coating to provide excellent resistant to corrosion.. The fittings to be provided with heat resistant & toughened glass cover. The fittings shall be suitable for direct mounting on poles having extended arm. LED Light fittings shall be suitable for operation for out door installation. Heat sink temperature rise above ambient shall be limited as per relevant IS/IEC as available.

LED shall be provided with secondary lens optics to achieve effective light intensisty distribution.

2.02.5 FLAME PROOF FITTINGS

Flame proof type (FLP) LED fittings shall be well glass type luminaries suitable for use with IP67, power factor improvement capacitor, terminal block enabling loop-in-loop out connection. Both fittings & control gear shall be of cast Aluminium alloy LM6 or cast iron stove enamel, Grey hammertone finish outside and white inside.

The control gear box and enclosure for fittings shall have certification from CIMFR, Dhanbad/ PESO and shall be suitable for gas groups IIA & IIB as per IS/IEC: 60079. The fittings shall be designed as per IS 2206 (Part-I) -1987. The material for cable gland shall be brass/stainless steel/aluminium alloy LM6 and shall be double compression type suitable for indoor/outdoor use. These are must for every flameproof fittings and accessories.

3.0 STREET LIGHTING POLES

Lighting poles shall be fabricated from GI of specified section with joints swaged together when hot and bevelled on outside edges. A weatherproof sheet steel junction box shall be provided at the bottom of the pole and contain DP MCB, bolted type terminals, grounding stud etc. The bolted type terminals shall be suitable for receiving 4 x 16 mm2 AYFY cables with loop-in-loop out arrangement GI conduits shall be embedded in the muff for incoming and outgoing cables.

© 2022 MECON Limited All rights reserved

The street light poles of 9 M height shall be conforming to 410-SP-29.

The street light poles of 11 M height shall be conforming to 410-SP-51.

All erection consumables like bricks, sand, cement stone chips etc. for foundation of poles shall be supplied & erected.

OR

GI OCTAGONAL STREET LIGHT POLES

The Octagonal Poles will be designed to withstand the maximum wind speed as per IS 875. The top area i.e. area of pole itself and weight of brackets & fixtures will have to be considered to calculate maximum deflection of the poles and will meet the requirement of BS 5649 Part VI 1982.

The Pole shaft will have octagonal cross section and will be continuously tapered with single longitudinal welding, There will not be any circumferential welding. The welding of Poles shaft will be done by submerged Arc Welding process.

All Octagonal pole shafts will be provided with rigid flange plate of suitable thickness with provision for fixing minimum 4 foundation bolts. This base plate will be fillet welded to the pole shaft. Foundation bolts will also be supplied.

The Octagonal Poles will have door of approximate 500mm length at elevation of 500mm from base plate. The door will be dust & weather proof & water tight. The door will be flush with exterior surface and will have suitable locking arrangement. There will also be suitable arrangement for the purpose of earthing. The pole will be adequately strengthened at the location of door to compensate the loss in section. Inside door, suitable Power Terminal Box for looping incoming 415V power cables 4CX25Sq. MM & DP MCB (C-Curve) with 3x2.5sq.mm wires will be provided for power supply to light fittings. Street light pole with two arms will have two MCBs inside the JB.

Material of Octagonal Poles will be HT Steel of minimum 3mm thick. Base plate will be Fe 410 conforming to IS 226/IS2062. Base plate will be supplied with each pole.

Foundation Bolts EN.8 grade.

Octagonal poles will be single section upto 11 mtr.

The Poles will be Hot dip galvanized as per IS 2629/IS2633/IS4759 standards with average coating thickness of 70microns. The galvanizing will be done in single dipping.

Fixing of Octagonal Poles will be done on pre-cast foundation with sets of minimum 4 foundation bolts.

Galvanised mounting bracket will be supplied along with the poles for installation of luminaries.

The arms will be integral with top cover, bolted type which can be removed for maintenance of fitting.

All erection consumables like bricks, sand, cement stone chips etc. for foundation of poles will be supplied & erected.

© 2022 MECON Limited All rights reserved

The foundation of the Poles will be made of RCC. The design drawing for foundations will be submitted for approval/checking during DE.

Bracket length will be minimum 1500mm.

4.0 High Mast Lighting Tower

4.01 Mast Proper

The mast shall be 20/30 meter's high and designed in such a manner that it is capable of withstanding external forces exerted by wind pressure as per IS: 875 (Part 3)-1992 along with load of the lantern carriage assembly.

4.02 Mast Construction

The mast shall be fabricated from special steel plates conforming to BS 4360 cut and folded to form number of polygonal sections, giving a continuous tapered profile for stability and aesthetics, Silicon content in steel should not exceed 03% for good quality galvanisation. Bottom section shall be provided with plate welded to it for anchoring the mast to a reinforced concrete foundation block. To increase the strength, gussets shall be provided.

The bottom section shall be accommodate winch, electric drive etc. and for the safety of the same a vandal resistant and weather proof door shall be provided with locking arrangement.

The fabricated and welded mast sections as detailed above shall be hot dip galvanised with a minimum thickness of coating 90 microns conforming to IS 4759-1996, IS: 2629-1990 & IS: 2633-1992, both internally and externally.

After the delivery of the mast at site, these shall be jointed by slip stressed fit method with necessary stressing equipment. No site welding or bolted joints shall be accepted. Earthing terminal shall be provided on the mast base and feeder pillar-box as per relevant ISS.

The mast shall be provided with suitable aviation obstruction lamp.

4.03 Head Frame

The head frame designed to be a capping unit of the mast shall be of welded steel construction, galvanized internally and externally after assembly.

The head frame assembly shall accommodate specially designed LM 6 die-cast pulleys to accommodate the wire ropes and cable. Pulley construction shall ensure that wire rope does not jump out of the grooves.

The suspension arrangement for lantern carriage shall be with three ropes of stainless steel running on three on three pulleys for superior stability. There shall be a separate pulley for running the electric supply cable.

The pulleys shall run on stainless steel shaft/spindles and shall be self lubricating type.

The whole head frame assembly shall be covered and protected by steel canopy, hot dip galvanized internally and externally and secured to frame by stainless steel hardware.

4.04 Lantern Carriage

It shall be of mild steel construction and hot dip galvanized internally and externally. The lantern carriage shall be so designed and fabricated to hold designed number of flood light fittings and their control gearboxes, radically symmetrical. All junction boxes, Controlgear, fittings etc. mounted on the lantern carriage shall be on non-corrodable material with class of protection IP 55.

© 2022 MECON Limited All rights reserved

At the top docking position, combined guides and stops shall ensure concentricity between the lantern carriage and the masthead. The stops shall also help to ensure proper levelling and positioning of the lantern carriage at its top position. All the lower docking position, the lantern carriage shall rest firmly at a maintainable height from the ground level with the help of stoppers for ease of maintenance.

During lowering/raising operation the design shall ensure that there is no damage caused to the mast surface and any other parts installed.

4.05 Winch Assembly

The winch shall be self sustaining and self lubricating type specially designed without the need of breaks, springs or clutches, and shall consist of two drums fabricated from steel with machined grooves and mounted inside the mast at a convenient height from the base.

The wire rope shall be wound on the drum with one end attached to the lantern carriage while the other end is clamped to the winch drum. The design shall ensure no inter winding of the fitting ropes.

At least four turns of rope shall remain on the drums when the lantern carriage is fully lowered.

4.06 Support Ropes

The support ropes shall be of stainless steel and shall be capable of safely handling the lantern carriage load.

4.07 Supply cables.

Power supply cables shall be class B insulated with required number of cores provided with multi-pin heavy duty locking type male/female connectors at the end. Pulley assembly shall accommodate extra cable for emergency supply.

Test load shall be of 5-meter length 5-core 2.5-mm2 copper conductor cable with multi-pin heavy duty locking type male/female connectors at the ends. Under no circumstances the test lead shall travel through the mast.

4.08 Foundation

The design and construction of foundation for high mast lighting tower shall be included in the scope of the contractor.

The Contractor shall submit the design drawings for approval of MECON for high mast based on soil bearing capacity and wind speed. The Contractor shall be responsible for safe & efficient erection of the mast.

4.09 Electric Drive & Fittings

The drive shall be 3 phase, 415 volt, 50 Hz, class B insulated,induction motor/geared motor with suitable torque limiter.

The motor shall be mounted on MS hot dip galvanised plate inside the mast with a possibility of adjusting its position. The drive shall be capable of taking the load of whole lantern carriage with luminaries, control gearboxes, aviation obstruction light mounted on it.

Manual handle shall be supplied along with power tool for operating the winch manually in case of power failure. Reversible type starters for motor, contactors for lighting circuit, MCB isolator switch etc. shall be provided in a weatherproof enclosure.

4.10 Light Fittings

© 2022 MECON Limited All rights reserved

The light fittings shall be of integral type flood light type with LED lamps. The quantity,wattage, mounting position/angle and optical characteristics shall be decided on the basis of the following illumination requirement.

Minimum 30 lux illumination shall be achieved at a horizontal distance of 30 meters from the bottom of the mast all around. Illumination level of 10 lux shall be sufficient at plant boundary wall, parking area, Administrative Building, etc. Minimum of 3-5 lux is required to be achieved at a horizontal distance of 125 Metre from the bottom of the mast towards all area. Minimum 20 lux shall be achieved in the areas adjoining at the perimeter of 40 meter (approx.) radius considering the mast base at the centre.

All lighting performances shall be checked holding the lux meter in horizontal plane at ground level.

© 2022 MECON Limited All rights reserved

UTKARSHA ALUMINIUM DHATU NIGAM LIMITED

GENERAL TECHNICAL SPECIFICATION FOR ELECTRICS, DRIVE & CONTROL EARTHING, LIGHTENING, PROTECTION, ERECTION & TESTING (GS 03 PART-I SECTION- C)

MECON LIMITED
RANCHI – 834 002

No. MEC/S/11/35/Q7R6/GTS/01/R0 **JUNE' 2022**

© 2022 MECON Limited All rights reserved

LIST OF CONTENTS

PART –I:SECTION – C

Clause No.	Contents	Page No.
1.0	Earthing & Lightning Protection	1
2.0	Repair Network	5
3.0	Guide Lines for Erection Of Electrical Equipment And Accessories	6
4.0	Factory Testing	15
5.0	Site tests and checks	22

© 2022 MECON Limited All rights reserved

1.0 EARTHING AND LIGHTNING PROTECTION

1.01 Earthing - General

Entire system shall be earthed in accordance with the provisions of the relevant IS code of practice IS 3043-1987/ IEC recommendations and Indian Electricity Rules.

Parts of all electrical equipment and machinery not intended to be alive shall have two separate and distinct earth connections each to conform to the stipulation of the Indian Electricity Rules and apparatus and the electrical equipment/ machinery rated 240 V and below may have single earth connections.

All shops and buildings as well as the electrical sub-stations and electrical rooms shall be provided with a ring main earthing system each. Individual ring main earthing systems shall again be interconnected as a network.The earthing system shall be provided to have overall network earthing resistance less than one ohm. Soil resistivity test through approved agency shall be carried out by the contractor at each location and the system shall be designed accordingly.

The ring earthing system around each building shall be laid at a distance of approximately 1.5 m from the building and at a depth of approximately 0.8m. The ring shall be bonded below the ground at intervals to the building steel structures, reinforcement of building columns and also to pipes, wherever they are crossing as far as possible. The earth ring shall further be connected at intervals to earthing electrodes as per the requirement to achieve a combined earth resistance of less than one ohm.

For the purpose of dimensioning the earthing lines/conductors for main earthing ring/earthing grid, the duration of the earth fault current shall be taken as 1 sec.

For different floors within a building, localized ground mats shall be formed and connected to the ground earthing ring through vertical risers. The earthing mat shall be common to both power and lighting installations. The ground mats so formed shall be covered with floor finish.

For protective earthing separate conductor shall be used for flow of earth fault current as elaborated below.

The LV side neutrals of the Power and distribution transformers shall each be connected to two separate earthing electrodes. They shall also be connected with the neutral bus of the corresponding switchboard. The armour of all cables as well as fourth core of motor feeder cable and all conduits for cables shall also be connected to the earthing mains. A continuous earth strip shall be run on both side in case of cable tunnel/ overhead structural cable gallery and on one side in case of cable ducts and trenches.

The fourth core of the main power supply feeders shall be connected to the solidly earthed neutral bar in the substation switchgear as well as at the neutral bars in MCC/distribution boards. For MCC feeders and feeders to motors, fourth core shall be connected to the earth bus on either side of the panel.

© 2022 MECON Limited All rights reserved

Earthing connection to equipment subject to vibration and shocks, shall be through flexible stranded conductors.

1.02 Earthing of electrical equipment on cranes and travelling machines:

Every electrical equipment shall have double earthing.A ring earthing system shall be provided within the crane/machine to which every electrical equipment shall be connected at least at two places.

The earth ring on the crane/machine shall be connected to the plant earthing system through the gantry rails. Two sets of earth collector brushes shall be provided on each side of crane/machine to connect its earth ring to the gantry rails.

Each end of each gantry rail shall be bonded to the plant earthing system.In addition, intermediate earthing bond shall also be provided on the rails at every 60 m in case of longer tracks.Flexible copper bonds shall be provided across any gap in the running gantry rails.

For mobile equipment with flexible cables/ trailing cable/ Reeling drum, one separate copper conductor of adequate size shall be provided for earthing.

1.03 Conductor sizes for ground connections:

For equipment ground connections, the minimum conductor sizes used should be as follows:

S.N.	System / Equipment	Minimum Conductor Sizes
1.	Main earthing rings around the building and risers	75 x 10 mm GI Flat
2.	High voltage systems, HT switch-boards,	
3.	Transformers Earthing and neutral	
4.	LT PCC	
5.	Main earthing ring for MCC room, in shop units/plant buildings	50 x 6 mm GI flat
6.	Aux. LT Switchboards and other equipment protected by circuit breakers.	
7.	LT MCC, PDB, MLDB, Bonds to crane gantries	
8.	HT motors	
9.	Motors and starters over 45 kW	
10.	Cable trays all around	

© 2022 MECON Limited All rights reserved

11.	Motors and starters above 15 kW, and upto and including 45 kW Control desks, cabinets, Welding socket outlet, Isolators, LDBs.	25 x 3 mm GI flat
12.	Motors and starters above 3.7 kW and upto and including 15 kW. Local Control Box/station	16 Sq. mm Stranded GI wire:
13.	Instruments and miscellaneous small items protected by fuses of ratings not exceeding 15A.	6 Sq.mm Stranded GI wire
14.	Motors and starters upto and including 2.2kW, Light fitting, JBs, etc	6 Sq.mm Stranded GI wire

1.03 Earthing electrodes

The earthing electrodes for treated earth pits shall be of GI pipes 50 mm dia and minimum5 mm thickness in one piece provided with connection bar, water filling device and other accessories in line with IS-3043 latest edition.

1.04 Elecronic earthing system

Separate electonic earthing system shall be provided for all electronic equipment like PLC"s, weighing panel, computer etc. Elecronic earthing shall be distinct and separate from the power and lighting equipment earthing system. Electronic earthing system shall be provided with copper plate earth electrodes and the same shall be connected to the equipment by insulated conductor.

1.05 Lightning protection

All buildings and plant structures vulnerable to lightning strokes owing to their height or exposed situation shall be protected against atmospheric flash-overs and lightning strokes in such a manner as to eliminate any danger to the personnel and equipment employed therein.

Stipulations of IS/ IEC :62305–1 to 4: 2010 shall be followed for lightning Protection system & components used for lightning protection shall be confirming to the respective parts (IS/ IEC : 62305 – Part 1 to 4).

Air termination network should cover all salient points of the structure. All metallic chimneys, ducts and the like above the roof of the structure shall be bonded to and form part of the air termination network.

Down conductors shall follow the most direct path possible between air termination and earth electrodes avoiding sharp bends. Down conductor shall have a testing point adjacent to the earth electrode. Each down conductor shall have an independent earth electrodes. All earth electrodes shall be interconnected below ground level.

Earthing electrodes and grid for lightning protection shall be **distinct separate** from the earthing system for earthing of electrical equipment over the ground.The lightning protection grid and the equipment earthing grid shall be **inter connected** below the ground level.

© 2022 MECON Limited All rights reserved

The termination of strips to the equipment shall be done by bolting and the wires shall be terminated by compression lugs. Jointing of strips shall be done by welding for proper continuity. All contact surfaces shall be thoroughly cleaned of dust and oil and after jointing, the joints shall be given bitumen paint.

1.06 Guidelines for installation of Earthing Conductor

Earthing conductors run on walls/floors/cable and equipment structures etc. shall be supported at suitable intervals and painted with black oxide paint.

All joints in all kind of Earthing conductors except at earthing electrode shall be welded and painted black with bitumen paint.

At road /rail crossings earthing strips shall be laid through conduits /concrete ducts.

© 2022 MECON Limited All rights reserved

2.0 REPAIR NETWORK

2.01 General

A repair network shall be laid to cover all the units/buildings of plant for providing power to maintenance tools, tackles and telphers.

2.02 Switch socket outlets (for Welding)

Welding switch socket outlets shall be provided at every 60m distance in conveyer galleries. The number of welding socket outlets for main technological plants/platforms/junction houses/units shall be decided based on requirement, approach etc. Generally the welding socket outlets shall be provided in such a manner so that using 30m flexible cable with welding set, total plant area can be covered.

- 415V, 100 A, 3 pole load break switch.
- 3 phase and one earth pin socket
- Switch socket interlocked so as to prevent insertion or withdrawal of plug when switch is "ON".
- Facilities for terminating two cables of minimum size 3.5 x 70 sq. mm aluminium cables.
- All the switch socket outlet shall be fed from PDB directly.
- Maximum of 3 sockets can be looped from one feeder.

2.03 **15 A + 5A, 240 V industrial switch socket outlets** shall also be provided. At least one socket outlet shall be provided in electrical panel rooms within a distance of 30mtr. In case of conveyor galleries/platforms/junction houses/shop floors, cable tunnel, cable floor/basement etc. atleast one socket outlet shall be provided covering a distance of 60mtr.

240 V switch socket outlets shall be fed power from Lighting circuits, i.e from SLDB or MCBDB. Multiple sockets can be looped from nearest LDB.

© 2022 MECON Limited All rights reserved

3.0 GUIDE-LINE FOR ERECTION OF ELECTRICAL EQUIPMENT AND ACCESSORIES

3.1 General

All the electrical equipment shall be installed with proper care and as per layout drawings. Minor modifications required at site shall be made by the contractor with approval of purchaser /Consultant for installation of the equipment. Care shall be taken for proper handling of equipment and undue vibrations shall be avoided particularly in case of sensitive (instrument mounted on panels) equipment.

The contractor shall have valid electrical contractor's license and supervisory license valid for working in the state where work is being carried out. He shall have in his employment sufficient number of electricians and supervisors holding valid licenses for HV and LV installations as applicable. It shall be the responsibility of the Contractor to get the installation cleared and relevant drawingscertified/approved by Electrical Inspectors, Factory inspectors, Insurance agencies and other statutory authorities. The Govt. fees and necessary commercial aspects shall be taken care by the Contractor.

Manufacturer's technical expert/their authorized expert shall be available at site during erection, testing and commissioning of the critical equipment e.g HT switchboard, Transformers, MV VFD, PLC/ DCS system, Battery system etc. Apart from these equipment, if the purchaser/ consultant feels the need for calling the manufacturer's technical expert for any other equipment, the same shall be done by the contractor without any cost implication to the client.

3.2 Rotating machines

The erection work of motors shall include checking of all motors before installation including thorough cleaning and checking of bearings, replacement/rectification of defective items, greasing of bearing, if required, making minor modifications in its mounting arrangement, wherever required, assembling and its mounting on the motor base plate or on mechanical equipment, as the case may be, including levelling and alignment, checking insulation resistance and improving the same, if necessary, checking of internal connections etc.

All work associated with revisioning of motor shall also be included such as uncoupling and removing of motor from mechanical equipment, disassembling, cleaning, checking of insulation resistance and improving the same, if necessary, regreasing and replacing defective items/bearings on foundation, wherever required, reassembling, placing, levelling, aligning and fixing of coupling of the revisioned motor with mechanical equipment.

The contractor shall check different parts and assemble the motor at site in correct sequence wherever the motors are delivered in a dismantled state i.e. base frame, bearing pedestals, armature, field frame etc. in separate packages.

Erection, alignment and securing shall be done under expert technical supervision. Optical equipment/instruments shall be used for alignment.

The height of the shaft of the motors shall correspond to the machine to be driven, if discrepancies are encountered these shall be compensated by inserting machined metal sim plates under the supports of the motor.

© 2022 MECON Limited All rights reserved

The motors mounted on the movable base frames/base plates shall be connected via intermediate terminal boxes with flexible cables.

After the complete installation of the motors, all bolts and bolted joints of the mechanical and electrical equipment shall be checked to ensure that they are done up tightly by torque wrench. A further check shall be made to ensure that the armature can be easily rotated.

The insulation resistances of the coils and connecting leads within the machine shall be checked against earth by a suitable megger. Insulation resistance if found less, the machine shall be dried to achieve the desired value.
Space heaters of main drive motor required to be installed in motor foundation pits shall be suitably and firmly mounted.

For handling the machine with the crane, the slings, lifting cables etc. shall not be secured around the shaft. However, the armature of disassembled machines may be lifted or supported by the shaft.

The system components delivered in separate packages like tank, gear pumps, filters, pressure switches, thermometer, flow regulators, centrifuge etc. shall be assembled at site and installed as per supplier's drawings. The supply and return pipelines along with their supporting structures from the lubrication system to the motor bearing shall be laid/erected by the contractor as per the relevant pipeline routing drawings. Meters and gauges shall be fixed and wired.

3.3 Sheet metal enclosed panels, open control panels, control desks and boxes

The base frames of all panels, desks, posts etc., shall be welded to structures or to the civil inserts provided on the floor/walls. Fabrication of supports/frames, wherever required, shall be done by the contractor.

The shipping section shall be placed in position before removing the protective covering to eliminate scratch/damage during movement. The shipping section shall be moved by using rollers under the shipping skids wherever lifting cranes are not available. The contractor shall do the assembly at site as per manufacturer's general arrangement drawings and installation instruction. While assembling a complete board comprising several unit type cubicles, the board as a whole shall be aligned. The panels shall be properly leveled prior to grouting the holding down bolts or welding the panels to the inserts. All interconnection of busbars and wiring between the panels shall be done as per manufacturer's instructions and drawings. Welding work on the panels shall only be carried out after consultation with the purchaser/ consultant. Damage to the paint due to welding/ transport shall be rectified by the contractor.

After mechanical installation of the board is completed, loose instruments shall be installed, wherever required, and wires shall be connected to the instrument. The wiring of intermediate terminal strips between two panels, wherever disconnected for transport, shall also be connected.

Each post shall be mounted at the place of installation in such a way that the operator has both the plant and the post before him.

The installation of control posts/boxes on mechanical equipment must be approved by the purchaser/ consultant.

© 2022 MECON Limited All rights reserved

In cases where the control posts/boxes are separately mounted near the equipment, the contractor shall fabricate and install a structural support for the same before mounting the control posts/ Control box etc.

3.4 Static Converters& Inverters

The installation shall be carried out as per manufacturers' instructions &approved equipment layout drawings.

The preservative grease from the metallic parts shall be removed by petrol and with clean markin cloth. Grease from copper parts shall be removed with ethanol and wiped with clean dry markin cloth.

The base frame of panels shall be welded to the civil inserts.

The panels supplied in separate shipping units shall be assembled at site as per manufacturer's drawings/instructions. The unit installation shall be started with the main converter. All the cabinets shall be aligned in a perfectly straight row and each of them exactly leveled. All inter-connections shall be done as per manufacturer's drawings/instructions.

3.5 Transformers and reactors

The transformer and its accessories and mountings like radiators, conservator, thermometers, silicagel breathers, marshalling box, rollers etc., delivered at site in separate packages, shall be assembled at site after cleaning by the contractor in proper sequence as per manufacturer's drawings& instructions.

Jacks shall never be placed under valves or cooling tubes.

After proper alignment of the transformer, suitable stopper shall be provided both in front as well as rear of transformer to keep the transformer stationary in its position. For the front wheels such stoppers shall be screwed on the rails.

The oil conservator and the pipes shall be erected as shown in the manufacturer's drawings. All radiator tubes shall be cleaned before installation.

Before the transformer is filled/topped with oil, oil samples shall be checked by the contractor from each container. The oil shall possess the dielectric strength as per relevant IS/IEC. Oil shall be filled upto the mark shown.

The contractor shall also test the oil from each transformer to determine its suitability for use. If required, the contractor shall carry out drying and filtering operations as per IS code of practice or manufacturer's recommendations to ensure that moisture is removed and the oil is free from impurities. This may be carried out by using oil filtering equipment to be provided by the contractor having vacuum as well as heating arrangement. Only after the dielectric strength of oil and other parameters are checked and approved, the external connections shall be made to the transformers.

The dial thermometers shall be screwed to the thermometer pockets after removal of the blind plugs.

Any modifications to HT and LT terminal box to accommodate the number of cables to be terminated shall be carried out by the contractor.

Naked light and flame shall never be used near the transformer.

3.6 Battery installation

© 2022 MECON Limited All rights reserved

All batteries shall be installed at appropriate location as per the approved drawing. Battery for UPS (SMF type) shall be panel mounted and located by the side of UPS.

Rooms having battery installation (Except VRLA or SMF type) shall have acid resistant floors and walls shall have acid resistant tiles upto 1.5m height. The battery room shall have a water tap and adequate ventilation facilities for acid/ alkali fume extraction as applicable.

Battery shall be installed such that all around approach is available for attending the terminals of the batteries. The clearances shall be as per the recommendations of the manufacturer.

All the terminals of the batteries shall be cleaned and applied with No-Ox grease or any other grease recommended by the manufacturer before and after interconnecting link installations

3.7 Busbar installation in sheet metal enclosed panels/ Bus trunking system

Busbar installation shall be commenced from the middle section and the buses shall be fastened without tightening the bolts. The buses shall lie freely on the insulators without warping and if necessary, suitable packing shall be provided at the insulators.

Final tightening of the bolts shall be done after the complete laying of buses. Approved means shall be used for tightening of the bolts with recommended tightening pressure as per the manufacturer recommendations.

Bimetallic strips/ washers shall be used wherever aluminiumbusbars or aluminium cables are terminated on copper busbars.

3.8 Crane Trolley Lines

While sectionalising, one middle safety section shall be arranged slightly in excess of the crane braking distance so that it can act as a buffer and prevent the danger of crane collector bridging the isolator gap and leading to accidents on other section under repair or maintenance.

Boarding or access platform shall be arranged within the limits of each repair section for approach to the crane.

In the middle of the run between two expansion joints and at sectionalising gaps, the rails shall be rigidly fastened/supported.

3.9 Resistance boxes

The resistance boxes shall be installed on frames to be welded to civil inserts already provided.

3.10 Cables Installations

Interplant cabling shall be done in Overhead cable galleryor Cable tunnel or Concrete cable trench as specified in TS.

Cables of small in numbers and cables for drives/field switches inside shop units shall be laid along the structures and columns of the shop / buildings. Cables may run partly in walkable cable tunnels or underground trenches and/or surface ducts in the shops and partly along the structures and columns of the buildings considering site conditions.

Where the number of cables to be laid calls for walkable tunnels and cable shafts, same shall be provided. Underground walkable cable tunnels shall have hydro sealing to prevent water seepage.

© 2022 MECON Limited All rights reserved

3.10.1 Cable Installation in excavated trench

Laying of cables directly in underground or in excavated trenches shall be avoided. However, it may be allowed in special case with permission from site in charge. In such case, cable shall be laid in one layer only, more than one layer is not permissible.

Cables in excavatedcabletrenches shall be laid on 8 cm of riddled sand and covered with 8 cm of riddled sand. RCC slabs shall be provided over the upper layer of riddled sand for protection against accidental damage during excavation.. The maximum trench depth shall normally be 1.5 m and thickness of ~~top~~RCC cover of 75 mm.

For crossing the road / rail track, surface drains and water, oil, gas or other pipe lines, cables shall be laid in concrete cable ducts, heavy duty GI pipes/RCC Hume pipes encased in concrete blocks. 25% spare conduits / pipes / duct openings shall be provided. The top of pipe blocks shall be minimum 1500mm from rail sleeper/road or as per approved drawing.

Installation of cables directly buried in ground shall generally conform to the requirements given in IS: 1255 –1983.

Entry of cables from underground to the buildings or trenches shall be through metallic conduit upto a height of 2 mtrs. After laying of cables, the conduit shall be sealed with bitumen or epoxy compound with sand matting and cement plaster to make them fully water tight.

In areas having considerable rainy season, cable entry from outside to inside of any building shall be done at elevated levels or at least above FFL so that cable entry points never become water leakage points inside building.

Cable markers shall be provided on either side of road crossing at each turning and at 30 m intervals at straight runs for underground cables.

3.10.2 Cable Installation in Overhead cable gallery/ tunnels/surface ducts/on structures

All the cable trays shall be in horizontal laying configurationalong the horizontal run of the cable.Cable racks for cable trays shall be fixed at a maximum interval of 1.5 m.

Cables shall be laid in separate racks according to the voltage / application classification. Fireproof partitions such as asbestos sheets shall be provided between trays carrying LT & HT power cables. The cables shall be laid from Bottom to Top in order of HT on Bottom rack followed by LT cables and other cables on upper racks. Signal/instrumentation cables shall be laid on top rack.

Cables shall be suitably protected against heat, and mechanical damages.

Cables at fire partition wall crossings shall be painted with flame retardentpaint 2 m on either side of wall.

3.10.3 Cable Trays &Structural support for cable laying

In general pre-fabricated GI cable tray only shall be used unless other type i.e. MS or FRP is specified in TS.

Power cables shall be laid on ladder type cable trays& control/signal cables shall be laid on perforated trays. Communication cables, FO cables shall be laid inside separate GI Conduits.

© 2022 MECON Limited All rights reserved

Ladder type cable trays shall be selected from sizes 300 mm, 450 mm & 600 mm. Standard length of trays shall be 2.5/3.0mtr. Perforated cable trys can also be below 300mm width as per the requirement.

GI ladder type trays shall be pre-fabricated from 2 mm thick sheet steel hot dip galvanized.GI perforated type trays shall be pre-fabricated from sheet steel of min. 3 mm thick with Hot dip galvanizing. For GI trays, method of hot dip galvanizing shall conform to IS 2629:1985. Mass & thickness of zinc coating shall conform to IS 4759:1996. However, minimum thickness of GI coating shall be 75-86micron. In case of ladder type trays, C channel shall be used for longitudinal member & cross member with holes for cable binding shall be provided at interval of max 250mm throughout the length of tray. Generally pre-fabricated bends, joints, junction connectors shall be used. However, site fabricated bends, joints, junction connectors may be used at places, where it is not possible to use pre fabricated in consultation/approval from site engineer.

MS trays (if applicable) shall be fabricated from 50x50x6 mm MS angles for longitudinal members and 25x5 mm flats for cross members placed at an interval of 250 mm along the length of cable tray. The MS cable tray shall be painted with twocoats of red oxide primer (Zinc cromate) and a top coat of finishing enamel paint as approved. Paint shall be removed at appropriate location before installation of earthig strip and repainted after installation of earthing strip. Minimum thickness of painting shall be 120 microns.

Supporting vertical racks and horizontal hooks shall be of 50x50x6 mm MS angles except in cable cellar/ basement. Cable racks and hooks shall be of welded construction.

Inside cable cellar/basement, min. ISMC-100 shall be used for supporting cable trays. The ISMC-100 shall be supported from roof beam and fixed with floor so that load transfer takes place to ground. In case, numbers of trays are less (2 or 3), same can be supported from roof only with min. ISMC- 75.

To avoid damage during cable laying, cable structures shall have no scales, abrasive or rough surfaces or cutting edges.

Wherever Cable Trays are installed in parallel formations, they shall have minimum distance (or gap) of 250 mm or higher as per requirement.

3.10.4 General requirement of cable installations

All cables shall be tested for proper insulation before start of laying work.

Cables shall be laid in conduits, racks/trays, cable tunnels/trenches, along with structures or buildings, as per cable routing drawing and cable list. Suitable adjustment shall be made in cable routes, if required at site, with a view to avoid any interference with any part of building, structures, equipment, utilities and services with the approval of the purchaser/ consultant.

In the cable basement/ Cellar/ cable galleries/ tunnel, cable structures shall be properly arranged giving sufficient clearance for movement of personnel from one part of the basement/ Cellar/ cable galleries/ tunnel to the other. It shall also be possible to escape easily in case of fire.

Cables shall be clamped rigidly at an interval of not more than 1000 mm in horizontal, and 500 mm in vertical & inclined run and at bends.Cable shall be fixed to racks or trays or cleats as required for proper support, accessibility and neatness of installation. Hanging of cables racks

© 2022 MECON Limited All rights reserved

over panels shall not be permitted rather no cable shall be laid/pass over any electrical equipment e.g. transformer, switchboards etc.

Cable passing through water/scale pit/acid fume etc. shall be laid in PVC pipe with PVC junction boxes and pull boxes etc. Where cable racks or trays cannot be erected or the number of cables on the route does not justify their use, cables shall be cleated direct to walls or structural steel work in consultation/approval from site engineer.

Not more than one cable (for power cable) shall be drawn into one conduit unless otherwise agreed. After the cable has been drawn in, the conduit shall be sealed by an approved means.
Fire protection barrier as approved by purchaser shall be provided between HT cables racks and LT power cables racks.

While laying cables, care shall be taken that kinks, twists or mechanical damage do not occur to the cable.

All bends in cables shall be made with due consideration to the minimum permissible bending radius of the cables.

Loops shall not be allowed to be formed during the laying of the cables. When being pulled, the cable shall not be allowed to drag drawing along the ground or over a second cable already laid. Special care shall be taken while pulling through an opening where other cables have already been laid. Only approved cable pulling devices shall be used.

No joints shall normally be made at any intermediate point in through run of cables unless the length of the run is more than the standard drum length. In such cases where jointing is unavoidable, the same shall be made inside proper bases having plastic moulds and shall have moulded epoxy resin construction. Provision shall be made for earthing continuity at the joint. Cable splicing and jointing shall be done in accordance with the relevant IS, code of practice and manufacturer's instructions. Insulation resistance of cables shall be checked before cable jointing.

Adequate length of cables shall be pulled inside the switch boards, control panels, control desks, etc. so as to permit neat termination.

All cables shall be neatly dressed without interlocking or cross overs. While laying the cable vertically, these shall be clamped at suitable intervals. Horizontal runs shall be rigidly secured to trays on racks/hangers in all the places where the direction of the route changes as well as at cable terminations or joints. The clamps shall not be done up so tight that the insulation is damaged or deformed.

All cable entry openings in the equipment shall be sealed and made vermin proof. All cable openings in walls and floors shall be sealed after laying of cables by a weak mixture of asbestos and cement mortar.

All cables shall be provided with identification tags indicating the cable number in accordance with cable lists. Tags shall be fixed at both ends of the cable and at 30 m spacing for straight runs as well as on both sides wherever cables are crossing walls/floors.The tags shall be of aluminium/PVC with numbers engraved on them and securely attached to the cables by non-corrosive wires. The shape of tags shall be round, triangular and rectangular for control, medium voltage and high voltage cables respectively.The cable tags shall be marked with

© 2022 MECON Limited All rights reserved

cable number, size and voltage grade. Start tag shall be indicated with destination. The end tag shall be with second terminal point.

Suitable numbered printed ferrul orcoloured letter interlocking type ferrules shall be provided for end termination of power and control cables.

Control cable entering switch boards, control panels, control desks etc. shall be neatly bunched and strapped with PVC perforated straps and suitably supported to keep it in position at the terminal blocks. All spare cores of each cable shall be segregated, marked spare, neatly dressed and suitably tapped at both ends.

When the cores of two or more multicore cables take a common route in side equipment, cores of each cable shall be separately bound and the separate bundles neatly bound together.

The contractor shall be responsible for correct phasing of motor power connections and shall interchange connections at the motor terminals box, if necessary, during each motor is test run.

3.11 Cable Joint/termination accessories

3.11.1 For HT Cable

The cable accessories shall include end termination kits, straight through joints and also any special tool and tackles and accessories required for making the joints/terminations.

The straight through joint/termination arrangement shall be complete with all fittings and consumables. The joint/ termination shall have electrical and mechanical withstand capability, same as that of the associated cable. For all cables, a minimum extra length of 2 metresshall be left before jointing.

The termination/ jointing kit shall be of heat shrinkable type, unless specified otherwise in TS.

The termination kits/straight through joints shall have the following features:

- Electrical stress control to be provided at the cable insulation shield terminus.
- An external leakage insulation to be provided between the cable conductors and ground.
- Adequate protection to be provided at the end of the cables against the entrance of the moisture and, provision to maintain the constant pressure in the cable.

3.11.2 For LT Power and control cable

The cables shall be terminated in accordance with relevant connection diagram. Termination and clamping shall be carried out in such a manner as to avoid strain on the terminals.

Glanding shall be done for direct entry of both power and control cables into the panels/ enclosures by the contractor. Double Compression type brass cable glands shall be used. Crimping type tinned copper lugs only shall be used for all cable termination

All power & control cable terminations shall be by means of crimping type cable lugs. For flexible conductors, soldered termination shall be adopted. In case of aluminium power cables

© 2022 MECON Limited All rights reserved

termination on copper bus bars, suitable aluminium copper bimetallic washers shall be used. Corrosion inhibiting grease shall be used for aluminium cable terminations.

3.12 Exposed & Concealed conduits

Exposed conduits shall be laid along walls, floors, ceilings, on steel supports etc. as per working drawings/site requirements in consultation with the supervisory personnel. The conduits shall be neatly run and evenly spaced.

Fixing of conduits to the supports on wall, column, structure shall not be done by welding. Exposed conduits shall be adequately supported by racks, clamps, straps etc.

Jointing of conduits shall be done only in straight portion and not in bend portion.

The contractor shall have arrangements at site for bending facilities for conduits as well as dies for threading conduits of diameters and threads corresponding to the standards. The threaded ends of conduits shall be painted with anticorrosive paint. The outer ends shall be smoothened free of burrs and sharp edges. Bushings shall be fitted at both ends of conduits.

Flexible metallic conduits shall be used for termination of connections to motors and other electrical equipment like pressure switches etc. which need to be disconnected at periodic intervals.

All conduits shall be effectively connected to the earth terminal of the equipment where it terminates.

Both ends of conduits shall be suitably earthed. Earthing continuity to be maintained by means of flexible wire wherever two conduits are joined with sockets.

Approved conduit bending machines to be arranged by the contractor shall be used for bending conduits at site. The radius of any conduit bend shall be as per standards for cabling. Bends shall be free from cracks, crimps or other damage to the pipe or its coating.

Annular space of used & un-used conduits should be sealed at both ends.

© 2022 MECON Limited All rights reserved

4.0 FACTORY TESTING

Test on all equipment shall be conducted as per latest edition of Standards IS/ IPSS/ IEC/VDE/DIN/BS as applicable as per the respective equipment specification.

All external components and fittings that are likely to affect the performance of the equipment shall be put in place during the factory test and the test shall be carried out at the manufacturer's works, unless otherwise agreed between the purchase and the manufacturer.

The contractor shall arrange to conduct Routine test/ Acceptance test as applicable on all equipment at manufacturer works as per latest applicable standard as referred in technical specification. At least following routine tests, as listed below, shall be conducted by the supplier for each supply. Any additional test as per the standard procedure of the manufacturer shall also be conducted. Also purchaser may ask for conducting other tests as per the relevant standard in case the same is applicable.

All routine test/ acceptance tests as applicable shall be carried out at manufacturer's works in the presence of the contractor and purchaser or purchaser's representative.

Type test certificates shall be submitted for tests conducted earlier on equipment having same/ similar rating & design that of being supplied. The rating and design of equipment being supplied may be stringent that the type tested design and the same shall be vetted by purchaser or its representative during the inspection of the panel. In case valid type test certificate is not available with the supplier, the same shall be conducted in the presence of Purchaser or Purchaser's representative, if purchaser so desires, without any financial implications to the purchaser. The type test certificate shall be provided for the same manufacturing unit from where supply is being made. All type test reports shall be from NABL accredited government or semi government or independent third party laboratory / equivalent foreign laboratory.

At least type test certificates for the following tests listed shall be submitted by the supplier for each supply. However purchaser may ask for other type test certificates as per the relevant applicable standard.
The Contractor shall be responsible for satisfactory working of eachequipment and complete system in an integrated manner and its guaranteed performance.

4.1 HT Switchboards

4.1.1 Routine tests

1) Physical, dimensional and fitment & alignment checks including:
   - i) Checking with respect to general arrangement like feeder disposition, appearance, terminations, wiring etc.
   - ii) Checking of mechanical work like fitment and alignment, surface finish, movement and proper engagement of withdrawable breakers, fixing of doors, etc.
   - iii) Verification of BOQ.
   - iv) Interchangeability of drawout breakers of the same rating.
2) Operational, functional & interlock Checks with respect to single line diagram and control circuits.
3) Operation test for circuit breakers etc. with normal control voltage and closing at 85-110% and trip at 70-110% of normal control voltage.

© 2022 MECON Limited All rights reserved

4) Tests to check polarity of CTs and primary injection test
5) Insulation test and Dielectric test of the switchboard.
6) Checking of protective earthing circuits
7) Measurement of total contact resistance for feeders.
8) Breaker closing/ opening time & contact resistance for 20% of the breakers.

4.1.2 Type tests

1) Short circuit breaking, making & withstand capacity of all CB ratings used.
2) Mechanical and electrical endurance test of all CB ratings used.
3) Short circuit withstand capacity of switchboard.(For same rating &same design of switchboard)
4) Internal arc withstand test for switchboard as per IEC 62271-200. (For same design of switchboard & enclosure)
5) Temperature rise test as per IEC 62271-200. (For same rating & same design of switchboard)
6) Impulse withstand test as per IEC 62271-200. (For same voltage rating & same design of switchboard)
7) Double earthfault test (for switchboard used in unearthed system)

4.2 Distribution Transformer (Oil Type)

4.2.1 Routine Tests

1) Physical, dimensional and fitment & alignment checks
2) Operation and function checks
3) Measurement of winding resistance
4) Measurement of voltage Ratio and voltage vector relationship
5) Measurement of Impedance Voltage/Short-circuit impedance (Principal Tapping) and Load Loss at 50% and 100% load
6) Measurement of No-load Loss and No-load Current
7) Measurement of insulation resistance
8) Induced overvoltage withstand test.
9) Separate source voltage withstand test
10) Pressure test
11) Oil Leakage test
12) Painting checks
13) Measurement of Acoustic Noise level (As per cl 5.10.3.6 of IEEE C57.12-01)

4.2.2 Type Tests

1) Lightning impulse test (for same voltage rating and similar design)
2) Temperature Rise test (for same rating & same design, conductor sizes and enclosure type & size to match)

© 2022 MECON Limited All rights reserved

3) Short Circuit Test (for similar rating & design confirming to requirement as per IEC 60076 (Part5, AnnexB))
4) Measurement of commutating reactance and determination of inductive voltage drops (for thyristor converter transformer only).
5) Ingress protection test report for Marshalling Box

4.3 Distribution Transformer (Dry Type)

4.3.1 Routine Tests

1) Physical, dimensional and fitment & alignment checks
2) Operation and function checks
3) Measurement of winding resistance
4) Measurement of voltage Ratio and voltage vector relationship
5) Measurement of Impedance Voltage/Short-circuit impedance (Principal Tapping) and Load Loss
6) Measurement of No-load Loss and No-load Current
7) Separate source voltage withstand test
8) Induced overvoltage withstand test.
9) Partial discharge measurement test (As per cl 22 of IEC60076-11)
10) Measurement of Acoustic Noise level (As per cl 5.10.3.6 of IEEE C57.12-01)

4.3.2 Type Tests

1) Lightning impulse test (for same voltage rating and similar design)
2) Temperature Rise test (for same rating & same design, conductor sizes and enclosure type & size to match)
3) Short Circuit Test (for similar rating & design confirming to requirement as per IEC 60076 (Part5, AnnexB)
4) Ingress protection test report for Marshalling Box
5) E2 / C2 / F1 Test certificate according to IEC 60076-11.

4.4 LT Busduct

4.4.1 Routine Tests

1) Physical, dimensional and fitment & alignment checks
2) Verification of clearances and creepage distances
3) Dielectric test (PF withstand test) on main circuit
4) Dielectric test (PF withstand test) on auxiliary and control circuit
5) Insulation resistance test before and after HV test
6) Measurement of resistance & Reactance of the main circuit

4.4.2 Type Tests

1) Temperature Rise test (for same rating, same design, same conductor & enclosure type & size)
2) Short Circuit Test(for same rating, same design, same conductor type & size, similar busbar support arrangement)

© 2022 MECON Limited All rights reserved

3) Ingress protection (for same design and similar construction)

4.5 Power Control Centre and LT Switchboard

4.5.1 Routine Tests

1) Physical, dimensional and fitment & alignment checks including:
   i) Checking with respect to general arrangement like feeder disposition, appearance, terminations, wiring etc.
   ii) Checking of mechanical work like fitment and alignment, surface finish, movement and proper engagement of withdrawable breakers, fixing of doors, etc.
   iii) Verification of BOQ.
   iv) Interchangeability of drawout breakers of the same rating.
2) Operational, functional & interlock Checks with respect to single line diagram and control circuits.
3) Operation test for circuit breakers etc. with normal control voltage and closing at 85-110% and trip at 70-110% of normal control voltage.
4) Tests to check polarity of CTs and primary injection test
5) Insulation test and Dielectric test of the switchboard.
6) Checking of protective earthing circuits
7) Measurement of total contact resistance for feeders.

4.5.2 Type Tests

1) Short circuit withstand capacity of switchboard. (For same rating &same design of switchboard)
2) Temperature rise test. (For same rating & same design of switchboard)
3) Impulse withstand test. (For same voltage rating & same design of switchboard)
4) Internal arc withstand test for switchboard as per IEC 61641. (For same design of switchboard & enclosure)
5) Ingress protection test (for same design and similar construction)

4.6 Battery Charger

4.6.1 Routine Tests

1) Physical, dimensional and fitment & alignment checks including:
   i) Checking with respect to general arrangement like feeder disposition, appearance, terminations, wiring etc.
   ii) Checking of mechanical work like fitment and alignment, surface finish, fixing of doors, etc.
   iii) Verification of BOQ.
2) Operational, functional & interlock Checks with respect to single line diagram and control circuits.
3) Dielectric test.
4) Ripple Content

© 2022 MECON Limited All rights reserved

5) Load test

4.6.2 Type Tests

1) Ingress protection test

2) Other type test reports as per the applicable standars to be finalized during DE along with the manufacturer.

4.7 MCC/PDB/MLDB/CONTROL PANELS/SOFT STARTERS/MCPs/VFDs

1) Checking of GA, size, shipping length, enclosure class, sheet steel thickness, colour shade and other constructional features as per approved drawings/documents/data sheet.
2) Checking of door opening, cable alley, cable termination facility, cable gland plate size etc.
3) Checking of alignment of draw out modules, proper movement & positioning.
4) Checking of component lay out inside module, component layout on door front, wiring, termination etc.
5) Checking of BOQ, rating, make, model numbers etc. as per approved drawings/documents/data sheet.
6) Powering/charging of incomers, bus couplers and all feeder modules and checking all components, meters, indication lamps etc.
7) Functional/Operational test of incomer, bus coupler & all out going feeders as per approved drawings/control scheme.
8) Communication checking of all communicable relays/meters if possible & checking of completion of wiring etc.
9) Safety interlock checking, checking of working of Em. Stop PB, PCS/BSS/ZSS/Limit switch working in circuit etc.
10) Checking of interlocking between incomers/ bus couplers and other feeders
11) Test of prove interchangeability of similar parts.
12) Checking of earthing connection for neutral-earth bus, cable armour, location of E/F CT etc. as per the scheme.
13) Checking of tests, service and drawout position of all the feeders as applicable.
14) Checking the functioning of various electrical schemes like auto change over, signaling etc.
15) IR test
16) HV test with 2.5 kV megger
17) Checking of all Test reports, test certificates, calibration certificates of all meters, relays, etc.

4.8 PLC/Automation System (FAT Hardware & Software)

1) Checking of GA, size, shipping length, enclosure class, sheet steel thickness, colour shade and other constructional features as per approved drawings/documents/data sheet.
2) Checking of door opening, cable alley/marshalling box, cable termination facility, cable gland plate size etc.
3) Checking of component lay out inside module, component layout on door front, wiring, termination etc.
4) Checking of BOQ, rating, make, model numbers etc. as per approved drawings/documents/data sheet.
5) Powering/charging of panel, checking of power supply distribution and checking all wiring of IO cards, components, meters, indication lamps etc.
6) Network checking,

© 2022 MECON Limited All rights reserved

7) Checking of power supply & distribution.
8) Checking of provision of electronic & panel earthing & earthing of all panels/electronics equipment as per manuals/manufacturer's recommendation.
9) Checking of redundancy of network, CPU, Servers and other hardware as per configuration drawing.
10) Checking of Software under simulation, checking & modification of Graphics, Reports and correction/revision as required by process/site requirement etc.
11) Checking of safety & process interlocks and correction as required by process/site requirement, Checking of local & remote manual, auto mode of operation, release of outputs, calibration etc.
12) PID loop setting, calibration
13) Communication checking with all networking equipment as per configuration drawing and establishment of communication with third party equipment.
14) Tenderer shall submit FAT procedure segregating Hardware FAT & Software FAT indicating above tests for approval of purchaser/consultants during engineering. Hardware FAT shall be carried out on each and every automation equipment, whereas software FAT shall be carried out retaining few minimum equipment to be finalized with FAT procedure. Hardware FAT & Software FAT can be carried out together or in stages as per approved FAT procedure.

4.9 Final Test of Materials of Grounding and lightning system

i) Visual check

ii) Dimensional check

iii) Accessories fitting check

iv) Mechanical and electrical test (where applicable)

4.10 CABLES

4.10.1 Routine test

1) The cables shall be subject to shop tests in accordance with relevant specified standards to prove the design and general qualities of the cables
2) Routine test as per the applicable standard indicated in the technical specification shall be carried out on each drum of cables.

4.10.2 Acceptance test

1) Acceptance tests as per the applicable standard indicated in the technical specification shall be carried out on the drum chosen randomly as per the sampling plant for acceptance of the lot.

4.10.3 Type Test

1) Type tests certificates for each type of cable, as per the applicable standard shall be furnished by the contractor

4.11 Motors

© 2022 MECON Limited All rights reserved

4.11.1 Routine Tests

1 Measurement of resistance.
2 Insulation resistance test.
3 Motors are tested at 1/3 times the rated voltage for checking the ability of the motor to run upto full speed , when switched in either direction.
4 No load test.
5 High voltage test.

4.11.2 Type Tests

1 Measurement of rotor resistance.
2 No load test
3 Locked rotor test .
4 Full load reading of voltage, current , power input and slip.
5 Temperature rise test.
6 Momentary overload test .
7 Insulation resistance test .
8 High voltage test .
9 Polarisation index test (for HT motors)

© 2022 MECON Limited All rights reserved

5.0 SITE TESTS AND CHECKS

5.0 SITE TESTS AND CHECKS

5.1 General

All the equipment shall be tested at site to know their condition and to prove suitability for required performance after installation and before commissioning.

The test indicated in following pages shall be conducted after installation. All manpower, tools, accessories and required instruments shall have to be arranged by the contractor. Any other tests/ checks considered necessary by the OEM/ Contractor / commissioning manual of the equipment has to be conducted at site.

In addition to tests on individual equipment some tests/checks are to be conducted/observed from overall system point of view. Such minimum tests/ checks are highlighted under miscellaneous tests. However these shall not be limited to as indicated and shall be finalisedin consultation with client and consultant before charging of the system.

Based on the test results clear observation shall be indicated by testing engineer regarding suitability for charging of the equipment or reasons for not charging.

All checks and tests shall be conducted in the presence of Client or its representative and witnessed test results shall be submitted in six copies to Client and one copy to Electrical Inspector. Test results shall be filled in appropriateproforma cleared by the client or its representative.

Taking necessary clearance from electrical inspector is the responsibility of the contractor. After clearance from Electrical Inspector, system / equipment shall be charged in step by step method.

The Contractor shall be responsible for satisfactory working of complete integrated system and guaranteed performance.

5.2 Trial Run Test

After the successful test of each equipment as per standard test procedure, the entire system shall be put on trial run test on actual site conditions and operation.

5.3 Acceptance Test

The acceptance test on the system shall be carried out by the contractor as per mutually agreed test procedures to establish satisfactorily functioning of the system as a whole and each equipment as part of the system.

5.4 Site Tests

The tests to be carried out on the equipment at pre-commissioning stage shall include but not limited to the following minimum tests:

5.4.1 HT SWITCHBOARD

1) Complete wiring check for proper functioning for each feeder and feeder wise field markup drawing to be prepared, signed by testing agency and the contractor and one set to be handed over to client.
2) Checking of all mechanical and electrical interlocks in each feeder.
3) Auto changeover and momentary paralleling scheme checking (if applicable)
4) Functional test of all circuit components for each panel/ feeder.

© 2022 MECON Limited All rights reserved

5) Test to prove correct operation of breakers at minimum and maximum specified control voltages
6) Checking of PTs for polarity, ration & connection
7) Testing of CT polarities and CT ratio by primary injection test.
8) Measurement of knee point voltage and secondary resistance for CTs used for differential protection.(If applicable)
9) Secondary injetion tests on Relays and meters.
10) Testing of relays as per supplier's commissioning manual
11) Contact resistance/ millivolt drop test for each feeder and breaker.
12) IR test before & after HV test.
13) HV test.
14) Overall Integrated Testing of Switchboard.

5.4.2 DISTRIBUTION/ CONVERTER TRANSFORMER (OIL TYPE)

1) IR test on each winding to ground and between winding and check for polarization index.
2) Turns ratio test on each tap.
3) Polarity and vector group test.
4) Conducting magnetic balance test.
5) Measurement of magnetizing current and no load loss.
6) Measurement of winding resistance by Kelvin bridge.
7) Checking of earthing w.r.t. transformer tank (flexible from top cover to tank) other parts, neutral.
8) Testing of Buchholz relay for alarm and trip conditions.
9) For bushing CTs, tests applicable shall be as per manufacturer.
10) Check insulators for cracks - Physical.
11) Checking for oil leakage -Physical.
12) Checking of operation of all valves.
13) Checking of silica gel breather - Physical.
14) Filtration of oil by using line filter and heater set.
15) BDV test on Oil samples from top & bottom after filteration.
16) Checking of Oil for acidity, water content and tan delta as per IS 335.
17) IR, wiring and operational tests on marshalling box componenets, oil level indicator winding and oil temp. indicatorsetc.
18) Calibration and setting of oil/winding temperature indicators, level gauge.
19) Checking of other points given in manufacturer's commissioning manuals.

5.4.3 DISTRIBUTION/ CONVERTER TRANSFORMER (DRY TYPE)

1) IR test on each winding to ground and between winding and check for polarization index.
2) Turns ratio test on each tap.
3) Polarity and vector group test.
4) Conducting magnetic balance test.
5) Measurement of magnetizing current and no load loss.
6) Measurement of winding resistance by Kelvin bridge.
7) Checking of earthing w.r.t. transformer enclosure, neutral etc.
8) For bushing CTs, tests applicable shall be as per manufacturer.
9) IR, wiring and operational tests on marshalling box componenetsetc.
10) Checking of other points given in manufacturer's commissioning manuals.

© 2022 MECON Limited All rights reserved

5.4.4 LT BUS DUCT

1) IR measurement before and after HV test.
2) HV test.
3) Checking tightness of bolts with torque wrench.
4) Checking for phase sequence marking.
5) Check for clearances between phase to phase and phase to earth.
6) Check for minor damages and cracks in supporting insulators and bushings after cleaning.
7) Checking for inspection openings and accessibility for replacement of insulator etc.
8) Check tightness of earthing connections on enclosure.
9) Checking of silica gel breather (if there).
10) Checking of working of space heater.

5.4.5 POWER CONTROL CENTRE AND LT SWITCHBOARD

1) Complete wiring check for proper functioning for each feeder and feeder wise field markup drawing to be prepared, signed by testing agency and the contractor and one set to be handed over to client.
2) Checking of all mechanical and electrical interlocks in each feeder.
3) Auto changeover and momentary paralleling scheme checking (if applicable)
4) Functional test of all circuit components for each panel/ feeder.
5) Test to prove correct operation of breakers at minimum and maximum specified control voltages
6) Checking of PTs for polarity, ration & connection
7) Testing of CT polarities and CT ratio by primary injection test.
8) Secondary injetion tests on meters.
9) Testing of releases as per supplier's commissioning manual
10) Contact resistance/ millivolt drop test for each feeder and breaker.
11) IR test before & after HV test.
12) HV test.
13) Overall Integrated Testing of Switchboard

5.4.6 BATTERY

1. Checking of layout as per approved drawing.
2. Visual inspection test for level and leakages.
3. Checking for availability of safety devices, water and first aid box.
4. Checking of adequacy of charger output/ requirement w.r.t current required for battery charging as per the manual.
5. Checking the polarity of connections between battery and charger.
6. Checking of tightness of connectors on each cell.
7. Checking of voltage per cell and total voltage between positive negative and earth to positive/ negative.
8. Checking of capacity test and hourly measurement of specific gravity and voltage for each cell.

5.4.7 BATTERY CHARGER

1. IR test before and after HV test
2. HV test
3. Checking the voltage ratio of boost and float mode transformers
4. Checking for charging mode of batteries, constant current and constant voltage mode.

© 2022 MECON Limited All rights reserved

5. Load test on chargers by liquid resistance system.
6. Checking of tightness of earthing connections.
7. Checking for all alarm conditions.
8. Checking and calibration of all indicating meters.
9. Check for functional operation of charger, auto/ manual change over from float to boost and boost to float etc.
10. Checking and setting of all relays.
11. Checking for polarity of cables connected to battery.

5.4.8 MCC/PDB/MLDB/CONTROL PANELS/SOFT STARTERS/MCPs

1. IR test.
2. HV test with 2.5 kV megger.
3. Functional test for all feeders.
4. Testing and calibration of all meters.
5. Checking and calibration of overload relays and protective relays by primary injection method.
6. Check operation of contactors from local and remote/PLC modes from control room.
7. IO checking.
8. Communication checking.
9. Safety interlock checking, checking of working of Em. Stop PB, PCS/BSS/ZSS/Limit switch working in circuit etc.
10. Checking of interlocking between incomers/ bus couplers and other feeders.
11. Test of prove interchangeability of similar parts.
12. Checking of earthing connection for neutral-earth bus, cable armour, location of E/F CT etc. as per the scheme.
13. Checking of tests, service and drawout position of all the feeders as applicable.
14. Checking the functioning of various electrical schemes like auto change over, signaling etc.

5.4.9 VFD

1. IR test.
2. Checking of earthing connection earthing as per scheme.
3. Safety interlock checking, checking of working of Em. Stop PB.
4. Functional/Circuit wise test, Check operation of contactors from local and remote/PLC modes from control room.
5. IO checking.
6. Setting of all parameters/parameterization.
7. Idle running of VFD and motor for tuning/parameterization.
8. Testing and calibration of all meters.
9. Communication checking with plant automation.

5.4.10 PLC/AUTOMATION SYSTEM

1. Network checking.
2. Checking of power supply & distribution.
3. Checking of electronic earthing system and proper earthing of all panels/ electronics equipment as per manuals/manufacturer's recommendation.
4. Checking of redundancy of network, CPU, Servers and other hardware as per configuration drawing.
5. Checking of Software under simulation, checking & modification of Graphics, Reports and correction/revision as required by process/site requirement etc.
6. IO checking and rectification.

© 2022 MECON Limited All rights reserved

7. Checking of safety & process interlocks and correction as required by process/ site requirement, Checking of local & remote manual, auto mode of operation, release of outputs, calibration etc.
8. PID loop setting, calibration.
9. Communication checking with all networking equipment as per configuration drawing and establishment of communication with third party equipment.
10. Check operation of contactors from local and remote/PLC modes from control room HMI.
11. Safety interlock checking, checking of working of Em. Stop PB.

5.4.11 MOTORS

1. Insulation resistance (IR) test.
2. Continuity Test.
3. Checks for leveling, & fitment, Bolt tightness & other matching with mechanical equipment.
4. Check for earthing (Body earthing, cable 4th core earthing inside motor TB).
5. Checks for Cable termination, continuity, phase sequence.
6. Checks for cable termination for space heater, RTD/BTD if any.
7. Direction of rotation under de-coupled condition.
8. Check for noise, vibration etc.
9. Check motor no load current under idle condition & FLC under loaded condition.

5.4.12 CABLES

1. Visual check for proper laying and dressing of cables.
2. Checking of continuity and IR values for all the cables before and after HV test.
3. HV test and measurement of leakage current.
4. HV test and measurement of leakage current after termination of cable termination kits (for HT cables only).
5. Checking of earth continuity for armour and fourth core (as applicable).
6. Check for mechanical protection of cables - Visual.
7. Check for proper dressing of cables, mechanical protection of cables, placement of cable markers, placement of cable identification tags etc.
8. Check earthing of cable support structures and trays.
9. Check safe head room in tunnel and basement area.
10. Check clearance from ventilation duct and light fittings for cable structures.
11. Check proper fixing of cable support structures and trays.
12. Check tightness of all connections.

5.4.13 EARTHING

1. Check tightness of all earth connections.
2. Check earthing of all metallic equipment, cable trays, busbar supporting. structures, building column (if steel) all elect equipment, pipe lines etc. as per the drawing/specification.
3. Measurement of earth resistance for each electrode.
4. Measurement of total earth resistance.
5. Measurement of earth loop resistance for E/F path of biggest LT drive.

5.4.14 MISCELLANEOUS

1. Checking of continuity of the system.
2. Checking of phase sequence from overhead line consumer end.
3. Checking safe accessibility of all operating points.
4. Check availability of emergency lighting.

© 2022 MECON Limited All rights reserved

5. Check availability of control aux. supply.
6. Ensure availability of all safety items egfirst aid box, firefighting equipment, earth discharge rods, rubber mats, rubber glove etc.
7. Check oil drainage system for transformer oil.
8. Check filling of gravels in transformer pits.
9. Check for safe movement of operators control room / switchgear etc., w.r.t. proper illumination, escape light, uncovered openings, provision of hand railings in stairs etc.
10. Check proper covering of cable channels.
11. Placement of shock treatment chart, danger boards provision of boards indicating ‘Man on work’ Do not switch ON’ ‘Do not switch OFF’. ‘EARTHED’ etc.
12. Provision of route map at gallery entry points for indication of escape.
13. Check proper dressing of cables, mechanical protection of cables, placement of cable markers.
14. Check sealing of all cable openings including conduits opening with fire resistance material.
15. Check sealing of all openings at bottom of electrical panels.
16. Check for proper drainage and removal of water

© 2022 MECON Limited All rights reserved

UTKARSHA ALUMINIUM DHATU NIGAM LIMITED

GENERAL TECHNICAL SPECIFICATION FOR IP BASED PLANT COMMUNICATION, CCVM & FIRE DETECTION AND ALARM SYSTEM (GS 03 PART-II)

MECON LIMITED
RANCHI – 834 002

No. MEC/S/11/35/Q7R6/GTS/01/R0 **JUNE' 2022**

© 2022 MECON Limited All rights reserved

LIST OF CONTENTS

PART – II

PLANT COMMUNICATION,CCVM& FIRE DETECTION AND ALARM SYSTEM

Clause No.	Contents	Page No.
1	Hot Redundant Intelligent Type Fire Detection & Alarm System	03-21
2	IP Based Public Address System	21 - 28
3	IP Based CCVM System	29 – 41
4	VHF Communication System	42 – 46
5	Server Based IP-PBX System	46 – 67
6	Plant Telephone Cables & Accessories	68 - 69

© 2022 MECON Limited All rights reserved

1.0 HOT REDUNDANT INTELLIGENT TYPE FIRE DETECTION & ALARM (FDA) SYSTEM

1.1 GENERAL SCOPE

This section covers the technical requirement for Intelligent Addressable Microprocessor based automatic Fire Detection and Alarm System (FDAS).

The FDA system shall cover design, engineering, manufacture, packing & supply, erection, installation, testing & commissioning of the FDA system.

The FDA system consist of mainly following equipment:

- Smoke detectors, Heat detectors, Multi criteria detectors (combination of rate of rise heat detector & photo electric smoke detector), Flame detectors, Linear Heat Sensing cables (LHS) and other types of detectors as per Indian Standards/NFPA norms.
- Fire Alarm Control Panels (FACP), Repeater Panels/ Annunciation panel complete with power supply equipment, Battery back up of 24 hours normal operation and 15 mins for alarm condition, in case of power failure.
- Manual Call Points/Manual pull station
- Hooters. Sirens, Waning lamps etc.
- Isolators, Interface Modules.
- Response indicators etc.
- PC and printer

The FDA system shall be supplied complete with following to make the installation complete

- Fire Exit boards at all locations
- Dedicated suitable capacity U.P.S system or 240V UPS power supply from Main plant UPS system.

© 2022 MECON Limited All rights reserved

- All types of cables (Power, control, signal cables – all FRLS type) and cabling accessories with Class A wiring conforming to IS
- Erection materials
- Earthing&Earthing Materials
- Furniture, Racks etc.
- All civil works required for installing FDA System equipment as required.
- GI pipes /GI conduits /PVC rigid conduits, Flexible pipes, Junction Boxes, Pull Boxes and other accessories wherever required for laying of cables.
- Trench work, if required, for under ground cabling.
- All erection accessories, consumables and miscellaneous material not indicated in specification but required for completing the job in all respects.
- Commissioning spares till handing over of the system.
- Two years maintenance spares.
- Special tools & tackles for testing & maintenance of the system.

FDA system equipment like FACPs, Repeater panels / Annunciation panels, Detectors, Devices, MCPs etc. to be supplied shall have approval from UL/FM/VDS/LPCB.

All Detectors, Manual call points, LHS cable, Response indicators etc. shall be addressable type.

1.2 AREAS TO BE COVERED/PROTECTED BY FIRE DETECTION & ALARM SYSTEM & CHOICE OF FIRE DETECTORS.

All Electrical & Electronic equipment/panel rooms, HT & LT Substation buildings, MCC/MLDB/PDB rooms, HT & LT Transformer rooms, Capacitor bank/reactor rooms, Control rooms, control pulpits/cabins, UPS rooms, PLC rooms, RIO rooms, Level-1/2 Automation rooms, Server Rooms, Data centers, Computer rooms, Battery rooms, Cable cellars, Cable basements, Cable floors, Cable shafts, Cable tunnels, Telephone exchange

© 2022 MECON Limited All rights reserved

rooms, Office rooms, Conference rooms, Administrative building rooms, Management building rooms, Library, Laboratory rooms, Energy Management centers, any Corridors/reception hall associated with above buildings/rooms, Hydraulic rooms/Oil cellars, covered cable galleries etc.

False Floors, False ceilings, Cable trenches in electrical panel rooms/control rooms, if any, housing large numbers of cables shall be covered as per recommendation of relevant standards.

Following type of detectors shall be provided for different areas:-

Multi –Criteria detector shall be provided for all Electrical & Electronic equipment/panel rooms, HT & LT Substation buildings, MCC/MLDB/PDB rooms, Control rooms, control pulpits/cabins, UPS rooms, PLC rooms, RIO rooms, Level-1 & 2, Automation rooms, Computer rooms, Battery rooms, Telephone exchange rooms, Office rooms, Conference rooms, Administrative building rooms, Management building rooms, Library, Laboratory rooms, Energy Management centres, any Corridors/reception hall associated with above buildings/rooms, closed cable tunnel/cellars etc.

Control room, UPS room, PLC room, Computer room shall be provided with VESDA/VIEW (Very Intelligent Early Warning system).

Linear Heat Sensing Cables shall be provided for Cable tunnels, Cable cellars, Cable trussells**,**Cable basements, Cable floors, Cable shafts. LHS shall be laid minimum on alternate Cable trays.

Heat Detector with Fixed cum rate of rise shall be provided for HT & LT Transformer rooms, Capacitor bank/reactor rooms, Hydraulic rooms/Oil cellars etc.

Flame Detector shall be provided for Coal & coke conveyors and other areas as per site requirement.

1.3 APPLICABLE CODES AND STANDARDS

SL.NO:	CODE NUMBER		DESCRIPTION
1	IS 8757:1999	:	Glossary of terms associated with fire safety

© 2022 MECON Limited All rights reserved

2	IS-2189-2008	:	Code of practice for selection, installation and maintenance of automatic fire detection and alarm system (Fourth Revision)
3	IS 2175:1988	:	Specification for heat sensitive fire detectors for use in automatic fire alarm system
4	IS11360:1985	:	Specifications of Smoke detectors for use in automatic electrical fire alarm system
5	IS 1646:1997	:	Code of practice for fire safety of buildings (general): Electrical Installations
6	IS12456:1988	:	Code of practice for fire protection of electronic data processing installations
7	IS12459:1988	:	Code of practice for fire safety in cable runs
8	NFPA – 72	:	National fire alarm and signaling code.
9	UL-268	:	Smoke detector for fire alarm system
10	UL – 864,	:	Standards for safety for control units and accessories for fire alarm system
11	IS-9537 PART-II-1981	:	Specification for conduits for electrical wiring.
12	IS-694-1990	:	PVC insulated cables for working voltages upto and including 1100V (Third revision-Amendment-I)
13	IS-1554 PART-I-1998	:	PVC insulated (heavy duty electric cables part-I for working voltages upto& including 1100V (Third Edition-Amendment-I)
14	IS-10810 PART-53-1984 Reaffirmed in 1991	:	Method of test for cables part-53-flammability test
15	IS-3043-1987 Reaffirmed in 1991	:	Code of practice for earthing
16	Inspection & Testing.	:	As per QAP

Note:-

(i) Latest editions of all above standards shall be followed.

(ii) Some requirements as indicated in this Specification shall be followed, which may be more stringent to various standards.

The system shall have proper listing, comply & or approval of the following recognized agencies.

© 2022 MECON Limited All rights reserved

U.L. -- Under writers Laboratories Inc .U.S.A.

F.M. -- Factory Mutual.

VDS --Vertrauen durch Sicherheit

LPCB-- Loss Prevention Certification Board

NFPA – National Fire Protection Association.

IS – 2189

Tariff Advisory Committee (TAC).

Tenderer shall also take all required Approvals on supply and installation from statutory authorities, if required.

1.4 DESIGN REQUIREMENTS

FDA system and all equipment shall be designed and manufactured conforming to various Standards specified above. However, some specific requirement as indicated in this Specification shall be followed, which may be more stringent to various standards.

All equipment & component including Fire alarm control panels, detectors etc. shall be new & from MANUFACTURER'S latest model.

All equipment including Fire alarm control panels, detectors etc. shall be suitable for ambient temperature of minimum 50 Deg.C.

The Fire Detection and Alarm System shall be hot redundant,intelligent, microprocessor based digital addressable type system, software controlled automatic system to provide necessary programmed functions and various controls. The Fire alarm Control system shall consist of microprocessor based fire alarm control panelswith central processing units(CPU), Power supply, Interface module, Communication modules, LED type display unit, Printers, Graphics/Mimic display etc.

Fire Alarm Control Panel/system shall be provided with suitable number of N.O & N.C potential free contacts for Interlocking with AC & Ventilation system equipment in case of fire. Fire Alarm Control panel shall have facility for interface with local control panels of Fire Fighting system like gas Flooding/deluge valve controls etc.

All premises covered with automatic Fire fighting facilities like gas flooding system, water spray system etc. shall be provided with Fire detectors and connected to Fire alarm panel covered under this specification for integrated monitoring from control room.

© 2022 MECON Limited All rights reserved

The length of loop cable shall be maximum 1250 meters or as per manufacturer standard.

During Basic engineering, tenderer shall submit design basis indicating choice of detectors, spacing etc. conforming to GTS & Indian standards for approval of purchaser/consultant.

FDA system shall be provided with Cross zoning through Software before raising any alarm from any detector. Minimum 2 detectors shall be envisaged in each room/zone.

Diagnostics Features: The Control system shall be self diagnostic type, involving detection and alarm of any fault or open / short circuit in the system. On acknowledging, audio alarm is silenced while alarm indication/lamp persists, till rectification of fault.

The Control system shall have test mode facility to check the healthiness of the system.

Audio alarm for fault shall be different from fire signal alarm in tone and intensity.

Isolation of line in case of line faults and give alarm.

Resetting of the system shall be possible.

1.5 SPACING AND SITING OF DETECTORS AND MANUAL CALL POINTS(MCP):

1.5.01 SPACING GUIDE-LINE:

All protected areas/premises shall be provided with adequate numbers of detectors, MCPs conforming to Latest issue of Indian Standards norms IS-2189.

Sitting of Fire detectors and mounting of detectors, MCPs shall be as per latest Indian Standards. While deciding spacing, general rules, compensation to spacing of detectors etc. shall be followed.

Wiring of Fire detection & alarm system shall be class A type with return loop as per IS.

1.5.02 LOCATION OF MANUAL CALL POINTS (MCP)

© 2022 MECON Limited All rights reserved

At least one Manual Call Point/pull station shall be located at each entry / exit of protected premises/building / each alternate landing of staircases. The location shall be decided considering ease of operation, visibility and safety requirements.

In case of Transformer rooms, capacitor rooms, DG rooms at least one MCP shall be provided near each door approachable from outside. In case of Hydraulic rooms, Oil cellars, closed pump houses/shop units housing cable trenches, motors and other electrical panels, at least one Manual Call Station shall be provided at each entry/exit.

In case of shop floor/bays which is more than 30mtr long, at least one MCP shall be located at each entry/exit and at least one MCP shall be provided at every 30 mts. interval on all sides if, required. All stair cases shall be provided with manual pull points at every alternate landing and near to door entry. Where necessary, the travel distance may require to be reduced to less than 30M e.g. where there is difficulty in free access within the risk or in potentially dangerous risk.

Manual Pull stations points shall be fixed at a height of 1.4M above the surrounding floor level, at easily accessible, well illuminated and conspicuous positions which are free of obstructions.

Where the call points shall be housed in dust proof and moisture proof enclosure shall be properly sealed with rubber lining.

1.6 TESTS AND INSPECTION

All equipment shall be inspected at manufacturer's works. During inspection, internal test reports/certificates of each equipment/item shall be submitted. All tests shall conform to UL / FM /LPCB/ VDS/ N.F.P.A / IS 2189 approvals & standards. The material shall be dispatched only after issue of inspection or waiver certificate and after getting dispatch clearance.

1.7 EQUIPMENT/SYSTEM SPECIFICATION

1.7.01 MICROPROCESSOR BASED FIRE ALARM CONTROL PANEL (FACP): -

1.7.01.1 **Hot redundant Fire Alarm Control Panel** shall be intelligent, with its own Microprocessor based redundant CPU, redundant Power supply with battery back up, Memory, Communication, Loop cards, Control Modules, Alarm Modules, Interlocking/Interface

© 2022 MECON Limited All rights reserved

modules, Interface/Interlocking with AC/ Ventilation system/fire dampers/fire fighting local control panels etc.

CPU should be 100% HOT redundant . There shall be arrangement of Master and Slave CPU adjacent to each other so that Slave can take over instantly once Master is down. Redundancy should not be obtained vide separate Controller/Panels.

The FACP shall be provided with required numbers of Loop cards/modules. 20% spare loop cards/modules (at least one card/module) shall be left as spare for future use. Each loop of loop card/module shall be connected with maximum 170 numbers of detectors / devices. Further it shall be ensured that the loop card shall be loaded upto 70% of detectors/ devices keeping minimum of 30% spare provision.
Loop expandable up to 14 Loops (without additional PANEL Mainframe hardware).

Fire alarm control panel (FACP) shall facility to ignore false alarm and increase sensitivity to real fires from sensors.

The Fire alarm control panel shall have separate LED/LCP display area to indicate the address of each device and clear text about the location of alarm / trouble.

The Fire Alarm panel shall have be supplied with Personal Computer with 21inch LED monitor, A3/A4 size Colour printer, Key board, mouse for programming, engineering, monitoring, Graphics/mimic generation etc. The graphic work station shall form part of mimic.

The Fire Alarm system shall be supplied with BACnet interface card for integration with Central fire graphic station at Central Fire Station.

Also the Fire alarm panels shall be connected to the facility LAN point for feeding data to the Central Graphics Work station at the Central Fire Station (CFS). The necessary TCP/IP hard ware & software shall be built- in the panel. The Central Graphics Station shall be in the scope of a different package. The Fire Alarm panel shall be compatible to the Central Graphics station software.

Control panel shall have the following features:-

- Logging an alarm, time and action text on printers.
- Status check of disabled alarm addresses before they are restored.

© 2022 MECON Limited All rights reserved

- Storing of alarm and the possibility of internal organization of alarms.
- RS485 and NO/NC free programmable contacts.
- Keyswitch to prevent unauthorised operation of keypad.
- Integral sealed lead acid battery and charger, with Battery Back-up for 48 hours.
- Essential controls – Delay, panel reset, Audible alarm off, Disconnect master box, additional messages, verify/cancel fault buzzer. Fire, Pre-Alarm, Trouble, disconnection lamps. Each lamp shall also have appropriate indication (Releasing Systems activated, Master box, Delay, Verify, CPU failure, In operation normal condition & failure of power supply/battery) Simple menu driven function keys with password protection shall allow users to an extensive range of software based features.
- All control buttons and keyboard shall be enclosed behind a lockable cover, Up to 127 device capacity and a TTY/ RS 485 communication option.
- In case of fire, automatic fire warning and announcement provision shall be made in the PA system.

The fire control panels offered shall have high degree of flexibility with:

- The possibility of expanding to a bigger system with several control panels and control and information units.
- Programmable activation of control output relays for tripping ventilation system, AC system and closing of fire dampers in the event of fire.
- Individually controlled, monitored alarm outputs for external hooters, lamps etc.

Fire control panel shall have facility for test features.

© 2022 MECON Limited All rights reserved

The status check of each detector, interface units for alarm, prior warning, trouble, disabling shall be possible from control panel.

The control panel shall have memory storage for last events and an alarm counter for number of alarms occurred after the control panel is installed.

Fire alarm Panel shall communicate with Local control panel/control units of any fire fighting system control Panels like Gas flooding system, Water spar system, Manual call points etc. for integrated operation and monitoring of fire from one Central place. Fire alarm control panel shall be located in the Control room at suitable location.

The Power Supply to the control panel shall be 240 V, 50 Hz. Single phase, AC supply from UPS with battery backup.Battery backup shall be of 24 hours for normal operation and 15 mins for alarm condition, in case of power failure.

Indications / information received from detectors /field devices, switches etc to CPU shall be repeated to other panels/repeater panels as per requirement.

For reason of reliability and preventing inadvertent changes, system shall be maintained in non-volatile memory. System shall permit reprogramming by authorised personnel only.

1.7.01.2 SPECIFIC SYSTEM OPERATIONS:

Smoke Detector Sensitivity Adjust: Means shall be provided for adjusting the sensitivity of any or all intelligent addressable smoke detectors in the system from the system key pad with the programming software. Sensitivity range shall be within the allowed UL window. This allows for higher sensitivity at high fire risk area.

Alarm Verification: Each of the intelligent Addressable smoke detectors in the system may be independently selected and enabled to be an alarm verified detector. The alarm verification function shall be programmable and each detector shall be able to be selected for verification during the field programming of the system or any time after system turn – on. Alarm verification shall not require any additional hardware to be added to the control panel. The FACP shall keep a count of the number of times that each detector has entered the verification cycle. These counters may be displayed and reset by the proper operator commands. To eliminate generation of false alarms due to dust or cigarette smoke.

© 2022 MECON Limited All rights reserved

Point read: The system shall be able to display the following points status diagnostic functions without the need of peripheral equipment. Each point shall be annunciated for the parameters listed.

A: Device status
B: Device type
C: Custom Device Label
D: Software Zone Label
E: Device Zone Assignments
F: Analog Detector Sensitivity
G: All Program Parameters.

1.7.01.3 **System history Recording and reporting**: The fire alarm panel shall contain a history buffer that shall be capable of storing minimum 800 system output/input/control activations. Each of these activations, shall be stored and time and date stamped with the actual time of the activation, until an operator requests that the contents be displayed or printed. The contents of the history buffer may be manually reviewed, one event at a time, and the actual number of activations may be displayed and or printed.

The history of buffer shall use non-volatile memory. Systems that use volatile memory for history storage are not acceptable.

1.7.01.4 **Automatic Detector Maintenance Alert:** The fire alarm control panel shall automatically interrogate each intelligent addressable system detector and shall analyze the detector responses over a period of time.

1.7.02 REPEATER PANEL:

High-quality remote display and operating unit for Flexes FACP/ Equivalent. System operation is Interoperable and intuitive with a 5.7" TFT display. Individual access levels can be activated with a key code. Software addressing allows using the operating unit on the RS 485. It shall have all functions to reset silence and acknowledge Alarms.

1.7.03 ADDRESSABLE INTERFACE UNIT:-

© 2022 MECON Limited All rights reserved

The interface unit shall be suitable for connecting normally open type alarm initiating devices such as pressure switch, flow switches, level switches, potential free contacts etc. in the addressable loop, if required.

The interface unit shall be a sealed electronic unit with an address switch for individual address. It shall be housed in a metallic /high impact plastic enclosure and suitable for indoor / outdoor installation. The operation voltage shall be 24 V D.C.

1.7.03.1 ADDRESSABLE MONITOR MODULE

Monitor Module monitors are dry contact type fire or security initiating devices. It reports its unique address to the panel to pin point the exact alarm location.

Features:

Provides individual addressable input for fire alarm or security devices

Monitors either two or four wire (fault-tolerant) initiating device circuits. The monitor modules shall provides a two or four wire fault tolerant initiating circuit for normal open contact fire alarm devices and supervisory devices.

Provides full analog supervision of circuits.

The monitor module shall be assigned a point address.It's address and circuit status i.e normal, open, short are communicated to the control panel. An integral LED blinks each time the controller scans the module and LED latches in alarm condition by command from the controller.

1.7.03.2 Addressable Control Module:

The control devices shall form part of loop devices. Control module shall supervises and controls indicating devices and their associated wiring. The module shall also provide SPDT switching action for other locally powered equipment.

Features:

Provides addressable control to indicating devices

Controls and supervises two or four-wire (fault tolerant) indicating device circuits. Provides full supervision of circuits.

© 2022 MECON Limited All rights reserved

The module provides a supervised 2 wire or 4 wire fault tolerant output indicating circuits for audible devices, strobes and response to normal open circuit or short circuit condition of the circuit.

The module shall be assigned an address. When the controller commands the modules the internal relay energizes and switches externally supplied power to activate connected polarized indicating and other control devices. An integral LED shall blinks each time the controller scans the module and the LED latches in alarm condition by command from the controller.

Application:

For Controlling hooters, strobes, dampers or other switching device

1.7.03.3 FAULT ISOLATION MODULE

Fault Isolator Module shall be used on panel intelligent loop communication circuits along with other modules and sensors. It detect a wire-to-wire short and electrically isolates that condition from the circuit so that communication is maintained with unaffected devices on the same circuit.

Application:

The module enables part of an intelligent interface board communication circuit to continue operating when a short occurs on the circuit. If used in a two wire loop configuration, one module isolates a short to the part of the loop between the module and the intelligent interface board, allowing the rest of the loop to continue operating normally, the modules isolate a short or open to the part of the loop between them. In a star configuration a module can be used in each leg so a short on one leg does not affect communication on any other leg. An integral LED blinks to indicate normal status and is on to indicate a short in the loop.

1.7.04 GRAPHIC WORK STATION

The Local display units shall consists of latest generation Personal computer with minimum 8GB RAM, 1 TB hard disk, USB Ports of HP/DELL/LENEVO make. It shall be complete with 21inch LED monitor, key board, mouse, one number A3/A4 size colour printer and furnitures etc.

© 2022 MECON Limited All rights reserved

The display units shall be used for Graphics/MIMIC generation, data retrieval, alarm annunciation, commands and programming functions, report generation, printing etc.

The Graphic User Interface Software of fire alarm control system shall be a multi-location graphical control system (GEO MAP) which shall be used to monitor fire alarm systems from a central location. GEO MAP with 72" LED monitor shall be provided with superimposed Line Drawing of the building premises and location specific indication of fire on the GEO MAP to be provided.

All messages and states of attached fire alarm control panels shall be displayed using a clear graphical user interface. GUI shall be tested and approved in accordance with applicable Standard like ÖNORM F3003 (fire alarm control systems) or equivalent. Performance Characteristics of GUI:

- Single client security management system with visualization and editing of messages
- Separate client/server architecture with central update function
- Operating system-independent client functions.
- Mobile client (tablet or mobile phone) via Android; Mobile client one-man review
- Manageable data points: 30000
- Modular design with open system architecture
- Presentation of system status via graphics, text, table, Web or video view
- Independent driver concept (3rd party)- client-capable
- Individually configurable processes (workflow and script)
- Custom proprietary table model with unlimited custom configuration options
- Freely configurable client program interface
- Highly flexible data point management with free editing function (flags, tables, image)
- Uniform operation of a wide variety of manufacturer hardware

Groovy: State-of-the-art user interface for user-friendly workflow and script editing automatically at runtime

1.7.05 DETECTORS

All detectors shall be Intelligent, addressable type only and conform to Indian Standards.

1.7.05.1 HEAT DETECTORS:

Fixed temperature (static) elements: These shall be designed to operate when the temperature of detectors exceed a predetermined value.

© 2022 MECON Limited All rights reserved

Fixed temperature cum Rate of Rise temperature elements: The detectors are designed to operate within a given time:

a) When the rate of temperature rise at the detector exceeds a predetermined value regardless of the actual temperature; and
b) When temperature at the detector exceeds a pre-determined value.

The detectors shall be plug in type and shall have common base.

The detectors shall be provided with visual alarm LED which shall be clearly visible from outside by a flashing light in healthy working condition.

The detectors shall have provision for connecting repeat response indicator.

The detector shall be suitable for 24V D.C operation.

1.7.05.2 SMOKE DETECTORS:

These shall be operated by detecting the scattering or absorption of light by smoke particles.

The detectors shall be plug in type and shall have common base.

The detectors shall be provided with visual alarm LED which shall be clearly visible from outside by a flashing light in healthy working condition.

The detectors shall have provision for connecting repeat response indicator.

The detector shall be suitable for 24V D.C operation.

1.7.05.3 MULTI CRITERIA DETECTOR :

Detector shall be multi criteria combination of rate of rise heat detector & photo electric smoke detector.

The detectors shall be plug in type and shall have common base.

The detectors shall be provided with visual alarm LED which shall be clearly visible from outside by a flashing light in healthy working condition.

© 2022 MECON Limited All rights reserved

The detectors shall have provision for connecting repeat response indicator.

The detector shall be suitable for 24V D.C operation.

1.7.05.4 **Linear Heat Sensing Cables (LHS)-**LHSCable shall be either digital/analogue type conforming to Indian standards**.** These shall be used in trays of cable tunnels/ cable galleries.

1.7.05.5 **Flame detector &other Detectors – shall be supplied as per requirement conforming to Indian Standards.**

1.7.05.6 **VESDA Systems** are aspirating smoke detection used for early warning applications where response to a fire is critical. **VESDA** works by continually drawing air into the pipe network via a high efficiency aspirator. A sample of this air is then passed through a dual stage filter.

1.7.06 MANUAL CALL POINTS (MCP), ADDRESSABLE TYPE

- All MCPs shall be Intelligent, addressable type only.
- MCP's shall be Manually operated device used to initiate an alarm signal.
- Usage of MCP shall be as per IS-2189-1988. All devices shall be totally enclosed in the box.
- Manual pull stations are installed near exit / entrance doors, stair cases or outdoor locations where automatic fire detectors cannot be installed.

1.7.07 FIRE EXIT BOARD

Self illuminous "FIRE EXIT" sign boards shall be provided indicating escape routes to escape under fire condition. The type of sign board shall be as per site condition.

1.7.08 RESPONSE INDICATOR

The response indicator shall comprise of indicator lamp with flashing enclosed in a plastic cover and engraved "FIRE" on the plastic cover.

1.7.09 ALARM SIRENS, HOOTERS

© 2022 MECON Limited All rights reserved

All protected premises/zones/areas shall be provided with required numbers of hooters to alert/warn working personnel present. Numbers of hooters shall be decided considering partition, audible range etc. The hooters shall be connected with loop circuit as per class A wiring. The hooter shall produce different sound in case of any alarm and different sound in case of confirmed fire.

In addition to hooter at each room/zone, suitable numbers of Sirens shall be provided. The siren shall be located outside the protected building for ease of identification of building. At least one siren shall be provided for each building. One Siren common for all buildings shall be located at central control room where fire alarm control panel is located for raising common alarm. Different tones shall be provided with siren in case of alarm and fire.

The sirens shall be of rugged construction, have weather proof protection and suitable for outdoor mounting. It shall have adequate range to cover a radius upto 1-3 K.M and shall be dual tone. One siren shall be provided with security gate, if any, for raising siren in case of fire.

The siren shall be suitable for 240 V +/-10%, 50 Hz +/-2Hz single phase A.C. Frequency shall be as per standards. The siren shall have rain canopy. The siren shall have IP-65 enclosure.

Hooters

The hooter being located at vital places shall have minimum audible level of 65 dB OR 5 dB above noise level of the working area. The hooter shall be loop powered.

1.7.10 POWER SUPPLY, CABLING AND WIRING

1.7.10.1 POWER SUPPLY:

The power to the FACP, Graphic work station, Printer, Monitors etc. shall be 240V AC from UPS with battery back up of 24 hours normal operation 15 mins for alarm condition, in case of power failure. The power to the Deluge valve actuation system shall be derived either from fire alarm panel (24VDC) or shall be locally generated in the field from supervised Battery and Charger system.

1.7.10.2 CABLING AND WIRING

© 2022 MECON Limited All rights reserved

Wiring of detectors, MCPs, Hooters etc. shall be conforming class A wiring as per Indian standard.

Wiring shall be carried out as per following guidelines:-

a) All Electrical panel rooms, HT & LT Substation buildings, MCC/MLDB/PDB rooms, HT & LT Transformer rooms, Capacitor bank/reactor rooms, Battery rooms, Cable cellars, Cable basements, Cable floors, Cable shafts etc. shall have Unarmored FRLS cables through GI/PVC rigid conduits clamped on wall/ceiling.

b) Control rooms, Control pulpits/cabins, UPS rooms, PLC rooms, RIO rooms, Level-1/2 Automation rooms, Computer rooms, Telephone exchange rooms, Office rooms, Conference rooms, Administrative building rooms, Management building rooms, Library, Laboratory rooms, Energy Management Centers etc. – Considering aesthetics of these rooms/premises, all wiring shall be concealed in nature using Unarmoured FRLS cables through GI/PVC rigid conduits either above false ceiling or inside walls/roofs etc.

c) Cable tunnels, Hydraulic rooms/Oil cellars, other shop floors etc. - Unarmoured FRLS cables through GI/PVC rigid conduits or armoured FRLS cables through clamped on wall/roof etc.

d) Cables buried -Unarmoured FRLS cables through GI conduits or armoured FRLS cables

e) Cables exit from one building to other - Unarmoured FRLS cables through GI rigid conduits or armoured FRLS cables.

f) GI/PVC flexible shall be used wherever necessary from conduit to detectors/MCPs/Hooter, at bending points to avoid exposure of cable.

Following General Requirements on cables shall be followed:

a) The equipment and cables of FDA system shall be independent of any other system and cables and shall not be shared with any other system.

b) Cables connected to detectors shall be given ‘S’ loop on both sides of the detectors which shall be properly clamped to the ceiling.

c) ‘S’ loop shall also be left where cables connect sounders, panels, dampers, etc,

Appropriate glands shall be provided for the armoured cable near terminals of junction box.

d) Unused cable holes if any should be plugged.

© 2022 MECON Limited All rights reserved

e) All the cables and wires shall be tagged for proper identification. Wires shall be identified by ferrules at junction and cables by colour bands at every 3 M distance.

f) Over-head lines for fire alarm system shall not be used when connecting different building. They shall be laid under ground according to IS: 1255-1983.

g) The cables and wiring for fire Alarm circuit shall distinct and separate and shall not be clubbed with other cables of plant and FDA system wiring must be laid well away from other cables of plant.

1.7.11 CABLES: -

For detector wiring - Annealed tinned stranded copper conductor of minimum 1.5 sq. mm, PVC insulated & PVC sheathed, FRLS conforming to IS 1554.

The cables required for detectors connection, power supply etc. shall be multi core, (2 core, 3 core, 4 core), stranded copper conductor as per IS-1554, IS – 8130 & IS - 5831. The cable shall be Fire Resistant Low Smoke (FRLS)

All cables shall be 1100 Volt grade.

However, if any special cables are required for detector cabling etc, the tenderer shall supply the same.

2.0 IP BASED PUBLIC ADDRESS SYSTEM

2.1 GENERAL

This General Technical Specification (GTS) covers the technical requirement of IP based Loudspeaker talk back system.

IP based loudspeaker talk back system shall be provided for facilitating reliable two-way intercommunication between various strategic points of the plant complex. The subscriber stations shall be provided at locations having very high ambient noise level.

The system shall have requisite number of subscribers provided in various units of the plant complex for smooth flow of information between process points as per operational and process requirement.

© 2022 MECON Limited All rights reserved

Numbers of Field stations shall be as indicated in respective shop Technical specification.

The Servers, Master control station, PC, Printers shall be suitably installed in the Control room. Each control room shall be provided with minimum 1 number indoor station.

The intent of the specification is to define the functional & design requirements for the IP based Public address system. The scope of tenderer shall include selection, design, engineering, manufacturing, testing at manufacturer's works/ site, erection, installation, testing and commissioning of public Address system meeting the intent and functional requirement of specification.

The scope shall also include all required items e.g. erection hardware, sacks, cables, cable trays, conduits, etc. as required, for the proper installation (conforming to IS: 1881, IS:1882) to make the IP based PA system complete and functional in all respects.

2.2 SYSTEM FEATURES

The equipment furnished under this section shall meet the requirement of all applicable codes and standards as applicable.

The system shall be adequately protected from signed and power line noise and meet the Surge Withstand Capability (SWC) requirements of ANSI C37.90 A/IEEE standard 472-1989 or equivalent. Equipment shall be self- protecting against transients in the input AC supply.

2.3 POWER SUPPLY ARRANGEMENT

The PA system along with all its system components i.e. network switches, servers, media converters, PC stations etc. shall be powered from UPS system. Required power distribution shall be designedbythe tender and supply of same shall be in the scope of tenderer.

For call stations & amplifiers, mini UPS of suitable rating are in the scope of tenderer. Tenderer shall also consider local power distribution boxes as required for sub-distribution of supply from mini-UPS to call stations & amplifiers. The location of mini-UPS & power distribution scheme shall be finalized during detail engineering. UPS power supply from Plant main UPS can be used, if available. In such case, mini-UPS need not be supplied.

© 2022 MECON Limited All rights reserved

2.4 SYSTEM DESCRIPTION & DESIGN AND TECHNICAL REQUIREMENT

The PA system shall be designed as standalone IP based network architecture. The system shall be based on centralized control together with distributed nodes permitting speech broadcasts and pre-recorded messages/ alarm tones etc. The complete system is divided into zones as per process and plant requirement. The PA system shall be designed such that no single failure shall disrupt the availability of complete system. The network switches in PA system shall be connected employing ring topology. Redundant servers shall be provided tocater to all zones of the plant. These shall be interconnected through redundant OFC based network.

The Carrier system shall be based on Voice Over IP, extended to provide IP communication across the complete PA system. The call stations and standalone amplifiers shall be individually IP addressable. Any conversion of the analog field call station to IP mode by separate attachment of the intelligent module/ unit shall not be acceptable. Each call station should be able to selectively call another call station without manual intervention of any other equipment. The design shall be such as to provide highly intelligible full duplex voice communication even in areas of high background noise (up to 110db).

2.5 PA SYSTEM MANAGEMENT SOFTWARE

Configuration of the system shall be achieved by user Friendly GUI based software for maximum flexibility, easy re-configuration, maintenance & future expansion. This software should be configured on each PC station, which enables an operator to implement speed commissioning and also carry out routine diagnostic cheeks / fault finding functions of PA system components. It should be possible to make adjustments when the system is installed without resulting in modification to the system wiring. It shall be possible to download / store the configuration parameters & scheme from the server without taking the system out of service. Levels of system access and privileges shall be maintained through security passwords etc. The software shall be able to work with the latest windows version. All software utilized shall be latest and upgraded version.

2.6 BUILT IN DIAGNOSTIC FEATURES

The Bidder shall provide all hardware / software in order to have a comprehensive built in diagnostic test feature covering the complete PA system components including call

© 2022 MECON Limited All rights reserved

stations & amplifiers, standalone amplifiers along with associated loudspeakers, servers, network components i.e. network switches and interconnecting cables, power supplies etc. so that at all times, the status of the complete system can be monitored . Active fault reporting concerning all aspects of PA system shall be extended to PC Stations which shall record the system malfunction messages with time & date stamp.

Recording functionally for calls to and from master call station in each zone shall be provided. System shall ensure that once recorded, audio cannot be altered.

2.7 COMMUNICATION WITHIN A ZONE

The PA system shall allow party calls i.e. between one call station to another and also Group/ conference calls i.e. simultaneous conversation amongst multiple call station. Party calls and group/ conference calls shall be in full duplex mode.

Each call station shall be able to broadcast a message to all the associated call stations or selected call stations in a zone. The priority of call mode or broadcast mode or Emergency priority settings shall be configurable for each call station.

Portable type call stations with network compatible ports shall be used at certain location where operational personnel are not present normally. Necessary network connection, power supplies etc. shall be provided at these locations. The locations (distributed across different zones) shall be finalized during detailed engineering.

Unless requested, announcements / communication within a zone shall not be audible in other zones.

2.8 INTER ZONE COMMUNICATION

One indoor desktop mounted call station in each zone shall be Master Control Unit. Any inter zone communication shall be possible through this master control unit.

The communication facilities (including broadcast) amongst call stations of different zones shall be such as if any have now become a single zone.

Multiple group or individual calls shall be possible at the same time across multiple zones without interfering with each other.

© 2022 MECON Limited All rights reserved

2.9 CALL STATION

Call stations shall be of the following types:

a. Outdoor Wall/ column mounting type (Type-A)
b. Indoor desk-top mounting type (Type-B)

Each Call station shall have LCD indicator, 10 digit dial pad & 2 special keys, Pre-amplifier & power amplifier, indication for 'Power Supply On' and 'network Connection Healthy' as a minimum.

The outdoor wall/ column mounting type call station shall be dust-tight and weather proof, with appropriate protection against direct rain, ingress of dust and moisture conforming to IP-65 degree of protection as per IS/IEC:60947-1. Outdoor wall / column mounting type. The indoor desk-top mounting type call station shall have a degree of protection of at least IP-32. All call stations and their components shall be capable of continued satisfactory operation at an ambient temperature at 55 Deg.C

The indoor desk-top mounting type call station shall be suitable for flush mounting on control desk suitable accessories for the same shall be in the scope of Tenderer.

Call stations transmitter / microphone shall be dynamic noise cancelling type and anti-side tone control facility shall be inbuilt.

All call stations shall have a compact, robust, rust resistant, shock resistant body made of high impact polycarbonate/ Stainless Steel or equivalent. The outdoor call station shall be inside an enclosure with transparent glass door which can be opened through number padlock only.

The wall / column mounting call stations shall be tamper-proof.

The call stations in the noisy areas shall be housed in Acoustic hoods. An industrial type free standing, floor mounting hood shall be used for providing to above requirement. The design noise level within the hood shall be limited to a maximum of 60dB SIL.

The indoor desk mounting type call station shall preferably be PoE powered and the same shall be IEEE802 compliant.

© 2022 MECON Limited All rights reserved

2.10 AMPLIFIERS

Amplifiers shall be solid state class-D push-pull type, in built with the call station fully conforming to IS: 10426 or equivalent international standard.

Amplifier shall have 0-100% volume control facility for coarse and fine setting, input sensitivity control, Receiver volume control, bass cut filter and Anti-side tone control feature.

Standalone Amplifier

Amplifiers of suitable rating shall be provided for general announcement. Multiple loudspeakers spread across a zone shall be used along with a standalone amplifier. This amplifier shall be IP based and monitoring of the associated loudspeakers shall be provided.

2.11 LOUDSPEAKERS

Indoor loudspeaker shall be cone type housed in sturdy metal cabinet suitable for wall / column mounting. The mounting bracket shall be treated with acoustic under-coats to prevent resonance. They shall have IP-52 degree of protection as per IS/ IEC: 60947-1.

Outdoor loudspeaker shall be industrial horn type and of pressure die cast aluminum or equivalent industrial grade material construction. The mounting bracket shall be with adjustable base suitable for vertical and horizontal orientation They shall have IP-65 degree of protection as per IS/IEC:60947-1.

2.12 SERVER

Redundant Servers shall be supplied. The server shall be based on state of art VOIP technology. The server should support protocols including SIP or equivalent, TCP, IPV4 / IPV6, Codec G722, SNMP, RTP, NTP etc. Suitable built in IP security such a firewall, SSH, HTTPS etc. shall be provided in server. The server should be able to support the required number of call stations with future provision. Required software licenses to be provided accordingly.

© 2022 MECON Limited All rights reserved

The server shall be capable of self-recovery in case of any fault / network break down. It shall be rack mounted type.

The server shall be able support minimum 4 channels for GSM communication with PA system . Suitable interface for the same shall be considered by the Tenderer.

All programming tools & software that are required to program / reprogram the system shall also be provided along with the server.

2.13 MASTER CONTROL UNIT

The Master Control Unit shall facilitate inter zone communication amongst different zones. It shall have minimum 40 direct access keys with LED indication, which shall be configured as per requirement, a goose neck type Microphone and a hand receiver unit attached to it. Emergency announcement facility like fire alarms etc. shall be done from Master control unit automatically.

2.14 NETWORK SWITCH

All the network switches shall be of high quality &managed type and shall be sized to meet the functional requirement as specified. The location of network switches shall be decided during detail engineering and shall be subject to approval of purchaser/consultant.

2.15 PC STATION

PC station shall be provided for overall viewing and monitoring of PA system functionality in plant area. It shall be provided with PA system management.

2.16 CABLES AND JUNCTION BOXES

The successful tenderer shall supply the all required cables for PA system. All cables of PA system shall be armoured, if unarmored, the same shall necessarily be laid in GI conduits.

Cable shall be FRLS PVC sheathed cables for use in PA system and shall conform to latest edition of Indian standards.

Fiber optic cables are to be provided as per requirement.

© 2022 MECON Limited All rights reserved

Twisted multipart, multistoried with at least one spare pair, minimum 0.5 mm2 cross section, annealed copper (shielded and armoured) shall be provided for loud speakers

2.17 TECHNICAL PARTICULARS

Public address systems shall conform to the following technical parameters.

	Items	Technical Particulars
I)	Amplifiers	
	a) Band width (+- 3 db)	100- 10000 Hz
	b) THD	<1 % at 1 KHz at rated output
	c) Signal to Noise Ratio	Min. 60dB
II)	Microphones	
	a) Band width (+- db)	Codec G. 722,200-7000 Hz
	b) Type	Omni directional & Dynamic noise cancelling type
III)	a) Outdoor	: Wall/column mounted Horn type
	Capacity	: 105 dB for broadcast, 10 W (RMS)
	b) Indoor	: Wall/ column mounted Cane Type
	Capacity	: 85dB, 2.5W (RMS)

© 2022 MECON Limited All rights reserved

3.0 IP BASED CCVM SYSTEM

3.1 GENERAL

The Closed Circuit Video Monitoring (CCVM) system shall be intended for comprehensive round the clock surveillance for control and supervision of technological processes at points which are difficult to be observed directly or which require monitoring from a Remote Control room by operational people.

The location and numbers of CCVM equipment shall be as per respective package TS.

The system consists of IP cameras (CCD/CMOS type) with fixed/zoom lens, minimum 21" HD colour monitors, water cooling jackets, blower units, wiper & washer unit of the weather proof housings, remote controlled Pan & Tilt units, Receiver Driver units, Network Video recorders, Video management softwares, Networking switches and components, Camera mounting platforms/structures, PC console with control units for complete control of the cameras, Inter connecting Ethernet cables, OFC cables and all other auxiliary equipments, connectors and erection accessories etc. as required for completeness of the system.

3.2 SYSTEM REQUIREMENTS

The cameras will be of Charge Coupled Device (CCD) type / Complementary metal–oxide–semiconductor (CMOS) type and these shall be mounted in such a manner so as to provide continuous monitoring of the critical processes / operation of the shop floor as required.

The system shall provide clear and sharp picture on monitors in industrial lighting conditions at any point of time of day or night.

The complete CCVM Systems shall work on 240 V single phase AC supply which shall be arranged through UPS power supply. In case, any other voltage required for the CCVM system, same shall be arranged by the supplier from the above available source. The CCVM system shall be provided with uninterrupted power supply system for feeding stabilized and continuous power supply to all equipment.

© 2022 MECON Limited All rights reserved

The Control rooms of the shop shall have Control units installed which will perform all control functions related to the CCVM Systems comprising of IP Cameras, Colour Monitors, Water cooling jacket, blower unit and wiper & washer unit of the weatherproof housing etc.

All the CCVM Cameras shall be connected to NVR through the corresponding Network switches for central monitoring of videos.

3.3 EQUIPMENT DETAILS

The CCVM. system will comprise of the following.

- IP color cameras (Fixed / PTZ type).
- Remote controlled Pan & Tilt units, as required.
- Network video recorders or Servers
- PC consoles
- Large video monitors
- Interconnecting Ethernet cable, OFC cable and power cables
- Camera mounting platforms / structures.
- Water cooling jackets, complete with wiper and washer units, compressed air arrangement as per requirement
- All other auxiliary equipments, connectors, erection accessories etc. as required.

3.3.1 IP CCVM CAMERA

The camera shall be of minimum following specification

3.3.1.1 OUTDOOR PTZ DOME TYPE CAMERA

1	Image Sensor	1/3” CMOS/MOS , WDR for Day & Night with Colour or B/W output
2	Resolution	Full HD (1920 x 1080) @25 fps or better
3	Iris	Auto iris
4	Minimum Illumination	Colour 0.2 lux, 0.02 lux at B/W mode or better. IR with100m range or better

© 2022 MECON Limited All rights reserved

6	White Balance	Auto /Manual
7	Wide Dynamic Range	True WDR 120 db or better
8	Signal to noise ratio	≥ 50 db.
9	Automatic gain control	Yes
10	Video Compression	H.264/H.265 or better
11	Video Output	RJ-45
12	Configuration	Through web Access and Video Management Software/NVR
13	Pan movement	360° endless
14	Tilt Range	+/- 0-90°
15	Pre-set	Min 64 positions
16	Network Protocols	IPv4 & IPv6 , TCP/IP , UDP, IGMP(Multicast)DHCP Client, HTTP, HTTPs
18	Features	Face Detection, Motion Detection Video Motion detection -Integrated & Selectable Automatic White Balance with manual override Digital Wide Dynamic Range Backlight compensation -Integrated & Selectable Color, brightness, contrast adjustment -Integrated & Selectable Mirror/Flip, Privacy Masks, Text, Date-Time overlay-Integrated & Selectable
19	Power supply	PoE 802.3 af and also supports local power supply
21	Operating Environmental Conditions	The camera shall be able to operate satisfactorily in the following conditions: (a)Operating Temperature range of 0^0C to 50^0C (b)Relative Humidity up to 90% (Non –Condensing)
22	Alarm	Minimum 2 input ,1 output or higher
23	Build in Memory support	Minimum 128 GB Memory card (provided with camera) for automatic recording when network fails
24	Ingress Protection	IP66, Vandal proof
25	Surge Protection	To be provided as per BS6651
26	Interface	ONVIF profile S &G
27	Certification / Approvals	UL, FCC, CE

© 2022 MECON Limited All rights reserved

3.3.1.2 OUTDOOR BOX CAMERA WITH VARIABLE FOCAL LENS

1	Image Sensor	1/3” or better CMOS/MOS , WDR for Day & Night with Colour or B/W output
2	Resolution	Full HD (1920 x 1080) @ 25 fps or better
3	Iris	Auto Iris lens
4	Minimum Illumination	Colour 0.2 lux, 0.02 lux at B/W mode. IR 60 m range or better.
5	Lens	Full HD 2.7 mm to13 mm, Vari-Focal, IR corrected and motorized zoom with auto focus.
6	Scanning	Progressive.
7	White Balance	Auto
8	Wide Dynamic Range	120 db. or better
9	Signal to noise ratio	≥ 50 db.
10	Automatic gain control	Yes
11	Video Compression	H.264/H.265 or better,
12	Video Output	RJ-45
13	Configuration	Through web access / Video Management Software
14	Protocols	IPv4 & IPv6, TCP/IP , UDP, IGMP(Multicast)DHCP Client, HTTP, HTTPs
15	Protection	OEM make camera housing Min IP 66 & IK 10, Surge & lightening protection (inbuilt or external)
16	Power supply	UL listed External Power Supply with weather proof enclose &PoE support
17	Operating Voltage	Voltage 230 V AC supply available at Rig, suitable power adapter / power supply to be provided accordingly.
18	Intelligent Feature	Face Detection, Motion Detection ,Line crossing, Enter/ Intrusion detection
19	Operating Environmental Conditions	The camera shall be able to operate satisfactorily in the following conditions (a)Operating Temperature range of 0^0 C to 50^0C (b)Relative Humidity up to 90% (Non –Condensing)
20	Alarm	Minimum 2 input ,1 output
21	Build in Memory support	Minimum 128 GB Memory card (provided with camera) for automatic recording when network fails

© 2022 MECON Limited All rights reserved

22	Ingress Protection	IP66, Vandal proof
23	Surge protection	To be provided as per BS6651
24	Certification / Approvals	UL, CE, FCC & ONVIF profile S &G

3.3.1.3 INDOOR FIXED DOME CAMERA

1	Image Sensor	1/3" or better CMOS/MOS , WDR for Day & Night with Colour or B/W output
2	Resolution	Full HD (1920 x 1080) @ 25 fps or better
3	Iris	Auto Iris lens
4	Minimum Illumination	Colour 0.2 lux, 0.02 lux at B/W mode. IR 30 m range or better.
5	Lens	Full HD 2.7 mm to13 mm, Fixed-Focal, IR corrected and motorized zoom with auto focus.
6	Scanning	Progressive.
7	White Balance	Auto
8	Wide Dynamic Range	120 db. or better
9	Signal to noise ratio	≥ 50 db.
10	Automatic gain control	Yes
11	Video Compression	H.264/H.265 or better,
12	Video Output	RJ-45
13	Configuration	Through web access / Video Management Software
14	Protocols	IPv4 & IPv6, TCP/IP , UDP, IGMP(Multicast)DHCP Client, HTTP, HTTPs
15	Protection	OEM make camera housing Min IP 66 & IK 10, Surge & lightening protection (inbuilt or external)
16	Power supply	UL listed External Power Supply with weather proof enclose &PoE support
17	Operating Voltage	Voltage 230 V AC supply available at Rig, suitable power adapter / power supply to be provided accordingly.
18	Intelligent Feature	Face Detection, Motion Detection ,Line crossing, Enter/ Intrusion detection
19	Operating Environmental Conditions	The camera shall be able to operate satisfactorily in the following conditions (a)Operating Temperature range of 0^0 C to 50^0C (b)Relative Humidity up to 90% (Non –Condensing)

© 2022 MECON Limited All rights reserved

20	Alarm	Minimum 2 input ,1 output
21	Build in Memory support	Minimum 128 GB Memory card (provided with camera) for automatic recording when network fails
22	Ingress Protection	IP66, Vandal proof
23	Surge protection	To be provided as per BS6651
24	Certification / Approvals	UL, CE, FCC & ONVIF profile S &G

3.3.2 CAMERA MOUNTING PLATFORM:

The camera mounting platform will be suitable for mounting the camera assembly on walls / column / structures as per the actual requirements at site and keeping in view the area to be covered by the individual camera. The mounting will be with adjustable support so as to have flexibility to move the camera assembly as and when required. Wherever necessary, structures / vertical poles to mount the cameras shall be fabricated and supplied by tenderer.

3.3.3 CAMERA HOUSING

The outdoor camera housing should be weather proof with IP class as mentioned in datasheet of camera.

3.3.3.1 WATER COOLING JACKET FOR THE CAMERA

At the locations where the ambient temperature is high i.e more than **55 deg C**, the protective camera housings will be provided with water cooling jacket to protect the camera against high temperature. Cooling water will be supplied to the jacket continuously to cool the camera and keep it fully efficient & operational.

Double walled stainless steel housing will be provided for protection of cameras from high temperature. Back cover of the water cooled housing will be detachable so that the camera can be taken out/installed from the rear for service and inspection. Piping for cooling water and purging air must be suitably protected against high ambient temperature/ radiation heat. The glass panes of the housing will be resistant to influences like quick changes in radiation temperatures.

The cooling jacket will have temperature sensorto monitor the temperature of the camera, a toughened glass front, filter & an annunciator. Whenever the camera temperature

© 2022 MECON Limited All rights reserved

crosses the upper threshold limit of the desired temperature there will be audio visual indication in the control room for the attention of operator.

Compressed air and a wiper & washer unit will be installed with the water cooling jacket to keep the front glass of the cooling jacket clean from dust & dirt.

The housing will have enclosure as per IP 65.

3.3.3.2 PAN AND TILT UNIT

The pan and tilt unit will comprise of pan & tilt head and control unit. The pan and tilt head will be remotely controlled from the control unit.

The pan & tilt head will be heavy/ medium duty type, rugged in construction and smooth in operation. The unit shall be able to cater the load of weather proof housing with water cooling jacket, wiper & washer unit and compressed air pipe line arrangement. The unit will be used to cover large area of interest for surveillance in different directions, as required by the operator.

The unit will be suitable for mounting on walls / column / structures / hanging from ceiling as per the site requirements. The unit will have complete freedom of movement throughout the entire pan & tilt scan. The unit will be completely sealed for all weather proof use.

The pan and tilt units will be designed so as to ensure long operational life. The units will employ electric motors with quick reversibility and dynamic braking characteristics, have rugged worm gears assembly to minimize backlash and ensure drift free operation. It will be possible with ease to reposition the cameras field of view at any time. The unit will have manual over ride on the auto mode to enable the operator to choose the area of scan as and when required.

The Pan &Tilt unit shall withstand the temperature indicated for the corresponding area of shop.

3.3.4 SERVERS/NVR, CCVM VIEWING STATION AND SWITCHES

Server/NVR, Monitors, Switches shall be kept inside the nearest control room. Enclosures with ventilation fans shall be included for server/NVR and switches.

© 2022 MECON Limited All rights reserved

3.3.4.1 SERVERS /NETWORK VIDEO RECORDER HARDWARE & SOFTWARE

Network video recorder shall receive live video data from all camera sources, store live video in the storage hard disk, playback and control. NVR shall be ONVIF complaint.

Servers/NVR shall be suitable to meet this specification. The hard disk shall be of size to meet the requirement of minimum 64 cameras at minimum 25fps and D1 resolution, for round the clock surveillance for 30 days.Server/ NVR sizing shall be decided during detail engineering. Servers/NVR should be designed such that the hard disk space is maximum 60% loaded. The Server/NVR shall have space and provision for addition of hard disks for 64 more cameras in future.

Data saving in compressed format in DVD's and facility of retrieving it shall be made possible. The server/ NVR shall have this facility.

The Server/ NVR shall be of state of art and of latest technology. Server/NVR shall have IP connectivity for Building management system (BMS) in future.

Minimum One No.65" monitor for viewing and monitoring of videos shall be provided.

A suggestive specification of server & NVR is given below. However, actual shall be as to meet the requirement mentioned in this specification.

3.3.4.1.1 SERVER

The specification of server shall be latest at the time of supply

Server shall be modular rack mounted (Resultant speed 2.8GhZ minimum), Intel Xeon processor or better

Shall have 4MB Cache memory minimum, minimum 8GB RAM memory with provision to expand upto minimum 16 GB.

Shall have minimum 1 parallel port and 4 USB ports and dual gigabit network interface (Ethernet)

Shall have HDD to meet the requirement of this specification

© 2022 MECON Limited All rights reserved

Shall have CD & DVD Reader / Writer with windows preloaded. This includes licenses also.

Shall have 22" TFT colour monitor with keyboard and mouse.

3.3.4.1.2 NETWORK VIDEO RECORDER (NVR)

Sr. No	Feature	Parameters
1	Main Processor	Intel Core i7 or Better
2	Operating system	Windows 10 / LINUX or latest
3	Database	Microsoft SQL Embedded Server latest edition
4	IP Cameras supported	Minimum 16/32/64 channel or higher with pre-license
5	Hard Disk	Required TB SATA HDD slots with future expandability for the storage of min 30 days recording
6	Network	2 x Gigabit Ethernet (RJ-45)
7	Functions	Live View, Recording, Play back, Backup
8	License	Minimum 16/32/64 IP Channels video channels & License for user clients with monitoring and control of Camera along with VMS software
9	Support	Privacy masking, Camera title, Motion detection, time function, recording, Video loss, Camera lock, alarm, Scheduling
10	Control mode	USB Mouse, Keyboard, Network
11	Encoding/Compression	H.264/H.265,MJPEG, MJPEG-4
12	Camera resolution supported	5 MP ; 4 MP,1 3 MP ,1080p ,720p; D1; CIF or better
13	Display	1 VGA, 1 HDMI, Display port
14	USB port	Min 2 Nos. USB 2.0 port and 2 Nos. USB 3.0 port
15	Monitor	32 inch LED Monitor
16	Input Voltage	100-240 VAC, 50 Hz
17	Cabinet	Rack / desk-mountable chassis
18	Operating Temperature	10° to 35° C
19	Operating Relative Humidity	10% to 85% non-condensing

© 2022 MECON Limited All rights reserved

20	Compliance	ONVIF (to support third-party network cameras)
21	Regulatory compliance	UL, FCC, CE

The server/NVR shall contain database of all network connected cameras and their configuration. This shall manage the system database comprising of:

- System configuration
- Camera configurations and setting
- Recording configurations and setting
- Configuration of quad views and settings
- Details of recordings
- Schedules
- Operating security details
- Configuration of surveillance and alarm monitors
- Configuration of video motion detection
- Communication between cameras and camera server
- Allow alarm/events in security system to initiate recordings
- Report camera failures
- Full audit log all system equipments.

This must be capable of supporting a large amount of disk space for online video storage and access to high capacity archiving mechanisms, for removal of stored video to offline media and vice versa.

The server/NVR shall:

- Manage live videos from cameras
- Transmit live video to operator station
- Receive camera control command from operator station and then send to cameras
- Store live video in hard disk
- Transmit previously stored video to operator station
- Archive and retrieve previously stored video to/from offline media
- Provide video motion detection
- Export the recordings to MPEG format so that it can be viewed using standard tools.

© 2022 MECON Limited All rights reserved

3.3.4.1.3 SOFTWARE FUNCTION

All related software, as required to meet the specification shall be preloaded and shall be of licensed version.

The software should be capable of viewing the video of IP cameras installed at various locations, recording and storing of the same in database.

Features
The software shall be loaded at server level. The windows based software should have the following functionalities 1. Network Video Recording module 2. Database manager 3. Record & manage IP cameras. 4. Scheduling, continuous and motion detection recording support. 5. Time search, date search, fast and slow speed playback support.
The architecture should be on a server-client based system
The software should be capable of working in Microsoft windows operating system.
The Software should be on Open Architecture Platform and should be compatible with multiple makes of cameras and encoders.
The Software should comply to the Standards completely (viewing, recording, management, Controlling, PTZ).
Clients should be web based. If its application based, then tenderer should provide user licenses for min. 4 users. (To be included in software cost itself)
For each camera set up bit rate, frame rate, and resolution shall be set independent of other cameras in the system. Altering the setting of one shall not affect the settings of other cameras.
Video Search: The software should allow search based on time, date, and day.
Time shall be GPS based preferably and recording shall be done with time stamping.

3.3.5 CCVM Viewing Stations / Monitors

The CCVM monitors shall be require number of PCs and with minimum **32**" Colour LEDscreen of latest configuration having necessary controls.

© 2022 MECON Limited All rights reserved

Minimum 1 n .72inch LED Screen display (24x7 operation) shall be provided for viewing and monitoring of cameras or required numbers of 32" LED Monitors, ie. each monitor for viewing maximum of 4 cameras.

Joystick for controlling cameras

All related software, as required to meet the specification shall be preloaded and shall be licensed copy.

This shall be suitable for continuous operation (24x7)

The CCVM monitors will be suitable for indoor applications and compatible for the cameras. These will be of fully solid state type, modular in design, have low radiation and provide a bright, clear, well defined and high resolution picture display on the Screen. The PC's shall be compatible with Client software of NVR.

The monitor will be designed to produce high resolution of minimum 1280x1024 pixels.

3.3.6 Network Switches

All the cameras and NVR/ Server shall be connected to the L2+ managed switch with minimum of 16/24/48 Nos 10/100/1000 Mbps copper port along with additional two Nos. of one Gigabit SFP based ports & SFP modules. All the network switches shall be of high quality & latest model and shall be sized to meet the functional requirement as specified. The location of network switches shall be decided during detail engineering and shall be subject to approval of purchaser/consultant

3.3.7 Network Rack

Network Rack of suitable size to place the NVR, network switch and patch panel shall be provided. The rack shall be of wall mount/ floor mount type and provided with required power sockets, cooling fan, cable manager and mounting frames.

The rack shall be made from steel sheet of 1.6mm thick and powder coated. Front shall be glass door with lock and key. Legend plates, cable entries and earthing shall be provided.

3.3.8 CABLES

© 2022 MECON Limited All rights reserved

3.3.8.1 POWER SUPPLY CABLE:

The specifications shall be as under:

No of cores	--	3 (Three)
Conductor size	--	min 2.5 sq mm, 7/0.68 multi strand with standard annealed electrolytic copper conductor.
Primary insulation	--	PVC insulated of 85º C PVC as IS-5831Type C
Thickness of PVC insulation	--	0.8 mm
Color code	--	Red, Black and Green
Inner and Outer Jacket	--	Extruded Flame retardant and 90º C PVC to IS 5831- Type ST2
Armouring	--	Galvanized Steel Wire/flat as per IS-1554 part-I.

3.3.8.2 ETHERNET/VIDEOCABLE.

Shielded twisted pair, Category 6, 23 SWG solid copper conductor, PE insulated, Outer jacket FRPVC. Suitable for Network of 10/100/1000 mbps Ethernet.

3.3.8.3 OPTICAL FIBRE CABLE.

This shall be minimum of 6/12fibre, armoured steel/electrical chromium coated steel (ECCS) tape, HDPE sheath, Strength by steel wire/rod. Operating temperature 0 to 70 degree C

Optical fibres shall be single mode compliant to ITU-T G652 and fibrecolours shall be as per IEC-600793-2 & IEC600304. Fibres shall be coated with UV cured double acrylic resin.

This shall have moisture barrier of polymer coated Aluminium tape / water swellable tape. Inner sheath shall be HDPE and outer sheath shall be FRLS PVC.

© 2022 MECON Limited All rights reserved

4.0 VHF COMMUNICATION SYSTEM

4.1 General

This section covers the technical requirement of VHF communication system.

VHF communication system is intended for instantaneous two-way radio communication amongst base station and a number of mobile/ portable hand held trans-receiver sets in the Steel plant complex.

In addition to the above, hand held trans-receiver sets shall be provided with Dual Tone Multi Frequency (DTMF) dial pad to interface with telephone exchange of the plant. Telephone interface equipment shall also be provided.

Tenderer shall supply all VHF communication system equipment with frequency band after obtaining approval from statutory authority of Govt. of India. However, application, if any, required from Purchaser end, shall be filled by Purchaser.

Each control room shall be provided with minimum 1 number of base station.

4.2 Design Basis

a) The equipment shall use synthesized frequency control. The frequency channel shall be easily programmed and provide extremely stable frequency operation. It shall be possible to program the sets up to 12 channels or more by use of PROM & E-PROM.
b) The Trans-receiver sets shall operate on simplex / semi-duplex mode.
c) All controls on the sets shall be positioned in a manner so as to be conveniently operated.
d) Protection against misuse and reverse battery polarity to be provided.
e) The equipment shall be light in weight and designed for low power consumption.
f) The equipment shall be weather proof rugged in construction and designed for continuous and reliable operation under adverse environmental and operating conditions of a power plant complex.
g) The mobile stations to be used in the cranes / moving machines shall be able to take the shocks and vibrations of these machineries.
h) The equipment shall require minimum of maintenance and be easy to maintain.
i) The trans-receiver sets shall be designed for having high carrier stability with adequate suppression of spurious emission and a low distortion.

© 2022 MECON Limited All rights reserved

j) The units such as transmitter, receiver, power supply unit shall be mounted on separate PCB for ease of maintenance and serviceability.

k) The Trans-receiver sets shall have LCD display for visual indications regarding channels with back lighting for operating in a low light environment.

4.3 EQUIPMENT DETAILS

The VHF radio communication systems shall comprise of the following :

- Required Nos. fixed Tran receiver sets as per process & operational requirement as base stations or as indicated in Package TS.
- Required numbers of walkie-talkies with DTMF dial pad to interface with telephone exchange.
- Telephone interface equipment shall also be provided.
- Each of the trans-receiver stations complete with connectors, cables, power supply unit, Ni-MH rechargeable battery, battery charger, suitable antenna units and mast / structure for the base station antennas.

4.4 PORTABLE HAND HELD TYPE SETS

The trans-receiver set shall be compact, lightweight having low power consumption.

The sets shall be fully IC based, modular in nature, synthesized frequency controlled, with multi channel facility.

Each trans-receiver set shall comprise of transmitter section, receiver section, a control unit complete with all controls, microphone, speaker, built-in helical antenna and rechargeable 12V Ni-MH battery all housed in a splash proof cabinet cast from aluminum alloy.

Each set shall be provided with a rugged leather carrying case.

The set shall have the provision for using earphone.

Technical parameters :

Frequency range	:	Frequency synthesised over the range of 134 - 174MHz

© 2022 MECON Limited All rights reserved

RF power output	:	1 to 5 Watt (variable)
Channel spacing	:	12.5 / 25 KHz
No. of channels	:	12 or more
AF output	:	Minimum 0.5 Watt
AF distortion	:	Less than 5 % at 1 KHz
Power supply	:	12 V Ni-MH battery (rechargeable)
Type of operation	:	Simplex or semi-duplex
Type of antenna	:	Helical spring antenna
Operating temperature	:	0 - 55 degree Celcius

4.5 BASE / MOBILE TRANSRECEIVER SETS

The trans-receiver sets shall be fully solid state modular in design, synthesised frequency controlled, multi channel, based on the latest development in VHF communication field.

The set shall be compact, light weight having a splash proof cabinet cast from aluminum alloy. It shall have low power consumption.

Each trans-receiver set shall comprise of transmitter section, receiver section, a control unit complete with all controls, microphone, loudspeaker and antenna unit.

The base station shall be designed to work from a 240V AC mains supply. However a maintenance free battery of suitable capacity along with a charger unit shall also be considered for the base station.

The mobile stations shall be provided with a maintenance free rechargeable 12VNi-MH battery for power source.

The sets shall have -

- Digital channel display.
- Provision for connecting external speaker.
- Provision for interfacing with telephone exchange.
- Provision for selective calling facility.

The transreceiver sets shall be so designed as to be easily configured into fixed base station / mobile stations, as required. The equipment shall be supplied with full range of accessories so that it shall be suitable use as mobile / static applications.

© 2022 MECON Limited All rights reserved

The set shall be supplied with following accessories when used as a Fixed base station.

- Desk top type microphone assembly.
- GP antenna / Yagi antenna with RF cable & connectors.
- Power supply unit complete with battery set, charger unit and DC power cable for fixed stations.
- Mast required for the antenna unit.

The set shall be supplied with following accessories when used as a Mobile station in moving cranes / machineries.

- Fist type microphone assembly.
- Mounting assembly for mounting in vehicles.
- Antenna assembly with RF cable for mobile use.
- Earphone facility / external speaker.

Technical parameters

Frequency range	:	Frequency synthesised over the range of 134 - 174MHz
RF power output	:	25 Watt
Channel spacing	:	12.5 / 25 KHz
No. of channels	:	12 or more
AF output	:	Minimum 1 Watt into 8 ohms load
AF distortion	:	Less than 5 % at 1 KHz
Type of operation	:	Simplex or semi-duplex
Type of antenna	:	GP/YAGI/WHIP antenna as per requirement
Operating temperature	:	0 - 55 degree Celcius

4.6 Battery Charger

Portable single phase battery charger shall be suitable for charging at least 6 nos. 12 Volts Ni-MH batteries at a time.

The unit shall comprise a transformer provided with mains voltage tapings, full wave bridge silicon rectifiers and controlling choke. The charger shall be provided with mains isolator

© 2022 MECON Limited All rights reserved

switch, rotary switch for selecting different charging modes, flush mounted charging current DC ammeter, supply ON/OFF indication lamp and protective fuses.

The entire assembly shall be housed in a sturdy sheet steel box having proper ventilation arrangement, terminals with insulated knurled screwed knobs for connecting to batteries and provided with mains and battery leads and pair of battery charging clips with marked polarity.

5.0 SERVER BASED IP-PBX SYSTEM

5.1 GENERAL SCOPE

This section covers the technical requirement of Server based IP-PBX system along with all other telecommunication system equipments, cables,etc.

The scope of work shall include complete design, engineering, manufacture, factory testing, inspection, packing, supply, storage, handling at site, erection, integration, testing, commissioning & putting in to satisfactory operation of the proposed Hot redundantserver based IP Telephone Exchanges along with remote IPPBX units on OFC network and associated other equipment, matching MDFs for shop floors. Capacity of Telephone exchange and Audio conference system shall be as described in TS.

The tenderer shall include in his scope of supply system/ component/ accessories and software required to make the equipment and system complete in all respects even though every individual item may not have been mentioned specifically in the specification.

It also includes supply and laying of FO cable as per site requirement to complete the system as per specification.

5.2 THE SCOPE SHALL BROADLY COVER BUT NOT LIMITED TO THE FOLLOWING:

- Supply, installation, integration, testing, configuring & commissioning of Hot standby Server based IP-PBX of required capacity (analog lines/digital/IP lines), wired up and with provision for future expansion, shop level Remote IPPBX units & MDFs as per plant requirement specified in TS including development, supply & installation of required software for the total integrated system along with two sets of back up.

© 2022 MECON Limited All rights reserved

- The Servers, Central IPPBX Exchange Panels, Power supply including battery, PCs, Monitors, Printers, Network Switches etc. shall be installed in Telephone exchange Building/Rooms. Location of redundant server shall be away from main Server as indicated in TS. Battery shall be located in a separate room. The system shall be complete with Centralised complaint handling system, Centralised network monitoring system, connectivity with Service providers along with associated equipment including hardware & software. The hardware if any & software, required to connect Service provider mobile sets of the employees shall be in the scope of the tenderer. The DID/DOD inter-connection (Hard ware &Soft ware) with BSNL/other service providers shall also be in the scope of the Tenderer.
- Supply, Laying, Termination and Testing of **inter-connecting ~~Single mode~~Fibre Optic cables, Telephone Cables, Power Supply Cables** and other required cables including special cable if any.
- Structured cabling for IP phones including the switch and CAT6/FO cable as per locations of phones.
- Earthing of the Proposed exchange System, all remote units and other associated system as per IS 3043 with latest edition, standard with copper plate& copper strip.
    - Suitable surge protection system to protect the entire system from surge.
    - The connectivity of IPPBX media Gateway/Cabinet stack with the Server should be on IP and also duplicated so that any one link or Card fails, redundant should take controls immediately without disruption of services.
    - The Audio Conference System proposed should be of same OEM make so that it can integrate with quoted IP-PBX system seamlessly & should view/manage through single/centralized Management Tools located at Telephone exchange building.

5.3 GENERAL PHILOSOPHY OF SYSTEM

In the proposed Hot Redundant server based IP-PBX system, one server is located at Telephone exchange Building and hot - standby server shall be physically located at a different building/location as indicated in TS & connected over high speed hot redundant IP/Ethernet link. In case of failure of main server at Telephone exchange Building, the hot standby Server will get activated & run entire system without disruption of any ongoing

© 2022 MECON Limited All rights reserved

calls (hot standby). During the commissioning each server shall be loaded with user database.

The proposed IP PBX shall be fully equipped for minimum 20 junctionsconnectivity with BSNL/other service providers on E1/PRI on Cu / OFC. This will also have provision of software programming for access code required for both-way connectivity with BSNL/other service provider mobile system. The main IPPBX at plant and all remote units shall have provision of connectivity on analog CO lines for back up junction connectivity. In case of failure of total OFC link, units at Telephone exchange Building and remote units shall work with their own local survival server with junction connectivity on analog CO lines during this period.

5.4 FEATURES & FACILITIES OF IP PBX

The IPPBX redundant Servers shall be provided with the following features as a part of its telephony functions. The software details to be demonstrated and handed over to Purchaser for enabling or disabling of any features are listed below. Accordingly, Tenderer shall include required hard-ware/soft-ware to get all features/functionality.

Station Call - User can dial any extension anywhere in plant & other areas by dialing simple extension number under unified dialing scheme.

Support pulse as well as tone dialing from an extension.

Abbreviated dialing.

Call coverage – min 5 independent coverage paths for various incoming call.

Authorization Codes -5 digit authorization code to make outgoing calls for ensuring no misuse of the system with enabling / disabling facility to be used by system administrator.

Automatic Call Back - User can register ACB feature to any extension across all locations between Plant, ADM., Township or any other remote gateway of this IP-PBX.

Call pickup within the group as well as outside the group.

Alternate Routing - Automatically re-route calls which encounter a busy trunks on the initial route. Automatic digital translation is carried out by the system. Provides the possibility of reaching external destinations via different routes.

© 2022 MECON Limited All rights reserved

Voice guided assistance Announcement System - The system should be able to provide contextual voice guided assistance with codes in English and Hindi to all users irrespective of type of phone for all telephone feature like busy extension / trunk, Call Forwarding, Wake-up Alarm/ Registration/ Cancellation DID messages, Appointment, Reminder Alarm/Registration/Cancellation, Wrong Dialing of Extensions etc.The system should support at least 500 such simultaneous callers with recorded voice announcements. The announcements should be digitized and stored in electronic memory devices. The system should be able to store minimum of 1000 such voice announcements.

Real time Call Detail Recording – The system shall provide detailed call information on all incoming and outgoing calls on specified trunk groups and stations, including those administered for intra-switch recordings, and send this information to any serial printer or other CDR security device and PC through the LAN. Call billing application software shall also be loaded which shall provide various types of reports as and when required. Necessary hardware and software if required to be quoted separately. In case the call billing application is offline due to PC failure or any other network related issues the call server should buffer the CDR's for all incoming and outgoing calls for a minimum duration of last 30 days.

Malicious Call Tracing/Record – Records detailed call information on all incoming calls (trunks & stations) on any station at any point of time. This information can be stored in any file and can be sent to any printer or other CDR security device.

Class of Restriction – Defines different call origination and termination privileges. There should be support for minimum up to 50 CORs in the system.

Class of Service - Defines whether or not voice terminal users may access the following features and functions: Automatic Callback, Call Forwarding, Call. Forward Busy/Don't Answer, Data Privacy, Extended Forwarding, Extended Call Forward Busy/Don't Answer, Priority Calling, Restrict Call Forwarding Off-Net, Personal Station Access, Trunk-to-Trunk Transfer Restriction Override, Off-Hook Alert & Console Permission.

Direct Inward/outward Dialing – The proposed system must support direct inward/outward dialing to/from external parties with metering facility in Plant &Township exchanges.

© 2022 MECON Limited All rights reserved

Day/Night Trunk Control – To reduce cost and improve system security it should be possible to restrict the access to certain trunks depending on time of day.

Distinctive Ringing – The system should provide audibly different ringing patterns between internal, external and special feature calls.

Flexible numbering plan – Support up-to 6 Digit for an extension number & Allow phone number assigned to a station to be changed through software.

Music on Hold – The system must provide music and/or a recorded announcement to callers on hold.

Group Calling - Administrator can create a hunt groups that allow two to eight extensions/telephones to ring simultaneously when calls are redirected to the group. Anyone in the answer group can answer the incoming call.

Least Cost Routing – It must be possible to use private networks and alternate public networks from different Service Providers to optimize your communications traffic in terms of both access and cost.

System Traffic Reports - Traffic statistics should be provided on incoming and outgoing trunk groups, attendant consoles, station hunt groups, and individual stations. The information reported must include the number of calls and call duration. The Tenderer must describe the proposed system's traffic reporting capabilities.

System Abbreviated Dialing – The system should have the ability to store a list of frequently called numbers that will be available on a system-wide basis to all users. Bidders must state the capacity limitations of the system including maximum digits per entry.

Uniform Numbering Plan - The system shall permit a uniform numbering plan (Closed Numbering Plan) system, to be used to simplify access to all extensions of different exchanges of the network. The system must be able to implement a uniform numbering plan up to 6 digit extension numbers for all sites. However connectivity to BSNL & Reliance mobile shall be through access code for incoming & outgoing calls.

Meet-Me Conferencing – The system must have ability to have meet-me conference between min 5 parties being any mix of internal and external lines.

© 2022 MECON Limited All rights reserved

This facility is different from 200 party audio conference systems. The proposed system should equip with 30 simultaneous 5 parties meet-me conference at each Telephone House, Township & Hospital location. All the remote shops will also equip with 10 simultaneous 5 parties meet-me conference each. The tenderer shall also mention the simultaneous numbers of meet-me conference in entire system.

CLI (Caller Line Identification) facility- Calling Numbers (internal & external) should be displayed on all analog extensions (FSK/DTMF support from fixed / mobile numbers).

System should offer In-Built/External Help-Desk software to support Automatic Call Distribution feature for complaint logging/emergency reporting etc.

Tenant Partitioning

- System should allow multiple tenants whereby each tenant can be assigned an attendant group for service with each group having its own queue.
- System should allow multiple tenants whereby each attendant group can serve more than one tenant.
- System should allow multiple tenants whereby each tenant can have a designated night service station and when an attendant group is put into night service, the facilities of each tenant will go to their night service station.
- System should allow multiple tenants whereby each tenant can be assigned a unique source for music that is most appropriate to the business of the tenant, including type of music, special advertisements, and so on to be heard when a call is on hold.

Trunk queue with callback (Automatic Callback for busy trunks) – The system call users back if users try to place an outgoing call over a trunk group when all trunks are busy. Callback queuing places outgoing calls in an ordered queue (first-in, first-out) when all trunks are busy. The system automatically places the callback call to the telephone when a trunk becomes available, and the user hears a distinctive burst signal, which indicates an Automatic Callback call from the system. When the user answers the callback call, the original call automatically continues. Redialing is not required.

Automatic Line Testing: The system should be configured to support testing of at least the following line parameters:

- A Limb to ground
- B Limb to ground

© 2022 MECON Limited All rights reserved

- Cross Insulation
- Capacitance
- Foreign potential
- Loop testing
- Disconnection testing.

Voice Mail System: The system should be configured to provide server base voice mail system with 16 port and 500 hours of storage for 500 users expandable to 1000 users to be distributed in entire network for internal as well as external callers. The voice mail system must be fully integrated with the call server and should be manageable from the same interface as for the call server. PC based voice mail systems are not acceptable. The VMS system should be from the same OEM.

Wake up Call facility/Appointment Reminder: The system should be configured to support wake up call/appointment reminder facility (voice prompt) for all users

Hotline Facility: Hotline facility between all subscribers shall be possible via system programming.

Integrated Voice guidance: The system should guide users during the various steps needed to activate specific features by means of voice guides that indicate the services available at each stage of a call.

5.5 NETWORK MANAGEMENT SYSTEM (NMS) AND COMPLAINTS HANDLING SYSTEM

5.5.1 NMS:

The system must include a dedicated network wide monitoring and management application based on latest technologies for all offered components including IPPBX, servers, switches, gateways, conferencing applications, printers, PC's etc at all specified locations along with detailed Fault management applications and detailed user configuration. A graphical network map and topology to be overlaid on top of entire plant property layout for accurate diagnostics and fault/ alarm management of different IPPBX components**. The proposed NMS should work for all components including switches irrespective of their make.**

5.5.2 COMPLAINT HANDLING SYSTEM:

© 2022 MECON Limited All rights reserved

The system answers an incoming call through an automatic fault logging system. Caller is asked to either book a complaint or find the status of a complaint. If the Caller books a new complaint, he or she needs to punch in the faulty extension number or telephone number. The application can ask the caller for alternate contact number. The system picks up the status of the booked number, accordingly system prompts for booking the complaint or reject the punched in number. The booked complaint will be deposited in the 'complain handling section' who is handling the complain of the particular equipment. The sections are provided with client terminals where in the technician can get the complaints printed on his terminal. The designated supervisor then input the necessary fault codes and updates the complaint status. Supervisor can get the complete history of a complaint at any point of time through the terminal. The application should be divided in to three main modules.

a) **Main Unit:** An IVRS system, located in Plant Exchange will accept anincoming call and take the complaints from the callers complaints through 1 no of PRI trunk. It also facilitates the technician to update the status of a complaint. Minimum three nos of PRI that will be connected to server based PBX system shall be used for the above purpose.

b) **Terminal Utilities:** A supervisor, located in Plant exchange premises can view all the pending complaints and can update them. He can also build up the database for his department. Option to print the docket numbers online on the printer as and when a complaint is booked.

c) **Client Modules:** These modules are required to be installed in different locations where the particular complaint-handling department wishes to get their complaint notified. Necessary hardware, software including PCs, printers, and switches is also in the scope of tenderer. The server system will send a screen pop up to the designated client terminal and a copy of it will be printed on the printer connected to the client terminal.

Required minimum hardware and software for Complaint Management System including:

- Nos of PCs as per specification along with UPS
- Nos of DMP Printers as per specification
- 1 no of PRI for connectivity to server based IP PBX
- Required software.

5.6 SYSTEM ADMINISTRATION AND MAINTENANCE FACILITIES:

© 2022 MECON Limited All rights reserved

The IPPBX system shall be provided with minimum of Two numbers of Administrative Console with a simple and user friendly web-based interface that supports system/ administrative & management tasks listed below.

- Configuration and maintenance of telephony features, traditional routes and trunks, numbering plans.
- Maintenance commands, system status enquires, backup and restore functions.
- The system should have easy to use menu based options to manage and monitor the system
- Data collection for traffic and billing records including DID/DOD through service provider.
- Malicious call tracing for internal and external calls
- The system should be configured to support industry standard call billing software/applications on Ethernet and V24 port.
- The system should allow remote access over LAN/WAN or PSTN for maintenance functions – for both software and hardware of the server.
- The system shall continuously run self-tests and log any kind of alarm immediately. The fault information data may be displayed on the system terminal, and may raise an alarm both on an external alarm or a pre- defined extension
- The system shall allow multiple administrators to log in simultaneously, both locally and/or remotely.
- The system should also allow management through V24 port or Telnet over the LAN.

5.7 SPECIFICATIONS OF ACCESSORIES

5.7.1 IP OPERATOR CONSOLE WITH DYNAMIC SPECTRUM SHARING(DSS)

© 2022 MECON Limited All rights reserved

- Control access to specific trunk groups
- Verify the status of a voice terminal that appears to be out of order and quickly to identify a faulty trunk
- 1 x 30 character LCD display
- Support Handset/Headset connectivity
- Support min 10 fixed buttons, 15 programmable feature buttons
- 10 fixed Direct Trunk Group Select buttons
- Extension/Trunk fault Verify feature
- Jack for connecting optional DSS (Direct Extension Select & Dialing with LED Visual Indication)
- Audio-Visual Indication for incoming calls
- Identification of calls in hold or waiting
- Attendant Consoles are desk mounted only
- 200 one-touch key with LED indication DSS module.

5.7.2 HIGH END CONFERENCE PHONE

The high-end conference Phone should be equipped with the following:

- Noise reduction technology which automatically minimizes PC, projector, and HVAC sounds
- Independent microphone, echo-cancelled channels that optimize to their individual environment for better sound
- Extension mics to provide even greater room coverage for larger rooms with 2 cardioid extension
- microphones (included), 80 Hz-7 kHz
- Subwoofer for audio extension down to 80 Hz, which provides clearer, lifelike sound
- Display
- High-resolution backlit graphical LCD
- Keypad
- 12-key telephone keypad
- On-hook/off-hook, conference, mute, volume up/down keys, menu, navigation keys
- 3 content-dependent soft keys including redial, hold
- Network connection: 2-wire RJ-11 analog PBX or PSTN interface

© 2022 MECON Limited All rights reserved

- Audio Enhancements
- Automatic Gain Control (AGC)
- Dynamic Noise Reduction
- Gated microphones with intelligent microphone mixing
- Full-Duplex Speakerphone plus (i.e. 2-way speaker phone facility for hands-free dialing and speech)

5.7.3 IP PHONES

- 8 line appearance/feature key buttons – with dual LED's (Red, Green)
- Backlit display – 3.5" diagonal, 3 rows by 20 characters
- Full – duplex speaker phone & Massage waiting indication
- Four-way navigation cluster button
- Volume button- (separate volume levels in the handset , headset, speaker and ringer)
- Fixed Button like contacts button, Call Log button, Redial Button, Speaker button, Mute Button, Headset Button, Hold Button, Conference Button, Transfer Button etc.
- Ethernet (10/100) line interface with a secondary 10/100 port for collocated laptop or PC
- PoE 802.3 af class 2 device, also supports a local power supply
- Contacts application – supports up to 100 entries
- Call Log – contains last 100 calls
- SIP/H323 protocol support
- Standards – based codec support: G.711, G.726, G.729 A/B
- Pixel based display
- Six contextual key and minimum 10 soft key buttons
- Quick-access Voicemail Message button
- Contacts adjustment
- Call log button
- Redial button
- Speaker button
- Mute button
- Headset button
- Hold button
- Conference button
- Transfer button

© 2022 MECON Limited All rights reserved

- Drop button

5.7.4 CALLING LINE IDENTIFICATION (CLI) ANALOG PHONE

- CLI Display with DTMF & FSK support
- All phones (analog and conference) shall be with plant logo
- Shall work in hands free mode with inbuilt speaker & microphone.
- Pulse/tone dialing switchable.
- Electronic ringer with adjustable volume.
- Flash, redial functions.
- Desktop model.

5.8 AUTOMATIC LINE TESTING EQUIPMENT (ALTE)

Automatic Line Testing Equipment (ALTE) connected directly on ports of exchange shall be supplied, installed, commissioned and demonstrated to the satisfaction of the purchaser. This will have the following features:

a) Test one by one all parameters of subscriber line
b) Tests, compress & then display's exact condition of the line.
c) Digital display of:
- Foreign potential (AC/DC)
- Cross Insulation.
- Line capacitance.
- Loop resistance.
- Dial speed.
- Pulse counting or make-break ratio of pulse.

d) New Line tone test
e) Shall test all types of push button telephones both pulse & DTMF types
f) Ring and speech test
g) Rugged compact and moduled ABS body

ALTE will be complete with all necessary hardware along with peripherals. Each ALTE should be operated from its centralized panel. This should check all standard parameters

© 2022 MECON Limited All rights reserved

of the subscriber lines without physical patching at the MDF as per standard.

5.9 TECHNICAL SPECIFICATION OF AUDIO CONFERENCE SYSTEM.

5.9.1 Audio conference system shall be an open conferencing platform with duplicated power and control equipments and built-in H.323/SIP support. The system shall be integrated with proposed IP PBX using SIP trunks.

The system shall be based on latest technology. It shall be possible to connect users through different type of terminals (analog, IP Phone, Mobile users etc) including LAN and PC connectivity. The system architecture shall be on latest IP Platform to ensure seamless integration with server based IP PBX. The system must be from the same make OEM as of IP PBX.

Platform Capacity:

- The System should be capable to expand in future without change of Hardware.
- Equipped with 50 Ports & expandable up to 100 Ports on Same Server.
- It should have LAN ports (10/100/1000 Ethernet).

Platform Specifications:

Minimum Specification of Server

- Open Standard Linux/Solaris Operating System.
- Intel Xeon/AMD Quad/Dual Core min 3 GHz Processor
- Min16 GB RAM
- IDE CD/DVD-ROM drive
- Min 2 nos. of 500 GB or higher SAS Hard Disk Drive Storage Capacity with RAID-1 architecture
- Two GB Ethernet ports
- The server hardware shall be of latest configuration at the time of supply
- Duplicated Power Supply & Fan units
- The system shall be based on latest technology. It shall be possible to connect users through different type of terminals (analog, IP Phone, Mobile users etc) including

© 2022 MECON Limited All rights reserved

LAN and PC connectivity. The system architecture shall be on latest IP Platform to ensure seamless integration with server based IP PBX.

- The system shall be equipped with necessary hardware and software to establish simultaneous minimum 50 participants in a single conference or multiples of sub conferencing group. It should be expandable up to 100 all party conference using the same control unit.
- The conference will be initiated from a PC based central console at 'Plant exchange/Plant Control' with all the participants in listening mode (without speech battery) by default. Only conference administrator will have the authority to allow/disallow participants to talk during conference from Central Console by providing speech battery
- Conference management and administration shall be simple and easy in nature. It shall be possible to administer the system though PC from anywhere connected over IP network.

5.9.2 **Conference Setup Modes:**The ConferencingBridge will accommodate the following conference setup modes:

- **Meet-Me:** In a Meet-Me conference, Participants dial into the platform at a predetermined time. The system should have the following types of Meet-Me conferences,
- **Attended conferences:** Attended conferences can be silently monitored by the Administrator to ensure quality and provide help to Participants.
- **Unattended conferences:** The Conferencing Bridge can also permit conference Participants to dial directly into the system and access their conference without any attendant assistance. Conference security is through the use of conference codes and optional individual PIN code.
- **Dial-Out facility**: In this type of conference configuration, a conference moderator or operator can dial out to Participants and adds them to a conference. The system should have the following types of Dial-Out conferences,
- **Manual Dial:** In this scenario, an operator dials out to conference Participants individually using GUI base application software and brings them into the conference.
- **Fast-Dial:** The Fast-Dial feature, also referred to as speed dial, allows an operator to initiate outbound calls using minimal keystrokes. Here, the operator accesses a stored list of names and numbers and highlights the individual to be called.

© 2022 MECON Limited All rights reserved

- **Crisis Dial / people at once:** This Dial feature is very similar to Fast-Dial whereby the operator can use a stored dialing list to quickly set up a conference. However, allows the operator to initiate all of the calls simultaneously.
- **Moderator Blast-Dial/group dial:** A Moderator also has the ability to initiate a Blast Dial, and can dial out to a list of participants, either automatically, upon entering the conference, or manually by entering a DTMF commands.

5.9.3 Moderator DTMF Features: Moderators are granted special privileges that can be activated using telephone. These features include:

- Security (Enable/Disable)
- Conference Gain
- Lecture Mode (Start & stop)
- Originator Dial Out
- Headcount Request
- Digital Record/Playback
- Unattended Sub-Conferencing
- Billing Code
- Moderator Hang up – Toggle
- Participant DTMF Features
- Contact the Operator for assistance
- Play all names of participants
- Play all number of Participants
- Mute
- Add participants

5.9.4 **Conference System Features:**The Conferencing bridge should offer all of thefunctionality necessary to conduct productive and successful conferences, including:

- **On-Demand Partitioning-**The Conferencing Bridge can be partitioned to support different categories of conference calls on the same ConferenceBridge.
- **Entry/Exit Tones and Voice Messages -** Voice messages, alone or in conjunction with warning tones, make Participants aware of conference events as they occur and also can prompt Participants for further action.
- **Music -** The Music feature provides for music on hold. This functionality is used to entertain Participants that are waiting to enter the conference.

© 2022 MECON Limited All rights reserved

- **Attended Conference Protection -** This feature allows an operator to set up and reserve a conference "room" in advance.
- **Conference ID** -The Conference ID feature provides for the identification of conferences for report generation and differentiates conferences with the same name.
- **Listen Mode -** This feature allows conference operators to listen to individual lines or a range of lines to test the audio quality or detect disturbances without affecting conference activity.
- **Series Start & End Dates -** Recurring (daily, weekly, monthly) conferences can be scheduled for a specified time period.
- **Conference Hang-up -**All of the lines in a specified conference may be hung up simultaneously at the conclusion of a conference.
- **Event Notification -**The system can be configured to provide the operator with audible and visual signals upon disconnection, help request or enter queue activity.
- **Conference Reports -** The Conferencing system has several reports that can be either available during (Conference Activity Report) following the conference conclusion (Past conference activity).
- **Digital Record/Playback -** The Conferencing Bridge shall have a hard-drive configuration to provide up to minimum 1000 hours of digitally recorded conferences internally/ externally. No third party solution is acceptable.

5.9.5 **Administration Features:** From the administration main menu, an Administrator should be able to configure the system to reflect specific requirements. Items that can be modified by an Administrator include system, supervision, and operator and channel configuration. Comprehensive system statistics are available to aid in system administration. These reports include Call Detail Reports (CDR), Conference Detail Reports (CODR), Conference Reports (COR), traffic statistics i.e, billing records including DID/DOD through service provider, operator transaction logs, operator configurations, channel configurations, and system configurations.

5.10 Maintenance Features shall have the following features:

- **Power-Up Diagnostics** -Comprehensive system diagnostics are to be performed when a system power-up is initiated to confirm that every aspect of the system hardware is in order before continuing to the next step in the procedure.

© 2022 MECON Limited All rights reserved

- **On-line Diagnostics** -The Conferencing Bridges are to be monitored by comprehensive on-line diagnostic capabilities. A software check is to be performed regularly.
- **Remote Diagnostics** - All systems are to be configured with a modem for remote access (by Support technicians) to the system. The features that should be available through remote access include attendant, administrator, maintenance, reboot, file transfers, software updates, dump analysis, network management statistics and system logs.
- **Maintenance Reports** -Reporting capabilities are also available for system maintenance. These reports include alarm reports, system message logs, network statistics and network configurations. The reports can be printed to a printer or to disk.

5.11 TECHNICAL SPECIFICATION OF OTHER ACCESSORIES.

5.11.1 MAIN DISTRIBUTION FRAME (MDF)& ACCESSORIES

Main Distribution Frame with accessories for the capacity mentioned shall besupplied, installed and commissioned satisfactorily at all locations. The job includes the Supply, Erection, Testing and Commissioning of LSA-PLUS connection modules of suitable capacity, fitted with Integrated Protection Module (IPM) on all exchange side lines and stainless steel back-mount with acrylic cover on these modules. Exchange side and line side MDF should be housed in separate cabinets at all locations. These modules shall be mounted on MDF structure/frame. The job also covers supply, laying and termination of all MDF cables from proposed exchanges and remote units in cable racks/trenches. The cable shall be laid on cable rack/trenches in such manner that rodent entry is blocked. The job also includes necessary civil, air condition and fabrication job required to complete the project in all respect. The MDF should be original OEM make & details BOM along with MAF (Manufacturers Authorizes Form) needs to be submitted.

5.11.2 FIBRE OPTIC CABLE & CABLE LAYING.

Supply and installation of armored outdoor optical Fiber Cable (single mode) in ring topology. Minimum of 50% spare core shall be provided with each cable. All the cores

© 2022 MECON Limited All rights reserved

shall be terminated.

- The cable shall be laid through HDPE pipe and two different routes shall be followed for redundant cables.
- The cable should be of the following specifications:

  i Dual PE jackets, one outside & other inside the corrugated steel tape
  ii Gel filled with multiple loose tubes
  iii 250 micron coated fibers
  iv Nominal cable dia. (14.5-15) mm
  v Minimum bend Radius: 20X cable diameter (during laying/installation)

I. Optical Fiber Cable -The Optical Fiber cable shall be Direct Burial Type, Single Mode having 9/125 micrometer Low Water Peak Fiber, Armored, as per ITU-T G.652 standard and shall support optical source wavelength as per requirement, flexible enough to allow safe bend, of Fiber with standard core identification mark. The cable must have UL verification for use in such application (supporting documents shall be attached).

II. Patch Panel - Patch Panel shall be made of aluminum, powder coated, with Rack/Wall mounting arrangement, having enough space to store extra cable with rubber grommets at the entry points for tight sealing. The panel shall be complete with required couplers, adapters, connectors etc.

III. Patch Cords: - Patch cords shall be used to optically connect the cable fiber to the Fiber Port of Exchange Hardware. The connector & length of the cord shall be as per requirement. The cord shall conform to TIA/EIA/ITU specification and factory connectors.

IV Tolerable Losses: - The losses in various Fiber Optic Components shall be limited to values as per following details:-

- Single Mode Fiber: At 1310 nm - 0.35 – 0.4 dB / Km.
- At 1550 nm - ≤ 0.22 dB/Km
- Optical Connectors: 0.1 – 0.75 dB.
- Fusion Splices: 0.1 dB.

© 2022 MECON Limited All rights reserved

5.11.3 Laying& Termination of Optical Fiber Cable:-

i) The Cable shall be laid through HDPE pipe directly in the earth at a depth of minimum 1.2 Mtrs. from Ground Level, on a bed of riddled dry riverbed sand, encased by first class brick on two sides and finally covered by 900X300X50 mm size RCC cable protection Slab on top such that the top of the slab shall be at a depth of minimum of 1.0 Meter from GL.

ii) The excavation of trenches shall be done straight as far as possible. Width of the trench shall be minimum 400mm at the bottom. After cable laying, the trench shall be totally back-filled in layers with each layer rammed & consolidated and sufficient allowance made for settlement.

iii) In case of Road Crossing and at the Road Lamp Posts points on Link Road divider, the cable shall be taken through 50 mm NB Medium Gauge GI Pipe laid through boring under the road. The ends of the pipes must be sealed with jute soaked in bituminous compound.

iv) Each cable shall be clearly labeled using aluminum cable tags through out the entire length at a distance of 50 Mtrs on straight runs and at all crossings/ bends. RCC Cable route markers shall be provided directly above cable tags but with a spacing of 100 Mtrs on straight runs and at all crossings/bends. Where ever two OFC cable s are laid in the same trench then the HDPE pipe shall be of different colour.

v) The fiber cable shall be terminated at the patch panel. Each cable shall be fixed to the respective termination panel by mechanical means. Fiber slack shall be neatly coiled inside the termination panel. The cable shall be stripped upon entering the termination panel with individual fiber routed to the termination point.

vi) Generally Cables shall be laid buried under ground. However, considering site condition, if required cable may also be laid on racks / trays of the over ground cable galleries .

vii) The tenderer shall have to do any fabrication / modification work involving erection of cable supporting structures, if required, including supply of cable supporting racks, channels & other erection materials.

viii) During the period of construction, if the progress of work interferes with any

© 2022 MECON Limited All rights reserved

existing installation / operational requirements of the Purchaser such interference shall be resolved as directed by the concerned Authority.

5.11.4 SMPS BASED FCBC & BATTERY BACK-UP:

The system shall derive its power supply from the combination of Float Cum Boost Charger and Battery Banks. During normal period the system will draw power fromFCBC and in case of AC power failure / failure of FCBC, battery bank shall supply DC power to the System. FCBC should be protected against lightening surges, over voltage, under voltage, short circuit, over current etc with digital I/O meters & LEDs for display. There shall be two sets of battery backups at each location (Plant, township &remoteunits in shops) with a switching cubicle to connect the FCBC's, Battery Banks and Load in different combination (load & trickle). Each FCBC shall have separate Float and Boost Charger and shall be capable of charging both the batteries simultaneously one at boost charge and other at Float Charge. Facility should be provided to changeover from one FCBC to other FCBC in case of failure of one of the FCBCs. Also there must be provision of paralleling of Battery Banks in case of prolonged AC power failure or FCBC failure. The ratings of FCBC and battery backups should be same for Telephone House, Township Exchange.

Battery management software shall be provided for all battery sets.

5.11.5 ELECTRONIC EARTHING

The whole system should be suitably earthed by making electronic earth pits as per IS 3043 and extending it to the system. The earth resistance of each pit should be less than 0.5 ohm.

5.11.6 SPECIFICATION FOR PCS &PRINTERS

A) PC

PCs shall conform to the following minimum specification. However, the specifications shall be latest available at the time of drawing approval.

- i7 Core with 2.0 GHz (min) cycle time, 2MB L2 cache

© 2022 MECON Limited All rights reserved

- 8GB main memory – DDR2 RAM
- 1TB hard disk
- 1 No. DVD R/W drive
- 21" LEDcolour monitor for all PCs
- Multimedia Keyboard
- Optical Mouse
- 10/100 MBPS Ethernet Card
- 6 USB ports (2.0 & 3.0), 2 Serial ports, keyboard interface, SVGA interface
- Graphics Accelerator Card
- 8 GB Pen drive
- Windows 10 or latest with manuals and Media CD
- Antivirus software (3 years upgrade)

B) LAPTOP:

The laptop shall conform to the following minimum specifications:

- Intel Core i7 10th Gen or Latest
- 8 GB RAM
- 1 TB hard disk
- Internal DVD dual layer writer
- Connectivity: - LAN – 10/100/1000 MBPS Ethernet Card / Bluetooth /WiFi
- Multimedia keyboard
- USB Optical scroll mouse
- Integrated modem
- No. of USB, Firmware ports: - 4,1
- No. of serial port minimum 1 number.
- HDMI Port
- On board video memory: - 256 MB
- Intel UHD Graphics 620
- Screen Size :- 15"
- Rechargeable battery with minimum two hours backup and battery charger
- Windows 10 OS /latest edition
- Antivirus Software with minimum 3 years up gradation license.

© 2022 MECON Limited All rights reserved

- Carry bag

C) A3 coloured laser printers:

- A3 Coloured printing
- 16 ppm, heavy duty
- 1200 x 1200 dpi
- Postscript and barcode capability
- Network printing capabilities with hardware (network interface card).
- Interface: Centronics and USB
- A3 and A4 Scanner

D) A4 black and white laser printers:

- 14 ppm heavy duty
- 1200 x 1200 dpi
- A4 black and white printing
- Postscript and barcode support
- Interface: Centronics and USB

© 2022 MECON Limited All rights reserved

6.0 PLANT TELEPHONE CABLES & ACCESSORIES

6.1 GENERAL

This section covers the technical requirement of Plant Telecommunication cables & accessories.

Plant telephone cable & accessories is intended for interconnecting all plant telephone cable network with Main IPPBX system/ Remote location IPPBX for satisfactory operation of the telecommunication system.

The General scope of work includes complete design, engineering, supply, storage at site, erection, installation, laying of cables, testing, and commissioning of plant telephone cables and accessories.

The scope of work of the bidder shall start from subscribers side of Main Distribution Frame(MDF) of IPPBX which include the following:

a) Interface from Subscribers side of Main Distribution Frame (MDF) up to the telephone handset
b) Main Telephone Junction Boxes and Sub-Telephone Junction Boxes with required krone connectors, Rosette Boxes etc
c) Supply and Laying of cable from Subscribers side of Main Distribution Frame (MDF) of IPPBX upto Telephone handsets inside the shop premises including jumpering of cables.

The integrated cable network for the shop shall be designed by the respective shop package tenderer keeping 50% spare cable pairs and shall terminate all cables in a cabinet / Distribution box (D.B). From this cabinet / D.B, the respective shop package tenderer shall bring the cables to subscriber side of M.D.F of IPPBX of the concerned shop including jumpering of cables in the M.D.F.

The shop package tenderer shall work in co-ordination with the centralized package tenderer of IPPBX system. However the IPPBX Telephone exchanges shall be provided by the inter plant package contractor / purchaser.

Tenderer of Shop package shall supply, install telecommunication equipments including cables, etc& connections at each room of the Office buildings, Shift offices, Control rooms/control pulpits/cabins, Laboratory rooms, all rooms of administrative buildings/management buildings, Reception centres, Conference rooms, Store rooms,

© 2022 MECON Limited All rights reserved

Computer rooms, Panel rooms of HT/LT substation buildings/ECRs/MCC rooms, security gates etc. Also Telephone connections shall be provided at important places in the shop floor as per process/maintenance requirement.

6.2 TECHNICAL SPECIFICATION OF CABLES.

Telecommunication cables

All cables shall have copper conductor. Each conductor shall consist of 0.51 mm dia. /0.63 mm dia. solid wire of annealed high conductivity copper & twisted in pairs.

All the external cable shall be armored, jelly filled multiple pair cable and the same for indoor use shall be PVC insulated, PVC sheathed as per relevant TEC specification.

In case of Office buildings/rooms, Control rooms/control pulpits/cabins, Laboratory rooms, all rooms of administrative buildings/management buildings, Reception centres, Conference rooms, Store rooms, Computer rooms where asthetic is prime importance, wiring of Telephone handsets shall be carried out in concealed manner using unarmoured cables/wire using PVC pipes/conduits.

In case of HT/LT substation buildings/ECRs/MCC rooms, Shift room inside ECRs, Security gates etc. wiring of Telephone handsets shall be carried out in surface laid conduits using unarmoured cables/wire.

All cables laid for inter shop shall be armoured type, buried under ground/laid through racks of plant cable network, if available as per site condition.

© 2022 MECON Limited All rights reserved

UTKARSHA ALUMINIUM DHATU NIGAM LIMITED

ESTABLISHING FACILITY FOR ALUMINIUM ALLOY MELTING, SLAB CASTING AND FLAT ROLLED PRODUCTS PRODUCTION FACILITY

GENERAL TECHNICAL SPECIFICATION
FOR
INSTRUMENTATION & CONTROL
(GS – 04)

MECON LIMITED
RANCHI - 834002

No. MEC/S/11/35/Q7R6/GTS/01/R0 **JUNE' 2022**

LIST OF CONTENTS FOR GS-04

CLAUSE NO.	DESCRIPTION	PAGE NO.
	INSTRUMENTATION & CONTROL - ABBREVIATIONS	2
01.	GENERAL	3
02.	ENVIRONMENTAL SPECIFICATION	3-4
03.	BASIC DESIGN CONSIDERATION	4 – 27
04.	GAS ANALYSIS SYSTEM	27–29
05.	LIQUID ANALYSIS SYSTEM	30-30
06.	CONTROL VALVES	30–35
07.	CALORIFIC VALUE ANALYSER	35-36
08.	FLAME DETECTOR	36-36
09.	CONVENTIONAL INSTRUMENT PANELS & CABINETS	36-39
10.	ELECTRICAL SYSTEMS	39–43
11.	PNEUMATIC SYSTEMS	43-44
12.	CONTROL ROOM DESIGN	44-45
13.	CABLE LAYING	45–47
14.	IMPULSE PIPE LAYING	48–48
15.	EARTHING	49-49
16.	GUIDELINES FOR SELECTION OF ERECTION MATERIALS	49–51
17.	INSTALLATION OF INSTRUMENTS	52-52
18.	CALIBRATION	52-52
19.	TESTING & COMMISSIONING	52–53
20.	QUALITY ASSURANCE PLAN	54-54
21.	ASSET MANAGEMENT	54-55

© 2022 MECON Limited All rights reserved

INSTRUMENTATION & CONTROL - ABBREVIATIONS

API = American Petroleum Institute
ANSI = American National Standards Institute
ASME = American Society of Mechanical Engineers
ASTM = American Society of Testing & Material
ATEX = Atmosphères Explosives
BASEFA = British Approvals Service for Electrical Equipment in Flammable Atmospheres
BS = British Standard
BIS = Bureau of Indian Standards

CCOE = Chief Controller Of Explosives
CENELEC = Comité Européen de Normalisation Électrotechnique
CMRI = Central Mining Research Institute

DCS = Distributed Control System
DIN = Deutsches Institut für Normung

ERTL = Electronics Regional Test Laboratory

FAT = Factory Acceptance Test
FISCO = Field bus Intrinsically Safe Concept
FM = Factory Mutual
FRLS = Flame Retardant Low Smoke
FRP = Fibre Glass Reinforced Plastic

HART = Highway Addressable Remote Transmission
HMI = Human Machine Interface
HRPVC = Heat Resistant Poly Vinyl Chloride

IPSS = Inter Plant Standardisation in Steel industry
IEC = International Electro-Technical Commission
ISA = Instrument Society of America
IEEE = Institute of Electrical and Electronics Engineers
IP = Ingress Protection

NEMA = National Electrical Manufacturers Association
NPL = National Physical Laboratory

ODBS = Open Data Base System
OEM = Original Equipment Manufacturer
OLE = Object linking and embedding
OPC = OLE for process control
OSHA = Occupational Safety and Health Administration

PLC = Programmable Logic Control
RTD = resistance Temperature Detector

SAT= Site Acceptance Test
SVGA = Super Video Graphic Array
TFT = Thin Film Transistor
USB = universal Serial Bus

© 2022 MECON Limited All rights reserved

01. GENERAL

01.01 This specification broadly covers the basic features & requirements comprising design, engineering, selection criteria, supply, installation guidelines & practices to be followed for all field mounted & control room instrumentation and control systems required for various shop units of the plant. Latest state-of-art technology based Instrumentation and control system shall be provided for the plant, with a view to achieve safe, reliable, efficient and trouble-free operation of the plant, as well as safety of the plant equipment and operating personnel.

01.02 Instrumentation & control equipment shall conform to the Bureau of Indian Standards (BIS) / Inter Plant Standardisation in Steel industry (IPSS) / International Electro-Technical Commission (IEC) / Instrument Society of America (ISA)/ DIN / BS / JIS and other internationally accepted standards as applicable, unless otherwise specified in the Technical Specification for Tender.

01.03 This specification will be the main guiding and deciding document and can be over ridden only by a Client standards in very specific cases or particular requirements, indicated if any in the main technical specification of the contract document.

01.04 Instrumentation & control equipment shall comply with the latest Indian Electricity Rules, along with their latest amendments regarding safety, grounding and other required stipulations specified therein for installation and operation of electrical systems in the plants.

01.05 All the Instrumentation & control equipment shall conform to the safety & hazardous area requirements stipulated in relevant BIS eg. IS: 9858-1981 on Safety requirements of electronic measuring apparatus, IS 616-1981 on Safety requirements of mains operated electronic apparatus, IS 3945-1978 on Specification of electrical instruments for hazardous atmospheres, etc. All the equipment shall be suitably protected from voltage surges, Electro Magnetic Interferences, Radio Frequency Interferences and also from Lightning, in specific cases. Wherever Indian standards are not available, IEEE, ISA, NEMA standards shall be applicable.

01.06 All equipment to be supplied and all work to be performed including system design and engineering, shall comply with the statutory requirements of Government of India and the State Government.

02. ENVIRONMENTAL SPECIFICATION

All instrumentation & control equipment and their accessories, including those to be used in air-conditioned control rooms, shall be rugged, industrial grade and suitable to withstand the operating conditions in the plant and atmospheric conditions.

These equipment shall be suitable for operating continuously under the environmental conditions indicated below: -

	Field instruments	**Control room instruments**
Temperature :	0 – 60°C	0 – 45°C
Relative humidity:	0 – 95%	0 – 80 % (non-condensing).

© 2022 MECON Limited All rights reserved

The enclosure protection class for various instrumentation & control equipment shall comply with the guidelines indicated in IEC/EN 60529./IS: 13947, Part-1, 1993. Generally, the following protection classes for cabinets, consoles, desks etc. shall be followed as a minimum:

i) Air-conditioned control rooms : IP 22
ii) Indoor non-air conditioned areas:
  a) Ventillated areas : IP 42
  b) Non-ventilated areas : IP 54.
iii) Outdoor areas : IP 65

All field devices shall be rated for minimum IP 65 protection class, unless otherwise specified against individual items under clause no. 3.0 of this specification.

03 BASIC DESIGN CONSIDERATIONS:

03.01 General

The instrumentation & control system equipment shall be adequately designed to monitor and control all significant variables in accordance with the process & operating requirements along with process/ safety interlocks & alarms for abnormal conditions. The system shall be designed to ensure that the accuracy of instruments and the overall system accuracy meet the process requirements.

Design & selection of instrumentation & control system shall take care of the following features as a minimum:

1. Latest state-of art and proven technology.
2. High accuracy, reliable performance, easy expandability, modular design.
3. Standardisation of items & makes for maximizing interchangeability and minimizing inventories.
4. Computer compatibility.
5. Easy maintainability and diagnostic features.
6. Fail-safe features.
7. User friendly testing & calibrating facilities in both local & remote mode.
8. Flexibility for carrying out maintenance work with the process on.
9. Instrumentation system shall be Smart type 4-20 mA, 24 VDC, HART protocol based, as per the requirements indicated in Technical specification alongwith compatible Level-1 Automation System as defined elsewhere in the GTS & in technical specification.
10. Safety to plant equipment and operating personnel.

© 2022 MECON Limited All rights reserved

11. Aesthetically & ergonomically designed control rooms.

12. Provision for future expansion in design & selection, e.g. sizing of final control elements, flow sensors, space inside the control room, space on the panels/cabinets/desks etc.

13. Provision for auto/remote/ manual operation for all automatic control loops.

14. Final control elements/ valves shall be with electric, pneumatic or hydraulic actuators depending on application requirement. These shall be with local valve position indicators.

15. Steam, nitrogen, water or compressed air lines for purging and cleaning purposes, wherever necessary.

16. Configuration of HART based instruments from DCS/PLC & also through hand held configurator.

17. Hand held configurator shall be provided with 32 MB min. memory capacity & device description of all certified devices loaded therein and shall be suitable for the type of Instrumentation System considered in the plant. The configurator shall be supplied with 10 nos. of precision 250 ohm resistances. Hand held configurator shall be suitable as per the area classification of the field instruments for which it is to be used.

18. All recorders shall be 6/12-channel high speed chart-less type with TFT/LED screen and multiple display formats. It shall be possible to download into DCS/ PLC from these recorders. Recorder shall be provided with Ethernet connectivity alongwith applicable software. Recorder shall also have USB port for transporting data by pen drive.

19. All instruments shall have standard ranges. Ranges for indicators shall be selected so that normal value shall be indicated in the middle third of the scale.

20. In hazardous area applications, electronic/electrical instrumentation equipment shall be suitable for hazardous area classification as per IEC. These equipment shall be intrinsically safe conforming to CENELEC standard and certified by appropriate statutory bodies (ATEX,FM, BASEFA etc.). Intrinsically safe systems shall be designed using zener/ IS barriers. Where intrinsically safe design is not feasible, ex-proof equipment/enclosure, certified by statutory bodies like CMRI Dhanbad/ PESO Nagpur shall be supplied. Other acceptable safety procedures (e.g. increased safety procedure, pressurization etc.) shall be used, wherever applicable. Required documentation/certificates shall be submitted in conformance with all such features.

21. All transmitters including PT, DPT, FT, LT, TT, SMART positioners, position transmitters, flowmeters, Level transmitters of all types, etc., shall have inbuilt surge arrester.

22. All transmitters shall have built-in digital output indicators calibrated in engineering unit of flow, pressure, level, temperature, differential pressure etc.

© 2022 MECON Limited All rights reserved

23. Transmitters installed in explosion proof/ hazardous areas shall have dual compartment housing.

24. For slurry density measurement, nucleonic/ non-nucleonic type transmitter shall be used. All statutory requirements for use of nucleonic type instrument shall be arranged.

25. Flow switches shall be generally thermal dispersion type with digital display.

26. Elemental analyser shall be based on PGNAA/ PFTNA technology.

27. Isolator cards shall be provided for isolation / multiplication of 4-20 mA DC instrument signals, wherever necessary.

28. Transmitters installed in the field (outdoor) and also in dusty & harsh indoor environment shall be housed inside the transmitter cabinets.

29. All field-mounted instruments shall be of suitable weatherproof construction, as per details indicated for respective items.

30. Temperature sensors shall be with head, covers & SS chain unless other construction is required as per detailed engineering.

31. Wetted parts of the instrumentation equipment shall be selected so as to withstand physical and chemical properties of the service fluid coming in direct contact with the instrument.

32. Colour codes for cables, lamps, and panels shall be followed for the plant as per industry/plant standard.

33. All the manufactured/fabricated items, cables, cable trays / conduits, impulse pipes & fittings shall be properly painted/ coated/ wrapped/ protected as per requirement & standard practice, depending upon nature of environment in which these are to be installed. Selection of primer and finish paint shall be done as per relevant IS standard or equivalent international / industry standards.

34. All impulse lines & fittings shall be of CS/ SS material. Type of fittings shall be decided as per the requirement indicated in the Technical Specification and/or as per process design during DE stage.

35. Companion flanges, nuts, bolts & gaskets shall be considered for all flanged type instruments.

36. Instruments used on oxygen lines must be oil and grease free and shall be marked ‘for oxygen use’ and colour coded blue.

37. Wherever instrumentation equipment is installed underground, suitable approach, sufficient space for maintenance, drainage, ventilation and illumination shall be provided. For instruments/ tapping points at inaccessible / unapproachable locations, suitable maintenance platforms with railings, stair cases, approach ladders etc. shall be provided or/and remote transmitters/ converters shall be provided at approachable, convenient and safe locations.

© 2022 MECON Limited All rights reserved

38. Continued availability of spare parts & consumables for Instrumentation equipment shall be ensured for a reasonable period of time.

39. In case, instrumentation & control equipment are supplied from foreign sources / manufacturers, care shall be taken to select only those vendors/products who have their own set up or qualified service support in India with ability to provide required technical assistance & after sales service.

40. The supplier shall furnish necessary certification of nucleonic type instruments from statutory bodies, as applicable.

41. The supplier shall make necessary provision of storage and disposal of nucleonic type instruments/ source, including construction of such room meeting AERB guideline.

42. Unit of measurements

    Generally following units shall be used for measurements of different process parameters:

    Pressure: kg/cm^2g or mmWC or bar or Pa or KPa

    Flow: Liquid: m^3/hr.; Gas/Air: Nm^3/hr.; Steam/vapour: T/hr. or kg/hr.

    Level/length: mm or mtr.

    Viscosity (dynamic) : Poise / Centipoise.

    Temperature: ^0C

    Density: Liquid/steam: kg/m^3; Gas/Air: kg/Nm^3

03.02 Temperature Measurements

1. The following types of primary sensing elements shall be used, depending on temperature of process fluid & application requirements:

   i. Pt-Rh 13% / Pt (ISA Type “R”)
   ii. Pt-Rh 10% / Pt (ISA Type “S”)
   iii. Pt-Rh 30% / Pt-Rh 6% (ISA Type “B”)
   iv. Chromel – Alumel (ISA Type “K”)
   v. Nicrosil-Nisil (ISA type N)
   vi. Chromel – Constantan (ISA Type “E”)
   vii. Copper – Constantan (ISA Type “T”)
   viii. Iron – Constantan (ISA Type “J”)
   ix. RTD (Pt 100/ Pt 1000)
   x. Radiation Pyrometers

2. RTD shall generally be used for measurement in the temperature range of -200ºC to 300º C and thermocouples for higher temperatures. Resistance thermometers (RTD) shall be used for cryogenics and low temperature applications, in general.

© 2022 MECON Limited All rights reserved

3. For all control applications, requirements involving duplication of temperature signals and plant specific requirements, temperature transmitters shall be used. Head mounted type transmitters shall not be provided**.**

4. RTDs shall usually be three-wire type. Four-wire type RTDs shall be used, whenever specifically required.

5. For differential temperature measurement by RTDs, Pt-1000 elements shall be used.

6. Pt-100 or Pt-1000 RTDs shall have " $\propto$ " of 0.00385 /ºC.

7. Temperature transmitters or secondary instruments used with thermocouples, shall have automatic cold junction compensation and user selectable high/ low currect output in case of broken sensor. All temperature transmitters shall be HART compatible.

8. All temperature transmitters shall be single channel type.

9. Thermocouples shall normally be mineral insulated (i.e., extruded MgO) type. However, for applications exceeding 1100°C, bead type ceramic insulation shall be provided. Ceramic insulation shall be of recrystallised alumina (Al_2O_3-99.7%) as per DIN VDE 0335.

10. RTD/ Thermocouple assembly shall be spring-loaded to ensure positive contact with thermowell.

11. Measuring junction of thermocouples shall be grounded or insulated depending on the type of electric system or safety protection requirement.

12. Separate conduits or cable entries shall be provided where duplex thermocouples / RTD are used.

13. Thermocouple calibration shall be in accordance with IS, DIN, IPTS or equivalent standard:

14. For thermocouples, linearisation shall be done in temperature transmitter or in DCS/PLC, in case transmitters are not used.

15. Thermowells shall be provided for all applications to enable maintenance work of thermocouple / RTD without affecting production. Thermowells shall be bar stock type for upto 600 mm immersion length and fabricated type for immersion length more than 600mm.

16. AISI 316 shall be used as thermo well material, unless other special material is required due to process fluid and conditions. For temperature range between 800°C – 1100°C, Inconel 600 shall be used as thermo well material. For temperature more than 1100°C, ceramic thermo well shall be used. Ceramic material shall be selected based on the process environment.

17. Any pipe of less than 4" nominal diameter, shall be expanded to 4" size to install thermowell.

© 2022 MECON Limited All rights reserved

18. Thermocouples shall be complete with compensating leads, installation fittings. The indicators, controllers shall have broken sensor protection.

19. Interconnections to / from thermocouples to temperature transmitters/ automation systems shall be made via compensating cables of thermoelectric characteristics matching with thermocouples.

20. Bimetallic type thermometers having minimum dial size Φ150mm shall be used for local indication of temperature. Temperature gauges with smaller dial sizes may be used for machine mounted applications.

21. For bimetal type thermometers, external dial reset facility shall be provided for zero adjustment.

22. Mercury filled type temperature gauges shall be avoided except where gauges with remote **c**apillary tubes are required.

23. The temperature gauges shall be designed in accordance with ASME B40.200/ BS 5235/EN 13190 or other international standards.

24. In case, temperature elements, extension cables, compensating leads are to be laid on the top of furnace /hot surface, suitable heat insulation protection shall be provided. Use of asbestos shall be avoided. Mineral insulated cables shall also be used for such applications.

25. JB for connecting compensating cables shall have terminal blocks suitable for type of thermocouples to be connected.

26. A protection tube consisting of a gas-tight ceramic sheath, preferably reinforced with stainless steel, shall be provided with Pt-Rh/Pt thermocouples, unless some other special construction is specified.

27. Radiation pyrometers shall be used when:
    a. Measured temperature is beyond the practical operating range of thermocouples.
    b. Environment will contaminate or seriously limit the life of the thermocouples.
    c. Target is not easily accessible.
    d. Average temperature of a large area is to be measured.
    e. For moving objects.

28. Radiation pyrometers shall be provided with scavenging air or nitrogen to keep their lens clean. Pyrometers shall be either water-cooled or air-cooled to meet application requirements. Water/air cooling facilities shall be provided with flow switches for sensing of low flow conditions as well as automatic isolation of pyrometers, in case of failure of cooling media.

29. Isolation valves shall be provided before radiation pyrometer for on-line maintenance of radiation pyrometer.

© 2022 MECON Limited All rights reserved

30. Two-colour Ratio pyrometers shall be provided for small objects and where interference of materials such as steam, dust etc. are present in the line of sight/ area in view and also depending on temperature range.

03.03 Molten Metal Temperature Measurement

1. For molten metal temperature measurement, disposable type immersion thermocouples having response time of less than 3 seconds shall be used. The corresponding temperature measurement system shall be complete with lance assembly, adapter, disposable thermocouple cartridge and two-way connector for the lance.

   For molten metal temperature measurement, suitable pyrometers can also be used with proper installation & location of measurement, protection facilities, purging facilities and based on the designers past experience for a particular application.

2. For immersion type hot metal / steel temperature measurement, shielded flame proof and heat resistant compensating cables shall be provided.

3. Temperature measurement system shall be microprocessor based.

4. Linearisation for B, R & S type thermocouples shall be done in microprocessor based temperature measurement system.

5. 4–20 mA analog output as well as digital communication for the measured temperature shall be provided for interfacing with automation system.

6. 4-½ digit type digital indication shall be provided in the temperature measurement system panel. This digital indicator shall retain the last value until the next measurement cycle is initiated by inserting the thermocouple probe in the lance.

7. Printout of measured temperature along with corresponding heat no. shall be available from automation system.

8. Ready, measurement and measurement complete/ probe open signals shall be displayed in the measurement system panel with green, yellow and red LED indication.

9. In the field, one local control box, 200 mm (minimum) jumbo display for temperature indication and red, yellow & green traffic lights for ‘measurement complete/ probe open signal, measurement and ready’ status display shall be provided. Measurement complete/ probe open shall also be indicated by blowing horn.

10. Power isolation switch at local control box end shall be provided.

11. 24 V DC signals and 230 V AC signals shall be segregated in the local control box and microprocessor based temperature measurement system panel.

12. Non-splash type temperature tips/ elements shall be used.

13.

© 2022 MECON Limited All rights reserved

03.04 Flow measurement

03.04.01 **For Fluids:**

1. Normally orifice plates, magnetic flow meters or vortex flow meters shall be used for flow measurement of industrial service fluids, depending on the merit of the application.
   Positive displacement, turbine and Coriolis flow meters shall be used in custody transfer measurements and in processes, where high measurement accuracy is required.
   However, other types of flow meters e.g. ultrasonic, microwave, nucleonic, thermal type etc. may also be used when necessitated by particular technical requirements.

2. Vortex flow meters shall be generally used for steam/inert gas service for line sizes of >2" and ≤ 8".

3. Magnetic flow meters shall be generally used for water & other liquids having conductivity greater than 5 μS/cm.

4. Coriolis type mass flow meter shall be used for all viscous materials (tar, pitch etc.) and for inert gas (argon, nitrogen etc.) applications of line sizes ≤ 2".

03.04.02 **Differential pressure type devices**

1. Normally, concentric square-edge type orifice plates shall be used.

2. For sizing calculation latest edition of BS 1042/ EN ISO 5167-1 standard - Measurement of fluid flow in closed conduits shall be followed.

3. For better accuracy, the Beta (β) ratio of concentric type orifice plates shall preferably between 0.5 to 0.6 and shall not exceed 0.7.

4. Minimum thickness of concentric square-edge type orifice plate shall be as follows:-

2" to 12" (i.e., 50 to 300 mm)	3.18 mm
Above 12" & upto 36"	6.35 mm
Above 36" & up to 80"	10.0 mm
Above 80"	12.0 mm
For temperature >316°C	
2" to 8" (50 to 200 mm)	3.18 mm
10" & above	6.35 mm

5. Quarter-circle and conical entrance type orifice plates shall be used for viscous fluids.

6. Eccentric or segmental type orifice plates shall be used with dirty fluids.

7. Flow nozzle, venturi or averaging pitot tube may be used in high flow applications or where the allowable pressure-drop is low. Averaging pitot tube shall only be used for clean fluid.

© 2022 MECON Limited All rights reserved

8. All orifice plates shall normally be made of AISI 316 material, unless otherwise called for by process requirement.

9. Generally flange tappings shall be used. However, corner or D & D/2 type tappings can be used as per requirement.

10. For line sizes between 1” to 2”, carrier-ring type orifice plate with corner tapping shall be used.

11. For line sizes less than 1”, integral orifice plate shall be used.

12. For line sizes greater than 2”, orifice plate with flange tapping shall be used.

13. In dirty/ contaminated process lines or process lines where line pressure is low (in mm WC range) & line size is large, D & D/2 tappings shall be used. For dirty/ contaminated gas applications, if required, continuous N2/ compressed air purging through rotameters and/ or intermittent purging through remote operated solenoid valve in each impulse line shall be provided.

14. For low pressure applications, piezometric ring arrangement shall be provided at both the tappings.

15. All orifice plates shall be fabricated with a collar, which shall extend outside the mounting flange.

16. Tag no., orifice plate bore diameter, upstream (+) and downstream (-) side marking, and plate material shall be engraved on the handle of the orifice plate.

17. Flanges shall be in accordance with ANSI B16.36 and of minimum Class 300 rating for line size greater than 2 “ and upto 8”. For line size upto 2 “, flanges shall be in accordance with ANSI B 16.5 of 300# rating. For line sizes above 8” and upto 24”, flanges in accordance with ANSI B16.5, and of minimum class 150 rating depending on process pressure, shall be used. For line size more than 24”, flanges in accordance with IS 6392 and of suitable rating, shall be used.

18. Tag no., flange size, flange rating and flange material shall be engraved on all flanges.

19. Gasket material for orifice plates shall be suitable to withstand physical and chemical properties of process fluid and shall be matched with the pipeline standard, as required. For steam application, SS spiral wound & compressed asbestos filled type gasket shall be used.

20. Supply of orifice plate assembly shall include the orifice plate, flanges, stud-bolts, nuts, jackscrews, gaskets, pressure tapping nozzles and plugs.

21. Drain / vent hole correction shall be as per ISA RP 3.2.

22. Orifice plate or flow nozzle shall be installed as per standard, but not less than with straight pipe lengths of 10 times pipe internal dia. (10 D) on the up-stream and 5 D on the downstream, free from bends, tees, branch pipes and control valves, etc.

© 2022 MECON Limited All rights reserved

23. Control valves shall be installed after the orifice plates in the direction of flow.

24. In the installation circuit, suitable drainage arrangement with isolation valve shall be provided. For oxygen service, poisonous/ explosive fluids suitable safety precautions shall be provided in the installation circuit.

25. Corrosive media shall be separated from transmitters by separating chambers with valves for isolation.

26. For steam flow and flow of liquid at temperature greater than 120°C condensation chambers of identical dimensions shall be used. Condensation chambers shall be installed as near to flow sensor as possible. For congealing service, seal pot arrangement shall be provided.

27. For slurries, viscous and corrosive liquids, 1.5”/2” size D & D/2 tappings with remote diaphragm seal type transmitters shall be used.

28. Depending on specific requirements/applications, averaging pitot tubes with multi-holes (eg, Annubar type) placed in the direction of fluid stream may also be used. The calculations and design shall be as per manufacturer’s standard.

29. IBR certification shall be provided for steam applications, as per IBR standard.

30. Generally, metal tube type rotameters shall be used. Glass-tube enclosed type rotameters may be used up to 3 kg/cm^2 process pressure, if the process fluid is air, inert gas or water.

31. For on-line rotameters, by-pass process line shall be provided with isolation & bypass valves.

32. For line size greater than 2”, bypass type rotameters shall be used, instead of on-line mounted type rotameters.

03.04.03 **<u>For solids:</u>**

1. Generally, flow measurement of solids in powdered, amorphous or granular form shall be done using ultrasonic type sensors or microwave type sensors, depending on the merit of the application.

2. For measurement of mass flow of suspended solids in liquids or slurries, nucleonic type instruments shall be used.

03.04.04 **<u>Vortex flowmeters</u>**:

For selection of vortex flow meters, following to be taken into account: -

1. Reynold’s no. shall be at least 20000 and minimum flow velocity shall be as specified by manufacturer.

2. Vortex flow meters shall not be considered in wet gas application.

3. Vortex flow meters shall not be considered for viscous, waxy or erosive services.

© 2022 MECON Limited All rights reserved

4. For gas application, the bluff body shall be in horizontal position to avoid condensate and for liquids in vertical lines the flow shall be upwards to keep the line full.

5. A location with minimum pipe vibration shall be selected. The pipe shall be supported at both ends, as necessary.

6. If pressure and temperature compensation are required for gas flow application, the pressure tapping shall be placed as close as possible to upstream of flow meter. The temperature tapping point shall be located at least 5D on the downstream of flow meter.

7. Straight length requirement shall be as specified by manufacturer. If meter size is smaller than the line size, concentric pipe reducers shall be used. Eccentric reducers shall not be used as they disturb the flow profile.

8. All vortex flow meter shall be field bus based or SMART type with HART protocol. Local display of vortex flow meters shall be calibrated in engineering unit. For gaseous application, pressure & temperature compensation can be done in automation system.

9. For flow meter sizes of less than the process line sizes, suitable reducer vortex (expander/ reducer integral to the flow meter) shall be generally used.

10. Accuracy of the vortex flow meter shall be ± 1% or better.

11. Sensing technique of the vortex flow meter shall not be thermistor based.

12. Enclosure class of vortex flow meter shall be minimum IP 66.

03.04.05 **Electro - magnetic flow meters:**

Selection of Electromagnetic flow meters, shall be decided based on the following:

1. All electro-magnetic flow meters shall be field bus based or SMART type with HART protocol.

2. Liner material shall be selected based on service. For normal application, PTFE liner material shall be used. For slurry applications, suitable liner material shall be selected by manufacturer with proper justification.

3. If gases are entrained in the liquid, meter shall be installed in vertical process line. While installation it shall be ensured that flow tube is always completely filled with liquid.

4. Straight length requirement of minimum 5 D in the upstream and 3 D in the downstream shall be provided for water services. However, for other services it shall be designed as per manufacturer's recommendation.

© 2022 MECON Limited All rights reserved

5. Installation of electromagnetic flow meters shall be avoided near large conducting surface e.g. metal surfaces. (Large surface may interfere with magnetic field of instrument thus affecting accuracy).

6. Pulsed DC excitation or dual frequency shall be provided for field excitation of Electro-magnetic flow meter. For slurry application, high excitation value shall be used depending on requirement. Power & signal circuits of electro-magnetic flow meter shall be completely isolated from each other.

7. Minimum one no. of grounding ring/electrode for metallic pipelines and two nos. of grounding rings/electrodes for non-metallic pipelines shall be provided for installing the electro-magnetic flow meters.

8. Selection and sizing of electro-magnetic flow meters flow characteristics published by the manufacturers shall be followed. Allowable flow velocity shall be considered based on the specific merit of the service, allowable pressure drop, cost effectiveness and as per manufacturers recommendation. However, 2 to 3 meter/ sec flow velocity or as recommended by manufacturer shall be considered for optimum results.

9. In case tube sizes are lower than the process pipelines reducers and expanders constructed preferably from the same as pipeline material shall be used. Such reducers and expanders shall be designed with 8(eight) degree downward and 5(five) degree upward angle respectively.

10. Accuracy of electro-magnetic flow meter shall be ± 0.5 % or better unless otherwise specified in the technical specification. However, for matched pair applications, accuracy of atleast ± 0.2 % or better shall be considered. Local display shall be calibrated in engineering unit.

11. For contaminated water services and slurry services, electro-magnetic flow meters shall be installed with bypass arrangement along with bypass & isolation valves, unless otherwise stated.

12. Separate sensor & transmitter type electro-magnetic flow meters shall be provided if required as per the system design.

13. Electro-magnetic flow meter shall be provided with built-in auto zero facility for ensuring stable zero point.

14. Separate earth pit shall be provided exclusively for earthing of electro-magnetic flow meters, if recommended by manufacturer. Preparation of such earth pits shall be governed by the general methodology as described in IS: 3043, 1987 or relevant international standards.

15. Simulator for electromagnetic flow meters shall be supplied wherever quantity of electromagnetic flow meters is more than 10 or wherever, specified in Technical specification.

16. Enclosure class of electro-magnetic flow meters shall be minimum IP 66.

03.04.06 **Coriolis mass flow meters:**

For selection and sizing of coriolis type flow meters, following shall be taken into account:

© 2022 MECON Limited All rights reserved

1. If required flow rate cannot be handled by one meter, two or more meters can be used in parallel.
2. Selection of wetted part materials shall be carefully chosen to suit process fluid.
3. SS tubes shall not be used for liquids containing Halogen. Hastelloy tubes shall be used for all application containing Halogen.
4. Coriolis mass flow meters shall not be used in two-phase fluid application.
5. Pressure drop across flow meter shall be selected, ensuring no cavitation occur under any process condition.
6. For congealing service, steam jacketing shall be provided for the sensor tube to avoid jamming inside flow tube in case of zero flow.
7. Flow meter support shall be as per manufacturer's recommendation.

03.04.07 **Ultrasonic flow meters:**

For selection of Ultrasonic flow meters, following to be taken into account:

1. For fluids containing suspended particles, ultrasonic flow meters, working on Doppler effect principle shall be used. For clean fluid application, transit time type ultrasonic flow meters shall be used.
2. Ultrasonic flow meters shall be used where allowable pressure drop is minimum.
3. On critical services Ultrasonic flow meters with insertion probes shall have retraction mechanisms to allow on stream maintenance.
4. Clamp on type shall be used only for liquid metering in low accuracy application.

03.04.08 **Turbine flow meters.**

1. Turbine meters for custody transfer shall have two pick-up coils for use with an electronic pulse integrity input circuit in read out system.
2. Turbine type meters shall have flanged connections
3. Turbine flow meter shall be used for clean fluid applications.
4. Strainers shall be provided immediately upstream of turbine meters
5. In liquid service, adequate filtering and degassing shall be provided.

03.04.09 **PD meters :**

1. Positive displacement type meters shall have flanged connections.
2. PD meters shall not be selected for use in non-lubricating liquids e.g. LPG.
3. Strainers shall be provided immediately upstream of PD meters.
4. In liquid service, adequate filtering and degassing shall be provided.

© 2022 MECON Limited All rights reserved

03.05 Pressure measurement :

1. Either bourdon tube (spiral or helical), bellows or diaphragm type sensing element shall be used in pressure gauges/ switches, depending on the process service.

2. The pressure gauges shall be designed in accordance with IS: 3624, 1987 or BS EN 837 or ASME B40.100.

3. For Bourdon type pressure gauge accuracy shall be ±1.0% and for diaphragm & capsule type pressure gauge accuracy shall be ±1.6%. Accuracy shall include the combined effect of linearity, hysterisis and repeatability.

4. The element and other wetted part materials of pressure gauges/ switches shall be of AISI 316, unless process media necessitates use of other materials.

5. Movement material of gauges shall be of AISI 304. Outer casing and bezel material shall be made of stainless steel.

6. Pressure gauges shall have suitable zero adjustment facility and minimum IP55 housing.

7. The sensing element of pressure gauges/ switches shall withstand the specified over-pressure (i.e., at least 125% of span) for at least 30 minutes, without affecting their elastic characteristics.

8. Pressure gauges shall have dial size of 150 mm diameter. Gauges of smaller dial size may be used for machine mounted applications. Pressure gauges shall have ½” NPT thread in general.

9. Pressure gauges/ switches used in pulsating pressure applications (e.g. delivery side of pumps, compressors, etc.) shall be provided with externally adjustable pulsation dampener or snubber. For machine mounted applications or in case of mechanical vibration at mounting location, either liquid (glycerine) filled gauges shall be used or standard gauges mounted away from tapping point on gauge board shall be used.

10. For steam & vapour applications, pressure gauges/ switches shall be equipped with pigtail syphon of the same material and schedule as the process pipeline. For hot gas & liquid applications, impulse pipe length shall be such that the temperature at gauge end is within its design limit.

11. Wherever the process pressure exceeds 50 kg/cm^2, solid front type pressure gauges shall be used (i.e., a metal partition shall be provided between dial and element).

12. Window material of the pressure gauge shall be of shatterproof glass.

13. For pressure measurement in slurries, viscous and corrosive fluids, diaphragm seals of suitable material shall be provided along with pressure sensing devices. Diaphragm seals shall be integral with the gauges /switches, unless otherwise specified.

14. The sealing liquid for diaphragm seal shall be an inert liquid compatible with process fluid and its temperature.

© 2022 MECON Limited All rights reserved

15. Depending on process application, suitable chemical seal along with capillary of required length shall be provided

16. Diaphragm seal type pressure gauges / switches used in applications where the temperature exceeds 100°C, shall have bourdon / bellows type element. The bourdon / bellows shall be selected to withstand temperature upto 200°C.

17. However, in vacuum service, if the temperature exceeds 200°C, diaphragm seal shall not be used.

18. The working range of pressure switches shall be selected in such a way that the set pressure is between 35% and 65% of the range.

19. The switch enclosure shall be weatherproof to IP 65. Additionally, in hazardous areas, switch enclosure shall be explosion-proof conforming to IS: 2148: 2004 /IEC 60079-1 : 2001 and suiting to the area-classification of the hazardous area.

20. Dry contact type micro switches with minimum rating of 240V AC,5A / 110VDC, 0.4A shall be used for pressure switches in non-hazardous area applications.

21. In hazardous areas, hermetically sealed micro switches with minimum rating of 240 VAC, 5A / 110VDC, 0.25A shall be used.

22. Pressure switches shall have repeatability of at least ± 1% of span.

23. Accuracy of DP gauges shall be ± 1.5% of span or better.

24. Pressure gauges shall be supplied with three-way gauge cock with plug. DP gauges shall be supplied with 3-valve manifolds of AISI 316 material of suitable pressure and temperature rating. The above items shall be in addition to the process isolation valves/ root valves at the process tapping point.

03.05.01 **Transmitters**

1. Pressure, flow, differential pressure and level transmitters shall be rugged, industrial, microprocessor based ‘Smart’ type. Transmitters shall work on 24 V DC power supply having 2-wire, 4-20 mA DC output & ‘HART’ protocol based digital communication.

2. Accuracy of all transmitters shall typically be 0.075% or better. Accuracy shall include the combined effects of linearity, hysterisis and repeatability. In any application, the worst case error (WCE) consisting of static pressure effect, temperature effect, humidity effect and stability (1 year) shall not be greater than 0.75%, unless specified otherwise. Zero and span adjustments shall be non-interacting to each other.

3. Transmitters shall be able to withstand a minimum over pressure of 150 % of the rated pressure.

4. All the transmitters shall be weather-proof to IP-65 or better.

© 2022 MECON Limited All rights reserved

5. Zero suppression & elevation features, surge protection and provision for selection of different damping levels shall be provided in each transmitter.

6. All transmitters shall have integral local linear digital indicators calibrated in engineering unit. DP transmitters for flow applications shall have built-in square root extractors. Local indications shall be adjusted / calibrated through hand held calibrator.

7. Pressure transmitters shall be supplied with 2-valve manifolds of AISI 316 material. Flow; DP and level transmitters shall be supplied with 3-valve manifolds of AISI 316 material having suitable pressure and temperature rating. Standard zero suppression/ elevation facilities and output reversal facility shall be available for all transmitters. All the required accessories for mounting shall also be supplied with the transmitters. However, for purging requirement, pressure transmitter shall be supplied with 2-valve (3 way) manifold and DP type transmitter shall be supplied with 3-valve (5 way) manifold.

8. For corrosive atmosphere, transmitter body, mounting accessories, nuts & bolts etc. shall be of stainless steel.

03.06 Level Measurement

03.06.01 General

Selection of primary elements shall be based on the service conditions. A general guideline is given below. However, selection of particular type of sensor shall be decided on the basis of application requirement.

1. <u>For Liquid Service</u>

   i) Pressure / differential pressure type level transmitter with/without diaphragm seals
   ii) Float or Displacer type level transmitters
   iii) Ultrasonic type
   iv) Radar type
   v) Vibrating fork type
   vi) Gauge glasses
   vii) Magnetic level gauges
   viii) Capacitance type
   ix) Conductivity type
   x) RF Type
   xi) Time domain reflectometry type

2. <u>For Solid Service</u>

   i) Ultrasonic
   ii) Nucleonic
   iii) Load Cell (weighing) system

© 2022 MECON Limited All rights reserved

iv) Electromechanical servo gauges
v) Tilt switches
vi) Capacitance switches
vii) Vibration rod
viii) RF Type
ix) Time domain reflectometry type
x) Laser based

3. For sumps
   i) Conductivity switches
   ii) Capacitance switches
   iii) Bubbler Tube System
   iv) Rope & float type
   v) Ultrasonic

4. Tank gauging
   i) Servo gauges
   ii) Radar

5. Level instruments shall have weatherproof, dust and corrosion resistant enclosures of minimum IP-65 grade.
6. Additionally, explosion-proof enclosures shall be provided for hazardous area applications.
7. In Tank Gauging applications, communication port shall be provided in level instruments, for connectivity to a computer.
8. Use of Nucleonic and tilt switches shall be avoided, as far as possible.
9. For bunker level measurement of solids, no. of sensors shall be decided based on bunker size, bunker profile, feeding & discharge points and material profile.
10. For level measurement with high accuracy, multi variable type level instruments shall be used.
11. Lap top based configurator along with required connectors, cables, software etc. for radar or ultrasonic type level instruments shall be supplied wherever separately specified in the Technical Specification.

03.06.02 Gauge Glasses

1. All gauge glasses shall normally be steel armoured reflex or transparent type. Magnetic level gauges may also be used when liquid temperature permits and liquid specific gravity is greater than 0.9.

2. Reflex gauges shall be used on clean, clear, non-corrosive liquids.

3. Transparent gauges shall be used for the following applications:
   - interface service
   - when the process is dirty or viscous

© 2022 MECON Limited All rights reserved

4. For corrosive medium, (such as caustic, hydrofluoric acid and steam applications above 250 PSIG), transparent gauge glasses shall be used with internal mica or plastic shield to prevent chemical attack or discoloration of the glass.

5. If the process is a solvent that can dissolve the internal coating of the chamber of the reflex gauge, thereby reducing the effectiveness of the prisms, reflex gauges shall not be used.

6. Reflex gauge glasses shall not be shielded.

7. Transparent level gauges, in general, shall be equipped with minimum 40 W illumination and switch (ex-proof for hazardous area).

8. For high temperature applications, level gauges with flexible end tube coupling or expansion loops (top/bottom) shall be used to take care of high temperature expansion.

9. Large chamber type gauge glasses shall be used for boiling / evaporating and heavy viscous liquids. Also steam jacketing shall be used for congealing service.

10. Gauge glass material shall be toughened borosilicate glass having adequate resistance to thermal and mechanical shock.

11. Gauge glass body and cover shall be made of carbon steel with rustproof finish, unless otherwise specified.

12. Gauges shall be provided with safety ball check offset type gauge cocks, vent and drain connection (with 1/2” vent & drain valves), nipples, caps etc.

13. Gauge glasses shall be provided with top and bottom or side connections. Where side connections are specified, the gauge glasses shall have two connections at each end, 180° apart, with one connection at each end plugged.

14. Unless otherwise specified, gauge cocks shall be of the quick-closing type with bolted bonnet, outside screw and renewable seats.

03.06.03 **Displacer & Differential Pressure type**

1. External displacer type instruments with ratable head shall usually be used for level measurement upto 1200 mm (48”), wherever process permits.

2. Displacers shall be made of AISI 316 with Inconel torque tube, unless otherwise specified or unless the process calls for any special material.

3. Side-side flange connection shall normally be used. Heat insulator / finned extension shall be used for temperatures above 230°C.

4. All such instruments shall have drain valves and vent plugs.

5. Stilling wells shall be provided for internal displacer type level instruments.

© 2022 MECON Limited All rights reserved

6. Differential pressure transmitter shall be used for level measurement in boiler drums and in other cases, where displacer type instruments are not suitable (e.g. level measurement beyond 1200 mm, applications requiring purge or where liquid might boil in external portion).

03.06.04 **Vibration fork type**

Vibration fork type level switches shall be either external cage type construction or shall be standpipe mounted type. Process connection to the cage shall be 1“ socket weld type, unless otherwise specified.

03.06.05 **Ultrasonic type**

1. Ultrasonic type level transmitters shall be microprocessor based and shall use digital signal processing technique for signal conditioning. For bunker/ silo level measurement, separate sensor & transmitter shall be used with transmitter mounted at suitable location.

2. Suitable protection box for mounting ultrasonic type level transmitters shall be provided for mechanical protection & dust. Swiveling arrangement shall be provided for proper aiming/ focusing of ultrasonic type level transmitters for big bunker/ silo level measurement.

3. Transmitter/ control unit shall be single channel type.

4. The transmitter shall have facilities for storing the echo profile, manipulation of the echo profile to remove noise, multiple profile-averaging etc. as required.

5. The transmitter shall have the capability to use statistical filtering techniques, wherever required, to compensate for rotating agitator blades or to suppress false signal due to heavy dust or fill-stream interference.

6. In very dusty applications or in silo / bunker, etc. filling applications, high power and long range (i.e., low frequency) transducer shall be used to overcome the detrimental effect of the dust. This type of instrument shall not be used for level measurement in process medium consisting of particles of sizes (- 6 mm diameter).

7. The sensor shall have inbuilt temperature sensor for ambient temperature compensation.

8. Chemical compatibility of the sensor material with the process material shall be ensured, to avoid corrosion.

9. In applications, where material build-up on the sensor is expected, the transducer shall have suitable build up compensation (i.e. repetitive, pulsating displacement at its face to remove the material build up). This software can be available in transmitter/control unit or can be loaded in automation system for which two-way digital communication shall be provided between transmitter & automation system or separate calibration equipment shall be supplied along with accessories.

10. Provision for the nitrogen/compressed air purging facility in the ultrasonic level sensor shall be provided for cleaning the build-up of the material.

© 2022 MECON Limited All rights reserved

03.06.06 **Nucleonic type**

To the extent possible use of Nucleonic type sensors shall be totally avoided unless alternative source of measuring instrument is not available at all. However the following shall be noted for Nucleonic type instruments:

1. Nucleonic sources shall have adequate shielding to limit radiation level at any point on the surface to below 6 milli-Roentgen per hour. At the same time, nucleonic type measurement systems shall not be excessively bulky or heavy.

2. Nucleonic sources shall have facilities for complete shielding during shipping, storage and transportation (in the form of rotary shutter, etc.).

03.06.07 **Capacitance & conductivity type**

1. Capacitance / conductivity type probes shall be as follows:

   - Rod type : for lengths up to 2000 mm.
   - Rope type with gravity weight : for length exceeding 2000 mm.

2. For level measurement in non-conducting tanks or sumps or when the tank profile is non-linear, capacitance type instruments shall be provided with a reference electrode / ground probe.

3. Capacitance type level probes may be used for both switching as well as for continuous level measurement in liquids.

4. Capacitance type level probe shall not be used for level measurement in solids when there is likelihood of material build-up on the probe. Capacitance type level probe shall not be used in liquid service where there is a chance of di-electric value change (due to oil spillage etc.).

03.06.08 **Radar Type**

1. 2 wire, Non- contact Radar type level instrument shall be used when the physical properties of the medium between the sensor and the measured interface may vary. 4-wire type shall be considered only when necessary.

2. The Radar type level instrument shall be microprocessor based with HART protocol or field bus based.

3. Suitable antennae shall be considered for the intended application.

4. Radar type level transmitter shall have facilities for storing echo profile, manipulation of the echo profile to remove noise, multiple profile-averaging etc.

5. The transmitter shall have the capability to use statistical filtering techniques, wherever required, to compensate for rotating agitator blades or to suppress false signal due to heavy dust or fill-stream interference.

6. Transmitter/ control unit shall be single channel type.

© 2022 MECON Limited All rights reserved

7. The sensor shall have inbuilt temperature sensor for ambient temperature compensation.

8. Chemical compatibility of the sensor material with the process material shall be ensured, to avoid corrosion.

9. In applications, where material build-up on the sensor is expected, the transducer shall have suitable build-up compensation (i.e. repetitive, pulsating displacement at its face shall be used to remove the material build-up).

10. Suitable protection box for mounting radar type level transmitters shall be provided for mechanical protection & dust. Swiveling arrangement shall be provided for proper aiming / focusing of radar type level transmitters for solid level measurement in big bunkers/ silos.

11. Provision for the nitrogen/ compressed air purging facility in the level sensor shall be provided for cleaning the build up of the material in antenna in case of dusty service.

03.06.09 **Time domain reflectometry type (TDR)**

1. TDR type level measuring system shall be mainly used.

   a) For level measurement of Liquids, interface in immiscible fluids, granules & fine powders

   b) For medium having dielectric within 1.8 to 100.

2. Co-axial type, twin rods, twin cables, single cable / rod type probes shall be selected depending on tank height, properties of medium/media & application.

3. For interface level measurement top layer shall be of lower dielectric and minimum difference of dielectric between top & bottom layer shall be as per manufacturer's recommendation

4. For adhesive/sticky in nature materials, coated probes as per manufacturer's recommendation shall be used.

03.06.10 **Radio frequency (RF) type**

1. Radio frequency (RF) continuous/ point level measuring system, based on capacitance or admittance shall be used for level measurement of liquids, slurries, granulars, and liquid-liquid interface.

2. RF transmitter shall be

   a) Smart type

   b) Self-calibrating type i.e. as the level rises in the vessel, the span is set automatically and electronically by the smart transmitter.

3. For high temperature application, remote mounted transmitters shall be used.

© 2022 MECON Limited All rights reserved

4. RF type shall also be used for detection of absence or presence of liquids, slurries, interfaces and granules.

5. Hand-held calibrator with rechargeable battery and battery-charger shall be provided.

6. It shall be possible to calibrate RF transmitters using calculated or known levels of capacitance directly entered by the hand held calibrator.

03.06.11 **Others**

Tilt Type, paddle type, bubbler type, electromechanical type, etc. level instruments may also be used, depending on application specific requirement.

03.06.12 **Vibration Monitoring System**

1. Continuous on-line vibration monitoring system for X and Y directions shall be provided for HT motors, pumps, fans, drives, etc., as per the requirement specified in the technical specification.

2. Vibration Monitoring System (VMS) shall consist of the following items as a minimum:

   a. Vibration Sensors
   b. Vibration transmitters with 4-20 mA DC output.
   c. Cables, conduits & junction boxes.
   d. Mounting Pads for sensors.
   e. The above items are indicative only. Over and above any items & accessories, if required, for completeness of vibration monitoring system shall be supplied, even if it is not specifically indicated in this specification.

Vibration Sensors

1. Vibration sensors shall be piezoelectric accelerometer type or piezoelectric velocity type. The selection of sensor shall depend on each specific application. Vendor shall review the equipment to be monitored and furnish their recommendation regarding selection of sensor for client/ consultant's approval.

2. Two vibration sensors shall be provided for each bearing measurement location (one for horizontal (X) & one for vertical (Y) direction).

3. For bearings of high speed machines (= / >1500 rpm) accelerometer type sensor and for low speed machines (<1500 rpm) velocity type sensor shall be provided in general.

4. Vibration sensor shall be complete with all required pre-amplifier/ driver/ charge amplifier as necessary for proper operation of the vibration monitoring system. The electronics shall be housed in a separate field mounted box located near the bearing housing/ point of measurement. The sensor and the housing for the field mounted electronics shall have protection class of IP-65 and shall be suitable for operating in

© 2022 MECON Limited All rights reserved

the environmental conditions of the plant. Sensors and extension cables shall be suitable for operating temperature of 0-125 °C.

03.07 Density Measurement

1. Following types of density meters shall be used based on process fluid and application requirements:
   i. Nucleonic type
   ii. Ultrasonic type
2. For nucleonic type density meter, type of detector shall be selected to suit the application and source strength.
3. The density meter shall include a source with housing, detector with housing control unit and mounting hardware.
4. The radiation source shall be of sufficient intensity to provide an accurate signal and response to meet the particular process and piping requirements. The nuclear source head shall meet the personnel safety requirements of the Nuclear Regulatory Commission (NRC).
5. The radiation port of the source head shall have a manually operated mechanical shutter with lock and key that can be opened and closed without removing the source head. The shutter shall have a locking device to accommodate a padlock and to permit locking in the closed position with visible indication of shutter position.
6. Type of detector shall be selected to suit the application and source strength.
7. Nucleonic Density meter shall be absolutely safe and reliable. The radiation source shall be safely double encapsulated in a stainless steel with lead lining capsule so that no radioactive material can escape from the protective source container.
8. In addition, independent security systems shall be included to ensure that gamma radiation is only released from the source container when the measurement chamber is closed and that the source containers are always locked and remains locked while the chamber is open. This must not only be guaranteed under regular operating conditions, but also in the case of false operation and power loss.
9. The Ultrasonic sensor shall be insensitive to gas bubbles and transmitters shall be microprocessor based and shall use digital signal processing technique for signal conditioning.
10. The Ultrasonic controller shall have data storage facility.
11. The Density meter shall be capable of temperature compensation automatically by utilizing temperature sensor signal and in addition manually by entering temperature value via keyboard entry.
12. The controller shall be SMART microprocessor based and have provision of all required data of the tested part like material composition, absorption coefficients, temperature compensation, selection of aperture and radiation source, measuring

© 2022 MECON Limited All rights reserved

times and tolerances of the compact density are pre-adjusted and recorded by the controller.

13. The Control unit transmitter shall be capable of processing gauge head signals, temperature input, flow rate input. It shall have totalized display and individual parameters display of selected variables.

14. All equipment necessary for standardization and calibration shall be provided.

15. The detector and the transmitter shall have IP65 or better enclosures.

16. The transmitter shall be suitable for surface mounting, with access to all terminals from the front. Any required signal converter shall be within the transmitter enclosure.

17. The density devices and all associated equipments shall be as per manufacturer's standard, heavy-duty design, as required for the application specified herein.

18. Provision for the nitrogen/ compressed air purging facility in the sensor shall be provided for cleaning the build-up of the material.

04. GAS ANALYSIS SYSTEM

The gas analysis system shall be complete with the following units:

1. Gas sampling probe, complete with filters, isolation valves, ring heaters, insulator jackets etc, as required. Dual probes shall be used, for all waste gas application. Redundant sample lines from point of tapping to analyser including redundant suction pumps, sample gas coolers, peristaltic pumps, filters etc. shall be provided.

2. Heated seamless sample lines shall be provided. Heating temperature control technology shall be as finalized during detail engineering stage.

3. The sampling probe assembly shall be sourced from the OEM supplier. All items & components of the sampling system shall be from reputed manufacturers, acceptable for the applications.

4. Gas preparation & conditioning system including sample conditioning, pumping, cooling, cleaning, drying etc. as applicable along with filter panels, scavenging panels complete with valves, tubing, fittings, accessories etc, as required.

5. Gas analyzer panel with analyzer instruments, monitoring devices viz, flow, pressure, temperature etc, tubing, fittings, accessories, as required.

6. UPS & non-UPS type electrical power supply for the complete gas analysis system, Circuit breakers, MCBs, relays, 24 V DC regulated power supply units, earthing system etc, as required for efficient performance of the analyzer system.

7. Calibration equipment with calibration gas cylinders. Facility for both automatic & manual mode of calibration shall be provided. Cross sensitivity correction shall be provided, wherever applicable.

© 2022 MECON Limited All rights reserved

8. All the features as per the latest CPCB guidelines shall be complied with & provided for all the analysers related to emission monitoring system.

9. Suitable display unit with key-board/ switches shall be provided on the analyzer panel front for monitoring & display of different parameters, status of analyser & sample conditioning equipment etc.

10. Before the filter unit, SS isolation valves shall be provided for each probe to facilitate online changing of the filter unit. Sample gas coolers shall be provided with redundant sample gas path & peristaltic pumps.

11. Sampling of dusty, hot, dry, cold or wet gases shall be done using dual probes with automatic switchover and with intermittent purging facility.

12. Analyser shall be microprocessor-based and the analyser PLC shall do all related sequencing & logic functions. Software communication between Analyser and main automation system shall be provided wherever specified in the Technical Specification.

13. System & application software for configuring and diagnostics of the analyser PLC shall be provided.

14. Response time of the Analyser system shall be designed to comply with process requirements.

15. Unless otherwise specified, accuracy of analyzers shall be within ±1% of span. Repeatability of analyzers shall be within ± 1%. Calibration period shall be indicated along with the drift for non-auto calibration mode.

16. Where there is a possibility of choking of analyser inlet filters, automatic inert gas purging facility initiated by the analyser PLC shall be provided.

17. All solenoid valves used in gas analysis system shall have manual override.

18. Separate air-conditioned analyser room shall be provided as close to the gas sampling points, as possible. Storage of calibration gas cylinders shall be arranged outside the analyser room in a separate ventilated enclosure. Ambient CO monitoring unit shall be provided in the analyser rooms depending on the gas being analysed. Corresponding alarm annunciation & acknowledgement/ reset push buttons shall be installed on the outside wall adjacent to the entry door. Other safety equipment/ detectors if required, for filter panels/ scavenging panels, shall also be provided.

19. Inert gas and / or steam purging point with flexible hose connection and isolation valve shall be provided in the Analyser room.

20. Analysers in explosion hazardous area shall be installed in ex-proof shelters with ex-proof electrical fittings.

21. Exhaust tubing shall be provided for the sample gas after analysis and will be either vented into atmosphere at safe elevation/ distance, or fed back into the process stream. Gases containing hydrogen shall have separate outlets.

© 2022 MECON Limited All rights reserved

22. Poisonous and explosive gas detection systems shall have safety-limit alarm annunciation. Safety limits of different gases shall be as per OSHA norms.

23. Normally, the following types of gas detectors / sensors shall be used. However, type of sensor shall be selected, depending on the application:
    i. Electro-chemical cell
    ii. Semiconductor/ solid state cells
    iii. Thermal conductivity
    iv. Paramagnetic
    v. Catalytic poison resistant
    vi. Non-dispersive Infra-red radiation type
    vii. Zirconia

04.01 PORTABLE GAS DETECTORS

1. The portable gas detectors shall be supplied for the use of operating/ maintenance personnel, if specified in the Technical Specification.

2. It shall have audio-visual alarm, vibration alarm and shall be suitable to use in specified hazardous area.

3. Built-in indication (back light LCD display) for the measured value shall be available. Preferably it shall have intrinsically safe electronics and shall be certified by FM/UL/BASEEFA/ATEX.

4. Each of these units shall be supplied with rechargeable battery and 240 VAC, 50 Hz battery charger.

5. These units shall be supplied with its accessories such that carrying case, maintenance kit, calibration kit etc.

04.02 PORTABLE FLUE GAS ANALYSER

1. It shall be used to measure concentration of O_2, CO, CO_2, NOx, SOx in flue gas.

2. Combustion efficiency, CO_2% and CO/CO_2 ratio shall be calculated in the analyser.

3. The portable gas detectors shall be supplied with its controller, sample probe (SS) & hose.

4. Built-in indication (back light LCD display) for the measured value shall be available.

5. Each of these units shall be supplied with rechargeable battery and 240 VAC, 50 Hz battery charger.

6. The Analyser shall have data logging facility alongwith suitable interface for downloading of data in PC.

© 2022 MECON Limited All rights reserved

05. LIQUID ANALYSIS SYSTEM:

1. Analysis of pH or Oxidation–Reduction Potential (ORP) of industrial liquids shall be done using a measuring electrode and reference calomel electrode sensing system. The type of electrodes shall be selected based on the electrochemical and physical properties of the liquid.

2. Material of construction of conductivity analysis cell shall be based on the chemical corrosion activity and physical properties of the process medium. The type of electrodes shall be selected based on the electrochemical and physical properties of the liquid.

3. Buffer solution shall be provided along with the analyser for calibration purpose.

06. CONTROL VALVES

1. Control valves shall be provided with by-pass valves wherever necessary to meet process & maintenance requirements.

2. Control valve characteristics shall be chosen in accordance with process requirement.

3. Globe type control valve body material shall be carbon steel with stainless steel trim, as a minimum. For cavitation/ flashing application, harder trim material like SS316 with stellited/ 17- 4 PH/ 440C shall be used. For oxygen service & for other corrosion services, compatible material shall be used for body & internals depending on velocity range.

4. For butterfly type control valve, body material shall be carbon steel with stainless steel disc for valve sizes up to 1000mm. Generally for valve sizes of more than 1000mm, body & disc material may be carbon steel. However for specific applications, other materials may be used, as per proven practice.

5. Control valves shall be sized in accordance with ISA-S75-01 or as per the standard followed by manufacturer.

6. Valve sizing calculation shall be made available for verification of valve sizing.

7. Control valves shall be sized so that at minimum and maximum flow, the valve lift/ opening is between 10% to 90% for equal % and 20% to 80% for linear characteristics.

8. For applications with line pressure of $\leq$ 3 Kg/cm^2(g) & valve sizes > 600 mm, fabricated type butterfly valves may be used. For line pressure of > 3 Kg/cm^2(g), cast type butterfly valves shall be used for all valve sizes. For valve sizes upto 600 mm, cast type butterfly valves shall be used for all applications.

9. All control valves shall be provided with hand wheel.

10. Wherever required (such as, in high temperature applications) or wherever specified, hard-faced or stellitied valve trims shall be provided.

© 2022 MECON Limited All rights reserved

11. In extreme temperature applications, seal-welding of threaded seat-rings, etc. shall be done.

12. In very low temperature applications, valve trim materials shall be chosen to have adequate cold impact strength.

13. 'Trim' of a control valve shall include those parts of body assembly (excluding body, bonnet and bottom flange), which are exposed to and in contact with, the process medium. These parts shall consist of but not be limited to the seat ring, valve plug, plug stem, plug guide bushing and cage.

14. Valve guide bushing shall be of sufficiently hard material to resist side-thrust on the valve plug.

15. For pneumatic actuators, the shaft from actuator connected to the valve stem shall be of SS 316 material.

16. For temperature applications below 200°C, 'Teflon' valve packing shall be used. For temperature applications exceeding 200°C, 'grafoil' packing shall be used.

17. Steam / electrical tracing shall be provided to control valves, wherever process demands.

18. Control valves in steam service shall be provided with IBR certification, if required as per IBR standard.

19. Valve body size shall be minimum 25 mm for line sizes >25 mm, with reduced trim. as per requirement. For line size less than 25 mm, valve size shall be equal to line size.

20. Single seated globe valves with top guided plugs shall be generally used for low & medium flow applications & for clean fluid applications as well as fluid with suspended particle applications. Cascaded trim shall be used for cavitating services.

21. Globe valves with cage guided plugs are pressure balanced & shall be used for high differential pressure applications where the fluid is clean or if there is a chance of flushing/ cavitation. Generally, single seated globe valves with cage-guided plug shall be used from the viewpoint of maintenance & for better leakage class. However, double seated cage guided valves shall be used for better pressure balance to meet process requirement.

22. Top & bottom guided double port double seated straight through type globe valves shall be used for very high flow applications & where wide rangeability is required.

23. Extension-bonnets shall be provided in control valves for services above 200°C or below (-) 30°C, or as recommended by the manufacturer.

24. Other types of valves (e.g. butterfly, angle, eccentric-disk, ball, V-notch ball type, etc.) shall be used only when operating conditions do not allow globe type valves.

25. For high viscous liquids, V-notch ball valves shall be used.

© 2022 MECON Limited All rights reserved

26. Angle valves can be used wherever required as per piping design and also for slurry application. In case of high-pressure drop application, multistage single seated cage guided angle valves shall be used.

27. Three-way valve shall be used in mixing & diverting services.

28. Concentric disc type/ eccentric disc type butterfly valves shall be used in large line sizes & mainly in low-pressure applications or where allowable pressure loss across the valve is very low. Concentric disc type butterfly valves shall be designed for maximum opening angle of 60°. The maximum permissible opening for eccentric disk type butterfly valves shall be 90°. Applications where wide rangeability is required, eccentric disc type butterfly valve shall be used instead of concentric disc type butterfly valves.

29. Large size piston-operated and diaphragm-actuated type control valves or dampers shall be provided with positioners. Such valves or dampers shall have signal bypass facilities for manual local operation.

30. The maximum allowable noise due to operation of valve is 85 dBA SPL. In case, the predicted noise level during calculation exceeds 85 dBA, the control valve shall be treated for noise. Only source treatment of noise shall be resorted to.

31. Control valve leakage class (in accordance with ANSI FC 70.2 / API) shall be selected as per process requirement.

32. Valve stem-position indicator shall be provided for all the control valves.

33. All diaphragm-type control valves shall have hysterisis (without positioner) less than 2% of spring range.

34. Fire-safe valves, wherever required, shall be as per API 607 and design shall be as per API-6D

35. Control valve accessories, such as solenoid valves, positioners, limit-switches, air-filter regulators etc., shall be firmly mounted on the valve body or yoke and shall be properly tubed using SS/ PVC-jacketed copper tube.

36. Valve position feedback & end limit switches shall be provided for all the regulating duty control valves. End limit switches for on-off valves shall be provided.

37. Solenoid valves installed in the control air supply line shall be of Universal type having minimum class ‘F’ insulation and shall be continuously rated direct-acting type. Solenoid valves shall be full-bore type with minimum bore size 3 mm.

38. Solenoid valves coil shall be 24 VDC and with LED indication.

39. Control Valves shall be pneumatically actuated/ electrically actuated/ electro-hydraulically actuated, depending on application requirement.

06.01 **Actuators**

© 2022 MECON Limited All rights reserved

1. Actuators shall be sized for shut-off differential pressure.
2. Actuators shall be pneumatically/ electrically/ electro-hydraulically operated, depending on the requirement specified in the Technical Specification.

A) Pneumatic actuators :

1. For spring-opposed diaphragm type actuators, the spring shall be corrosion-resistant and cadmium or nickel-plated.

2. Actuator diaphragm operating range shall be selected based on shut-off pressure requirement of the valve. I/P converter output shall be in general 0.2 to 1.0 kg/cm^2. Actuator shall be designed for minimum air supply pressure of 3.5 kg/cm^2.

3. Valve positioners or boosters may be considered for actuators for the following applications:
   a) To split the controller output to more than one valve.
   b) To amplify the controller output beyond the standard signal range (i.e., 0.2-1kg/cm^2), in case of actuators with greater thrust or stiffness.
   c) To achieve minimum overshoot and fast recovery in control action, as in the case when long control air lines have to be used.
   d) In all the above applications, whether or not a positioner or booster is to be used, shall depend on the speed of response of the system.
   e) Wherever required, boosters shall be used for systems with a fast response (e.g. pressure and flow control loops etc.) and positioners shall be used for relatively slower control loops (e.g., temperature and level loops etc.).
   f) Actuator casing and diaphragm shall be designed to withstand atleast twice the maximum pneumatic operating pressure of the control valve.
   g) For butterfly valves, either pneumatic rotary actuators or linear power cylinders shall be considered depending on application requirement.

B) Electrical actuators:

1. The actuator shall have electric motor and gear box assembly for having low speed and high torque output.

2. The motor of electrical valve actuator shall be intermittent duty, high torque and high slip motor.

3. Gear mechanism shall be self- locking type.

4. The standard fitment of electrical actuator shall include as minimum :
   - Torque and end limit switches (2 NO + 2 NC for each limit switch.)
   - Intermediate limit switches as required. (2 NO + 2 NC for each limit switch.)
   - Valve position transmitter.
   - End travel indicator
   - Overload protector by a thermostat embedded in the motor winding.

© 2022 MECON Limited All rights reserved

5. Power supply to actuator shall be through fast acting fuse –switch unit or fast acting circuit breaker.

6. Local control box with open/close, emergency stop pushbutton, local/remote selector switch and open close indication shall be provided.

7. Power supply shall be 240 V, 50 Hz, single phase or 415 V, 50 Hz, 3 phase, 4 wire.

8. Insulation class of motor shall be selected as per NEMA standard depending on ambient operating temperature

9. Separate cable entry & gland shall be provided for power supply, control signals and position transmitter.

10. In explosion hazardous area use of electrical actuator shall be avoided. However, in case, electrical actuator has to be selected, shall be ex-proof type.

11. Regulating duty motors shall be generally selected as per following guidelines:

Sl. No.	Ambient. temp. in ^{o}C	Duty cycle of motor, in %	Starts per hour	Remarks
1	-30 to 40	100	1200	For example, if 100 % duty cycle motor is selected for 1200 start/hour use between ambient temp. range of (-) 30 to 40 ^{o}C, then the same motor can be used for 630 starts/hr only, if ambient temperature range is increased to 40 - 60 ^{o}C. Similarly, if 50 % duty cycle motor is selected then the start / hr of 1200 will be reduced to 600
2	40 to 60	100	630	
3	60 to 70	100	516	
4	-30 to 40	50	600	
5	40 to 60	50	315	
6	60 to 70	50	258	

12. Electro-hydraulic actuators for Butterfly control valves shall be foot mounted type & connected to control valves by Link rod.

13. Travel time of valve assembly with electrical actuator from full close to full open shall be $\leq$ 40 sec. to meet process requirements. Position transmitter for electrical actuator with butterfly valves shall be capacitive / inductive type.

06.02 **Positioners**

1. Valve positioners, wherever required, shall be side-mounted on the control valves and shall be direct-acting type, unless otherwise indicated.

2. Wherever the operating range of the actuator is the same as that of the control signal, the positioner shall be provided with an integral bypass switch.

© 2022 MECON Limited All rights reserved

3. All valve positioners shall have integral pressure gauges to indicate input supply, control signal and positioner output pressures.

4. All pneumatic connection points shall be of ¼" NPT(F). In case they are different, suitable adapters shall be provided.

5. Positioners shall have corrosion-resistant linkages and rugged brackets.

6. Control valves positioners shall have repeatability within 0.5% of stroke, for a given input signal.

7. Valve positioners shall be SMART type with HART protocol.

8. All control valves shall be provided with position transmitters. Position transmitter shall be capacitive/ inductive type.

9. Required numbers of air filter regulator shall be provided with each control valve.

06.03 **Limit switches**

1. Limit switches, wherever specified in the Technical Specification, shall be suitable for mounting on the valve and shall be supplied along with all mounting accessories.

2. Limit switch enclosures shall be weatherproof to NEMA 4, or suitable for the specified hazardous area classification.

3. Limit switches shall be SPDT type, silver-alloy-plated, hermetically sealed and rated for minimum 240 VAC, 2A.

4. Flying leads are not acceptable. Terminal blocks of limit switches shall be located inside the switch housing.

07. CALORIFIC VALUE ANALYSER (Wobbe Index based)

Calorific value analysers shall include the following, depending on requirement :

1. Gas preparation (cleaning, drying, etc.) unit consisting of:
   a) Electrically or steam-heated sampling tube, in case of gases like coke-oven gas, blast-furnace gas, mixed-gas & LD gas, to ensure that constituents like tar, naphthalene and moisture are not condensed. This requirement may be relaxed in case of clean gases like LPG or CNG.
   b) Arrangement for removal of unwanted constituents like condensate (e.g., water separation pot), tar and dust (i.e., filters).
   c) Sample suction pumps (1 working + 1 standby), in case the sample pressure is lower than the sample inlet pressure required for the analyser.
   d) Arrangement for steam and / or nitrogen purging of tapping point.
   e) Pressure regulators, as necessary.
   f) Calibration facility (auto/manual) with required items, accessories & calibration gas cylinders.
   g) Cooling air fan.

© 2022 MECON Limited All rights reserved

2. Ceramic Burner, Safety pilots for burner, Thermopile, Pressure governor, as required for the Analyser shall be provided.
3. The sampling system shall be suitably designed considering gas composition and its impurities.
4. Analyser shall be microprocessor based. Output of the analyser shall be 4 – 20mA DC, corresponding to the CV value of the sample gas.
5. Manufacturer's software for configuring and diagnostics of the analyser shall be provided, as applicable.
6. Sampling system shall be designed to have minimum transportation time. Corresponding calculation for the same shall also be submitted..
7. Unless otherwise specified, accuracy of analysers shall be within ± 1.5% of span.
8. All solenoid valves, used in analysis system, shall have manual override.
9. Air- conditioned analyser room shall be provided as close to the the gas sampling points as feasible. Storage of calibration gas cylinders shall be arranged outside the analyser room in a separate ventilated enclosure..
10. Exhaust facility shall be provided in the analyser room taking care of all safety requirements.
11. A single-point carbon-monoxide detector and / or lower explosive limit detector (as applicable) shall be provided in the CV analyser room, with annunciation outside the room, for operator safety.
12. An exhaust fan arrangement shall also be provided in the CV analyser room for exhaust of harmful / flammable gases.
13. All electrically operated items in the CV analyser room shall be flameproof / explosion proof.
14. Analyser panel shall have suitable digital display facilities in engineering units.

08. FLAME DETECTOR

1. UV type flame failure detector, suitable for the intended application shall be offered. Swivelling arrangement shall be provided for proper focussing of the flame detector.
2. The detector shall have self diagnostic facility.
3. For alarm output, potential-free contact (1 NO + 1 NC) shall be provided.
4. Suitable panel for housing the complete electronic system at field shall be supplied.

09. CONVENTIONAL INSTRUMENT PANELS / CABINETS

1. Panels shall be totally enclosed; flush-front, freestanding upright floor mounted type with welded construction. Panels shall be mounted on box-type base-frame.
2. Panels shall be made of cold rolled cold annealed (CRCA) sheet steel with thickness as follows:-

Front face, gland plate, equipment mounting plate and other load-bearing sections	:	3mm
Door, top, bottom and side faces	:	2mm

© 2022 MECON Limited All rights reserved

3. Sizes of panels and cabinets, as approved by purchaser / consultant, shall only be supplied.

4. Panel height shall be 2200 mm. with an additional 100x50x6 mm base channel and 15 mm thick anti-vibration pad on top. The panel / cabinet shall have minimum depth of 800 mm. Height and colour of new panels, to be installed in any existing room, shall match with those of existing panels.

5. If the panel width exceeds 600 mm, double-door type construction shall be provided.

6. Panel doors shall have flush-type and lockable door-handles. Pockets for keeping drawings, shall be provided on inner side of the doors.

7. Panel doors shall have mesh-covered louvers at top & bottom, for air circulation. Additionally, wherever necessary, push-pull type circulating fans shall be provided for cooling of equipment inside.

8. In general, mounting height of instruments in the panel shall be as follows:

   i) Miniature instruments (bottom levels matched):
      - Bottom row - 1000 mm
      - Middle row - 1350 mm
      - Top row - 1600 mm.

   ii) Annunciator : 1900 to 1950 mm (bottom levels matched):
   iii) Push buttons : 800 mm centre line (excluding base channel)
   iv) Hooter (for alarm) : Outside cabinet - preferably at panel top.

   Panel-mounted instruments conforming to DIN size and mounted in the same row shall have their bottom levels matching.

9. All equipment inside the panel shall be located in such a manner that their terminals and adjustments are readily accessible. Panels shall be dust and vermin proof. Panels installed in control rooms shall be weatherproof having minimum IP42 degree of protection. Suitable gaskets shall be provided, for this purpose.

10. Panel / cabinets located in the field shall have minimum IP-54 degree of protection. Pressurised local cabinets shall be installed in dusty areas. Pressurisation shall be achieved inside the cabinet by introducing clean (i.e., dust-free) air.

11. A space of at least 1.5m shall be provided in front and behind panels / cabinets for ease of operation and maintenance.

12. If the length of a panel exceeds 5m, approach from both sides shall be provided.

13. No process fluid other than air shall be piped to the panel / cabinet.

14. Panels / cabinets / desks etc. shall be supplied in finish-painted, completely wired and tested condition.

15. Panels shall first be chemically de-greased, de-rusted and phosphated. Then, 2 coats of red-oxide shall be applied. Finally, 2 coats of synthetic enamelled paint or epoxy-

© 2022 MECON Limited All rights reserved

based paint shall be applied to have a non-glossy high class finish with aesthetically pleasing appearance and long life.

16. Colour shade of panels shall conform to RAL 7035. Outside shade of panels shall generally be RAL 7035, unless otherwise specified. The inside of panels shall be of brilliant-white. Panel base channel shall be painted black.

17. Supplier shall ensure uniformity of colour and height of all the panels, wherever instrument panels are installed along with electrical or other panels in the same room, or also as per existing plant standard, wherever applicable.

18. Panels shall have lifting hooks or eyebolts on the top at the four corners, for ease of transportation.

19. Instrument power supply shall be through a 1:1 isolation transformer to be installed in the instrument panel, in case of non-UPS power supply.

20. The inside of panels / cabinets / local panels shall be illuminated, preferably using incandescent type lamp. The illumination lamp shall be switched on/off using either a door switch or a toggle switch.

21. An inscription plate (with white letters on a black background) containing the tag no. etc. shall be provided for each instrument / device mounted on the panel. Separate nameplates shall be provided for rear-panel mounted instruments.

22. Anti-vibration mounting or shock absorber shall be provided for panel-mounted instruments in vibration-prone areas.

23. ISA symbols shall be used in Mimic panels. Graphic design, colours, materials, etc. used in mimics shall be in accordance with existing plant standard or as per Purchaser's choice.

24. For wall mounting type panel or pedestal mounting type panel, panel shall be suitably designed and finalized during detailed engineering stage.

25. For panel wiring, following guidelines shall be followed:

Signal wiring	1.0mm^2 PVC insulated, stranded Cu-wire: gray colour

Power supply wiring:

- For 240/110V, 50 Hz (for power)	1.5 mm^2 PVC insulated stranded Cu-wire, colour code: ⇨ Live : red ⇨ Neutral : black ⇨ Earth : green
- For 24V, DC signal	1.0 mm^2 PVC insulated stranded Cu-wire, colour code: ⇨ Positive : brown ⇨ Negative : blue
- For 24V, DC solenoid valves	1.5 mm^2 PVC insulated stranded Cu-wire, colour code: ⇨ Positive : grey ⇨ Negative :yellow
- Earth	4.0 mm^2 PVC insulated stranded Cu-conductor,

© 2022 MECON Limited All rights reserved

colour code: green-yellow spiral

26. Screen wires of screened signal cables from the field shall be earthed at the electronic earth-pit of the control system, which shall be separate and independent with respect to the power supply earth grid.

27. The following points shall be taken care of while deciding the internal layout of instrument panels or cabinets:
    i. Electrical voltage higher than 240 V AC/DC shall not be brought inside the instrument panel / cabinet.
    ii. All internal wiring shall be housed in covered, non-flammable plastic raceways. Ferrule printing machines shall be used for ferruling.
    iii. Separate wiring raceways shall be used for power supply wiring, signal wiring and intrinsically safe circuits' wiring.
    iv. Distance between the continuous edges of two adjacent terminal strips shall be minimum 100 mm.
    v. Separate terminal strips shall be provided for 24 V DC, 240/110 VAC and intrinsically safe terminals.
    vi. Distance between cable gland plates & bottom of terminal strips shall be minimum 300 mm.
    vii. Terminal blocks shall be screw-less clip-on type.
    viii. For signal wiring, 2.5mm^2 size terminals shall be used.
    ix. For power wiring, 4.0 mm^2 terminals shall be used.
    x. Terminal Blocks shall be of different colours for power, signal and earth.
    xi. A minimum of 20% spare terminals shall be provided, for power, signal and intrinsically safe circuits' wiring.
    xii. Power supply terminals (e.g. 240VAC or 110VAC or 24VDC) shall be labelled.
    xiii. In case a bus bar is used for power supply distribution, the bus-bar shall be shrouded with a transparent Bakelite plate.

28. Panels or cabinets shall be provided with the following items:
    i. Power socket (of 240V AC, 15W rating) for soldering, etc.
    ii. Pair of earthing bolts for power earthing.
    iii. Copper bus-bar (of size 25x3mm.) mounted on an insulated base inside the panel with holes and nut-bolts - for instrument signal earthing (i.e., electronic earthing).

10. ELECTRICAL SYSTEM

1. The instrumentation and control system including all field instruments and the process computer shall be provided with a power supply system with provision of continuous availability of power even in case of fault or failure of the local power supply source.

© 2022 MECON Limited All rights reserved

2. Instrument power supply shall be single phase 240 V A.C. All instrumentation equipment shall be suitable for power-supply fluctuation within **240V AC, +10%, -15% and 50Hz +3%, - 6%.**

3. Power supply through UPS shall be through parallel redundant UPS with minimum 30 minutes of battery backup. (For details, electrical part of GTS may be referred).

4. A master circuit breaker (with short-circuit protection and overload release facility) shall be installed in the instrument power supply line for both UPS & non-UPS power.

5. Terminals of 240 V. AC and above shall be labelled and isolated from terminals of lesser voltages.

6. All electrical systems and installations shall meet the statutory requirements of the Indian Electricity Act and rules & regulations of Central & State Government.

7. No instrument contact shall be used directly for alarm annunciation or interlocking. Contacts after multiplication through relays shall be used for alarms and interlocks.

8. All 4–wire instruments shall be provided with individual circuit breakers. All DCS/PLC loop powered instruments shall be provided with individual fuse in the terminal blocks of DCS/PLC.

9. Derivation of necessary voltage grade from the available power supply, as may be required for the offered system & distribution of power shall be carried out by the Contractor.

10. Power supply equipment for instruments as may be required, shall be installed inside the instrument panel.

11. For analog signals (4-20 mA) pair/ triad/ quad cables to be used and for discrete signals/ power cables core cables 1.5 sq mm to be used.

12. For each field switch (pressure/ differential pressure/ flow/level/ temperature, control valve limit switch), & RTD (for 3 wire system), triad cable shall be used from switch/RTD to JB/Temperature Transmitter. From JB to control room, multi-triad cable shall be used. Looping of power at the junction box shall not be done.

13. Instrumentation pair/triad cables shall conform to the following:

    i) All cables shall be screened & armoured.

    ii) Applicable standards: Latest revision of IS 8130, IS 5831, BS 5308 IEC 60092-376

    iii) Conductor material shall be annealed, tinned, multi-stranded, electrolytic grade copper of size 1.0 mm^2. 1.5 mm^2 cables shall be provided based on the requirement.

    iv) Number of strands and strand size of conductor shall be 7/0.43 for 1.0 mm^2 and for 1.5 mm^2 , it shall be 7/0.53.

© 2022 MECON Limited All rights reserved

v) Primary insulation material shall be of Extruded HRPVC type C of thickness (nom) 0.6 mm.

vi) Individual pair/triad shall be shielded by aluminum mylar tape, helical type, 0.06 mm thick (nom) with 100% coverage and 25% overlapping.

vii) Drain wire shall be of annealed tinned copper, 0.5 mm^2, and 7 strands continuously in contact with the shield. Drain wires shall be provided for each pair/ triad screen.

viii) Inner sheath shall be Extruded HRPVC (ST2 type) / FRLS (as applicable)/ LSZH (as applicable). Thickness (nom) shall be as per the details indicated the table below. Inner sheath colour shall be black.

ix) Overall shielding shall be helical type 0.075 mm thick aluminum Mylar tape with 100% coverage and 25% overlapping.

x) Overall drain wire shall be of annealed tinned copper, 0.5 mm2, and 7 strands continuously in contact with the shield.

xi) Ripcord shall be provided & shall be non-metallic type under sheath.

xii) Armour material shall be galvanized round steel wire.

xiii) Armour size shall be as per the details indicated the table below.

xiv) Outer sheath shall be Extruded HRPVC (ST2 type) / FRLS (as applicable)/ LSZH (as applicable). Thickness (nom) shall be as per the details indicated the table below. Outer sheath colour shall be blue.

xv) Table for minimum thicknesses of inner sheath, armour & outer sheath for signal (pair /triad) cables shall be as follows :

Type of pair cables	**Type of triad cables**	**Thickness of inner sheath**	**Thickness of armour (dia.)**	**Thickness of outer sheath**
Up to 4P x 1.0 mm^2	1T to 2T x 1.0 mm^2	1.1 mm	0.9 mm	1.5 mm
5P to 9P x 1.0 mm^2	3T to 6T x 1.0 mm^2	1.2 mm	1.25 mm	1.6 mm
10P to 14P x 1.0mm^2	7T to 9T x 1.0 mm^2	1.3 mm	1.6 mm	1.8 mm
15P to 19P x 1.0 mm^2	10T to 12T x 1.0 mm^2	1.5 mm	1.6 mm	1.9 mm
20P to 24P x 1.0 mm^2	13T to 16T x 1.0 mm^2	1.7 mm	2.0 mm	2.0 mm
Up to 4P x 1.5 mm^2	1T to 2T x 1.5 mm^2	1.2 mm	1.25 mm	1.6 mm
5P to 9P x 1.5 mm^2	3T to 6T x 1.5 mm^2	1.3 mm	1.6 mm	1.8 mm
10P to 14P x 1.5mm^2	7T to 9T x 1.5 mm^2	1.5 mm	1.6 mm	1.9 mm
15P to 19P x 1.5 mm^2	10T to 12T x 1.5 mm^2	1.7 mm	2.0 mm	2.0 mm
20P to 24P x 1.5 mm^2	13T to 16T x 1.5 mm^2	1.7 mm	2.0 mm	2.1 mm

© 2022 MECON Limited All rights reserved

xvi) Tests shall be carried out according to following standards of latest revision:

a) General: IS: 1554 (Part I) except for thicknesses of insulation & sheath.

b) Insulation: IS: 5831except insulation resistance, Voltage and Spark tests, which shall be as per BS 5308 Part II

c) Armour: IS: 3975

d) Armour Galvanisation: IS: 2633

e) FRLS properties test

- Oxygen Index According to: ASTM D2863
- Temperature Index According to ASTM D2863
- HCl Emission According to IEC 754-1
- Smoke density According to ASTM D2843
- Flame Retardant test According to IEC-332 Part III Cat A

xvii) Pair/ Triad shall be identified with numbers as per BS 5308. IEC 60092-376

xviii) Electrical characteristics, values like, resistance at 20 ^{0}C, Mutual capacitance (core to core), mutual capacitance (core to screen), mutual inductance, L/R ratio shall be indicated in the specification datasheets.

xix) A durable marking provided on the surface of the cable at regular intervals not exceeding 625 mm. The marking shall include manufacturer's name, conductor material and size, no. of pair, insulating material etc. as per IS: 1554 (Part I).

14. Instrumentation Power supply cable/ control cable: -

i) All cables shall be armoured. For 240 VAC/ 110VAC power supply to field instruments, directly 3-core cable from control room/ power distribution board to individual instrument through individual MCB shall be used.

ii) Conductor material shall be annealed, tinned, multi-stranded electrolytic copper of 1.5 mm^2.

iii) Number of strands and strand size shall be min 7/0.53.

iv) Primary insulation material shall be of Extruded HRPVC type C. Thickness (nom) shall be 0.8 mm.

v) Inner sheath shall be Extruded HRPVC (ST2 type) / FRLS (as applicable)/ LSZH (as applicable). Thickness (nom) shall be 0.3mm. Inner sheath colour shall be black.

vi) Armouring shall be of galvanized round steel wire or galvanized steel strip as per IS 1554 (Part 1).

vii) Outer sheath shall be Extruded HRPVC (ST2 type) / FRLS (as applicable)/ LSZH (as applicable). Thickness (nom) shall be 1.24 mm, 1.4 mm, 1.56 mm as applicable & conforming to IS 1554. Outer sheath colour shall be black.

viii) Tests shall be carried out according to following standards of latest revision:

a) General: IS: 1554 (Part I).

b) Insulation: IS: 5831

c) Armour: IS: 3975

d) Armour Galvanisation: IS: 2633

e) FRLS properties test

© 2022 MECON Limited All rights reserved

- Oxygen Index According to: ASTM D2863
- Temperature Index According to ASTM D2863
- HCl Emission According to IEC 754-1
- Smoke density According to ASTM D2843
- Flame Retardant test According to IEC-332 Part III Cat A

ix) Core identification shall be as per IS 1554 (Part 1).

x) Electrical characteristics, values like, resistance at 20 ^{0}C, Mutual capacitance (core to core), mutual inductance, L/R ratio shall be indicated in the specification datasheets.

xi) A durable marking provided on the surface of the cable at regular intervals not exceeding 625 mm. The marking shall include manufacturer's name, conductor material and size, no. of pair, insulating material etc. as per IS: 1554 (Part I).

15. Shield shall be kept open at the instrument end and to be connected to the electronic earth pit at the control room end.

16. For shielded compensating cable the shield shall be earthed near the point of the circuit ground. For grounded junction thermocouples, this means at the thermocouple head. For ungrounded junction thermocouples this means at the control room end.

17. Cross section of conductor of Compensating/Thermocouple extension cables shall be minimum 3 X 22 SWG (1.19 mm^2).

18. Insulation thickness of Compensating/Thermocouple extension shall be of Extruded HRPVC type C of minimum thickness (nom) of 0.45 mm.

19. Compensating/Thermocouple extension cables to be used in high temperature zone or are to be laid on the top of the furnace/hot surface, shall be sintered Teflon insulated (0.45 mm minimum), sinter Teflon sheathed overall SS braided (0.15 mm, minimum 80% coverage) cables. Additional Glass fibre insulation shall be used for temperature zone > 250 °C. Mineral insulated extension cables can also be used for such application.

20. Compensating/Thermocouple extension cables having inner & outer sheath of HRPVC/ FRLS (as applicable)/ LSZH (as applicable) and armouring; the thickness of sheaths and armouring shall be provided as per the table indicated above for pair/ triad cables.

21. All instrumentation cables (pair/triad) shall be numbered as per BS 5308, Part 1.

22. All cables, from field JBs to panels/ marshalling rack in the control room shall have at least 10% (minimum 1 no.) spare core/pairs/ triads (as applicable).

11. PNEUMATIC SYSTEM

1. Air supply to pneumatic instruments shall be dry and free from oil, dust and moisture as specified below. Specification of instrument quality air shall be as per

© 2022 MECON Limited All rights reserved

ISA S-7.0.01. Air shall be supplied from oil free compressors. The air shall be filtered & dried in a drier and stored in storage vessel of suitable capacity to ensure at least 30 minutes of continuous operation. On the supply line to each shop, pressure gauge shall be provided before and after the pressure reducer. On air supply failure, audio-visual alarm shall be initiated.

2. Instrument quality air shall have following parameters :

   Dust particles size : Not more than 5 micron

   Oil content : not to exceed 5 to 10 ppm

   Pressure Dew point : 10°C below the minimum temperature attained at any time of the year at site. However, pressure dew point shall not exceed 4° C at line pressure.

3. Nitrogen, if used as pneumatic air supply, shall be provided with filter and regulator.

4. Supply airline to individual instruments shall have air pressure reducers, filters and isolating valves separately for the instrument. These shall be installed as near to the instrument as possible. For supply of instrument air to a clustered group of consumers, instrument air manifold shall be used.

5. In case, only industrial grade compressed air (at a pressure of 6 to 8 kg/cm^2)is available instead of instrument quality air, then heatless dessicant type air drying and filtration unit shall be provided to achieve the specified quality of instrument air for supplying to consumers at required pressure through individual air filters and regulators.

6. In case, centralized air drying and filtration plant is not provided, specially for small shop units, suitable air drier & filter regulator units with accessories shall be provided at each consumer point for achieving instrument quality air from compressed air.

7. Transmission of pneumatic signals shall be done by 6 mm or 8 mm (for longer distance) by seamless steel tube or properly protected copper tube or armored tube bundles.

8. Distribution of instrument air shall be through air header/ manifold with separate supply to each instrument through SS ball valve.

12. CONTROL ROOM DESIGN

1. Control rooms shall be aesthetically and ergonomically designed as per modern features with adequate safety features.

2. Doors shall be provided with automatic door closer and double doors shall be provided in dusty atmosphere. Doors shall preferably open outside. Doors shall be made of glass in aluminum frame.

© 2022 MECON Limited All rights reserved

3. Windows shall be made of aluminum frames and the glass panes shall be long, preferably on sheet for each frame. Small glass panes shall not be used. Glass windows shall be about 1,000 mm in height and at 750 mm from floor level.

4. Control room shall have false ceiling, false floor. Fresh air entering the control room shall pass through chemical filters.

5. The control room shall be air-conditioned with the following parameters:

Temperature	:	23± 2 ^{o}C
Relative humidity	:	50 to 60%
Dust content	:	0.1 mg / m3
No. of air changes	:	2 to 3
Positive pressure in the room	:	about 2 mm of WC

6. Walls shall be paneled with aluminum strips and painted with dust free, wear and fire resistant paints.

7. Ample room shall be provided around the instrument panel / boards (minimum 1.5 to 2 m).

8. Control room illumination level shall be adjustable in the range of 250-550 lux and generally maintained at 500 lux. Illumination shall be done with shadow less and glare free concealed fittings.

9. Mounting frames/ inserts for panel mounting shall be provided.

10. Cable troughs or openings in the floor shall be provided to bring the cables to the panels. The opening shall be sealed after completion of erection.

11. Normally gas impulse lines shall not be permitted in the control room. If however, gas lines do enter the control room, proper ventilation shall be provided with more air changes to ensure safety.

13. CABLE LAYING

1. All cables shall be supplied & laid in accordance with the cable schedules and cable layout drawings. Before laying, cables shall be meggered and tested.

2. All armoured cables shall be laid on trays. Un-armoured cables shall be laid in suitable conduits.

3. All cables routes/lengths shall be carefully measured as per site conditions and cut to the required lengths to prevent undue wastage. While deciding cable lengths, adequate extra length of each cable shall be kept at the termination points at both ends.

4. Cable shall have complete uncut lengths from one termination to the other. Joints are not acceptable.

© 2022 MECON Limited All rights reserved

5. Power and signal cables shall be laid in separate trays. A gap of minimum 250mm shall be maintained between power and signal cables wherever they are laid in parallel in the tray/ duct/ trench.

6. Crossing between signal cables and power cables shall be done perpendicularly.

7. Cables shall be terminated using cable glands. Cable shall enter into the control room or other room through conduit or through MCT (Multi-Cable Transit) block. Opening for cable entry in the rooms and other openings shall be properly sealed by sealing compound to make them thoroughly dust & leakage proof and to avoid entry of rodents.

8. At junction box and sensor end, metallic (Aluminum) cable tags with cable no. & J.B. no. at sensor end and sensor tag no. & cable no. at J.B. end shall be used. At control room end also metallic cable tag with cable no. and J.B. no. shall be used.

9. All cables shall be properly terminated using lugs, sleeves, printed ferrules, etc. for connection to terminal blocks.

10. All cores of electrical cables shall be identified by their wire numbers by printed ferrules as per finalised procedure.

11. Unused cores shall be taped with PVC or rubber insulating tape. Use of cloth or other fabric type is not permitted.

12. Each underground cable (either in concrete trenches or buried) shall be provided with identifying tags of made of Aluminum, securely fastened every 30m of its underground length with at least one tag at each end before the cable leaves/enters the ground.

13. Directly buried cables shall be laid underground in excavated cable trench wherever specified in layout drawings. Trenches shall have sufficient depth and width to accommodate all cables correctly spaced. Before cables are placed, the trench bottom shall be filled with 50mm layer of sand and levelled. Each layer of cables shall be covered with 50mm of sand on top and sand shall be lightly pressed. A protective covering of 75mm thick second-class red bricks shall be placed flat on the final layer of sand and cable. The remaining portion of the trench shall be then back filled with soil compacted and levelled. After levelling, excess soil if any shall be transported to a suitable place as shall be indicated by the purchaser. On completion of every group of cable laying, insulation test shall be carried out for every cables. Any cable found to be defective shall be replaced before the next group of cables is laid. Flags/ signboard shall be provided, indicating number of cables, depth and direction, along the cable route, on crossovers/ turnings etc. to mark the cable route. Cable route marker shall be used wherever the cable tag plates will be placed for under-ground routing.

14. At each road crossings and other places, where cables enter pipe sleeves, adequate bed of sand shall be given so that the cables do not get damaged by pipe ends after back filling. After laying, the pipe sleeves shall be sealed using sealing compounds. Wherever the cable is going into/ coming out of ground, ducts/ conduits shall be extended in the ground. Heavy grade GI conduit (as per IS 1239) or hume pipe, shall be used depending on number of cables for crossing of cables across roads/tracks.

© 2022 MECON Limited All rights reserved

15. After laying of all the cables, the cable entry to control room shall be suitably filled and sealed so as to achieve a positive seal against the entry of gas/ water.

16. When laid inside conduits, following guidelines shall generally be followed for selecting the conduit dia:

No. of cables	Conduit diameter
1	1.7 D
2	3.0 D
3	3.2 D
4	3.6 D
5	4.0 D
7	5.6 D

D = Outer diameter of cable.

17. For cable sheaths and cores, internationally accepted colour coding shall be followed.

18. Cable trays shall be made up of hot dip galvanized steel plates of minimum thickness of 2 mm.

19. Separate cable trays shall be used for low and high voltage.

20. Each tray shall be provided with 20% spare space.

21. Cables shall be clamped at every 1.5 m distance in horizontal runs and at every 2 m distance in vertical runs, in trays.

22. Cables, which are not laid in the cable trays, shall be laid through protective conduits.

23. Sharp bends in cables shall be avoided. Wherever necessary, junction and pull boxes shall be used.

24. Conduits, junction boxes and pull boxes shall be properly grounded.

25. In hazardous & dusty locations, detachable steel plate covers on the tray shall protect the cable.

26. Cables in hot areas shall have heat resistant sheaths / covering or other heat protection. After completion of cable laying work, all cable bushings on panels, desks and cabinets shall be filled with sealing compound against the floor.

27. After erection, cables shall be tested for insulation. At least two cables in each sub unit shall be tested.

28. Shield grounding shall be realised at one end of the cable only.

© 2022 MECON Limited All rights reserved

14. IMPULSE PIPE LAYING

1. Impulse lines shall be kept as short as possible consistent with good practice and accessibility and shall follow installation/hook up drawings. Drain/vent provision of impulse lines shall be provided.

2. All welding shall be carried out as per welding procedures and codes with electrodes approved by client. Only qualified welders shall carry out welding.

3. For installation of impulse tubes with compression fittings, proper care shall be taken for handling, bending of the tubes and tightening of the fittings. Standard instruction of the manufacturer shall be followed strictly for the above cases.

4. Pipes/tubes shall be bent using pipe/tube benders only. Hot bending of impulse pipes/tubes is prohibited. Impulse line bending shall be circular and smooth. Flat bending shall be rejected. Pipes/ tubes shall be cut using pipe cutting device. Hot cutting will not be allowed.

5. All threaded joints shall be joined with Teflon tape and no other joining component shall be used except on high temperature service, where graphite sealing components shall be used. Pipe threading shall be made using suitable threading machine.

6. Impulse lines shall be properly supported and shall be clamped with the support. Impulse lines shall never be welded with the support, metal constructions, equipment and structure of building. Supports shall not generally be taken from process pipes, equipment, handrails etc. unless otherwise required.

7. Proper slope in impulse line (minimum 1:10) shall be maintained.

8. Impulse lines for explosive gases and air/inert gases shall not be laid together.
9. Impulse lines shall not be brought inside the control room .

10. Drainage pipes shall be connected to the plant drainage.

11. Impulse pipe sizes, type of fittings, flanges and number of pipes in multi-tubular bundle shall be standardized before engineering and shall be mutually agreed to.

12. Protection shall be provided where damage is likely to occur.

13. At the lowest points of air or gas impulse lines provision for drainage is to be provided.
14. In pipelines for liquids vent is to be provided at the highest points.

15. Horizontally laid steel pipes may be fixed at every 1.5 m and vertically laid ones at every 2.0 m.

16. Impulse pipelines and instruments used for oxygen service are to be degreased and cleaned with trichloroethylene (TCE).

17. The impulse lines for oxygen shall be clearly marked with colour code.

© 2022 MECON Limited All rights reserved

15. EARTHING

1. All junction boxes, local cabinets, field mounted instruments (having 110 V AC & above power supply) shall be connected to the nearby earth bus bar through **6 mm^2** (min.) stranded copper conductor with green sleeve.

2. Earthing network shall be realized with earth electrodes and/or buried bare conductors.

3. Two types of earthing system shall be generally provided –
   I. Main earthing system (ME).
   II. Electronic earthing system (EE).
   III. The electronic earth system shall be separate and independent from main earthing system. Electronic earthing system will be suitably designed to meet the requirements of automation/instrumentation systems, as per manufacturer's recommendations.

4. In general, the earth conductor between EE busbar of cabinets/ marshalling rack up to the earth pit shall be 16 mm2 insulated copper conductor.

5. The following shall be applicable for earthing:
   - The metallic housing of electronic equipment/junction box /panel shall be connected to the main earthing system.
   - The active electronic parts of electronic equipment shall be connected to the electronic earth (EE).
   - The shield of the shielded cable shall be earthed to electronic earth at one end only i.e. at control room end.

6. For shielded compensating cable the shield shall be earthed near the point of the circuit ground. For grounded junction thermocouples, this means at the thermocouple head. For ungrounded junction thermocouples this means at the control room end.

16. GUIDELINES FOR SELECTION OF ERECTION MATERIALS:

01. Instrument Fittings:

Carbon steel Fittings

1. Fittings shall be as per ANSI B16.11.
2. Fittings shall be socket-weld type forged pipe fittings of material cadmium plated ASTM A105. The minimum rating shall be class 3000.

SS tube Compression Fittings

1. Fittings shall be as per ISA RP 42.1.
2. Fittings shall be flare less compression type and of three piece construction with ferrule, nut and body suitable for use on SS tube conforming to ASTM A269 TP316, hardness not exceeding RB 80.

© 2022 MECON Limited All rights reserved

3. Hardness of ferrules shall be in the range of RB 85-90 so as to ensure minimum hardness difference of 5 to 10 between tube & fittings for better sealing.
4. Threaded ends of fittings shall be NPT as per ANSI B1.20.1.

02. Instrument valves

1. The impulse line isolation and drain valves shall be forged gate/ ball/ globe valves with inside screwed bonnets. CS/ SS valve material shall be used depending on requirement. For steam application, gate valves of suitable rating shall be used and 3-piece ball valves for other applications. Ball valve seat material and rating shall be selected based on process requirement. For socket welded ball valves, nipple at both ends shall be welded at valve manufacturer's works before assembly, to avoid damage of seat at site while welding.
2. For SS valves, body and trim material shall be ASTM A182 Gr. F316. For CS valves body material shall be ASTM A105 Gr.II and trim material shall be ASTM A182 Gr. F316.
3. For screwed valves packing material shall be teflon only. However, for socket-weld valves packing material shall be grafoil only.
4. Valve hand-wheel material shall be cadmium or nickel plated steel.
5. Minimum valve rating shall be 400 class.

03 Impulse pipes & tubes

1. Impulse pipe shall be fully annealed, seamless and cold drawn 316SS tube as per ASTM A269
2. Tube wall thickness shall be minimum 0.049" unless otherwise specified.
3. 316 SS tubes along with 316 SS double compression fittings shall be used as impulse pipe for all application, except where the material is not compatible and for steam application. For steam service, socket weld type fittings of proper rating/ schedule shall be provided.

04 Cable trays and conduits

1. Perforated cable trays with sheet thickness of min. 2 mm shall be used for laying of cables.
2. The width of cable trays shall be so selected that 20% of tray space is available for future use of the complete installation.
3. Conduits used for cable laying shall be as per IS-1239 class medium & galvanized.
4. Material of trays with covers and conduits in corrosive environment, shall be corrosive resistant. Suitable material (FRP/GRP) shall be provided based on the corrosive atmosphere.

05 Transmitter cabinets/ enclosures/ canopies

1. Transmitter cabinets/ enclosures/ canopies shall be made of 2 mm thick MS sheet. For corrosive atmosphere, cabinets shall be weather proof and made of corrosion resistance Fibre Reinforced Plastic (FRP) material.
2. All cabinets shall be provided with external earthing lugs.
3. Sizes of cabinets/ enclosures/ canopies, as approved by purchaser / consultant, shall only be supplied and outside colour of panel shall be as per RAL 7035 (light gray) and inside white.

© 2022 MECON Limited All rights reserved

4. Enclosure/ canopies shall be suitable to protect the instrument from direct exposure to sun, rain water & dust.
5. Cabinets shall be provided with lockable door-handles.
6. All equipment inside the cabinet shall be located in such a manner that their terminals and adjustments are readily accessible.
7. Cabinets shall be dust and vermin proof. Suitable gaskets shall be provided
8. Pressurised local cabinets shall be installed in dusty areas. Pressurisation shall be achieved inside the cabinet by introducing clean (i.e., dust-free) air.
9. Cabinets shall be supplied in finish-painted, as per standard practice, completely wired and tested condition.
10. Cabinets shall have lifting hooks on the top at the four corners, for ease of transportation.
11. An inscription plate (with white letters on a black background) containing the tag no. & application shall be provided below each instrument.

06. Junction Boxes

1. Junction boxes shall be weather-proof. Enclosure degree of protection shall be minimum IP 65 as per IS 12063. Construction and testing shall conform to IS-2147.
2. Material shall be Die cast aluminum (LM-6 alloy) or FRP or thermoplastic or CRCA. For corrosive atmosphere, JB material of Die cast aluminum (LM-6 alloy) shall not be used.
3. JBs shall have locking facility.
4. Terminal shall be spring loaded, vibration proof, clip-on/ (Wago/Phoenix), mounted on nickel plated steel rails complete with end cover and clamps for each row. All terminals in JB shall be suitable for accepting minimum 4.0 mm^2 copper conductors.
5. Sizing shall be done with due consideration for accessibility and maintenance in accordance with the following guidelines.
   - 50 to 60 mm between terminals and sides of box parallel to terminals strip for up to 50 terminals and additional 25 mm for each additional 25 terminals.
   - 100 to 120 mm between terminals for up to 50 terminals and additional 25 mm for each additional 25 terminals.
   - Bottom/top of terminals shall not be less than 100 mm from bottom/ top of the junction box.
6. All junction boxes shall be provided with external earthing lugs.
7. Junction boxes shall be provided with adequate supporting/fixing arrangement with nuts, bolts, washers, brackets etc, as required for installation on wall / structures/ stanchions/ pedestals.
8. All junction boxes shall be provided with 20% spare cable entries (minimum 1 no.) and terminals. All spare holes shall be covered with metallic plugs.
9. Cable glands and plugs shall be nickel plated brass /SS material. For corrosive & wet applications, these shall be of FRP material.
10. All junction boxes shall be provided with double compression glands and will be threaded to junction boxes.
11. JB shall have provision for keeping terminal details of JB inside the junction box.

© 2022 MECON Limited All rights reserved

17. INSTALLATION OF INSTRUMENTS

1. For installation of instruments and primary sensors, standards practice of instrumentation according to the international standard shall be followed.
2. For installation of any kind of special type of instrument/ sensor manufacturer's recommendation for installation shall be followed.
3. Plugging of extra holes in JBs, panels, cabinets, etc., plugging of extra holes for conduits, filling up the conduits & conduit opening with water proof sealing compound shall be done after completion of erection. This is also applicable for cable entry in any room.

18. CALIBRATION

1. During the loop checking and commissioning, it may sometimes be necessary to recalibrate or reconfigure individual instrumentation equipment on case-to-case basis, to obtain the satisfactory performance of the instrument.
2. In case it is found necessary to recalibrate an instrumentation equipment (for any reason whatever), contractor shall arrange for the same. Generally, recalibration shall be done at 0%, 25%, 50%, 75% & 100% of the measured range for both increasing and decreasing values.
3. In case of HART-enabled equipment like transmitters, wherever necessary, hand-held (i.e., portable) HART configurator shall be used for range-check and reconfiguration of the instrument.
4. The instruments found damaged / defective shall be immediately sent to manufacturer's works for repair or replacement.

19. TESTING & COMMISSIONING

01 Testing

1. During initial flushing of pipelines, in-pipeline equipment like control valves, flowmeters, flow switches, shall be removed and fitted with spool pieces, wherever required. Supply of such spool pieces with flanges is included in the scope of the contractor.
2. For all measurement & control circuits, loop testing shall be carried out. It shall be carried out to check the functional performance of all elements comprising the loop thereby ensuring proper connection of the following:
   a) All elements are properly installed, calibrated and function properly.
   b) All scales are introduced with proper ranges in automation system.
   c) All alarm units and shut down devices are set properly and accomplish their intended purpose.
   d) Controller settings for various modes of operation in automation system (proportional band, reset and rate action) are at nominal values.
   e) The action (direct or reverse or split) of the controller is set as prescribed.
   f) DP transmitter with automation system in the control room shall be loop tested by applying impulse signal to the transmitter by means of a squeeze bulb and a U-tube manometer at the field and performance of the receiver

© 2022 MECON Limited All rights reserved

instruments/display in automation system in the control room shall be checked at 0%, 25%, 50%, 75% and 100% FS inputs in both ascending & descending modes..

g) Pressure transmitter with automation system in the control room shall be loop tested using a dead weight tester and a standard gauge with accuracy better than + 0.1% at field and performance of receiver /display in automation system in the control room shall be checked at 0%, 25%, 50%, 75% and 100% FS inputs in both ascending & descending modes.

h) For temperature loops with resistance thermometers in field and automation system control room, known resistance shall be injected at signal cable near the resistance thermometer in the field through decide resistance box and automation system display shall be checked for input signals of 0%, 25%, 50%, 75% and 100% FS in both ascending & descending modes.

i) For temperature loops with thermocouple in field and automation system display in control room, a known milli-volt signal shall be injected at the compensating cable end in the field from milli-volt simulator and automation system display shall be checked for input signals of 0%, 25%, 50%, 75% and 100% FS in both ascending & descending modes.

j) In case of control loops, the set point of PID controllers shall be adjusted manually from HMI for output of 0%, 25%, 50%, 75% and 100% FS and control valves shall be checked for rate strokes in both ascending & descending modes.

k) Alarm system shall be checked by simulating abnormal conditions in the field mounted differential pressure switches by shorting the wires at terminals and the function of the alarm system.

3. All equipment required for erection, testing & calibration of instrumentation & automation system shall be brought by Contractor to site, on returnable basis. Quantity of all these items shall be as required to meet the erection schedule. All test & calibrating equipment shall have valid calibration traceable to a certified authority / laboratory.

02. <u>Commissioning</u>

1. This activity shall be planned in consultation with & as per the directives of Client/ Consultant.
2. Before commissioning, loop checking for all the measurement & control loops shall be completed and results shall be recorded in approved formats.
3. Initially, the instrumentation equipment & systems shall be checked & tested to establish their specified performance and to ensure readiness for integrated testing with the automation system and commissioning of the plant. All these results shall be properly documented for records.
4. Subsequently, when the plant units are to be commissioned, Contractor shall actively participate in these activities by providing required manpower in general shift as well as in three shifts round the clock to ensure reliable & trouble-free performance of all the instrumentation equipment & systems supplied by him.
5. All the data/ performance of Instrumentation equipment/ system during commissioning & acceptance tests shall be properly documented & submitted.

© 2022 MECON Limited All rights reserved

20. QUALITY ASSURANCE PLANS (QAP):

Refer Inspection chapter of GTS/TS.

21 ASSET MANAGEMENT

Asset management solution station if has been specified in TS shall have the following features:

01. General

A field device management application solution shall be provided integral to the Automation system. This system shall provide the capability to configure, calibrate, monitor and troubleshoot of intelligent field devices. As a minimum, this system shall provide the following capability:

- Complete device configuration capability for field devices
- Complete capturing of all current and historical device data
- Auditing capability
- Device status & alarm monitoring
- Device template creation
- Device signal tag and device tag search capability
- Conventional I/O and Fieldbus-based support
- On-line help
- Database import / export capability
- Diagnostic add-on capability
- Client / server capability
- OPC (OLE for Process Control) capability

02. Device configuration Requirements

The field device management solution shall be capable of completely configuring the parameters associated with Fieldbus. To insure interoperability, the device configuration functionality shall employ standard Device Description Language (DDL) technology as provided by the Fieldbus. The field device management solution must be capable of completely configuring any Fieldbus device for which a device description has been registered with the Fieldbus. The device configuration capability shall include the following:

- Capability to display all device parameters directly from the field device
- Capability to modify and immediately download any changeable parameter in the field device
- Organization of device parameters in a logical manner on the device display
- A separate display of all process values
- A separate display of device status
- The capability to modify multiple device parameters and apply the changes in a single operation
- Warning messages before any parameter is written to the device
- Capability to configure devices using "drag and drop" technique

© 2022 MECON Limited All rights reserved

03. Device Database

All device management data shall be maintained in the global Automation system database. The database shall maintain the configuration for all present and future devices. Any event affecting the configuration of a device in the system shall be recorded in this database.

04. Device Comparison/Reconciliation

The ability to compare a specific device configuration stored in the Automation system database with the configuration actually stored in the device shall be provided.

05. Auditing Capability

The field device management solution shall include a complete historical auditing capability. Events to be recorded in the Automation system database shall include but not be limited to the following:

- All additions, deletions and changes to device configuration information
- All as-found/as-left test records
- All diagnostic information
- All field device management solution maintenance activities

The audited records shall include but not be limited to the following information:

- Date and time of event
- User initiating the event
- Description of the event
- Reason for the event
- As found/as left values of all modified parameters
-

06. Graphical User Interface

The field device management solution shall have an intuitive graphical interface. The system shall include an "Explorer" type user interface. This interface shall allow the users to access field devices by:

- Area of the system
- Type of device
- Physical location of device on plant network

07. Device Status & Alarm Monitoring

The capability to continually monitor device diagnostic events from selected devices shall be provided. The devices to be monitored shall be easily configurable alongwith required scan time.

08. Calibration

A complete calibration capability shall be provided with the field device management system.

© 2022 MECON Limited All rights reserved

UTKARSHA ALUMINIUM DHATU NIGAM LIMITED

ESTABLISHING FACILITY FOR ALUMINIUM ALLOY MELTING, SLAB CASTING AND FLAT ROLLED PRODUCTS PRODUCTION FACILITY

GENERAL TECHNICAL SPECIFICATION FOR QUALITY SYSTEM, INSPECTION & TEST OF PLANT / EQUIPMENT AT MANUFACTURER'S PREMISES (GS – 05)

MECON LIMITED
RANCHI - 834002

No. MEC/S/11/35/Q7R6/GTS/01/R0 **JUNE' 2022**

LIST OF CONTENTS FOR GS-05

SL. NO.	DESCRIPTION	PAGE NO.
01	GENERAL	2
02	QUALITY SYSTEM REQUIREMENTS	2
03	QUALITY ASSURANCE PLAN	2 to 3
04	CALIBRATION OF MEASURING EQUIPMENT	3
05	TEST CERTIFICATES & DOCUMENTS	3 to 4
06	INTERNAL INSPECTION BY SUCCESSFUL TENDERER / MANUFACTURER	4 to 5
07	MANUFACTURING & INSPECTION SCHEDULE	5
08	METHOD OF UNDERTAKING INSPECTION & TESTING BY MECON/CLIENT	5 to 6
09	OBLIGATIONS OF SUCCESSFUL TENDERER	6 to 7
10	STAMPING AND ISSUE OF INSPECTION DOCUMENTS	7
11	GENERAL CLAUSES	7
ENCLOSURES:		
i)	Form No. 11.20.(DQM)F-09 Ed.3 Rev.1 - QAP for Structural & Mechanical Equipment	
ii)	Form No. 11.20.(DQM)F-10 Ed.3 Rev.1 - QAP for Electrical Equipment	
iii)	Form No. 11.20.(DQM)F-11 Ed.3 Rev.1 - QAP for Refractory Materials	
iv)	Annexure- 1 – User manual for IMS	

© 2022 MECON Limited All rights reserved

1.0 GENERAL

1.1 Inspection & testing of plant & equipment shall be witnessed by MECON / CLIENT as per approved QAP at the works of successful tenderer during manufacturing and / or on final product to ensure conformity of the same with the acceptable criteria of technical specifications, approved drawings, manufacturing drawings and applicable national / international standards.

2.0 QUALITY SYSTEM REQUIREMENTS

The successful tenderer must recognise the importance of quality and follow defined quality programme in all stages of. manufacturing and quality control activities of the product. Contractor must define and implement the tasks and controls that will provide needed assurance, in case manufacturing of product is sub-contracted either partly or fully and/or for the procured components of the product. All bought-out equipment or component shall be procured from preferred vendor list of concerned project.

MECON / CLIENT reserve the right to verify the quality programme of tenderer & its

vendors/sub- vendors to assure the effectiveness of the programme to meet the intended

and specified quality of the product.

3.0 QUALITY ASSURANCE PLAN (QAP)

3.1 The successful tenderer shall furnish Quality Assurance Plan (QAP) for all equipment in respective packages after finalization of billing schedule / equipment identification number for MECON's approval at least one month prior to start of manufacturing in accordance with clause 3.2 and 3.3 of this chapter.

3.2 QAP shall be prepared & furnished separately by Contractor in Form Nos. 11.20(DQM)F-09,10,11 Ed.3 Rev 1 (specimen blank enclosed) for structural, mechanical, electrical, instrumentation and refractory items respectively , including major bought-out items. QAPs must be submitted in requisite sets as per contract for approval and shalll be duly stamped and signed by the successful tenderer. Also, column no. 4,5 & 7 of QAP formats are tentative and for reference purpose only. QAP submitted in any format other than those mentioned above will not be accepted.

3.3 The successful tenderer shall submit copies of P.O., Sub-P.O., T.S., approved GA drawings/ data sheets & detailed manufacturing drawings(if asked for) as backup reference materials for scrutiny & final approval of QAP by MECON. All billable items as per approved billing schedule of same category (i.e mechanical, electrical, structural, refractory etc) shall preferably be submitted in a single lot, serial wise, to avoid unnecessary delay in the process of QAP Approval.

3.4 Inspection and test requirements shall be decided with due consideration of factors like safety, duty cycle, operating conditions, equipment life, environmental conditions, place of installation and statutory regulations, as applicable, for a particular equipment. Any, additional type or special tests or routine tests if found necessary to establish the intended

© 2022 MECON Limited All rights reserved

quality after detailed engineering, then same have to be incorporated in the QAP without any commercial implication.

3.5 QAPs shall be prepared by the successful tenderer in consultation with their Sub-contractors / Manufacturers to avoid any complicacy later .

3.6 Soft copies may be forwarded in advance for intimation. However, hard copies shall be submitted in requisite sets to enable Client/MECON to forward comments if any.

3.7 Approval of QAP does not give approval of make. Make shall be as per contract.

4.0 CALIBRATION OF MEASURING EQUIPMENT

4.1 All the measuring equipment used for inspection & testing shall be of appropriate accuracy class and shall have valid calibration certificate with traceability to national standards of NPL / NABL accredited laboratories with unbroken chains of comparison. The calibration certificates shall be submitted to MECON/ CLIENT for review prior to inspection.

Calibration certificate shall also indicate reference no. of calibration standards calibrated by NPL / NABL accredited laboratories and copies of such calibration certificates of calibration standards shall be furnished in the compiled dossiers of inspection/test results if asked for.

4.2 In case valid calibration certificates are not available, inspection may not be carried out using uncalibrated instruments. Successful tenderer/contractor shall be responsible for any delay due to re-inspection / revisit.

5.0 TEST CERTIFICATES AND DOCUMENTS

5.1 For each of the items/equipments offered for inspection, following test certificates and documents as per approved QAP in requisite copies, duly endorsed by the Manufacturer and successful tenderer/contactor with appropriate linkage to project, purchase order and acceptance criteria etc. shall be submitted to MECON/ CLIENT.

i) Raw materials identification & physical and chemical test certificates for all materials used in manufacture of the equipment.

ii) WPS, PQR & WPQ documents as per applicable code.

iii) Details of stage-wise inspection & rectification records for fabricated items, castings, forgings and machined articles if asked for by MECON/Client.

iv) Control dimension chart with records of alignment, squareness etc.

v) Manufacturer's material and performance/relevant test certificates for all bought-out items.

vi) Details of heat-treatment and stress relieving charts as per specification.

vii) Non-Destructive Test reports as per respective code carried out by NABL

© 2022 MECON Limited All rights reserved

accredited laboratory.

viii) Static/dynamic balancing certificate for rotating components/machines.

ix) Hardness test certificate.

x) Pressure / Leakage Test Certificates.

xi) Performance Test Certificates for all characteristics.

xii) Routine / Type / Calibration /Acceptance / Special tests (Type Tests etc) certificates for electrical/ power electronics/ automation/ instrumentation items as identified in QAP. Furnishing valid type test certificate for similar design of above items is mandatory until unless exemption is granted specifically in technical specification for any item. In case, type test certificate of similar design is not available, successful tenderer shall organize to carry out such tests at his cost without affecting the project schedule.

xiii) Surface preparation and painting certificates.

xiv) Certificates from competent authority for the items coming under statutory regulations (IBR/ FM/ UL/ CMRI/ NEPA/ Weights & Measures etc.).

xv) Environmental test reports for electronics/ automation items.

5.2 Where physical and chemical test certificates of raw material are not available, the successful tenderer/Sub-contractor shall arrange to have specimens and test samples of the materials, tested in NABL accredited laboratory at his cost and submit the copies of test results in requisite numbers to MECON/CLIENT for review. Number of test samples against each heat/cast/lot or batch of materials, as applicable shall be as per relevant Indian or International Standards. This is admissible only if specific makes are not indicated in the contract.

6.0 INTERNAL INSPECTION BY SUCCESSFUL TENDERER/ MANUFACTURER

6.1 Inspection and tests shall be carried out by Contractor and Manufacturer in accordance with approved drawings/datasheet/material specification/T.S/P.O., relevant standards (BIS/ASME/IEC/DIN/API etc.) and approved QAP. Records shall be maintained for each inspection and test carried out and signed documents shall be submitted to CLIENT/MECON for verification.

6.2 The successful tenderer shall carry out their internal inspection and obtain clearance from statutory bodies e.g. IBR, CCE, TAC, Weights & Measures, safety (NEPA/ UL/ FM etc.), IE rules, CMRI etc. prior to offering any equipment for CLIENT/MECON's inspection in accordance with approved QAP.

6.3 The successful tenderer/ Manufacturer shall identify all the inspected equipment/component/raw materials & shall maintain the record of status of inspection viz. inspected & found acceptable, require rectification/rework, rejected etc.

© 2022 MECON Limited All rights reserved

6.4 The successful tenderer shall establish and maintain procedures to ensure that the product that does not conform to specified requirements, is prevented from inadvertent use or supply/ installation. The description of non-conformity that has been accepted subsequently by MECON/ CLIENT by concession and/or of repairs, shall be recorded.

6.5 Where facilities for testing does not exist in the successful tenderer / Sub-contractor's laboratories or in case of any dispute, samples and test pieces shall be drawn by the successful tenderer/Sub-contractor in presence of MECON / CLIENT and sealed sample shall be sent to any NABL accredited laboratory for necessary tests at former's own cost.

6.6 The MECON / CLIENT shall have the right to be present and witness all tests being carried out by the successful tenderer / Sub- contractor at their own laboratory or approved laboratories. Also, the Inspection Agency shall reserve the right to call for confirmatory test on samples, at his discretion.

Repaired and reworked product shall be offered for re-inspection to MECON/ CLIENT along-with records of corrective action taken.

7.0 MANUFACTURING AND INSPECTION SCHEDULE

Successful tenderer shall submit the schedule for manufacturing and inspection indicating equipment / components, sub- assembly/ assembly, date of approval of drawings / data sheets, address of manufacturer with contact person and scheduled date of inspection. Such reports shall be submitted to respective MECON Inspecting Offices with a copy to Inspection Co- ordinating Office once in a month. These monthly reports shall state the planning for next three months. Submission of first reports must commence one month prior to commencement of manufacturing activities of the product.

8.0 METHOD OF UNDERTAKING INSPECTION & TESTING BY MECON/ CLIENT

8.1 Inspection call shall be given only on readiness of the equipment/ assembly/ sub-assembly and after approval of all relevant drawings and QAP. Client/MECON shall be given 14 working days notice period to organize inspection for indigenous items and 30 working days notice period for imported items after receipt of hard copies of inspection call. In case, equipment/ assembly/ sub-assembly offered for inspection are found not ready on or after proposed date, Inspection Memo shall be issued then and there and the call shall be cancelled. All the cost of visit of Client/MECON's engineer shall have to be borne by the successful tenderer. Photographic evidence to support readiness of material may be required to be furnished along with fresh inspection call.

If the equipment/assembly / sub-assembly after inspection found not acceptable, requiring rework or involve MECON's re- inspection, Successful tenderer/contractor shall be responsible for any delay due to re-inspection / revisit.

8.2 Inspection call shall be raised to MECON through IMS (Inspection Management System). Soft copy of all documents like test Certificates, Internal Inspection Reports, P.O., Sub-P.O., T.S., Approved QAP, approved GA drawings/ data sheets/manufacturing drawings and all other relevant certificates as per approved QAP shall be attached with inspection call in IMS. All TC's shall be signed and endorsed by successful tenderer. Inspection calls without above documents shall be treated as invalid and be liable for rejection. Also, the hard copy comprising of all documents along with signed and stamped inspection call shall be submitted to Counsultant/ Client for further processing. Scrutinizing

© 2022 MECON Limited All rights reserved

of call documents shall start after receipt of hard copies of inspection call and shall be processed within 14 working days.

IMS user manual and vendor registration process/forms are clearly demonstrated in attached ANNEXURE-1.

8.3 The successful tenderer shall offer substantial quantities of items for inspection considering economical aspect of inspection with respect to size of order.

8.4 On receipt of the Inspection call, pertaining to particular package / equipment / item, Inspection& QA group of MECON (Co-ordinating office for Inspection activities) shall organize inspection visit or will issue Inspection assignment to other MECON's office (based on location of vendor's manufacturing works / relevant job expertise) as per approved QAP.

8.5 For items where inspection has been waived as per approved QAP, calls shall be processed on the basis of document review within 14 days, upon receipt of complete hard copy documents.

8.6 Observation/ Comments if any, forwarded by client/MECON through IMS / mail to be complied within 1 month from the date of such comments. In case the compliance is not submitted within 1 month by successful tenderer, inspection call shall be liable to be cancelled. New inspection call shall be raised as per regular inspection calls in accordance with approved QAP.

8.7 In absence of complete documents viz. relevant Approved QAP, Approved Drawing / datasheet / Technical Specification, manufacturer's test reports, inspection call will be commented / sent for clarification through IMS. Compliance submitted shall be reviewed within 14 working days by MECON/ Client.

9.0 OBLIGATIONS OF SUCCESSFUL TENDRER

9.1 Inspecting Engineer of MECON/ Client shall be provided with all facilities and full & free access to manufacturer premises at any time, during contract period by successful tenderer / contractor, to facilitate inspector to carry out inspection & testing of the product during and/or after manufacturing of the same.

9.2 The successful tenderer shall nominate a Representative / Co-ordinator to liaison with MECON/ CLIENT on all inspection matters. Representative of successful tenderer shall be present during all inspection at Sub-Contractor's works.

9.3 The successful tenderer shall comply with instructions of MECON/ CLIENT fully with promptitude.

9.4 The successful tenderer shall provide all instruments, tools, necessary testing and other inspection facilities to MECON / CLIENT free of cost for carrying out inspection.

9.5 The cost of testing welds by ultrasonic, radiographic and dye penetration tests etc. in the fabrication workshop shall be borne by the successful tenderer .These tests need to be witnessed & approved by ASNT/ISNT Level-II qualified NDT personals

© 2022 MECON Limited All rights reserved

9.6 The successful tenderer shall ensure that the equipment / assembly / component of the plant and equipment required to be inspected, are not dismantled or dispatched before inspection.

9.7 The successful tenderer shall not offer equipment for inspection in painted condition

unless otherwise agreed in writing by MECON/ CLIENT.

9.8 The successful tenderer shall ensure that equipment and materials once rejected by the MECON/CLIENT, are not re-used in the manufacture of the plant and equipment. Where parts rejected during inspection have been rectified as per agreed procedures laid down in advance, such parts shall be segregated for separate inspection and approval, before being used in the work.

10.0 STAMPING AND ISSUE OF INSPECTION DOCUMENTS

10.1 Inspection Memo(IM):- For items, which do not conform to Technical Specification in one or more quality characteristics requiring rectification / rework, Inspection Memo [Form No.-11.20(DQM)F-18] shall be issued indicating therein the details of observation & remarks. All the non-conformities with respect to specification of the product shall be indicated in the Inspection Memo for further quality control by successful tenderer.

10.2 Inspection Certificate(IC):- On satisfactory completion of final inspection & testing, all accepted plant & equipment shall be stamped suitably and Inspection Certificate[Form No.11.20(DQM)F-19] shall be issued by the MECON for the accepted items.

10.3 Inspection Waiver Certificate(IWC):- MECON shall release Inspection Waiver Certificate [Form No. 11.20(DQM)F-20] for the items, which are identified under waiver category in the approved QAP, upon verification of all inspection & test reports as indicated in the QAP.

11.0 GENERAL CLAUSE

11.1 Inspection & tests carried out by MECON / CLIENT shall not absolve the responsibility of the successful tenderer/ Manufacturer to provide acceptable product as per the terms of contract nor shall it preclude subsequent rejection.

11.2 CLIENT/ MECON reserve the right to inspect any product at any stage of manufacturing beyond pre-identified stages and hold point

© 2022 MECON Limited All rights reserved

FORM NO. 11.20 (DQM) F-09, Ed.-3 REV-1

	CONTRACTOR	*	QUALITY ASSURANCE PLAN	WORK ITEM NO.	*
	ORDER NO. & DATE	*	FOR	PROJECT	*
	SUB - CONTRACTOR		STRUCTURAL & MECHANICAL EQUIPMENTS	PACKAGE NO.	*
	ORDER NO. & DATE			PACKAGE NAME	*

INSTRUCTIONS FOR FILLING UP :

1 QAP shall be submitted for each of the equipment separately with break up of assembly / sub-assembly & part/component or for group of equipment having same specification.

2 Use numerical codes as indicated for extent of inspection & tests and submission of test certificates & documents. Additional codes & description for extent of inspection & tests may be added as applicable for the plant and equipment.

3 Separate identification number with quantity for equipment shall be indicated wherever equipment having same specification belonging to different facilities are grouped together.

4 Weight in tonnes (T) must be indicated under column 5 for each item. Estimated weights may be indicated wherever actual weights are not available.

ABBREVIATIONS USED :

RS: RANDOM SAMPLING
CONTR : CONTRACTOR
MFG : MANUFACTURER
W : WITNESS
R: REVIEW
RS1: One/type/Size/Lot
RS2: 10%/type/Size/Lot

CODES FOR EXTENT OF INSPECTION, TESTS, TEST CERTIFICATES & DOCUMENTS :

Code Description

1. Visual(Welding etc.)
2. Dimensional
3. Fitment & Alignment
4. Physical Test(Sample)
5. Chemical Test (Sample)
6. Ultrasonic Test
7. Magnetic Particle Test(MPT)
8. Radiography test
9. Dye Penetration Test
10. Metallographic Exam.
11. Welder's Qualification & Weld Procedure Test
12. Approval of Test and Repair Procedure
13. Heat Treatment
14. Pressure Test
15. Leakage test
16. Balancing
17. Vibration Test
18. Amplitude test

Code Description

19. Sponge test
20. Dust/Water Ingress test
21. Friction Factor Test
22. Adhesion Test
23. Performance Test/ Characteristic curve
24. No. Load/Free running Test
25. Load/Overload Test
26. Measurement of speeds
27. Accoustical test
28. Geometrical Accuracy
29. Repeatability and Positioning Accuracy
30. Proving Test
31. Surface Preparation
32. Manufacturer's Test Certificate for bought out items
33. IBR/Other statutory agencies compliance certificate

Code Description

34. Internal Inspection report by Contractor
35. Hardness test
36. Spark test for Lining
37. Calibration
38. Safety device test
39. Ease of Maintenance

D1. Approved GA drawings
D2. Information and other reference drg / stamped drgs released for mfg.
D3. Relevant catalogues
D4. Bill of Matl./ item no./ identification.
D5 Matchmark details
D6 Line/Layout diagram
D7 Approved erection procedures
D8 Unpriced sub P.O.with specification and amendments, if any
D9. Calibration Certificate of all measuring instrument and gauges.
D10 Guarantee certificate

	EQUIPMENT DETAILS						INSPECTION AND TESTS								
							Raw Material and Inprocess stage Inspection			Final Inspection / Test by			Test Certificates & documents to be submitted to MECON	Acceptance Criteria Standards/IS/BS/ ASME/Norms and Documents	REMARKS/ SAMPLING PLAN
Sl. No.	Description (with equipment heading,place of use and brief specification)	Identification No.	Quantity No / M	Quantity T	Manufacturer's Name and Address	Expected Schedule of Final Inspn	MFR	CONTR	MECON	MFR	CONTR	MECON/CLIENT			
1	2	3	4	5	6	7	8	9	10	11	12	13	14	15	16
*	*		*	*						*	*	*	*	*	

*** : Mandatory Field**

for MECON (Stamp & Signature)

For Contractor and manufacturer (Stamp & Signature)

(QAP No. to be allotted by MECON)
NO. **REV. :-**
SHEET : of

CONTINUATION SHEET

FORM NO. 11.20 (DQM) F-09, Ed.-3 REV-1

	EQUIPMENT DETAILS						INSPECTION AND TESTS								
Sl. No.	Description (with equipment heading,place of use and brief specification)	Identification No.	Quantity		Manufacturer's Name and Address	Expected Sche-dule of Final Inspn	Raw Material and Inprocess stage Inspection			Final Inspection / Test by			Test Certificates & documents to be submitted to MECON	Acceptance Criteria Standards/IS/BS/ ASME/Norms and Documents	REMARKS/ SAMPLING PLAN
			No / M	T			MFR	CONTR	MECON	MFR	CONTR	MECON			
1	**2**	**3**	**4**	**5**	**6**	**7**	**8**	**9**	**10**	**11**	**12**	**13**	**14**	**15**	**16**

NOTES to Contractor and / or Manufacturer:

(1) Ultrasonic test of plates (lamination check) will be done as per ASTM A-435 (or equivalent) for equal to and above 20mm thick plate.
(2). Ultrasonic test of forged & Rolled rounds will be done as per ASTM A - 388 (or equivalent) for equal to and above 50 mm dia round and acceptance standard to be mutually agreed upon.
(3). All the relevant test reports/certificates shall be submitted during inspection.
(4) Dye penetration test shall be as per Art - 24, Sub section B, code SE 165, ASME Section - V.
(5) All NDT - DPT / UT / RT / MPT/ Leak test / pressure test of weld joints are to be carried out wherever drawing / TS calls for as per applicable standards.
(6) Mill TC for major raw materials to be submitted. In absence of which physical & chemical testing reports will be submitted from NABL accredited laboratory.
(7).WPS/PQR/WPQ to be submitted for review wherever required. All welding shall be done by qualified welders. Duly endorsed documents will be submitted to MECON.
(8) Electrical & refractory items / equipments coming under this QAP should be followed as per relevant electrical & refractory QAP.
(9) Column '14' will be inclusive for all the inspection check points under column 'Inspection & Tests' (Column No. 8-13) and all documents of (Column 15) Acceptance Criteria.
(10). All statutory items including CCOE / IBR items etc. shall be generally under waiver category of MECON. Inspection documents for such items will be submitted for review in accordance with the reference codes.
(11). D9 to be submitted for measuring instruments.
(12). Painting shall be done as per approved Specification.
(13). List of equipments with quantity to be furnished under the unit 'set' or 'lot' as annexure along with inspection call.
(14). Manufacturer's 'Quality Control Procedure' shall be submitted along with inspection call, wherever in existence.
(15) Only type test certificate of same design and same Material of Construction of equipment to be sumbmitted, wherever required.
(16) All the manufacturers shall be from prefered make list of General Technical Specification (GTS) / Contract Technical Specification (CTS) / Approved drawing/datasheet.
(17) Relevant Tests, required as per Approved- drawing / technical datasheets / relevant standards /codes/procudure; to be carried out by Manufacturer and/or Contractor (as applicable) and reports shall be submitted.
(18) Contractor/Manufacturer's scope is not limited to test codes indicated herewith and contractor to ensure compliance to all requirments stipulated in approved drawing/datasheet/TS and CTS.
(19) Correct & proper entry of Billing Schedule / Identification No. and quantity is the sole responsibility of the contractor.
(20) Inspection Call to be raised only after the respective approved drawing / datasheet is submitted by contractor and processed (A / AAN) by MECON.
(21) QAP approval does not give approval of Manufacturer/Vendor.

(QAP No. to be allotted by MECON).
MECON's QAP NO.: **REV. :-**
SHEET : OF

for MECON (Stamp & Signature) **For Contractor and manufacturer (Stamp & Signature)**

FORM NO.11.20(DQM) F-10, Ed.-3 REV-1

	CONTRACTOR	*	QUALITY ASSURANCE PLAN	WORK ITEM NO.	*
	ORDER NO. & DATE	*	FOR	PROJECT	*
	SUB - CONTRACTOR		ELECTRICAL & INSTRUMENTATION EQUIPMENT	PACKAGE NO.	*
	ORDER NO. & DATE			PACKAGE NAME	*

INSTRUCTIONS FOR FILLING UP :

1 QAP shall be submitted for each of the equipment separately with break up of assembly / sub-assembly & part/component or for group of equipment having same specification.

2 Use numerical codes as indicated for extent of inspection & tests and submission of test certificates & documents. Additional codes & description for extent of inspection & tests may be added as applicable for the plant and equipment.

3 Separate identification number with quantity for equipment shall be indicated wherever equipment having same specification belonging to different facilities are grouped together.

4 Weight in tonnes (T) must be indicated under column 5 for each item. Estimated weights may be indicated wherever actual weights are not available.

ABBREVIATIONS USED :

CONTR : CONTRACTOR R : Review

MFR : MANUFACTURER W : Witness

CODES FOR EXTENT OF INSPECTION, TESTS, TEST CERTIFICATES & DOCUMENTS :

Code Description

1. Visual
2. Dimensional
3. Fitment & Alignment
4. Physical Test(Sample)
5. Chemical Test (Sample)
6. Ultrasonic Test
7. Magnetic Particle Test(MPT)
8. Radiography test
9. Dye Penetration Test
10. Measurement of IR Value :
    a) Before HV Test
    b) After HV Test
11. High voltage test/Dielectric test.
12. Routine test as per relevant IS/other standard.
13. Type tests as per relevant IS/ other standard.

Code Description

14. Impulse Test.
15. Partial Discharge Test.
16. Heat run test/Temp. rise test.
17. Enclosure protection Test.
18. Calibration.
19. Noise & Vibration.
20. Test Certificates for bought out components.
21. Tank pressure
22. Paint shade & thickness verification.
23. Short time rating.
24. Operation & functional check.
25. Overspeed Test.
26. Flame proof test
27. Clearance and creepage distance.
28. Acceptance Test
29. Verification of BOM
30. PI Value check
31. Earthing provision & Ferruling Check
32. HV &IR test of BTD, RTD & Space heater
33. Galvanization test
34. Continuity test
35. FRLS test
36. Dynamic balancing test
37. Shaft voltage measurement
38. SFRA test
39. Functional test for RTCP
40. Load/overload test
41. Specific fuel consumption rate check
42. Tan delta test
43. Harmonic test

DOCUMENTS :

D1. Approved L-2 drawings
D2. Approved single line / schematic diagram.
D3. Approved Catalogues / Approved data sheet.
D4. Approved bill of materials.
D5. Unpriced P.O.copy and approved BS copy
D6. Calibration Certificate of all measuring instruments and gauges.
D7 . Approved FAT procedure
D8 . Manufacturer TC /Certificate of compliance
D9 . Inspection report for contractor
D10. Conformity certificate
D11. Gurrantee/Warranty certificate
D12. Compatibility certificate
D13. Screenshot of FAT

	EQUIPMENT DETAILS						INSPECTION AND TESTS								
							Raw Material and Inprocess stage Inspection			Final Inspection / Test by			Test Certificates & documents to be submitted to MECON	Acceptance Criteria Standards/IS/BS/ ASME/Norms and Documents	REMARKS/ SAMPLING PLAN
Sl. No.	Description (with equipment heading,place of use and brief specification)	Identification No./ Billing Schedule No.	Quantity		Manufacturer's Name and Address	Expected Schedule of Final Inspn	MFR	CONTR.	MECON	MFR	CONTR.	MECON			
			No / M	T											
1	2	3	4	5	6	7	8	9	10	11	12	13	14	15	16
*	*		*	*						*	*	*	*	*	

* Mandatory field

for MECON (Stamp & Signature)

For contractor/sub-contractor
(Stamp & Signature)

(QAP No. to be alloted by MECON)	
MECON QAP NO.	REV. :
SHEET : OF	

CONTINUATION SHEET

FORM NO.11.20(DQM) F-10, Ed.-3 REV-1

	EQUIPMENT DETAILS						INSPECTION AND TESTS								
							Raw Material and Inprocess stage Inspection			Final Inspection / Test by			Test Certificates & documents to be submitted to MECON	Acceptance Criteria Standards/IS/BS/ ASME/Norms and Documents	REMARKS/ SAMPLING PLAN
Sl. No.	Description (with equipment heading,place of use and brief specification)	Identification No.	Quantity		Manufacturer's Name and Address	Expected Sche-dule of Final Inspn									
			No / M	T			MFR	CONTR.	MECON/NMDC	MFR	CONTR.	MECON/NMDC			
1	2	3	4	5	6	7	8	9	10	11	12	13	14	15	16

(QAP No. to be alloted by MECON)

MECON QAP NO.

SHEET : OF

REV. :

for MECON (Stamp & Signature)

For contractor/sub-contractor
(Stamp & Signature)

MECON मेकॉन ISO 9001 Company	CONTRACTOR	*	QUALITY ASSURANCE PLAN FOR REFRACTORY MATERIALS	WORK ITEM NO.	*
	ORDER NO. & DATE	*		PROJECT	*
	SUB - CONTRACTOR			PACKAGE NO.	*
	ORDER NO. & DATE			PACKAGE NAME	*

INSTRUCTIONS FOR FILLING UP :

1 QAP shall be submitted for each of the equipment separately with break up of assembly / sub-assembly & part/component or for group of equipment having same specification.

2 Use numerical codes as indicated for extent of inspection & tests and submission of test certificates & documents. Additional codes & description for extent of inspection & tests may be added as applicable for the plant and equipment.

3 Separate identification number with quantity for equipment shall be indicated wherever equipment having same specification belonging to different facilities are grouped together.

4 Weight in tonnes (T) must be indicated under column 5 for each item. Estimated weights may be indicated wherever actual weights are not available.

ABBREVIATIONS USED :

CONTR : CONTRACTOR **R : REVIEW**

MFR : MANUFACTURER **W : WITNESS**

CODES FOR EXTENT OF INSPECTION, TESTS, TEST CERTIFICATES & DOCUMENTS :

Code Description

1. Visual
2. Dimensions and geometry
3. Chemical composition
4. Apparent porosity
5. True specific gravity
6. Bulk density/true density
7. Cold crushing / compressive strength
8. Pyrometric cone equivalent
9. Refractoriness under load
10. Spalling resistance
11. Permanent linear change after heating
12. Modulus of Rupture/ Flexural strength
13. Reversible thermal expansion
14. Resistance to dis-integration effect of carbon monoxide gas.
15. Water absorption
16. Acid resistance
17. Thermal conductivity

Code Description

18. Drying & firing shrinkage
19. Sieve analysis
20. Warpage
21. Drip slag test
22. Permeability test
23. Hydration resistance test
24. Lap joint strength
25. Abrasion resistance
26. Cold bonding strength
27. Oxidation resistance
28. Workability
29. Surface area
30. Corrosion resistance
31. Consistency
32. Tensile strength
33. Max. Service temp.
34. Set / Part assembly
35. Control assembly.
36. Creep Test
37. Flow Test

Code Description

38. Special test
39. Fibre diameter
40. Heat Resistance
41. Recovery after compression
42. Shot Content
43. Moisture Content & Absorption
44. Incombustibility
45. Alkalinity
46. Resistance to Vibration & Jolting
47. Chloride and / or Sulphur content
48. Dimensional stability
49. Water vapour transmission
50. Closed cell content
51. Horizontal burning

DOCUMENTS :

D1. Approved / Reference Drawing / Datasheet with Technical Specification
D2. Dimensional drgs. showing plan, elevation, side view & cross sectional view duly approved.
D3. Approved Acceptance Criteria for Physical attributes & Dimensional Check with tolerances
D4. Approved Test Methodology & Acceptance Criteria for MOR & WORKABILITY of MORTAR
D5. Laboratory Test Report
D6. Dimension Check & Physical Attributes Check Report
D7. Calibration Certificate of all measuring instruments and gauges with indexed list indicating tests.
D8. Copies of sub P.O. with Technical Specification.
D9. Guarantee Certificate
D10. Internal Inspection & Acceptance Report

	EQUIPMENT DETAILS						INSPECTION AND TESTS								
							Raw Material and Inprocess stage Inspection			Final Inspection / Test by			Test Certificates & documents to be submitted to MECON	Acceptance Criteria Standards/IS/BS/ ASME/Norms and Documents	REMARKS/ SAMPLING PLAN
Sl. No.	Description (with equipment heading,place of use and brief specification)	Identification No.	Quantity		Manufacturer's Name and Address	Expected Schedule of Final Inspn	MFR	CONTR	MECON	MFR	CONTR	MECON			
			No / M	T											
1	2	3	4	5	6	7	8	9	10	11	12	13	14	15	16
*	*		*	*						*	*	*	*	*	

* Mandatory field

for MECON (Stamp & Signature)

for contractor and Manufacturer (Stamp & Signature)

(QAP No. to be allotted by MECON)

MECON QAP NO. REV.:

SHEET : OF

CONTINUATION SHEET

FORM NO.11.20(DQM) F-11, Ed.-3 REV-1

	E Q U I P M E N T D E T A I L S						INSPECTION AND TESTS								
							Raw Material and Inprocess stage Inspection			Final Inspection / Test by					
Sl. No.	Description (with equipment heading,place of use and brief specification)	Identification No.	Quantity		Manufacturer's Name and Address	Expected Sche-dule of Final Inspn	MFR	CONTR	MECON	MFR	CONTR	MECON	Test Certificates & documents to be submitted to MECON	Acceptance Criteria Standards/IS/BS/ ASME/Norms and Documents	REMARKS/ SAMPLING PLAN
			No / M	T											
1	2	3	4	5	6	7	8	9	10	11	12	13	14	15	16

NOTES to **Contractor** and / or **Manufacturer:**

1. Bricks (except. insulation) shall be stacked in two rows with access from both sides for lot verification and sampling. 100% bricks (except. insulation) shall be marked with quality code, Lot No., Shape / Item No.
2. For castables, mortars, ramming mixes etc.: Batch No., Date of manufacturing and shelf life shall be mentioned in Test Certificate (TC) and packing bags. Water required for casting / mixing shall be mentioned in TC. In absence of aforementioned information, TC shall be treated as invalid.
3. Manufacturer shall be from approved make list of General Technical Specification (GTS)/Contract Technical Specification (CTS). Relevant documents of approval of make in support of manufacturer shall be furnished along with every inspection call.
4. For conformance of thermal conductivity test of LRB Mattress as per IS:3144, recent Type Test Certificate [of appropriate specimens corresponding to product and density of the material, supplied by a plant] from Govt. Approved Lab (CBRI Roorke / IIT Madras / PIBCO R&D) may be furnished.
5. Column '14' will be inclusive of all the inspection check points under column 'Inspection & Tests' (Column No. 8-13) and all documents of Acceptance Criteria (Column 15).
6. List of items with quantity (in quantifiable unit), duly certified by technical section, to be furnished under the unit 'set' or 'lot' as annexure along with inspection call.
7. Relevant Tests, required as per drawing / technical datasheets / relevant standards /codes; to be carried out by Manufacturer and/or Contractor (as applicable).
8. In case of waiver of any item, Field Inspection (Witness at Manufacturer's works) & Acceptance Report of Contractor is mandatory along with Guarantee Certificate.

REMARKS:

1. Correct & proper entry of Billing Schedule / Identification No. and quantity is the sole responsibility of the contractor.
2. QAP approval does not give approval of Manufacturer/Vendor. Manufacturer shall be as per GTS/CTS.
3. Information furnished under Column no. 4, 5, 7 are notional and indicative only.

for MECON (Stamp & Signature)

for Contractor & Manufacturer (Stamp & Signature)

Project No.	**REV.:**
MECON QAP NO.	
SHEET : OF	

Annexure – 1

User Manual for IMS

1. LOGIN TO WWW.MECONLIMITED.CO.IN

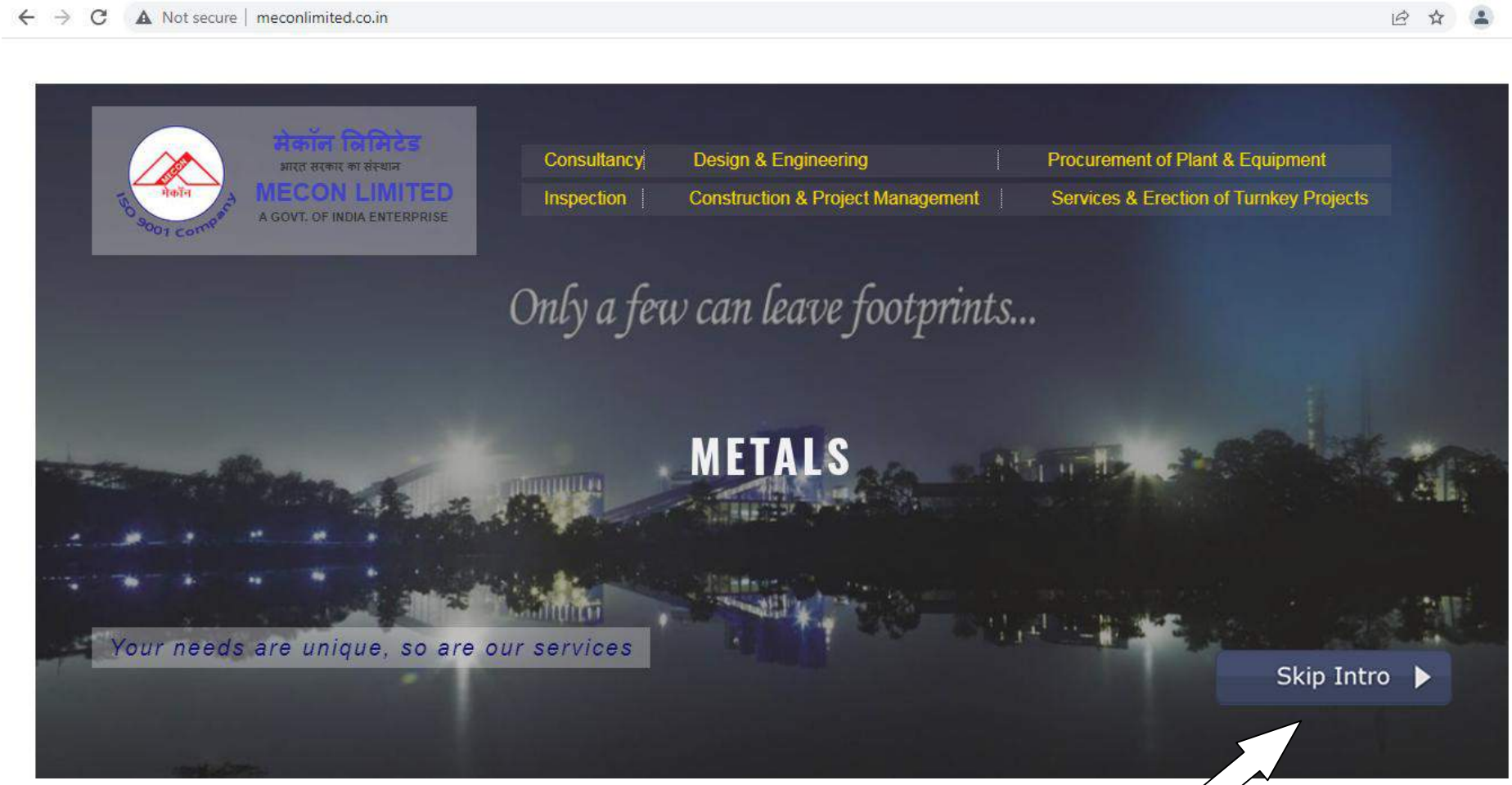

2. CLICK ON Skip Intro

3. SCROLL DOWN THE PAGE AND CLICK ON "CALL FOR INSPECTION"

secure | meconlimited.co.in/Home.aspx

Related links

- Ex-Employee Portal
- Photo Gallery
- Video Gallery
- @Media
- ISPAT Hospital
- Brochure
- Website Policies
- Terms & Conditions
- Disclaimer
- Sitemap
- Help

Vendor Portal

- Calls For Inspection
- Vendor Registration
- Track Your Bill
- Vendor Feedback
- Pay Online
- Banned/Suspended Vendor(s) 695 KB

Important links

- PLI Scheme for Specialty Steel in India - Web portal
- Ministry of Steel
- GOI Web Directory
- National Informatics Centre
- CVC-Integrity ePledge

Projection of Procurement 2020-2025 170 KB

MECON, Ranchi Head Office

MECON Limited, Vivekananda Path, P.O.Doranda,
Ranchi, Jharkhand,
Pin 834002
CIN No: U74140JH1973GOI001199
Fax : 0651-2482189 /2214
Call us at 0651-2483000
Email Id: ranchi@meconlimited.co.in

GST Registration Details 57 KB

TReDS Registration Details 185 KB

eaddata/Downloads/GST_reg_details.pdf

4. After clicking on "Call for Inspection" Login with the ID & PASSWORD provided to you by Inspection Department, MECON.

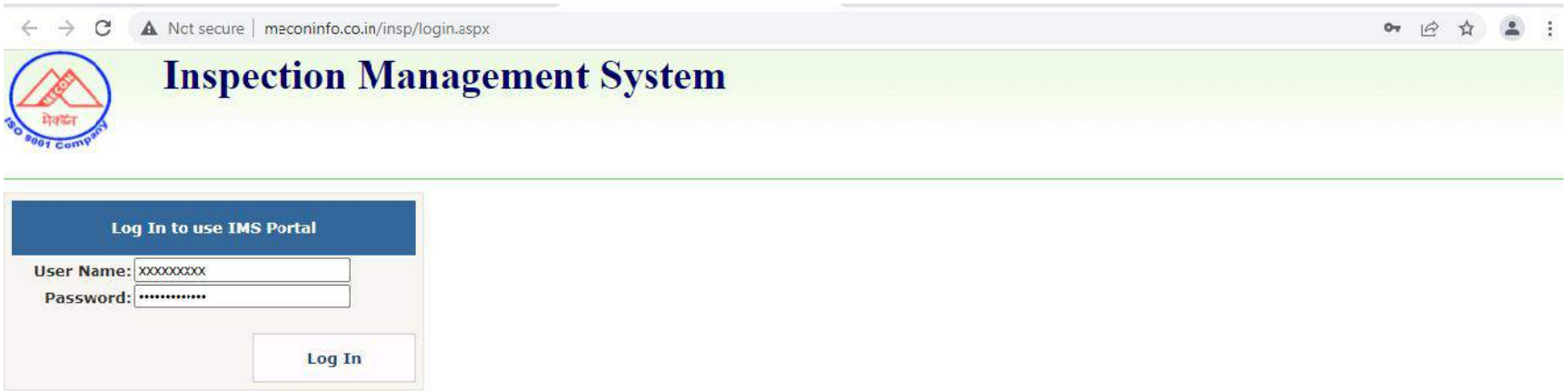

Inspection Management System

Hello DK (Dilip Kumar)

Logout

Open Calls | Under Process | Processed | Rejected

Project Information(s)

1. Project : ZZZZ-Work Item for unknown receipts entry by Finance
2. Package : Pkg01 - Test is ON
3. Contractor : Test IT

To raise fresh call, click to "Add New

Open Call(s)

No. of Open Call(s) : 14 Add New Call

LIST of Inspection Calls raised by

Call No.	Date	Details	Sub Contractor	Contact Person	Type	Status	
qwww	06-Jul-2013	inspection	wwww	444	Final	Call Received	View
12	06-Jul-2013	hghg	hghghg	gfgfg bjhjhjh	Final	Call Received	View
jadjlasj	05-Jul-2013	ads	adasda	asdasf	Final	Call Received	View
sdsdsd	05-Jul-2013	sdsdsd	sdsdsds	dsdsdsds	Final	Call Received	View
EPIL	05-Jul-2013	WAIVER	ADASA	DASDASDAS	Final	Call Received	View
Call 001	05-Jul-2013	NA	M/s XYZ	88888555555	Final	Call Received	View
TMPL/ BSL/030/001	05-Jul-2013	NA	Hirel , Gandhinagar, Phone No- Email	Mishra Phone Email-	Final	Call Received	View
dfdfdf						eived	View
101						eived	View

Do you want Internet Explorer to remember the password for meconlimited.co.in? Why am I seeing this? Yes No

11:13 16-07-2013

http://www.meconlimited.co.in/ | Cyberoam | meconlimited.co.in | meconlimited.co.in

Suggested Sites | Get more Add-ons | Chrome Browser

Open Calls | Back to Prev. Page

Project Information(s)

1. Project : ZZZZ-Work Item for unknown receipts entry by Finance
2. Package : Pkg01 - Test is ON
3. Contractor : Test IT

Call Informations

1. Call No. : 101 (Max 150 chars)
2. Call Date : 16 JUL 2013 *
3. Call Remarks : PUMP M&P KOLHAPUR (Max 500 chars)
4. Sub Contractor details : Mather & Platt (Max 1000 chars)
5. Sub contractor P.O No. : 1012124222352 dtd. 01.05.2012 (Max 100 chars)
6. Inspection place (address) : KOLHAPUR-6545655 MAHARASHTRA Ph. No.: 546556565 (Optional, Max 500 chars)
7. Contact Person with no. : Bhosle M: 9356845296632 sdhdsjdj : 2125453232 bhosle @ matherplatt.com (Max 500 chars)
8. Proposed Date : 20 JUL 2013 *
9. Inspection type : Stage / Final *
10. List of Documents : 1. INDEX 2. QAP (APPROVED) 3. DRAWING / DATASHEET (APPROVED) 4. TECHNICAL SPECIFICATION & PO 5. INTERNAL INSPECTION REPORT (Max 100 chars)
11. Special Notes / Off day : Offday : SUNDAY AS per QAP, item under inspection caetgory of MECON. (Optional, Max 500 chars)

Enter all the details of the inspection call.

11:17 16-07-2013

NOTE : Proposed date of inspection can not be earlier than the inspection call date.

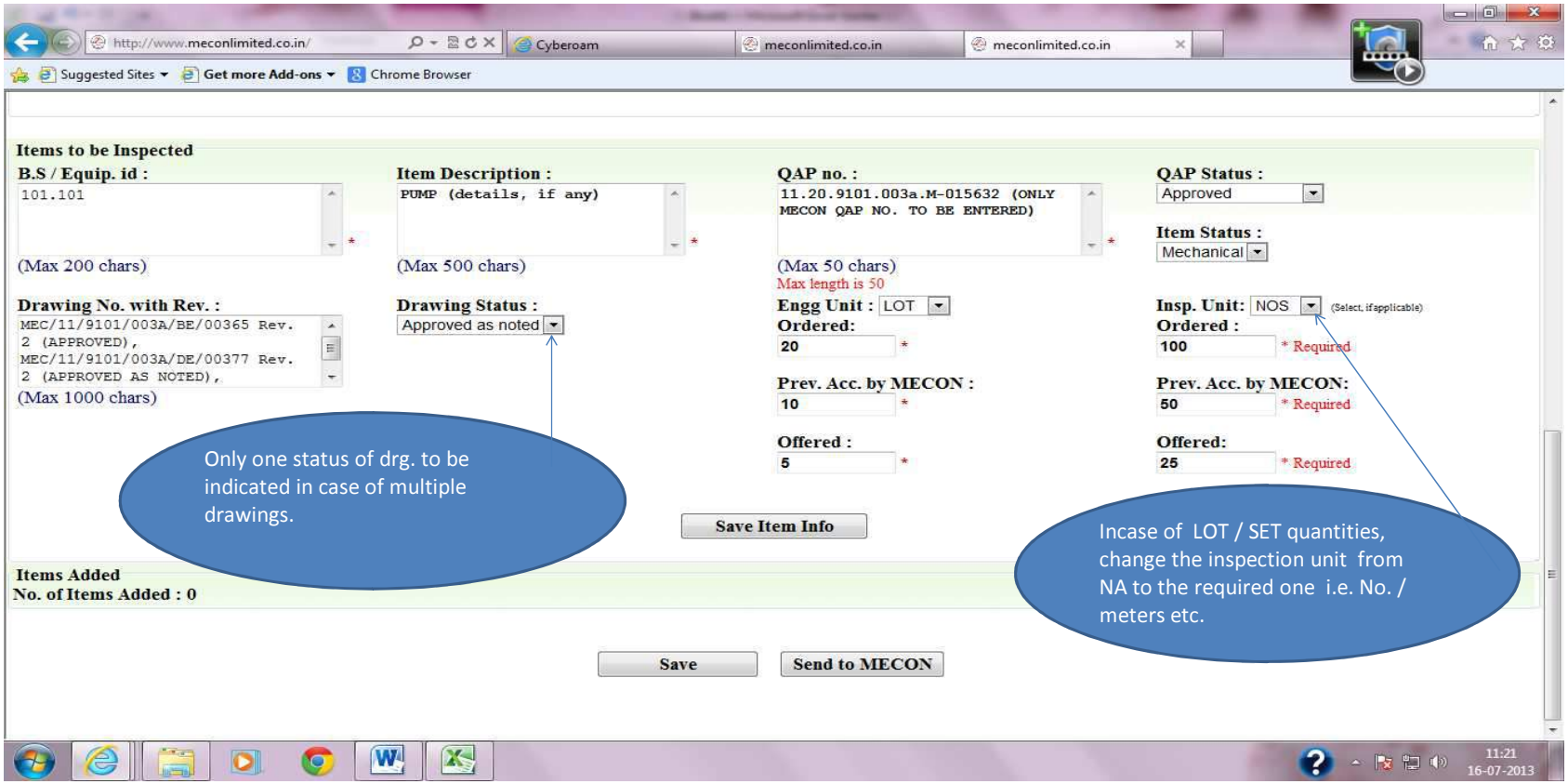

NOTE : For COMMENTED drawings, inspection call can not be raised.

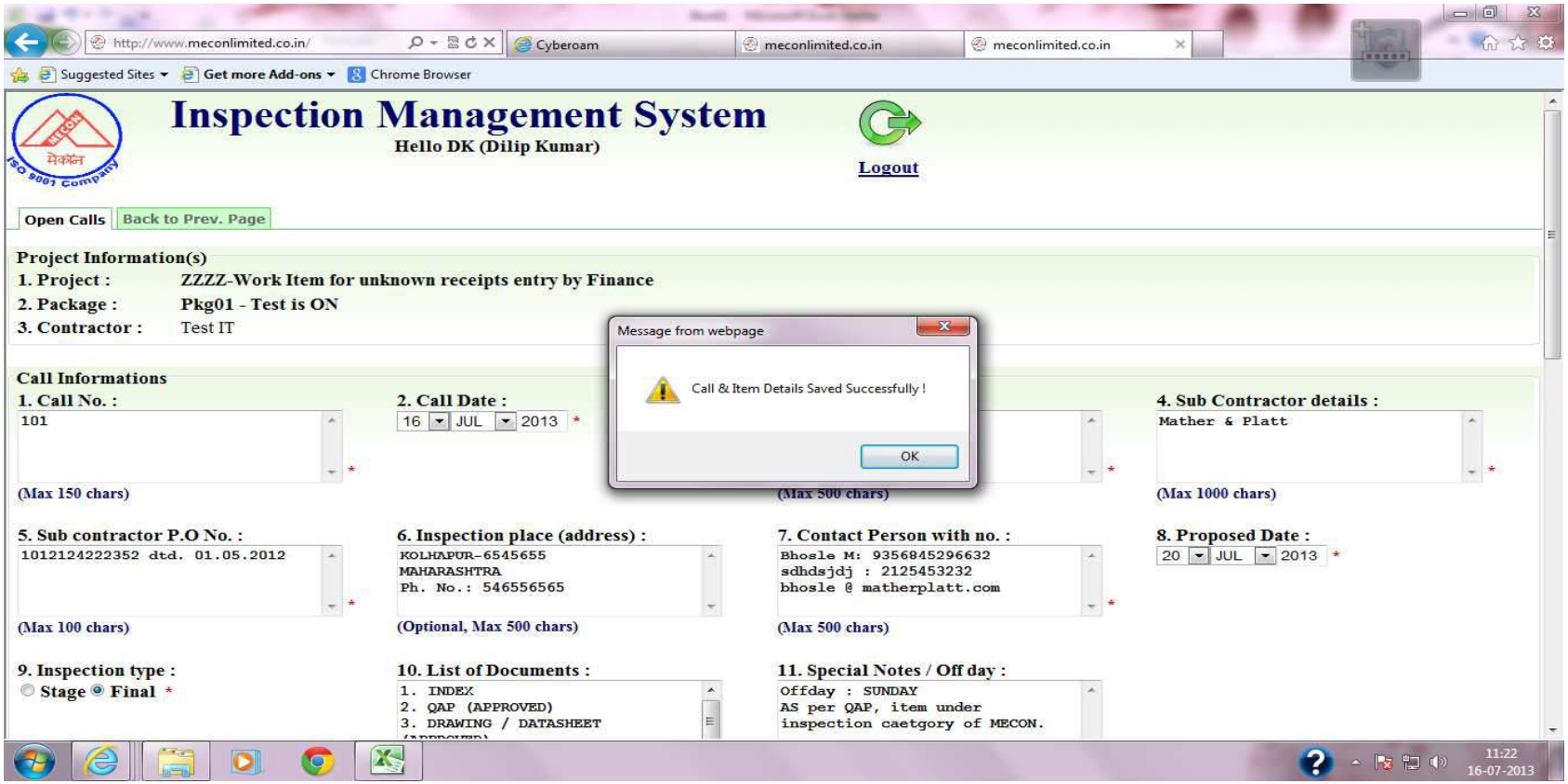

NOTE : After entering all the mandatry fields, kindly "SAVE" the call.

http://meconinfo/insp/AddCall.aspx | Cyberoam | meconlimited.co.in | meconlimited.co.in | meconinfo

Suggested Sites | Get more Add-ons | Chrome Browser

Save Item Info

Items Added

No. of Items Added : 1

B.S /Equip. id	Item Description	Item Type	Dwg. Status	QAP	QAP Status	Engg & Insp. Unit	Ordered	Accepted	Offered		
101.101	PUMP (details, if any)	Mechanical	AAN / MEC/11/9101/003A/BE/00365 Rev. 2 (APPROVED), MEC/11/9101/003A/DE/00377 Rev. 2 (APPROVED AS NOTED),	11.20.9101.003a.M-015632	A	LOT, NOS	20 , 100	10 , 50	5 , 25	Edit	Remove

Attachment

Attachment (if any) : Browse... Add this file

File Name	
11.20.9101.02079.IC.01.pdf	Remove
amd.iwc.9101.01041.IW.01.docx	Remove
fixtures final.xlsx	Remove
IWC No..11.20.9101.01406.IW.01 Dtd.02.05.2013.pdf	Remove
scan.rar	Remove

1. Attach all the relevant documents as indicated in the call.
2. All test reports shall be duly endorsed by the principal contractor.

Save | Send to MECON

11:27
16-07-2013

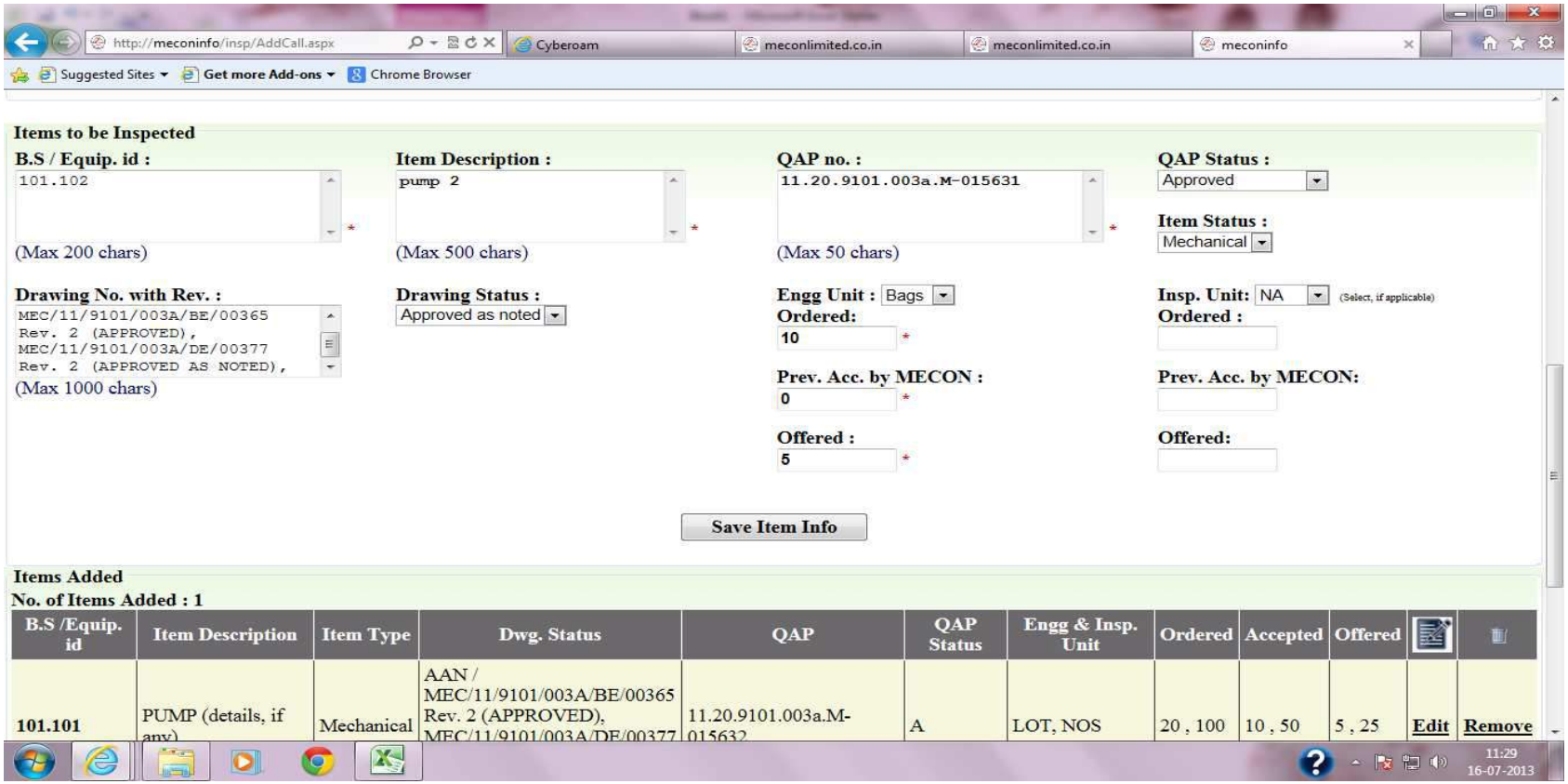

NOTE: The saved item will be shown as above in the Items added portion.

http://meconinfo/insp/AddCall.aspx

Cyberoam | meconlimited.co.in | meconlimited.co.in | meconinfo

Suggested Sites | Get more Add-ons | Chrome Browser

Save Item Info

Call & Item Details Saved Successfully !

Items Added

No. of Items Added : 2

B.S /Equip. id	Item Description	Item Type	Dwg. Status	QAP	QAP Status	Engg & Insp. Unit	Ordered	Accepted	Offered		
101.101	PUMP (details, if any)	Mechanical	AAN / MEC/11/9101/003A/BE/00365 Rev. 2 (APPROVED), MEC/11/9101/003A/DE/00377 Rev. 2 (APPROVED AS NOTED),	11.20.9101.003a.M-015632	A	LOT, NOS	20 , 100	10 , 50	5 , 25	Edit	Remove
101.102	pump 2	Mechanical	AAN / AAN / MEC/11/9101/003A/BE/00365 Rev. 2 (APPROVED), MEC/11/9101/003A/DE/00377 Rev. 2 (APPROVED AS NOTED),	11.20.9101.003a.M-015631	A	Bags	10	0	5	Edit	Remove

Attachment

Attachment (if any) : Browse... Add this file

File Name	
11.20.9101.02079.IC.01.pdf	Remove
amd.iwc.9101.01041.IW.01.docx	Remove
fixtures final.xlsx	Remove
IWC No..11.20.9101.01406.IW.01 Dtd.02.05.2013.pdf	Remove
scan.rar	Remove

Save | Send to MECON

11:30 16-07-2013

NOTE: Multiple items will be shown as above in the Items added portion.

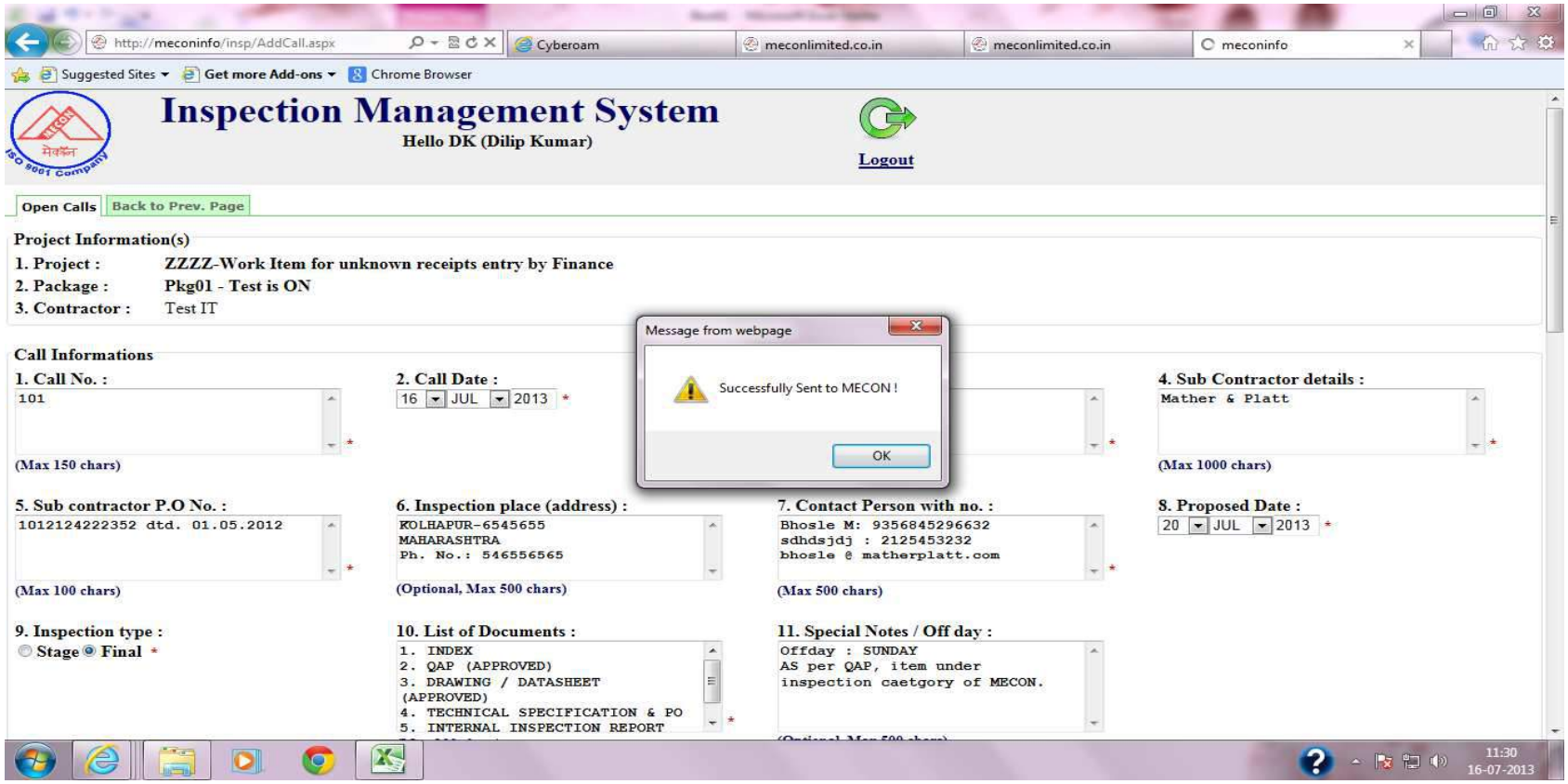

NOTE: Upon entering and saving all details, kindly "SEND to MECON". Please check all the details before sending.

http://meconinfo/insp/AddCall.aspx

Cyberoam | meconlimited.co.in | meconlimited.co.in | meconinfo

Suggested Sites | Get more Add-ons | Chrome Browser

Items Added

No. of Items Added : 2

B.S /Equip. id	Item Description	Item Type	Dwg. Status	QAP	QAP Status	Engg & Insp. Unit	Ordered	Accepted	Offered		
101.101	PUMP (details, if any)	Mechanical	AAN / MEC/11/9101/003A/BE/00365 Rev. 2 (APPROVED), MEC/11/9101/003A/DE/00377 Rev. 2 (APPROVED AS NOTED),	11.20.9101.003a.M-015632	A	LOT, NOS	20 , 100	10 , 50	5 , 25	Edit	Remove
101.102	pump 2	Mechanical	AAN / AAN / MEC/11/9101/003A/BE/00365 Rev. 2 (APPROVED), MEC/11/9101/003A/DE/00377 Rev. 2 (APPROVED AS NOTED),	11.20.9101.003a.M-015631	A	Bags	10	0	5	Edit	Remove

Attachment

Attachment (if any) : Browse... Add this file

File Name	
11.20.9101.02079.IC.01.pdf	Remove
amd.iwc.9101.01041.IW.01.docx	Remove
fixtures final.xlsx	Remove
IWC No..11.20.9101.01406.IW.01 Dtd.02.05.2013.pdf	Remove
scan.rar	Remove

To Print inspection call, click Print Letter.

Save | Send to MECON | Print Letter

Successfully Sent to MECON !

http://meconinfo/insp/AddCall.aspx

11:31 16-07-2013

NOTE: While printing ensure 'POP UPS'are enabled.

http://meconinfo/insp/AddCall.aspx | Cyberoam | meconlimited.co.in | meconlimited.co.in | meconinfo

Suggested Sites | Get more Add-ons | Chrome Browser

Items Add
No. of Iter

B.S /Equ	Status	Engg & Insp. Unit	Ordered	Accepted	Offered		
101.101		LOT, NOS	20 , 100	10 , 50	5 , 25	Edit	Remove
101.102		Bags	10	0	5	Edit	Remove

Attachme
Attachmen

11.20.910
amd.iwc.9
fixtures fi
IWC No..
scan.rar

Letter

http://meconinfo/insp/DK-ACK432.pdf - Windows Internet Explorer

http://meconinfo/insp/DK-ACK432.pdf

Inspection Call Proforma

Form No. 11.20(DQM)F-05/2 Rev. 0
Page 1 of 2

Call Date : 16-Jul-2013
Inspection Call no. : 101 Submitted On : 16-Jul-2013

Project :	ZZZZ - Work Item for unknown receipts entry by Finance...	Package :	Pkg01 - Test is ON
Contractor :	Test IT	Proposed Date :	20-Jul-2013
Sub-Contractor :	Mather & Platt	Sub Cont. Order No. :	1012124222352 dtd. 01.05.2012
Place of Inspection :	KOLHAPUR-6545655 MAHARASHTRA Ph. No.: 546556565	Contact Person :	Bhosle M: 9356845296632 sdhdsjdj : 2125453232 bhosle @ matherplatt.com
Remarks :	PUMP M&P KOLHAPUR	Note/ Off day :	Offday : SUNDAY AS per QAP, item under inspection caetgory of MECON.

List of Items offered for Inspection to MECON :

A=Approved, AAN=Approved as Noted, INF=Information Category

Item identification no. /B.S no.	Description	Drawing No. with revision	Drawing approved status	QAP Status/ No.	Unit	Quantity		
						Ordered	Already Accepted	Offered
101.101	PUMP (details, if any)	MEC/11/9101/003A/BE/00365 Rev. 2 (APPROVED), MEC/11/9101/003A/DE/00377 Rev. 2 (APPROVED AS NOTED)	AAN	A /11.20.9101.003a.M-015632	LOT, NOS	20 100	10 50	5 25

11:33
16-07-2013

http://meconinfo/insp/AddCall.aspx | Cyberoam | meconlimited.co.in | meconlimited.co.in | meconinfo

Suggested Sites | Get more Add-ons | Chrome Browser

Items Add
No. of Iter

B.S /Equ	Status	Engg & Insp. Unit	Ordered	Accepted	Offered		
101.101		LOT, NOS	20 , 100	10 , 50	5 , 25	Edit	Remove
101.102		Bags	10	0	5	Edit	Remove

Attachme
Attachmen

11.20.910
amd.iwc.9
fixtures fi
IWC No..
scan.rar

Letter

http://meconinfo/insp/DK-ACK432.pdf - Windows Internet Explorer

http://meconinfo/insp/DK-ACK432.pdf

		3A/BE/00365 Rev. 2 (APPROVED), MEC/11/9101/00 3A/DE/00377 Rev. 2 (APPROVED AS NOTED),		3a.M-015631				

List of Documents & Test Certificates enclosed in four (4) sets :

1. INDEX
2. QAP (APPROVED)
3. DRAWING / DATASHEET (APPROVED)
4. TECHNICAL SPECIFICATION & PO
5. INTERNAL INSPECTION REPORT
5.

Inspection Call Proforma

Form No. 11.20(DQM)F-05/2 Rev. 0
Page 2 of 2

Call Date : 16-Jul-2013

Inspection Call no.: 101

Submitted On : 16-Jul-2013

For Contractor/Sub-Contractor

Name & Designation with stamp

11:34
16-07-2013

http://meconinfo/insp/Default.aspx | Cyberoam | meconlimited.co.in | meconlimited.co.in | Inspection Management Sy...

Suggested Sites | Get more Add-ons | Chrome Browser

Inspection Management System

Hello DK (Dilip Kumar)

Logout

Open Calls | Under Process | Processed | Rejected

Project Information(s)

1. Project : ZZZZ-Work Item for unknown receipts entry by Finance
2. Package : Pkg01 - Test is ON
3. Contractor : Test IT

Check the status of your call.

Open Call(s)

No. of Open Call(s) : 15 Add New Call

Call No.	Date	Details	Sub Contractor	Contact Person	Type	Status	
qwww	06-Jul-2013	inspection	wwww	444	Final	Call Received	View
12	06-Jul-2013	hghg	hghghg	gfgfg bjhjhjh	Final	Call Received	View
jadjlasj	05-Jul-2013	ads	adasda	asdasf	Final	Call Received	View
sdsdsd	05-Jul-2013	sdsdsd	sdsdsds	dsdsdsds	Final	Call Received	View
EPIL	05-Jul-2013	WAIVER	ADASA	DASDASDAS	Final	Call Received	View
Call 001	05-Jul-2013	NA	M/s XYZ	888888555555	Final	Call Received	View
TMPL/ BSL/030/001	05-Jul-2013	NA	Hirel , Gandhinagar, Phone No- Email	Mishra Phone Email-	Final	Call Received	View
dfdfdf	04-Jul-2013	fdfdf	dfdfdf	dfdfdfdf	Final	Call Received	View
101	03-Jul-2013	TEST EDIT	asas	sassss	Final	Call Received	View
bbbb	01-Jul-2013	bcadghafdghf	sadasdggh	dbvdfg	Final	Call Received	View
6757576	10-Jun-2013	ghghgh	fdhdfhfdh	dfgdgg	Final	Call Received	View
sass	16-Jul-2013	sasas	sasasa	asasas	Final	Sent to MECON	View
101	16-Jul-2013	PUMP M&P KOLHAPUR	Mather & Platt	Bhosle M: 9356845296632 sdhdsjdj : 2125453232 bhosle @ matherplatt.com	Final	Sent to MECON	View
2qeq	10-Jul-2013	etet	yryher	3424512	Final	Sent to MECON	View
2222	04-Jul-2013	tewgw	erqer	22	Final	Sent to MECON	View

11:36
16-07-2013

http://meconinfo/insp/ViewDetail.aspx | Cyberoam | meconlimited.co.in | meconlimited.co.in | meconinfo

Suggested Sites | Get more Add-ons | Chrome Browser

Inspection Management System

Hello DK (Dilip Kumar)

Logout

Call Details | Back to Prev. Page

Project Information(s)

1. Project : ZZZZ-Work Item for unknown receipts entry by Finance
2. Package : Pkg01 - Test is ON
3. Contractor : Test IT

Call Informations

1. Call No. :
101, dated 16-Jul-2013
Print Letter

2. Call Remarks :
PUMP M&P KOLHAPUR

3. Sub Contractor :
Mather & Platt

4. Order No. :
1012124222352 dtd. 01.05.2012

5. Inspection place :
KOLHAPUR-6545655 MAHARASHTRA Ph. No.: 546556565

6. Contact Person :
Bhosle M: 93568452966632 sdhdajdj : 2125453232 bhosle @ matherplatt.com

7. Proposed Time :
20-Jul-2013

8. Inspection type :
Final

9. List of Documents :
1. INDEX 2. QAP (APPROVED) 3. DRAWING / DATASHEET (APPROVED) 4. TECHNICAL SPECIFICATION & PO 5. INTERNAL INSPECTION REPORT 5.

10. Special Note (if any):
Offday : SUNDAY AS per QAP, item under inspection caetgory of MECON.

11. Call Status :
Sent to MECON

12. Status Date :
16-Jul-2013

13. Remarks from MECON

Attachment (if any)

File Name
11.20.9101.02079.IC.01.pdf
amd.iwc.9101.01041.IW.01.docx
fixtures final.xlsx
IWC No..11.20.9101.01406.IW.01 Dtd.02.05.2013.pdf
scan.rar

Items Added
No. of Items Added : 2
A: Approved, AAN: Approved as Noted, INF: Information Category

B.S /Equip. id	Item Description	Item Type	Dwg. Status	QAP	QAP Status	Engg & Insp. Unit	Ordered	Accepted	Offered
101.101	PUMP (details, if any)	Mechanical	AAN / MEC/11/9101/003A/BE/00365 Rev. 2 (APPROVED), MEC/11/9101/003A/DE/00377 Rev. 2 (APPROVED AS NOTED),	11.20.9101.003a.M-015632	A	LOT, NOS	20 , 100	10 , 50	5 , 25
101.102	pump 2	Mechanical	AAN / AAN / MEC/11/9101/003A/BE/00365 Rev. 2 (APPROVED), MEC/11/9101/003A/DE/00377 Rev. 2 (APPROVED AS NOTED),	11.20.9101.003a.M-015631	A	Bags	10	0	5

11:36
16-07-2013

Inspection Management System (IMS)

Samik Sarkar, Design Engineer, Inspection & QA, Ranchi

Tuesday, July 16, 2013

- Administration
- Masters
- Online Portal
  - Users
  - Submitted
  - Rejected
  - Clarification
- Calls
- Assignments
- Certificates
- Query

Calls Submitted Online

Filter Your Search

Select WINO : **Package:** Show Call List

Your inspection call will appear like below in our system.

Calls Submitted

No. of Calls found in this search : **53**

WINO	Package	Call no.	Submitted By	Submitted On	Remarks	Stage	Proposed Time	
9103	084	102	rspjusco84	16-Jul-2013	Waiver catagory	Final	Jul 23 2013	View Call
ZZZZ	Pkg01	sass	DK	16-Jul-2013	sasas	Final	Jul 16 2013	View Call
ZZZZ	Pkg01	101	DK	16-Jul-2013	PUMP M&P KOLHAPUR	Final	Jul 20 2013	View Call
9101	020	L&T/BSP-SP/EI-085	Int20bsp	15-Jul-2013	Inspection Waiver	Final	Jul 15 2013	View Call
Q6QZ	001	Inspection call/Stacker-Reclaimer/92	bhelisg	15-Jul-2013	Waiver category	Final	Jul 15 2013	View Call
9103	091	10016550/1	mbecl91	15-Jul-2013	Inspection of electric hoist	Final	Jul 18 2013	View Call
9103	032	RSP-ROURKELA/GLOBEGAS/13/27/DE/0828	rspglobegas32	15-Jul-2013	Inspection Waiver for DP Type Level Transmitter	Final	Jul 15 2013	View Call
E24F	099	10	bslace099	15-Jul-2013	IWC	Final	Jul 18 2013	View Call
9101	020	L&T/BSP-SP/EI-084	Int20bsp	15-Jul-2013	IMCPs (Intelligent + Conventional)	Final	Jul 19 2013	View Call

11:38
16-07-2013

http://meconinfo// | Cyberoam | meconlimited.co.in | meconlimited.co.in | meconinfo | :::MECON INFOCEN...

Suggested Sites | Get more Add-ons | Chrome Browser

Inspection Management System (IMS)

Samik Sarkar, Design Engineer, Inspection & QA, Ranchi

Tuesday, July 16, 2013

HOME

- Administration
- Masters
- Online Portal
  - Users
  - Submitted
  - Rejected
  - Clarification
- Calls
- Assignments
- Certificates
- Query

Attachements (if any)

File Name	
11.20.9101.02079.IC.01.pdf	Download
amd.iwc.9101.01041.IW.01.docx	Download
fixtures final.xlsx	Download
IWC No..11.20.9101.01406.IW.01 Dtd.02.05.2013.pdf	Download
scan.rar	Download

Process this Call

1. Action Taken : ○ Accept ○ Reject ◉ Clarification Needed

2. Category : ◉ Inspection ○ Waiver

3.Comment :

```
1. Relevant drawings not enclosed.
2. Annexure of QAP not furnished.
3. Documents submitted are unsigned. (Contractor shall ensure that all attached documents are duly
signed by him.)
```

Process

Incomplete / Incorrect documets may lead to following preliminary comments from MECON.

11:41 16-07-2013

http://meconinfo/insp/Default.aspx

Cyberoam | meconlimited.co.in | meconlimited.co.in | Inspection Manage... | :::MECON INFOCENTRE:::

Suggested Sites | Get more Add-ons | Chrome Browser

Inspection Management System

Hello DK (Dilip Kumar)

Logout

Open Calls | Under Process | Processed | Rejected

Project Information(s)

1. Project : ZZZZ-Work Item for unknown receipts entry by Finance
2. Package : Pkg01 - Test is ON
3. Contractor : Test IT

Check the current status change after comments from MECON.

Open Call(s)

No. of Open Call(s) : 15 | Add New Call

Call No.	Date	Details	Sub Contractor	Contact Person	Type	Status	
qwww	06-Jul-2013	inspection	wwww	444	Final	Call Received	View
12	06-Jul-2013	hghg	hghghg	gfgfg bjhjhjh	Final	Call Received	View
jadjlasj	05-Jul-2013	ads	adasda	asdasf	Final	Call Received	View
sdsdsd	05-Jul-2013	sdsdsd	sdsdsds	dsdsdsds	Final	Call Received	View
EPIL	05-Jul-2013	WAIVER	ADASA	DASDASDAS	Final	Call Received	View
Call 001	05-Jul-2013	NA	M/s XYZ	88888555555	Final	Call Received	View
TMPL/ BSL/030/001	05-Jul-2013	NA	Hirel , Gandhinagar, Phone No- Email	Mishra Phone Email-	Final	Call Received	View
dfdfdf	04-Jul-2013	fdfdf	dfdfdf	dfdfdfdf	Final	Call Received	View
101	03-Jul-2013	TEST EDIT	asas	sassss	Final	Call Received	View
bbbb	01-Jul-2013	bcadghafdghf	sadasdggh	dbvdfg	Final	Call Received	View
6757576	10-Jun-2013	ghghgh	fdhdfhfdh	dfgdgg	Final	Call Received	View
101	16-Jul-2013	PUMP M&P KOLHAPUR	Mather & Platt	Bhosle M: 9356845296632 sdhdsjdj : 2125453232 bhosle @ matherplatt.com	Final	Clarification Needed	View
sass	16-Jul-2013	sasas	sasasa	asasas	Final	Sent to MECON	View
2qeq	10-Jul-2013	etet	yryher	3424512	Final	Sent to MECON	View
2222	04-Jul-2013	tewgw	erqer	22	Final	Sent to MECON	View

11:42
16-07-2013

http://meconinfo/insp/AddCall.aspx

Cyberoam | meconlimited.co.in | meconlimited.co.in | meconinfo | :::MECON INFOCENTRE:::

Suggested Sites | Get more Add-ons | Chrome Browser

Inspection Management System

Hello DK (Dilip Kumar)

Logout

Open Calls | Back to Prev. Page

Project Information(s)

1. Project : ZZZZ-Work Item for unknown receipts entry by Finance
2. Package : Pkg01 - Test is ON
3. Contractor : Test IT

Call Informations

1. Call No. : 101 (Max 150 chars)

4. Sub Contractor details : Mather & Platt (Max 1000 chars)

5. Sub contractor P.O No. : 1012124222352 dtd. 01.05.2012 (Max 100 chars)

8. Proposed Date : 20 JUL 2013

9. Inspection type : Stage / Final

10. List of Documents :
1. INDEX
2. QAP (APPROVED)
3. DRAWING / DATASHEET (APPROVED)
4. TECHNICAL SPECIFICATION & PO
5. INTERNAL INSPECTION REPORT
5.
(Max 100 chars)

11. Special Notes / Off day :
Offday : SUNDAY
AS per QAP, item under inspection caetgory of MECON
ALL COMMENTS BY MECON INCORPORATED & RESENT.
(Optional, Max 500 chars)

12. Comment from MECON :
1. Relevant drawings not enclosed. 2. Annexure of QAP not furnished. 3. Documents submitted are unsigned. (Contractor shall ensure that all attached documents are duly signed by him.)

MECON's preliminary comments

Items to be Inspected

B.S / Equip. id : (Max 200 chars)

Item Description : (Max 500 chars)

QAP no. : (Max 50 chars)

Approved

Item Status : Refractory

Drawing No. with Rev. :

Drawing Status :

Engg Unit : Regs

Insp. Unit : NA

Message from webpage

Kindly Verify these informations : B.S No. or Equipment Identification no., Item Description, QAP No., Drawing No. with Revision, Ordered Unit wrt. Engg. unit, Accepted Unit wrt. Engg. Unit, Offered Unit wrt. Engg. Unit,

OK

11:44 16-07-2013

http://meconinfo/insp/AddCall.aspx

Cyberoam | meconlimited.co.in | meconlimited.co.in | meconinfo | :::MECON INFOCENTRE:::

Suggested Sites | Get more Add-ons | Chrome Browser

Inspection Management System

Hello DK (Dilip Kumar)

Logout

Open Calls | Back to Prev. Page

Project Information(s)

1. Project : ZZZZ-Work Item for unknown receipts entry by Finance
2. Package : Pkg01 - Test is ON
3. Contractor : Test IT

Call Informations

1. Call No. : 101 (Max 150 chars)
2. Call Date : 16 JUL 2013
4. Sub Contractor details : Mather & Platt (Max 1000 chars)
5. Sub contractor P.O No. : 1012124222352 dtd. 01.05.2012 (Max 100 chars)
6. Inspection place (address) : KOLHAPUR-6545655 MAHARASHTRA Ph. No.: 546556565 (Optional, Max 500 chars)
8. Proposed Date : 20 JUL 2013
9. Inspection type : Stage / Final
10. List of Documents :
    1. INDEX
    2. QAP (APPROVED)
    3. DRAWING / DATASHEET (APPROVED)
    4. TECHNICAL SPECIFICATION & PO
    5. INTERNAL INSPECTION REPORT
    5.
    (Max 100 chars)
11. Special Notes / Off day : Offday : SUNDAY AS per QAP, item under inspection caetgory of MECON ALL COMMENTS BY MECON INCORPORATED & RESENT. (Optional, Max 500 chars)
12. Comment from MECON : 1. Relevant drawings not enclosed. 2. Annexure of QAP not furnished. 3. Documents submitted are unsigned. (Contractor shall ensure that all attached documents are duly signed by him.)

Message from webpage

Successfully Sent to MECON !

OK

Upon compliance of all preliminary comments, resend to MECON.

Items to be Inspected

B.S / Equip. id : (Max 200 chars)

Item Description : (Max 500 chars)

QAP no. : (Max 50 chars)

Approved

Item Status : Refractory

Drawing No. with Rev. :

Drawing Status :

Engg Unit : Regs

Insp. Unit: NA

11:45 16-07-2013

http://meconinfo/insp/Default.aspx | Cyberoam | meconlimited.co.in | meconlimited.co.in | Inspection Manage... | :::MECON INFOCENTRE:::

Suggested Sites | Get more Add-ons | Chrome Browser

Inspection Management System

Hello DK (Dilip Kumar)

Logout

Open Calls | Under Process | Processed | Rejected

Project Information(s)

1. Project : ZZZZ-Work Item for unknown receipts entry by Finance
2. Package : Pkg01 - Test is ON
3. Contractor : Test IT

Open Call(s)

No. of Open Call(s) : 15 Add New Call

Call No.	Date	Details	Sub Contractor	Contact Person	Type	Status	
qwww	06-Jul-2013	inspection	wwww	444	Final	Call Received	View
12	06-Jul-2013	hghg	hghghg	gfgfg bjhjhjh	Final	Call Received	View
jadjlasj	05-Jul-2013	ads	adasda	asdasf	Final	Call Received	View
sdsdsd	05-Jul-2013	sdsdsd	sdsdsds	dsdsdsds	Final	Call Received	View
EPIL	05-Jul-2013	WAIVER	ADASA	DASDASDAS	Final	Call Received	View
Call 001	05-Jul-2013	NA	M/s XYZ	88888555555	Final	Call Received	View
TMPL/ BSL/030/001	05-Jul-2013	NA	Hirel , Gandhinagar, Phone No- Email	Mishra Phone Email-	Final	Call Received	View
dfdfdf	04-Jul-2013	fdfdf	dfdfdf	dfdfdfdf	Final	Call Received	View
101	03-Jul-2013	TEST EDIT	asas	sassss	Final	Call Received	View
bbbb	01-Jul-2013	bcadghafdghf	sadasdggh	dbvdfg	Final	Call Received	View
6757576	10-Jun-2013	ghghgh	fdhdfhfdh	dfgdgg	Final	Call Received	View
sass	16-Jul-2013	sasas	sasasa	asasas	Final	Sent to MECON	View
101	16-Jul-2013	PUMP M&P KOLHAPUR	Mather & Platt	Bhosle M: 9356845296632 adhdsjdj : 2125453232 bhosle @ matherplatt.com	Final	Sent to MECON	View
2qeq	10-Jul-2013	etet	yryher	3424512	Final	Sent to MECON	View
2222	04-Jul-2013	tewgw	erqer	22	Final	Sent to MECON	View

11:49
16-07-2013

http://meconinfo/insp/Default.aspx

Cyberoam | meconlimited.co.in | meconlimited.co.in | Inspection Manage... | :::MECON INFOCENTRE:::

Suggested Sites | Get more Add-ons | Chrome Browser

Find: 101 | Previous | Next | Options

Inspection Management System

Hello DK (Dilip Kumar)

Logout

Open Calls | Under Process | Processed | Rejected

Project Information(s)

1. Project : ZZZZ-Work Item for unknown receipts entry by Finance
2. Package : Pkg01 - Test is ON
3. Contractor : Test IT

After primary scrutinizing of the documents, your call will be under 'Call recived' .

Open Call(s)

No. of Open Call(s) : 15 | Add New Call

Call No.	Date	Details	Sub Contractor	Contact Person	Type	Status	
101	16-Jul-2013	PUMP M&P KOLHAPUR	Mather & Platt	Bhosle M: 9356845296632 sdhdsjdj : 2125453232 bhosle @ matherplatt.com	Final	Call Received	View
qwww	06-Jul-2013	inspection	wwww	444	Final	Call Received	View
12	06-Jul-2013	hghg	hghghg	gfgfg bjhjhjh	Final	Call Received	View
jadjlasj	05-Jul-2013	ads	adasda	asdasf	Final	Call Received	View
sdsdsd	05-Jul-2013	sdsdsd	sdsdsds	dsdsdsds	Final	Call Received	View

11:51
16-07-2013

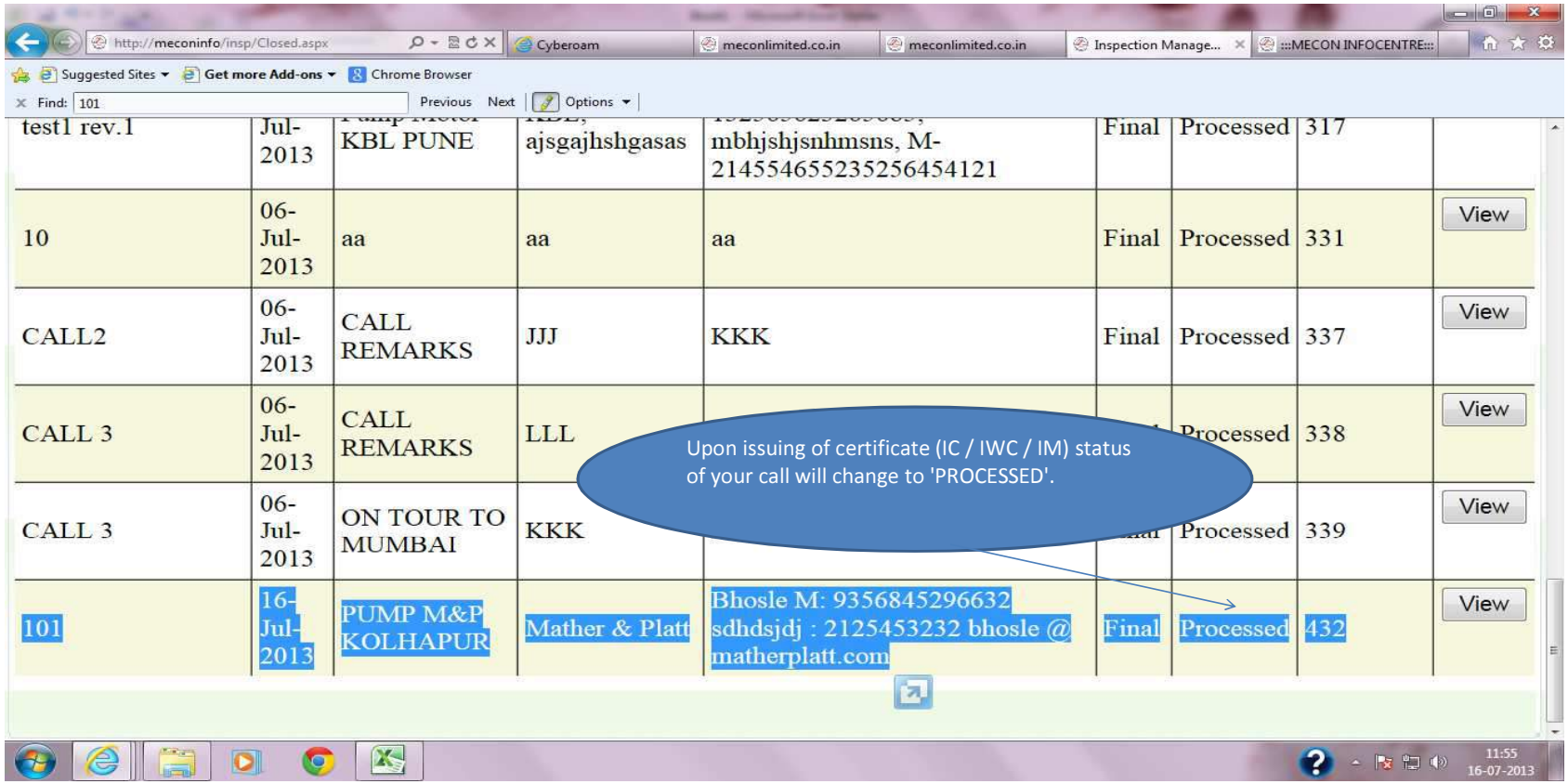
http://meconinfo/insp/Closed.aspx
Cyberoam
meconlimited.co.in
meconlimited.co.in
Inspection Manage...
:::MECON INFOCENTRE:::
Suggested Sites
Get more Add-ons
Chrome Browser
Find: 101
Previous
Next
Options
test1 rev.1
Jul-2013
KBL PUNE
ajsgajhshgasas
mbhjshjsnhmsns, M-214554655235256454121
Final
Processed
317
10
06-Jul-2013
aa
aa
aa
Final
Processed
331
View
CALL2
06-Jul-2013
CALL REMARKS
JJJ
KKK
Final
Processed
337
View
CALL 3
06-Jul-2013
CALL REMARKS
LLL
Processed
338
View
CALL 3
06-Jul-2013
ON TOUR TO MUMBAI
KKK
Processed
339
View
101
16-Jul-2013
PUMP M&P KOLHAPUR
Mather & Platt
Bhosle M: 9356845296632 sdhdsjdj : 2125453232 bhosle @ matherplatt.com
Final
Processed
432
View
Upon issuing of certificate (IC / IWC / IM) status of your call will change to 'PROCESSED'.
11:55
16-07-2013

http://www.meconlimited.co.in/
Cyberoam
meconlimited.co.in
Suggested Sites
Get more Add-ons
Chrome Browser
Find: 101
Previous
Next
Options
Click 'TOOLS' or Type (Alt+X) in Internet Explorer.
CALL FOR INSPECTION
CPGRAMS & CPENGRAMS
हिंदी संस्करण
inal results of Selection of Management Trainee Technical (MTT) through GATE–2013
मेकॉन लिमिटेड
भारत सरकार का संस्थान
MECON LIMITED
(A Government of India Enterprise)
50 Years of Nation Building
Home | About Us | Product & Services | Active Tenders | HR in MECON | Contact Us
Strategic Business Units
Metals
Power
Oil & Gas
Infrastructure
Power Plant-Thermal & Hydel
Transmission & Distribution
Renovation & modernization of Power Plant
Energy Audit
Blowers, TRT, Compressors & Dryers
A House of Engineering Excellence
....Aiming beyond
>> Flash News <<
• VENDOR REGISTRATION
• RIGHT TO INFORMATION ACT 2005
• TRANSPARENCY & INTEGRITY PACT
Copyright © 2008-2009 MECON Limited. All rights reserved.
This site is best viewed in 1024x768 resolution.
Maintained by IT Services Dept, MECON Ltd,Ranchi
14:45
16-07-2013

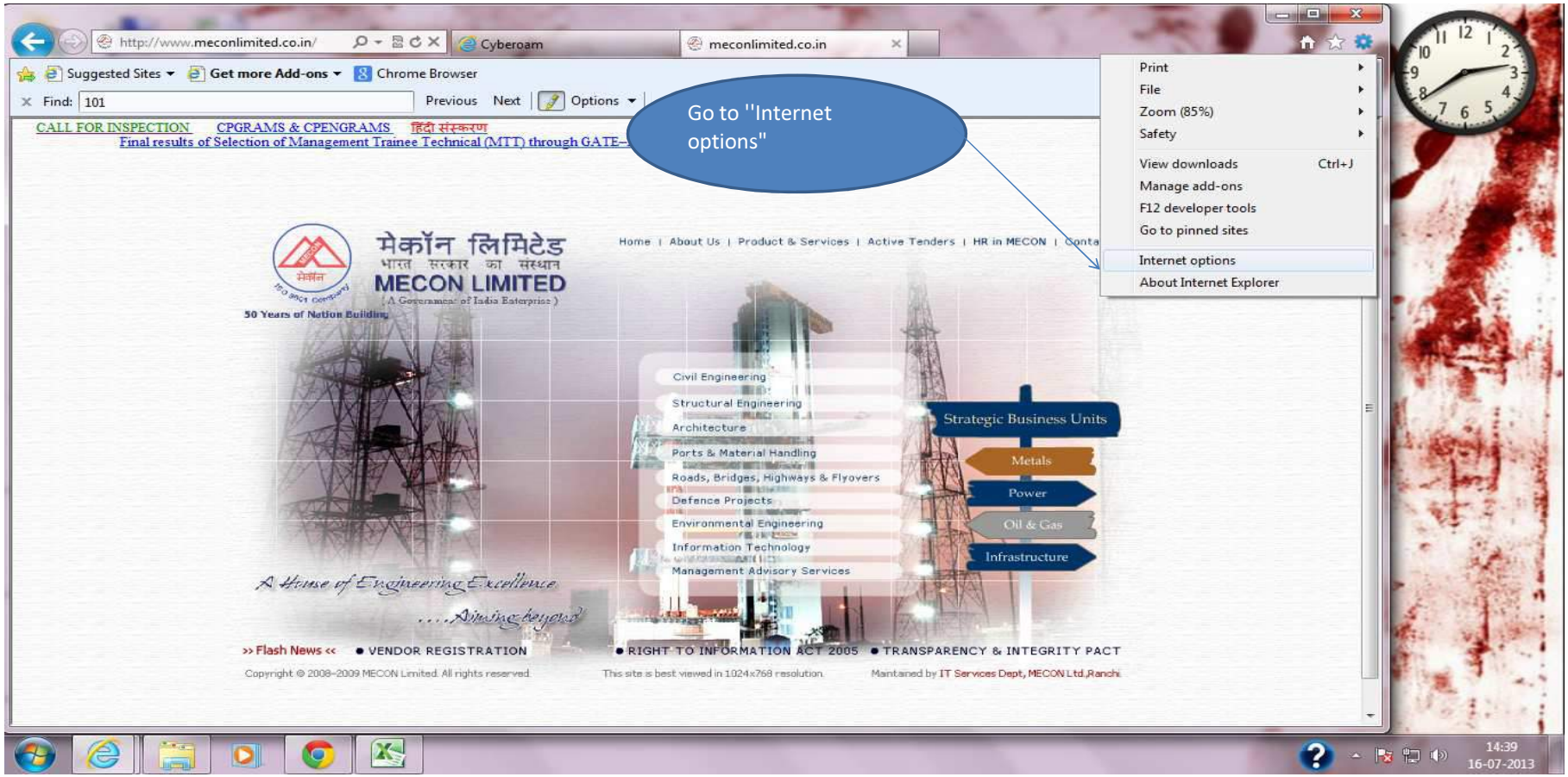
http://www.meconlimited.co.in/
Cyberoam
meconlimited.co.in
Suggested Sites
Get more Add-ons
Chrome Browser
Find: 101
Previous
Next
Options
Go to "Internet options"
Print
File
Zoom (85%)
Safety
View downloads Ctrl+J
Manage add-ons
F12 developer tools
Go to pinned sites
Internet options
About Internet Explorer
CALL FOR INSPECTION
CPGRAMS & CPENGRAMS
हिंदी संस्करण
Final results of Selection of Management Trainee Technical (MTT) through GATE
मेकॉन लिमिटेड
भारत सरकार का संस्थान
MECON LIMITED
(A Government of India Enterprise)
50 Years of Nation Building
Home | About Us | Product & Services | Active Tenders | HR in MECON
Civil Engineering
Structural Engineering
Architecture
Ports & Material Handling
Roads, Bridges, Highways & Flyovers
Defence Projects
Environmental Engineering
Information Technology
Management Advisory Services
Strategic Business Units
Metals
Power
Oil & Gas
Infrastructure
A House of Engineering Excellence
....Aiming beyond
>> Flash News <<
VENDOR REGISTRATION
RIGHT TO INFORMATION ACT 2005
TRANSPARENCY & INTEGRITY PACT
Copyright © 2008-2009 MECON Limited. All rights reserved.
This site is best viewed in 1024x768 resolution.
Maintained by IT Services Dept, MECON Ltd,Ranchi
14:39
16-07-2013

http://www.meconlimited.co.in/ | Cyberoam | meconlimited.co.in

Suggested Sites | Get more Add-ons | Chrome Browser

Find: 101 | Previous | Next | Options

CALL FOR INSPECTION | CPGRAMS & CPENGRAMS | हिंदी संस्करण

Final results of Selection of Management Trainee Technical (MTT

Internet Options

General | Security | Privacy | Content | Connections | Programs | Advanced

Home page

To create home page tabs, type each address on its own line.

http://google.com/

Use current | Use default | Use blank

Browsing history

Delete temporary files, history, cookies, saved passwords, and web form information.

Delete browsing history on exit

Delete... | Settings

Search

Change search defaults. Settings

Tabs

Change how webpages are displayed in tabs. Settings

Appearance

Colors | Languages | Fonts | Accessibility

OK | Cancel | Apply

Home | About Us | Product & Services | Active Tenders | HR in MECON | Contact Us

Civil Engineering
Structural Engineering
Architecture
Ports & Material Handling
Roads, Bridges, Highways & Flyovers
Defence Projects
Environmental Engineering
Information Technology
Management Advisory Services

Strategic Business Units
Metals
Power
Oil & Gas
Infrastructure

REGISTRATION | ● RIGHT TO INFORMATION ACT 2005 | ● TRANSPARENCY & INTEGRITY PACT

This site is best viewed in 1024x768 resolution. Maintained by IT Services Dept, MECON Ltd,Ranchi

14:40
16-07-2013

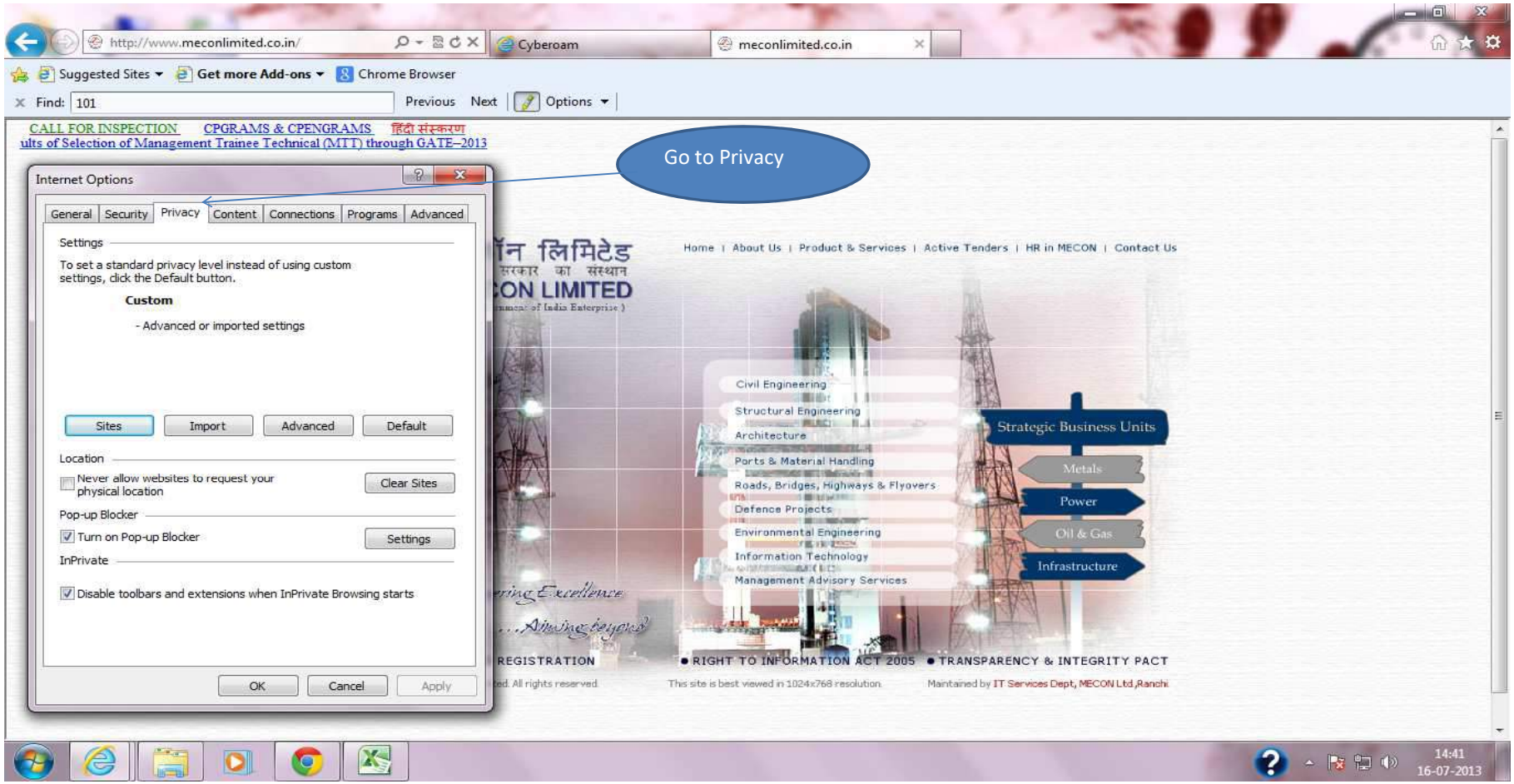
http://www.meconlimited.co.in/
Cyberoam
meconlimited.co.in
Suggested Sites
Get more Add-ons
Chrome Browser
Find: 101
Previous
Next
Options
CALL FOR INSPECTION
CPGRAMS & CPENGRAMS
हिंदी संस्करण
ults of Selection of Management Trainee Technical (MTT) through GATE–2013
Go to Privacy
Internet Options
General
Security
Privacy
Content
Connections
Programs
Advanced
Settings
To set a standard privacy level instead of using custom settings, click the Default button.
Custom
- Advanced or imported settings
Sites
Import
Advanced
Default
Location
Never allow websites to request your physical location
Clear Sites
Pop-up Blocker
Turn on Pop-up Blocker
Settings
InPrivate
Disable toolbars and extensions when InPrivate Browsing starts
OK
Cancel
Apply
Home | About Us | Product & Services | Active Tenders | HR in MECON | Contact Us
CON LIMITED
Civil Engineering
Structural Engineering
Architecture
Ports & Material Handling
Roads, Bridges, Highways & Flyovers
Defence Projects
Environmental Engineering
Information Technology
Management Advisory Services
Strategic Business Units
Metals
Power
Oil & Gas
Infrastructure
REGISTRATION
RIGHT TO INFORMATION ACT 2005
TRANSPARENCY & INTEGRITY PACT
This site is best viewed in 1024x768 resolution.
Maintained by IT Services Dept, MECON Ltd,Ranchi
14:41
16-07-2013

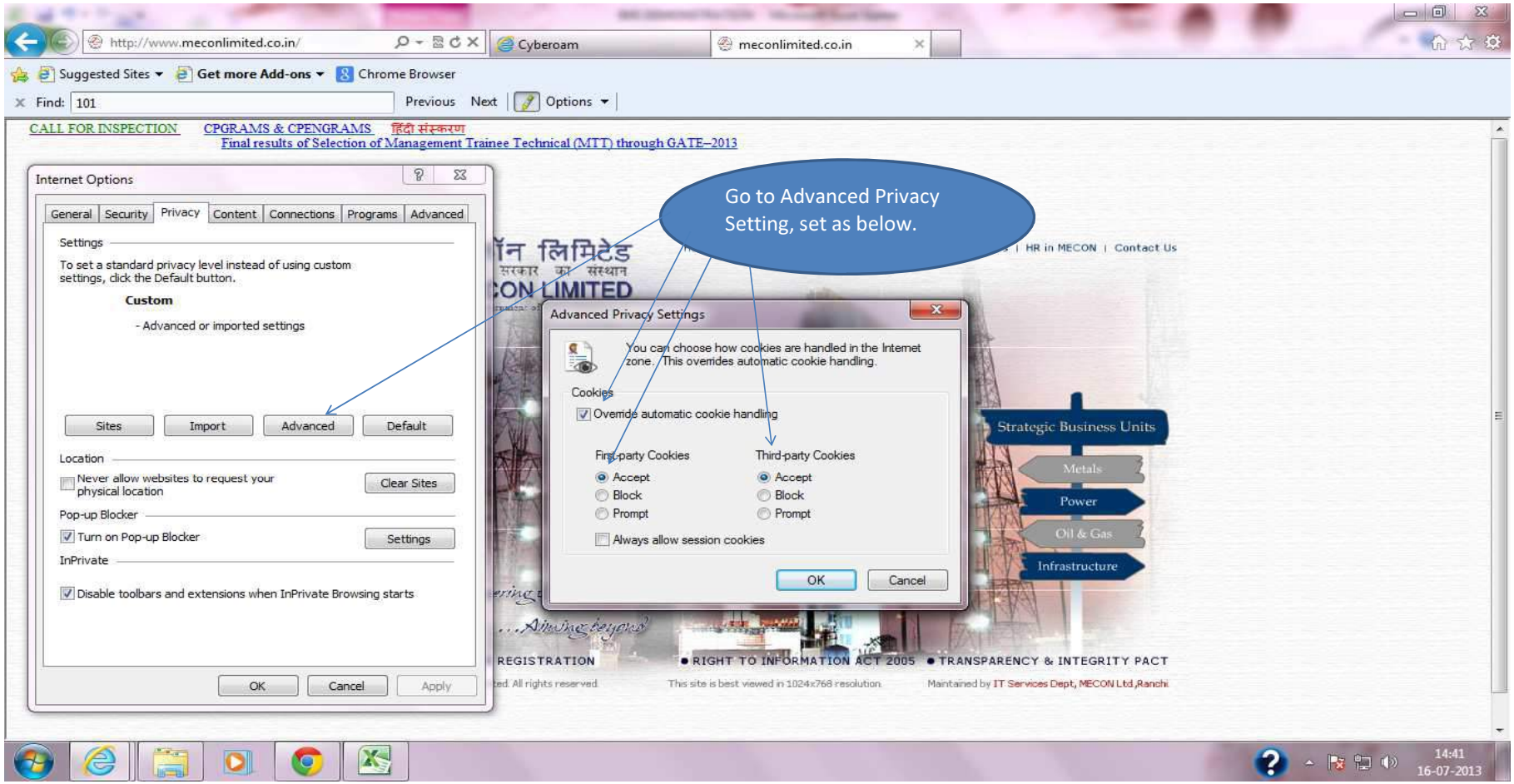
http://www.meconlimited.co.in/
Cyberoam
meconlimited.co.in
Suggested Sites
Get more Add-ons
Chrome Browser
Find: 101
Previous
Next
Options
CALL FOR INSPECTION
CPGRAMS & CPENGRAMS
हिंदी संस्करण
Final results of Selection of Management Trainee Technical (MTT) through GATE–2013
Go to Advanced Privacy Setting, set as below.
Internet Options
General
Security
Privacy
Content
Connections
Programs
Advanced
Settings
To set a standard privacy level instead of using custom settings, click the Default button.
Custom
- Advanced or imported settings
Sites
Import
Advanced
Default
Location
Never allow websites to request your physical location
Clear Sites
Pop-up Blocker
Turn on Pop-up Blocker
Settings
InPrivate
Disable toolbars and extensions when InPrivate Browsing starts
OK
Cancel
Apply
Advanced Privacy Settings
You can choose how cookies are handled in the Internet zone. This overrides automatic cookie handling.
Cookies
Override automatic cookie handling
First-party Cookies
Accept
Block
Prompt
Third-party Cookies
Accept
Block
Prompt
Always allow session cookies
OK
Cancel
HR in MECON
Contact Us
Strategic Business Units
Metals
Power
Oil & Gas
Infrastructure
REGISTRATION
RIGHT TO INFORMATION ACT 2005
TRANSPARENCY & INTEGRITY PACT
This site is best viewed in 1024x768 resolution.
Maintained by IT Services Dept, MECON Ltd,Ranchi
14:41
16-07-2013

IMS Registration Form

Instruction: Pkg. Registration data shall be strictly as per contract copy, without any changes

- **For Pkg Registration:**

1. Project Name .....
2. Work Item No. ..... *(To be provided by Pkg. Co-ordinator)*
3. Pkg. No.....
4. Pkg description .....
5. Contractor .....
6. Order No. & Date.....

- **Requirement of Document:** Contract / LOI / LOA copy with signature of all concerned for validation of above information

- **For User Id & Password**

- User Id ..... (*as desired by contractor*)
- Password ..... (*as desired by contractor*)

1. Email id.....
2. User name.....
3. Company.....
4. Mob. No. .....

Stamp & Signature : .....
Contractor representative : .....
Name of Contractor : .....

Above information checked and found to be in order for IMS Registration.

Checked & Verified by:

Signature :

Name of Project Co-ordinator: .....
Section : .... MECON Ranchi

- ✓ To be sent to inspranchi@meconlimited.co.in by Project co-ordinator.

UTKARSHA ALUMINIUM DHATU NIGAM LIMITED

ESTABLISHING FACILITY FOR ALUMINIUM ALLOY MELTING, SLAB CASTING AND FLAT ROLLED PRODUCTS PRODUCTION FACILITY

GENERAL TECHNICAL SPECIFICATION
FOR
STEEL STRUCTURES
(GS – 06)

MECON LIMITED
RANCHI - 834002

No. MEC/S/11/35/Q7R6/GTS/01/R0 **JUNE' 2022**

CONTENTS

Sl. No	Description	Page. No.
1.	Content Sheet	1
2.	Amendment Sheet	2
3.	Section 01 - Scope and General Description of Work	3 to 5
4.	Section 02 - Fabrication of Steel Structures	6 to 13
5.	Section 03 – Erection of Steel Structures	14 to 19
6.	Section 04 – Welding of Steel Structures	20 to 23
7.	Section 05 – Surface Preparation and Painting of Steel Structures	24 to 30
8.	Section 06 - Cladding of Structural Buildings.	30 to 32
9.	Section 07 – Special Conditions of Contract	33 to 40
10.	**Annexure A** Permissible Deviation in pitch and gauge of holes for bolts of normal accuracy	41
11	**Annexure B** Tolerance of assembled components of steel structures	42
12	**Annexure C** Extent of Permissible Deviations in Assembly of Welded Joints	43
13	**Annexure D** Tolerances in Erected Steel Structures	44 to 46
14	**Annexure E** Material of Construction	47 to 48
15	**Annexure F** Permissible Deviations In Fabrication & Erection	49 to 50

© 2022 MECON Limited All rights reserved

Rev No.	Dt. Of Issue	Prepared By	Checked By	Approved By
0	31.05.2022	Varun Kumar Sr,Manager (Structural)	B.K.Pandey Sr.GM (Structural)	S.K.Jha Sr.GM I/C (Structural)

AMENDMENT SHEET

Sl No.	Amendment No / Sheet No	Letter Reference with Date

© 2022 MECON Limited All rights reserved

SECTION 01 – SCOPE AND GENERAL DESCRIPTION OF WORK

01.01 GENERAL

This specification shall apply to fabrication and erection of steel structures and cladding of structural buildings as per the requirement of the project.

01.01.01 SCOPE OF WORK

The work shall cover:

- Procurement and supply of all raw steel material is by Tenderer.
- In case, the supply of any raw steel material is by purchaser, arrangement of collection, transportation, handling of raw steel material will be responsibility of Tenderer from purchaser's stores or any other point in the plant.
- Procurement and supply of color coated troughed steel sheets, CGS sheets, Polycarbonate sheets, Plain GS sheets etc is by Tenderer.
- In case, the supply of any above sheets is by Purchaser, collection of sheets will be responsibility of Tenderer from purchaser's stores or any other point in the plant.
- Preparation of fabrication drawings.
- Fabrication and application of coat of primer at shop. Fabrication shall be done outside the premises of Plant.
- Transportation, delivery including, loading, unloading, storage and handling at site.
- Erection and painting.

01.02 UNITS

Structural steelwork under the scope of this specification shall consist of the units broadly described under the clause no. 01.04

01.03 LIST OF STEEL STRUCTURES

The steel structures consist of the following but not limited to these.

© 2022 MECON Limited All rights reserved

- Columns, column bracings, shear lug.
- Crane Girders, surge girder , auxiliary girder.
- Crane walkway, crane rail and fixtures and guide rails, crane buffers including wooden stoppers.
- Floor beams, floor bracing and chqd. plate flooring , lugs in floor beams etc
- Monorail beams and supports, monorail operating platforms.
- Bunkers & liner plates, gallery structures.
- Roof trusses, roof girders, monitor truss ,roof and monitor bracings, lighting walkway, purlins, sag angle sag rods.
- Walling runners, louver brackets.
- Platforms, Galvanised gratings, M S gratings, walkways, handrails.
- Expanded Metal Protection Nets
- Stairs, ladders, handrails, lift structures, heat shield, etc.
- Gutters and downcomers.
- Roof and wall sheeting.
- Trestle, Bridges etc.
- Fixing of inserts in existing civil structure.
- Bridge walkway.

01.04 GENERAL DESCRIPTION OF STRUCTURES

The Steel structural works consist of Aluminium alloy plant Building having adjacent open storage for various raw materials, including externally sourced / internally recollected aluminium scrap etc. handling area and the multi bay building consisting of the bays for Melting area, Caster Area, Slab/Ingot Handling and storage area, transfer car area, Scrap area and Roll shop, Plate Ageing, stretcher and plate solubilisation area, Plate furnace area, plate packing and despatch area and Coil storage area, coil packing area, sheet finishing, sheet ageing, sheet storage and sheet packing area. Steel structures shall consist of structural elements like columns, crane girders, beams, bracings, roof structures, wall structures, platforms, walkways, monorails, chequered plates, staircases, ladders, handrails etc. These buildings shall be covered with

© 2022 MECON Limited All rights reserved

permanent colour coated sheets with intermittent translucent sheet for natural light in the building.

01.05 INSTRUCTION TO TENDERERS

01.05.01 This specification shall be read in conjunction with General Conditions of Contract of Purchaser, Special Condition of Contract, Interplant Safety Standard in Work Contracts of Purchaser, drawings and other supplementary documents detailing the work.

01.05.02 For quality system inspection and test of Plant and Equipment at manufacturer's premises relevant document shall be referred.

01.05.03 The entire work under this specification shall be completed within stipulated period from the date of placement of order. After award of contract, a final programme shall be prepared well in advance for fabrication / erection dates with approval of the Purchaser.

01.05.04 The tenderer shall note, that in case he intends to engage a sub-contractor for a particular work, he shall furnish a list of such probable agencies with their full credentials, for approval of the Purchaser. The engagement of a sub-contractor can be done from only amongst those in the vendor's list of the Purchaser. However the responsibility of the work undertaken by the approved sub-contractor shall fully rest with the principal and main contractor.

© 2022 MECON Limited All rights reserved

SECTION 02 - FABRICATION OF STEEL STRUCTURES

02.01 SCOPE OF WORK

The scope of work under fabrication includes, but not limited to, the following:

a) Preparation and supply of material indents, bolt lists bought out items list.

b) Procurement and supply of all steel materials from stock-yard/ stores including loading, transportation, unloading and stacking/ storing on skids or supports.

c) Procurement and supply of all consumables like bolts nuts, washers, electrodes, paints, shims, packs, etc., including allowance for spares and wastage.

d) Preparation and submission of fabrication drawings, modification /rectification sketches, as made drawings, erection drawings, bill of materials, bolts lists and shipping documents for approval of purchaser.

e) Preparation of adequacy details for non-standard connections, temporary bracings etc. for approval of purchaser.

f) Cold straightening of section and plates, whenever they are bent and kinked.

g) Fabrication of all steel structural components covered under tender drawings, design drawings and generally described under the scope of the project.

h) The Contractor has to make arrangements and bear the cost of conducting tests, such as chemical analysis, physical and mechanical tests on raw materials in case of inability to produce material certificate for the material procured by him.

i) Making arrangements and bearing cost for providing all facilities for conducting ultrasonic, X-ray or gamma ray tests of welds; getting the tests conducted by reputed testing laboratories making available test films / graphs, reports and interpretation.

j) Control Assembly of fabricated structural components at shop, wherever required.

k) Preparation of steel structural surfaces for painting as provided in the specifications / drawings.

l) Application for one primer coat of painting at shop, as specified in the design drawing/ specifications.

m) Loading, transportation of fabricated structures to site of erection and unloading of all steel structural components / units / assemblies.

n) Preparation of "As-built" drawings.

© 2022 MECON Limited All rights reserved

02.02 PREPARATION OF FABRICATION DRAWINGS

02.02.01 Fabrication drawings shall be prepared based on design drawings of steel structures.

02.02.02 Drawing shall be prepared in metric system as per IS:696-1972 and IS:813-1986. The fabrication drawings shall specify the following details.

a) Type, size and length of welds in case of welded connections,(specifying clearly shop or site weld). Length of weld specified shall be effective length (excluding end crates).

b) In case of bolted joints, arrangement of bolts and specification of bolts, nuts etc.(specifying clearly shop and site bolts).

c) Specification of electrode/wire flux.

d) If required special provision to be mentioned in the drawings for handling of structures during and after fabrication.

e) Specification of paint and corresponding surface preparation for painting.

f) General arrangement/marking plan.

g) Reference to design drawings.

h) Material list indicating mark number-wise material requirement giving size, weight, material specification, identification number of each items, number of pieces required etc.

i) Layout with all connecting members with blown up joint details wherever required, in order to specify clearly various fabrication and erection requirements as per design drawings.

j) Specification of preparation of mating surfaces in case of connection by HSFG bolts.

k) Appropriate edge preparation in case of butt/groove welds in accordance with IS:9595-1980, for all plates and sections having thickness greater than 8 mm.

l) Erection clearances in order to facilitate smooth erection at site (ref clause no.11.2.2.of IS: 800- 1984).

m) Each erection piece shall be clearly identified by an erection mark in these drawings. All loose members shall be given part mark, which shall be 'wired on' the main erection piece for dispatch.

© 2022 MECON Limited All rights reserved

02.02.03 Fabrication drawings shall be prepared in such a manner that Structures can be dispatched from fabrication shop to erection site with maximum economic transportable size, so as to reduce work involved at site to a minimum.

02.02.04 Bracings shall be connected for the force specified in the design drawing. If the force is not indicated then the bracing members shall be connected for the full capacity of the member .

02.02.05 Simple beam connections with Cleat-plate, unless otherwise stated in the drawings, shall be designed and detailed for 60% beam shear carrying capacity.

02.02.06 Wherever there is risk of nuts becoming loose due to vibration, lock nuts shall be provided, or nuts shall be welded after alignment and tightening.

02.02.07 For all connections by permanent bolts, two no. of washers shall be used. One washer bearing against the head and the other bearing against the nut.

02.02.08 Detailing of structural steel members subject to dynamic loading shall be such as to ensure smooth transition of load, as well as best behavior under stress due to fatigue. Welding across tension flange of crane girders is not permitted.

02.02.09 For detailing connection, the allowable stress for materials, welds, bolts etc, shall be as per IS:800- 1984 and IS:816-1969, or as specified in the drawing.

02.02.10 The contractor shall be responsible for detailing and adequacy of all connections. The detailed connections shall provide adequate strength for transfer of force in the structural elements, as indicated on design drawings. Detailing shall be such that erection shall be convenient and free from all interfaces, drilling and cutting at site.

02.03 MATERIALS

02.03.01 Structural steel and other related materials for construction shall conform to **ANNEXURE-E**.

02.03.02 Due to non-availability of specified materials, suitable substitutions may be provided with the consent of the purchaser. Such substitution shall be incorporated in the "As-built" drawings.

02.03.03 All the items are to be cut as per requirements of the drawing. If joints are to be provided in any item, in order to meet requirements of size and shape, cutting plan showing locations of joints shall be prepared for consideration of purchaser. Joints provided shall be incorporated in "As-built" drawings.

02.03.04 Rolling and cutting tolerances shall be as per IS:1852:1985.

02.03.05 If test certificate for the material is not available from the main producer, the tests for Chemical Composition, Mechanical Properties, Weldability shall be carried out at the cost of the Contractor.

© 2022 MECON Limited All rights reserved

02.03.06 Before taking up fabrication of heavy sections (built-up sections made of thick plates and heavy rolled sections), the contractor should test the material with respect of cracks, undulations, laminations, cleavages etc. and reject it if faulty. If such fault is detected afterwards, the Contractor has to replace the structure at his own cost.

02.03.07 Where steel castings are to be used the same shall conform to IS: 1030:1989.

02.03.08 Only tested materials shall be used. Manufacturer's test certificate, including chemical analysis shall be supplied.

02.04 STORING OF MATERIALS

02.04.01 Materials shall be stored and stacked properly ensuring that place is properly drained and is free from dirt. It shall be ensured that no damage is caused due to improper stacking.

02.05 MATERIAL PREPARATION

02.04.02 Cut edges shall be finished smooth by grinding or machining wherever necessary. Sufficient allowance (3 mm to 5 mm) should be kept in the items incase machining is necessary.

02.04.03 Cutting may be effected by gas cutting, shearing, cropping or sawing. In gas cutting of high tensile steel, special care is to be taken to leave sufficient metal to be removed by machining so that all metal that has been hardened by flame is removed.

02.04.04 Sufficient shrinkage allowance (@ 1mm/M) shall be kept wherever heavy welding is involved.

02.04.05 Straightening and bending shall be done in cold condition as far as practicable.

02.04.06 If required, straightening and bending may be done by application of heat between 900°C and 1100°C. Cooling down of the heated item shall be done slowly.

02.04.07 Rails shall be free from twist, pittings, laminations and other internal or external defects. The rail shall be straight and the deviation from straightness shall not exceed +1.5 mm. If necessary, the rails shall be cold straightened.

02.06 DRILLING AND PUNCHING OF HOLES

02.06.01 Drilling and punching of holes for bolts shall be done as per clause no.11.2.4 of IS:800:1984, unless otherwise specified by the purchaser.

© 2022 MECON Limited All rights reserved

02.06.02 Drifting of holes for bolts during assembly shall not cause enlargement of holes beyond permissible limit or damage the metal.

02.06.03 Holes for bolted connection should match well to permit easy entry of bolts. Gross mismatch of holes shall be avoided.

02.06.04 Permissible deviation in holes for mild steel bolts of normal accuracy and high strength bolts are given in the **ANNEXURE-A**.

02.07 ASSEMBLY FOR FABRICATION

02.07.01 Fabrication of all structural steelwork shall be in accordance with IS:800-1984 and in conformity with various clauses of this specification, unless otherwise specified in the drawings.

02.07.02 Fabrication of structures shall preferably be taken up as per the sequence of erection.

02.07.03 All erection units shall bear erection mark no. and reference drg no. at a prominent location on the structures for easy identification at site.

02.07.04 Fabricated structures shall conform to tolerance as specified in this standard and in IS:7215-1974. In case of contradiction, tolerances specified in this standard shall prevail.

02.07.05 All the components of structures shall be free from twist, bend, damage etc.

02.07.06 Assembly of structures shall be carried out by using suitable jigs and fixtures in order to obviate distortion during welding.

02.07.07 Cutting of items specially for truss, bracing, bunker, hopper, galleries surge girder, portal etc, shall be done only after checking of sizes as per Layout.

02.07.08 Surface, wherever machining is specified, shall be either planed or milled or ground to ensure maximum contact.

02.07.09 If end-milling or machining is planned after the assembly is over, sufficient allowance (5 mm to 15 mm) shall be kept in the items where milling/machining is to be done.

02.07.10 If pre-bending of the plate is required to avoid welding distortion, it shall be done in cold condition.

02.07.11 If extra joints are required to be provided in column, crane girder etc, approval should be obtained from the purchaser. However, as general guidance following is suggested. Splice joints of column and crane girder shall of full strength butt weld and wherever possible shall be located at zones of minimum or substantially lesser stress.

© 2022 MECON Limited All rights reserved

02.07.12 Splice joints of flange and web should preferably be staggered.

02.07.13 Sufficient trial assembly of fabricated components (despatch elements) shall be carried out in the fabrication works to control the accuracy of workmanship.

02.07.14 Where necessary, washers shall be tapered or otherwise suitably shaped to give the heads of nuts and bolts satisfactory bearing.

02.07.15 The threaded portion of each bolt shall project through the nut at least by one thread.

02.07.16 Tolerance of assembled components of structures are given in **ANNEXURE-B**.

02.07.17 Permissible deviations from designed (true) geometrical form of the despatch elements shall be in accordance with IS:7215-1974.

02.08 WELDING

02.08.01 All welding work should be carried out as mentioned under the "Welding of Structures" section of this specification.

02.09 INSPECTION & TESTING

02.09.01 The purchaser/Inspector shall have free access at all times to those parts of Contractor's or his Sub- Contractor's works which are concerned with the fabrication of steel works. Also he shall be afforded all reasonable facilities at all stages of preparation, fabrication and trial assemblies for satisfying himself that the fabrication is being undertaken in accordance with the provisions of relevant specification.

02.09.02 All gauges and templates, tools, apparatus, labour and assistance for checking shall be supplied by the contractor free of charge. The purchaser /Inspector may at his discretion, check the test results obtained at the Contractor's works, by independent test at the Government Test House or elsewhere, and should the material so tested be found to be unsatisfactory, the cost of such such test shall be borne by the Contractor.

02.09.03 Contractor shall make all necessary arrangements for stage inspection by purchaser/Inspector during the fabrication at shop and incorporate all on-the-spot instructions / changes conveyed in writing to the Contractor.

02.09.04 Material improperly detailed or wrongly fabricated shall be reported to the Purchaser/Inspector and shall be made good as directed. Minor misfits which can be remedied by moderate use of drift pins, and moderate amount of reaming and slight chipping may be corrected in that manner, if in the opinion of the Purchaser/Inspector the strength or appearance of the structure will not be

© 2022 MECON Limited All rights reserved

adversely affected. In the event the Purchaser/Inspector directs otherwise, the items will be rejected and a completely new piece shall be fabricated. The cost of correcting errors shall be to the account of the Contractor.

02.09.05 The Purchaser/Inspector shall have the power:

- To certify, before any structure is submitted for inspection, that the same is not in accordance with the contract, owing to the adoption of any unsatisfactory method of fabrication.
- To reject any structure as not being in accordance with specifications & drawings.
- To insist that no structure or parts of the structure once rejected is resubmitted for inspection/ test, except in cases where the Purchaser / Inspector/ authorized representative considers the defects as rectifiable.

02.09.06 If, on rejection of structure by the Purchaser/Inspector the Contractor fails to make satisfactory progress within the stipulated period, the Purchaser/Inspector shall be at liberty to cancel the contract and fabricate or authorise the fabrication of the structures at any other place he chooses, at the risk and cost of the Contractor, without prejudice to any action being taken in addition to terms of General Conditions of Contract.

02.09.07 The Purchaser / Inspector's decision regarding rejection shall be final and binding on the Contractor.

02.09.08 The specifications prescribe various tests at specified intervals for ascertaining the quality of the work done. If the tests prove unsatisfactory, Purchaser/Inspector shall have liberty to order the Contractor to re-do the work, done in that period and/ or to order such alterations and strengthening that may be necessary at the cost of the Contractor. The contractor shall be bound to carryout such orders failing which the rectification/redoing will be done by the Purchaser through other agencies and the cost recovered from the Contractor.

02.09.09 Notwithstanding any inspection at the workshop, the Purchaser/Inspector shall have the liberty to reject, without being liable for compensation any fabricated members or materials brought to site that do not conform to specifications / drawings.

02.09.10 All rejected materials shall be removed from the site of fabrication by the Contractor at his own cost and within the time stipulated by the Purchaser/Inspector.

02.10 ACCEPTANCE CRITERIA OF PLANED/ MACHINED SURFACE

© 2022 MECON Limited All rights reserved

02.10.01 Standard of acceptance for planed/machined surfaces, wherever specified by designer, (eg. in end bearing plates of crane girders, base plates and column shafts etc.) shall be as given as per following.

02.10.02 Maximum surface unevenness on bearing surface of cap/ base plate shall not exceed 0.5 mm.

02.10.03 When assembled, there must be physical contact for at least 75% of the contact surface.(The checking shall be carried out with 0.2mm gauge . Care should be taken that these connecting members are fixed with such accuracy that they are not reduced in thickness during machining by more than 1.0 mm.

02.11 DESPATCH INSTRUCTIONS

02.11.01 Each despatchable structure shall bear mark no. along with reference drawing number at two prominent locations (e.g. on flange and bottom of base plate of a column).

02.11.02 "As built" drawing shall be prepared after fabrication is completed to indicate additions / alterations made during the process of fabrication.

02.11.03 Control assembly of important structures shall be done in the shop floor before despatch to avoid mismatching. For all such important structures, match marking shall be given at the control assembly stage in the shop floor and such match markings shall be made clearly visible while assembling the structures at site.

02.11.04 Centre lines of column flanges and both sides of web shall be punched, preferably at top and bottom to facilitate alignment after erection.

02.12 COMPLETION DOCUMENTS

02.12.01 On completion of work, the Contractor shall submit to the Purchaser the following documents.

- The technical documents according to which the work was carried out.
- Copies of the “As built" drawings showing thereon all additions and alterations made during the fabrication.
- Manufacturer's test certificates.
- Certificates/documents on control checking.
- Test of welds

02.12.02 The Purchaser/Inspector shall issue inspection Certificates to the contractor for the structures found acceptable.

© 2022 MECON Limited All rights reserved

SECTION 03 - ERECTION OF STEEL STRUCTURE

03.01 SCOPE OF WORK

The scope of work under erection includes, but not limited to, the following:

a) Supply of tools and tackles, consumables, materials, labour and supervision.

b) Storing and stacking of all fabricated structural components/units/assemblies at site storage yards till the time of erection.

c) Transportation of structures from storage yard to site of erection, including multiple handling, if required.

d) All minor rectification / modifications.

e) Removal of bends, kinks, twists etc. for parts damaged during transportation and handling.

f) Reaming of holes which do not register or which are damaged, for use of next higher size bolt.

g) Plug-welding and re-drilling of holes which do not register and which cannot be reamed for use of next higher size bolt.

h) Drilling of holes which are either not drilled at all or are drilled in incorrect position during fabrication.

i) Fabrication of minor missing items as directed by the purchaser.

j) Verification of the position of embedded anchor bolts and inserts with respect to benchmarks/ based on Geodetic Scheme.

k) Assembly at site of steel Structural components wherever required, including temporary supports and staging.

l) Making arrangements and bearing cost for providing all facilities for conducting ultrasonic, X-ray or gamma ray tests of welds; getting the tests conducted by reputed testing laboratories making available test films / graphs, reports and interpretation.

m) Rectification at site damaged portions of shop primer by cleaning and application of primer and touch-up paint.

n) Erection of structures including making connections by bolts / High strength Friction Grip bolts/welding as per drawing.

o) Alignment of all structures true to line, level, plumb and dimensions within specified limits of tolerance.

© 2022 MECON Limited All rights reserved

p) Application at site after erection, required number of coats of primer and finishing paint as per specification and drawing.

q) Rectification of structures as per Preliminary acceptance report and Final acceptance report.

03.02 STORAGE AND HANDLING

03.02.01 Storage of structures shall be preferably be done in such a manner that erection sequence is not affected.

03.02.02 While storing, care shall be taken so that structures do not come in direct contact with the earth surface and accumulated water. Girders, beams, columns. shall be placed and stored in such a manner that during rain, no accumulation of water on the structures takes place.

03.02.03 Stacking of the structures shall be done in such a way that, erection marks are visible easily and handling does not become difficult. Wherever required, wooden sleepers / grilles may be used.

03.02.04 Handling and storage of materials shall be as per IS:7969-1975, to ensure safety.

03.03 GENERAL INSTRUCTIONS FOR ERECTION

03.03.01 Erection shall be carried out in accordance with IS:800:1984 and other relevant standards referred to therein.

03.03.02 For safe and accurate erection of structural steelwork, staging, temporary support, false-work etc. shall be erected as required.

03.03.03 The fabricated materials received at erection site shall be verified with respect of marking on the key plan/marking plan or shipping list.

03.03.04 Any material found damaged or defective shall be stacked separately and the damaged or defective portions shall be painted in distinct colour for identification and the same shall be brought to the notice of the Purchaser.

03.03.05 The approved erection drawings and any approved arrangement drg, specification or instruction accompanying them shall be followed in erecting structures.

03.03.06 Erection work shall be taken up after receipt of clearance from the purchaser.

03.03.07 For safety requirements during erection, provisions in IS:7205:1974, IS:7969:1975 and other relevant Indian standards shall be followed.

© 2022 MECON Limited All rights reserved

03.03.08 Erection shall be carried out with the help of maximum mechanisation possible.

03.03.09 Prior to commencement of erection, all the erection equipment, tools, tackles, ropes etc. shall be tested for their load carrying capacity. Such tests may be repeated at intermediate stages also if considered necessary and frequent visual inspection shall be done of all vulnerable areas and components to detect damages or distress in the erection equipment, if any.

03.03.10 Temporary bracing, whenever required, shall be provided to sustain forces due to erection loads and equipment etc. Erected parts of the structures shall remain stable during all stages of erection when subjected to the action of wind, dead weight and erection forces etc. Specified sequence of erection of vertical and horizontal structural members shall be followed.

03.03.11 Erected members shall be held securely in place by bolts to take care of dead load, wind load and erection load.

03.03.12 All connections shall achieve free expansion and contraction of structures wherever provided.

03.03.13 No final bolting or welding of joints shall be done until the structure has been properly aligned.

03.03.14 For positioning beams, columns and other steel members, the use of steel sledges is not permitted.

03.03.15 Instrumental checking of correctness of initial setting out of structures and adjustment of alignment shall be carried out in sequence and at different stages as required. The final leveling and alignment shall be carried out immediately after completion of each section of a building.

03.03.16 All structural members shall be erected with erection marks in the same relative position as shown in the appropriate erection and shop drawings.

03.03.17 The contractor shall manufacture, erect and provide false-work, staging temporary support etc. required for safe and accurate erection of structural steelwork and shall be fully responsible for the adequacy of the same in strength for transferring temporary and erection loads.

03.03.18 The Contractor shall also provide facilities such as adequate temporary access ladders, gangways, tools & tackles, instruments etc. to purchaser for his inspection at any stage during erection.

03.03.19 The contractor shall fully abide by the safety procedures and any accident whatsoever concerned to erection shall be full responsibility of the contractor.

© 2022 MECON Limited All rights reserved

03.04 FIELD CONNECTIONS

03.04.01 The numbers of washers on permanent bolts shall be one for the bolt head side and one or two for the nut side.

03.04.02 Where bolting is specified on the drawing, the bolts shall be tightened to the specified limit. The threaded portion of the each bolt shall project through the nut by at-least one thread. Tapered washers shall be provided for all heads and nuts to achieve uniform bearing on sloping surface.

03.04.03 To prevent loosening of nuts, spring washers or lock- nuts shall be provided as specified in the design/shop drawings.

03.04.04 All machine-fitted bolts shall be perfectly tight and the ends shall be checked to prevent nuts from becoming loose. No unfilled holes shall be left in any part of the structures.

03.04.05 All field assembly by welding shall be executed in accordance with the requirements for shop fabrication. Where the steel has been delivered painted, the paint shall be removed before field welding for a distance of at least 50 mm on either side of the joints to be welded.

03.04.06 Assembly of structures with High Strength Friction Grip (HSFG) bolts shall conform to IS: 4000-1992.

03.04.07 The mating surfaces shall be prepared in accordance with the requirements of design in order to achieve required properties to develop adequate friction between the surfaces.

03.04.08 The mating surfaces shall be absolutely free from grease, lubricant, dust, rust etc. and shall be thoroughly cleaned before assembly.

03.04.09 The nuts shall be tightened up-to the specified torque with the help of torque -wrench or by half- turn method with the help of pneumatic wrench lever.

03.04.10 The direction of tightening of the nuts shall be from the middle toward the periphery of assembly.

03.04.11 After desired tightening the bolt heads, nuts and edges of the mating surfaces shall be sealed with a coat of paint to obviate entry of moisture.

03.05 ACCEPTANCE STANDARD OF WELDING

03.05.01 Acceptance standard of welding shall be as specified in “Welding of Structures” section of this specification.

© 2022 MECON Limited All rights reserved

03.06 BEDDING AND GROUTING

03.06.01 Base plates shall be set to elevations shown on the drawings, supported aligned and leveled using steel wedges and shims or by other approved methods. Plates shall be leveled properly, positioned and the anchor bolts tightened.

03.06.02 Bedding/grouting shall not be carried out until sufficient number of columns have been properly aligned, leveled and plumbed and sufficient number of girders, beams, trusses and bracings have been put in position to the satisfaction of purchaser.

03.07 CRANE RAIL JOINTS

03.07.01 The crane rail joints shall be butt-jointed (either by thermit or fusion welding) or by fish plates as per specification/ drawings.

03.07.02 For butt-welding, the Contractor shall take prior approval of the purchaser regarding method of edge preparation, welding procedure and sequence of welding to be done. Edge preparation shall be done by oxy- acetylene flame and shall be neatly finished by chipping and grinding.

03.07.03 All position low hydrogen electrode conforming to IS:814-1991 shall be used for welding. The rail ends shall be preheated to 250`C before welding .The electrode shall be preheated as per manufacturer's instructions. The welded joint shall be allowed to cool slowly. It is recommended that the initial and intermediate layers of deposits may be built by using Ferron V, super chord or equivalent. Top 3 mm layer shall be deposited with Duroid 2A or equivalent, to obtain good wearing surface.

03.07.04 The joints shall be free from kinks, twists etc. and shall be ground properly after welding to ensure smooth running of the crane.

03.08 PAINTING AFTER ERECTION

03.08.01 The painting shall be as per " Surface preparation and painting of structures" section of this specification and instructions stated in the drawings.

03.09 ERECTION TOLERANCES

03.09.01 Maximum permissible tolerances in erected steel structures shall be as given in **ANNEXURE-D**.

03.10 ACCEPTANCE OF WORK

© 2022 MECON Limited All rights reserved

03.10.01 Acceptance of erected steel structures shall be either after completion of erection of the whole building or in blocks.

03.11 DOCUMENTATION

03.11.01 The following documents shall be prepared at the time of acceptance of erected structures.

a) Documents showing actual deviations made during execution of erection work and approval of competent authority.

b) Documents showing acceptance of embedded structures.

c) Certificates /documents on control checking and test of materials (if any) and weld.

d) Data and result of geodetic measurements obtained while checking the erection of the structures.

e) Copies of "As-Built" drawing showing thereon all additions and alternations, which took place between approval of drawing and erection of structures.

© 2022 MECON Limited All rights reserved

SECTION 04 - WELDING OF STEEL STRUCTURES

04.01 GENERAL INSTRUCTION FOR WELDING

04.01.01 The Contractor shall work out welding procedure at his own responsibility for Purchaser's approval, considering the following factors.

a) Specification and thickness of steel.

b) Specification of electrode or/and base wire.

c) Welding process (manual arc welding, submerged arc welding).

d) Type of structures to be welded (thickness of components meeting at a joint).

e) Pre and post heating requirement.

f) Preparation of fusion faces.

g) Sequence of welding.

h) Weather condition.

i) Use of jigs and fixtures etc.

j) Type of non-destructive testing to be carried out.

k) Inspection procedure to be followed.

l) Design requirements of the joints.

04.01.02 Welding of any load bearing structure shall be carried out only by the person who has passed welder's qualification as per IS:7318 (Part-I)-1974.

04.01.03 All metal arc welding shall be carried out as per IS:9595-1980.

04.01.04 Submerged arc welding of mild steel and low alloy steel shall be as per IS:4353-1967.

04.01.05 Electrode shall conform to as specified in **ANNEXURE- E** of this specification.

04.01.06 Electrodes shall be stored in a dry place. Electrodes whose coatings are damaged due to absorption of moisture or due any other reason shall not be used.

04.01.07 Low Hydrogen electrodes and flux for submerged welding shall be dried at 250°-300° C for one hour in drying even before use.

04.01.08 For suitability of wire flux combination, procedure test shall be carried out as per IS:3613-1974 if so required.

© 2022 MECON Limited All rights reserved

04.01.09 Welding shall be done by electric arc process. Generally submerged arc, automatic & Semi-automatic welding shall be employed. Only where it is not practicable, manual arc welding may be resorted to. In case of manual arc welding, recommendations of electrode manufacturer are to be strictly followed.

04.01.10 Welding surface shall be smooth, uniform, and free from fins, tears notches or any other defect, which may adversely affect welding.

04.01.11 For multi-run weld deposit, the next run should be done only after thorough removal of slag and proper cleaning of surface.

04.01.12 Fillet weld shall have the correct profile with smooth transition into parent metal. Dressing of welds, if specified, shall be done by such method, which does not cause grooving and other surface defects on the weld or on the parent metal.

04.01.13 All butt welds shall start and end with run-on and run- off plates. All such plates shall be carefully trimmed off by gas cutting after welding is over.

04.01.14 Fillet welds shall not be stopped at corners but shall be returned round them.

04.01.15 If butt weld is to be ground flush with the surface of the member as per drawing. Adequate reinforcement shall be built up and then the same shall be chipped off and ground flush. The grinding is to done in the direction of stress flow till the transverse marks are eliminated.

04.01.16 Welding shall not be done under such weather conditions, which might adversely affect the efficiency of the welding.

04.01.17 Manipulators shall be used wherever necessary and shall be designed to facilitate welding and ensure that all welds are easily accessible to the operators.

04.01.18 Stress relieving after welding shall be done if especially called for in the drawing or specification. Ends of structural members and portions of gussets receiving welding at site shall be left unpainted.

04.01.19 Permissible deviation in assembly of weld joints shall be in accordance with **ANNEXURE-C**.

04.02 CONTROL IN WELDING

04.02.01 The extent of quality control in respect of welds for structural elements for both statically and dynamically loaded structures shall be as follows and shall be conducted by the contractor at his own cost. Before inspection, the surface of weld metal shall be cleaned of all slag, spatter matter, scales etc. by using wire brush or chisel.

© 2022 MECON Limited All rights reserved

a) Visual Examination - All welds shall be 100% visually inspected to check the following like Presence of undercuts, Visually identifiable surface cracks in both welds and base metals, Unfilled craters, Improper weld profile and size, Excessive reinforcement in weld, Surface porosity.

b) Dye Penetration Test (DPT) - This shall be carried out in accordance with American National Standard ASTM E165 for all important fillet welds and groove welds for both statically and dynamically loaded structures to check the following like Surface cracks, Surface porosity.

c) Ultrasonic testing

Ultrasonic test shall be conducted for all groove welds and heat affected zone in dynamically loaded structures and for other important load bearing butt welds in statically loaded structures as desired by purchaser, to detect the following like Cracks, Lack of fusion, Slag inclusions, Gas porosity

Ultrasonic testing shall be carried out in accordance with American National Standard ANSI/AWS D1.1-96 Chapter -6: Part F.

Before ultrasonic test is carried out, any surface irregularity like undercuts, sharp ridges etc. shall be rectified. Material surface to be used for scanning by probes must allow free movement of probes. For this purpose, surface shall be prepared to make it suitable for carrying out ultrasonic examination.

d) Radiographic Testing (X-ray and Gamma-Ray Examination)

This test shall be limited to 2% of length of welds for welds made by manual or semi- automatic welding and 1 % of length of weld if made by automatic welding machines. The location and extent of weld to be tested by this method shall be decided by purchaser to detect the following defects like gas porosity, slag inclusions, lack of penetration, lack of fusion, cracks.

Radiographic testing shall be conducted in accordance with American National Standard ANSI/AWS D1.1-96 Part E.

Any surface irregularity like undercuts, craters, pits etc. shall be removed before conducting radiographic test. The length of weld to be tested shall not be more than 0.75 x focal distance. The width of the radiographic film shall be width of the welded joint plus 20 mm on either side of the weld.

04.03 ACCEPTABLE LIMITS OF DEFECTS IN WELD

04.03.01 Limits of Acceptability of welding defects shall be as follows.

a) Visual inspection & Dye Penetration Test - The limits of acceptability of defects detected during visual inspection and Dye Penetration Test shall be in accordance with clauses 6.9 & clause 6.10 of American National Standard

© 2022 MECON Limited All rights reserved

ANSI/AWS D1.1-96 for statically as well as dynamically loaded structures respectively.

b) Ultrasonic Testing - The limits of acceptability of defects detected during ultrasonic testing shall be in accordance with clause 6.13.1 & clause 6.13.2 of American National Standard ANSI/AWS D1.1-96 Chapter 6: Part C for statically and dynamically loaded structures respectively.

c) Radiographic testing - The limits of acceptability of defects detected during Radiographic testing shall be in accordance with clauses 6.12.1 & 6.12.2 of American National Standard ANSI/AWS D1.1-96 Chapter 6 : Part C for statically and dynamically loaded structures respectively.

04.04 RECTIFICATION OF DEFECTS IN WELDS

04.04.01 In case of detection of defects in welds, the rectification of the same shall be done as follows.

a) All craters in the weld and breaks in the weld run shall be thoroughly filled with weld.

b) Undercuts, beyond acceptable limits, shall be repaired with dressing so as to provide smooth transition of weld to parent metal.

c) Welds with cracks and also welds with incomplete penetration, porosity, slag inclusion etc. exceeding permissible limits shall be rectified by removing the length of weld at the location of such defects plus 10 mm from both ends of defective weld, and shall be re-welded. Defective weld shall be removed by chipping hammer, gouging torch or grinding wheel. Care shall be taken not to damage the adjacent material.

© 2022 MECON Limited All rights reserved

SECTION 05 – SURFACE PREPARATION AND PAINTING OF STEEL STRUCTURES

05.01 SURFACE PREPARATION FOR PAINTING

05.01.01 The steel surface which is to be prepared shall be cleaned of dirt and grease and the heavier layers of rust shall be removed by grinding prior to actual surface preparation to a specified grade.

05.01.02 Surface preparation to be followed prior to painting shall be based on the requirement of a particular painting system adopted. One of the following specifications for surface preparation is to be followed as per requirement.

05.02 GRADES OF MECHANICAL CLEANING

05.02.01 Mechanical cleaning shall be done manually or using power as per grade St-2 or St-3 of Swedish Standard Institution SIS 055900.

a) Grade St-2: Thorough scraping and wire brushing, machine brushing, grinding etc. This grade of preparation shall remove loose mill scale, rust and foreign matter. Finally the surface is to be cleaned with a vacuum cleaner or with clean compressed air or with clean brush. After preparation, the surface should have a faint metallic sheen. The appearance shall correspond to the prints designated St-2.

b) Grade St-3: very thorough scraping and wire brushing, machine brushing, grinding etc. The surface preparation is same as for grade St-2 but to be done much more thoroughly. After preparing the surface, it should have a pronounced metallic sheen and correspond to the prints designated St-3.

05.02.02 If no grade of surface preparation is specified, Grade St-2 as specified above shall be followed.

05.03 GRADES OF BLAST CLEANING

05.03.01 Blast cleaning shall be done by sand blasting or shot blasting as per following grades according to Swedish Standard SIS 055900.

a) Grade Sa-2: This involves light blast cleaning. Almost all mill scale, rust and foreign matter shall be removed. Finally the surface is cleaned with a vacuum cleaner, clean dry compressed air or a clean brush. The surface shall look grayish in colour and correspond in appearance to the prints designated as Sa-2.

b) Grade Sa-2½: This involves very thorough blast cleaning. Mill scale, rust and foreign matter shall be removed to the extent that the only traces remain in the form of slight stains. Finally the surface is cleaned with a vacuum cleaner, clean dry compressed air or a clean brush. It shall then correspond in appearance to the prints designated as Sa 2½.

© 2022 MECON Limited All rights reserved

c) Grade Sa-3: This involves blast cleaning to pure metal surface. Mill scale, rust and foreign matter shall be removed completely. Finally the surface is cleaned with a vacuum cleaner, clean dry compressed air or a clean brush. Then the surface shall have a uniform metallic colour and correspond in appearance to the print designated as Sa-3.

05.04 SAND BLASTING

05.04.01 The sand used for sand blasting shall contain not less than 94% SIO2. Dried sand with moisture content not exceeding 2% shall be used. Sand shall be sharp clean and free from clay and other deleterious materials (Grain size 0.6mm-2mm). After sand blasting the surfaces shall have appearance as mentioned in the grade of surface preparation.

05.04.02 Sand blasting shall be done with the help of compressed air at a gauge pressure of approx. 3 kg/cm2. The blasting nozzle shall be held not more than 20 to 30 cm from the surface being cleaned and the angle between the nozzle and the surface shall be around 75°.

05.04.03 The compressed air to be used for sand blasting shall be clean of all traces of oil and water by passing it through an oil and water separator. To check that the air blast is free of oil and water, its stream shall be directed towards a sheet of white filter paper, which should not develop any spot of oil or water after a period of minimum 30 seconds. This check on the satisfactory working of oil and water separator must be carried out before start of every shift.

05.05 SHOT BLAST CLEANING

05.05.01 In this process, abrasive particles are directed at high velocity against the metal surface through compressed air or high-pressure water thrown by centrifugal force from an impeller wheel. The abrasives used are chilled iron grit, cut steel wire, copper/iron slag etc. The procedure of shot blasting shall be as per relevant Indian Standards.

05.06 FLAME CLEANING

05.06.01 Flame cleaning shall also be carried out with the help of a special oxy-acetylene torch and the loosened mill scale shall be removed with a wire brush. This process is not recommended for cleaning steel sheet or plates less than 6 mm in thickness as it may lead to buckling .The number of flame passes on such surface shall be limited to three. The primer coat of paint shall be applied when the surface is still warm, after removing the scales with brushing and wiping.

© 2022 MECON Limited All rights reserved

05.07 GENERAL INSTRUCTIONS FOR PAINTS AND PAINTING

05.07.01 For use of specific painting system, the paint manufacturer's specification shall prevail.

05.07.02 General compatibility between primer and finishing paints shall be established through the paint manufacturer supplying the paints.

05.07.03 Before buying the paint in bulk, it is recommended to obtain sample of paint and establish "Control Area of Painting". On control area surface preparation and painting shall be carried out in the presence of manufacturer of paint.

05.07.04 In order to ensure that the supplied paint meets the stipulation in design drawing/ specification, if required, samples of paint shall be tested in laboratories to establish quality of paint with respect to (i) Viscosity (ii) adhesion/ bond of paint in steel surfaces (iii) adhesion/simulated salt spray test (iv) chemical analysis (percentage of solids by weight) (v) normal wear resistance as encountered during handling & erection (vi) resistance against exposure to acid fumes etc. Whole quantity of paint for a particular system of paint shall be obtained from the same manufacturer.

05.07.05 Thinners, wherever used, shall be as per recommendation of the paint manufacturer.

05.07.06 Areas, which become inaccessible after assembly of structures shall be painted before assembly, after cleaning the surfaces as specified.

05.07.07 Wherever shop primer painting is scratched, abraded or damaged, the surfaces shall be thoroughly cleaned using emery paper and power driven wire brush wherever warranted, and touched up with corresponding primer. Touching up paint shall be matched and blended to eliminate conspicuous marks.

05.07.08 If more than 50% of the painted surface of an item requires repair, the entire item shall be mechanically cleaned and new primer coats shall be applied followed by finishing coats as per painting specification.

05.07.09 All field-welded areas on shop painted item shall be mechanically cleaned (including the weld area proper, adjacent areas contaminated by weld spatter or fumes and areas where existing primer. intermediate / finishing paint is burnt). Subsequently, new primer and finishing coats of paint shall be applied as per painting specification.

05.07.10 Application of paint shall be by spraying or brushing as per IS:487-1985 and in uniform layers of 50% overlapping strokes. Painting shall not be done when the temperature is less than 5°C or relative humidity more than 85%, unless manufacturer's recommendations permit. Also painting shall not be done in frosty or foggy weather. During application, paint agitation must be provided wherever such agitation is recommended by the manufacturer.

© 2022 MECON Limited All rights reserved

05.07.11 Paint shall be applied at manufacturer's recommended rates. The number of coats shall be such that the minimum dry film thickness (DFT) specified is achieved. The dry film thickness of painted surfaces shall be checked with Elcometer or measuring gauges to ensure application of specified DFT.

05.07.12 All structures shall receive appropriate number of primer and finishing coats in order to achieve overall DFT as per design drawings/ specifications. First coat of primer paint shall be applied not later than 2-3 hours after preparation of surface, unless specified otherwise.

05.07.13 The finishing paint as specified shall be of approved colour and quality. The under coat shall have different tint to distinguish the same from the finishing coat.

05.07.14 Edges, corners, crevices, depressions, joints and welds shall receive special attention to ensure that they receive painting coats of the required thickness.

05.07.15 Machine-finished surface shall be coated with white lead and tallow before shipment or before being put into the open air.

05.07.16 Parts of surfaces embedded in concrete shall be thoroughly cleaned of grease, rust, mill scale etc. and shall be given a protective coat of portland cement slurry immediately after fabrication. No paint shall be applied on this part.

05.07.17 Zinc-rich primer paints, which have been exposed several months before finishing coat is applied, shall be washed down thoroughly to remove soluble zinc salt deposits. In similar circumstances, the surfaces of paint based on epoxy resin should be abraded or lightly blast cleaned to ensure adhesion of next coat.

05.07.18 Surfaces which cannot be painted but require protection shall be given a coat of rust inhibitive grease according to IS:958-1975 or equivalent international standard.

05.08 PAINTING SYSTEM

The recommended painting system for general service requirement of steel structures covering surface preparation, application of primer coats, intermediate coats (if necessary) and final coats to develop the required minimum dry film thickness on steel surface is indicated below.

CHOICE OF PAINTING SYSTEM

1. PAINT SYSTEM-P1 (General service paint without intermediate coat, for Inland structures without corrosive chemical environment).

i) Surface preparation: -St-2 according to Swedish Standard SIS055900.

ii) Primer paint: - Two coats of zinc phosphate in phenolic alkyd medium (DFT = 35 microns/coat).

© 2022 MECON Limited All rights reserved

iii) Finishing paint :- Two coats of synthetic enamel (DFT=25 microns/coat) conforming to IS:2932 -1974.

2. PAINT SYSTEM-P2 (General service paint with intermediate coat for moderately humid condition, 10-15 km away from coast)

i) Surface preparation: - ST-3 according to Swedish Standard SIS055900.

ii) Primer paint : Two coats of zinc phosphate in phenolic alkyd medium (DFT=35 microns/coat).

iii) Intermediate paint :- One coat of synthetic MIO i.e. micaceous iron oxide (DFT=75 microns).

iv) Finishing paint :- Two coats of synthetic enamel(DFT= 25 microns/coat) as in 1(iii) above.

3. PAINT SYSTEM-P3 (Epoxy based paint for chemical corrosion in both acidic and alkaline medium or for structures located within 10-15 Km from coast or for long service life of structures.

i) Surface preparation :Sa 21/2 according to Swedish Standard SIS055900.

ii) Primer paint: -Two coats of epoxy based red oxide or zinc phosphate (DFT =40 microns/coat).

iii) Intermediate paint :- One coat of epoxy based MIO, i.e., micaceous iron oxide (DFT = 75 microns).

iv) Finishing paint : - Two coats of epoxy amine/polyamide cured finish (DFT = 40 microns/coat).

4. PAINT SYSTEM-P4 (Chlorinated rubber based paint for mild chemical corrosion in acidic medium only and also for coastal areas).

i) Surface preparation :- Sa 21/2 according to Swedish Standard SIS055900.

ii) Primer paint : Two coats of chlorinated rubber based zinc phosphate (DFT =35 microns/coat).

iii) Intermediate Paint :- One coat of chlorinated rubber based micaceous iron oxide (DFT =75 microns).

iv) Finishing paint : Two coats of chlorinated rubber based paint with suitable pigments (DFT=30 microns/coat).

5. PAINT SYSTEM-P5 (High build coat tar epoxy paint for structures submerged in water, where subsequest maintenance is possible).

i) Surface preparation :- Sa 21/2 according to Swedish Standard SIS055900.

© 2022 MECON Limited All rights reserved

ii) Primer paint : - Two coats of epoxy based red oxide or zinc phosphate (DFT =40 microns/coat).

iii) Finishing paint : - Two coats of epoxy coal tar coating (DFT =100 microns/coat).

6. PAINT SYSTEM-P6 (High build coal tar epoxy paint for structures submerged in water where no subsequent maintenance is possible. This paint system is compatible with cathodic protection system).

i) Surface preparation : Sa -21/2 according to Swedish Standard SIS055900.

ii) Primer paint : -One coat of ethyl silicate (DFT =60-70 microns).

iii) Intermediate paint :- One coat of Epoxy based zinc phosphate (DFT = 25-30 microns).

iv) Finishing paint : - Two coats of coal tar epoxy High Build (DFT =150 microns/coat).

v) Total recommended DFT for the paint system = 400 ± 25 micron

7. PAINT SYSTEM-P7 (Heat resistant paint for range of temperature = 80îC - 200îC)

i) Surface preparation :- Sa-21/2 according to Swedish Standard SIS055900.

ii) Painting :- One coat of heat resistant black/ aluminium paint on cleaned cold surface only (DFT = 15-20 microns), before despatch from shop. Subsequently, apply two coats of same paint (DFT =15-20 microns/coat) after erection.

8. PAINT SYSTEM-P8 (Heat resistant paint for range of temperature = 200îC - 400îC)

i) Surface preparation :- Sa-3 according to Swedish Standard SIS055900.

ii) Painting :- One coat of inorganic zinc silicate on cleaned cold surface only (DFT = 65-75 microns). Subsequently, apply two coats of heat resistant finishing paint of silicone based aluminium (DFT =15-20 microns/coat).

9. PAINT SYSTEM-P9 (Part of steel structures embedded in concrete)

i) Surface preparation St -2 according to Swedish Standard SIS055900.

ii) One coat of portland cement slurry upto level up to which structural parts are embedded in concrete.

10. PAINT SYSTEM-P10 (for inner surface of rain water gutters)

i) Surface Preparation & Primer Paint - Adopt Paint system P1, P2, P3 or P4 as per requirement.

© 2022 MECON Limited All rights reserved

ii) Finishing Paint - Two coats of wear resistant bituminous paint (DFT = 75 microns / coat)

Note :- For paint system P-7 & P-8 (i.e. heat resistant paints), application of paint by brush is recommended.

SECTION 06 – CLADDING OF BUILDINGS WITH SHEETS

06.01 SCOPE OF WORK

06.01.01 The scope of work shall cover:

a) Preparation of drawings showing layout and size of sheets used, details of connections and flashings, bill materials.

b) Procurement and supply sheets of all gauges and sizes, flashings and fittings like corner pieces, apron pieces, ridges, cutting and bending of sheets wherever required; drilling of holes all as per specification and drawings.

c) Procurement and supply of permanent colour coated (non-insulated) metal cladding system for roof and sides of the building. All flashings, trim closures, caps etc. required for metal cladding system will be made out of 1mm thick (base metal thickness) plain M.S/High Tensile sheets having same material that of metal cladding and coating specification.

d) Procurement and supply of GI hook bolts and nuts, GI stich bolts and nuts, clips, bitumen washers, GI diamond or limpet washers.

e) Loading, transportation, unloading and delivery of sheeting material from place of procurement to erection site.

f) Provision of all tools, tackles, equipment, labour supervision and services required for the satisfactory completion of the work specified herein and on the drawings.

g) Erection in position sheets for roofing, walling, louvres; erection of all flashings, fittings like ridges, valleys, gutters, corners, apron etc. at all locations all work as per drawings and specifications.

h) All necessary galvanised flashings, ridging, capping, gable and corner trimming shall be made from galvanised plain sheets in line with the gauge of roof/side covering where it is used. Where connection between two different gauge sheetings is involved thickness corresponding to lower gauge may be used.

i) Suitable Wind Ties (galvanised steel flats) shall be provided after fixing of sheets, at the free edge of sheeting.

© 2022 MECON Limited All rights reserved

j) Steelwork coming in direct contact with aluminium sheets shall be treated with two coats of zinc based primer and one coat of aluminium paint as topping coat.

06.02 MATERIAL

a) GCS sheets shall conform to material GC - Grade O having grade of zinc coating=275 gm/sq.m and depth & pitch of corrugation = Grade A in accordance with IS:277-1992. 1 mm thick sheet shall be used in roof and 0.8 mm thick sheet shall be used in side sheeting.

b) Troughed zinc-aluminium alloy coated not less than 150 gm/sqm M.S sheets having 0.8 mm minimum base metal thickness (or High tensile steel sheet of 0.6mm minimum base metal thickness) will be used for the cladding system, both for roof and at all four sides. The outer side (exposed face) will be permanently colour coated with PVF2 paint of minimum DFT 20 microns over primer and the inner side (internal face) will be coated with same paint of minimum DFT 12 microns over primer. These will be fixed directly to purlins/runners. The sheets will meet the general requirements of 14246-1995 and will conform to class 3 for the durability.

c) Translucent Sheets made froom polycarbonate sheets of minimum thickness 3.0mm conforming to classification 14443*PCISP*LH49*2521as per IS-14443-1997.

d) Aluminium Industrial Troughed sheets conforming to IS:1254-1990 shall be used. 0.9 mm thick sheet shall be used in roof and 0.71 mm thick sheet shall be used in side sheeting.

e) Translucent Sheets shall conform to IS : 12866 –1989.

f) Glazing shall be 6 mm thick rough cast wired glass as per IS : 3548-1988

06.03 FIXING OF SHEETS

06.03.01 Sheets shall be fixed as per this specification.

06.03.02 Fixing of the roof and side sheeting (CGS/ Aluminium) to purlins shall be by means of 8 mm dia galvanised hook bolts and clips. All fixing accessories shall conform to IS:730-1978.

06.03.03 All bolts shall pass through the crown of the corrugations for roof sheets and through trough corrugations for side sheets. CGS sheets are to be provided with galvanised steel diamond or limpet washer over bituminous felt washer. Aluminium sheets shall be provided with aluminium curved / flat washers over neoprene / bituminous felt washers. Fixing too the purlins shall be provided

© 2022 MECON Limited All rights reserved

through at least every fourth corrugation for CGS sheets. Hook bolts shall be placed at a maximum of 3 pitches apart for troughed aluminium sheets.

06.03.04 The sheets shall be stitched together by 6 mm dia. galvanised screw and nuts at 300 mm centres. In case of double side lap the pitch has to be staggered between alternative crowns. A steel washer and bitumen felt washer is to be provided under the head of the screw which shall always be on the outside the building.

06.03.05 All holes for sheetings and flashings are to be drilled at site with electric drill from the bottom side of the crown. The method of drilling shall be such that the material fits snugly together at laps to allow washers to have a good seating.

06.03.06 Necessary fixures, lapping and stiching of roof and sides for colour coated troughed steel sheet / translucent sheet made of polycarbonate sheet shall be as per manufacture's recommendation. The Tenderer shall stand guarantee of erection for leakproofness and securedness of sheets to purlins and side runners.

06.03.07 All roofing shall be provided with one and a half corrugation side lap and 230 mm end lap for roof slopes 15 ° and below. For roof slopes above 15° end laps may be reduced to 150 mm.

06.03.08 All side/gable end sheets shall be provided with single corrugation side lap and 100 mm end lap.

06.03.09 Overhang of sheets on the roof and side cladding shall not exceed 300 mm.

06.03.10 Erection is to be carried out with the lay of the side laps such that under the prevailing wind, rain is not driven into the lap. The sheets shall be laid so that side laps in any two consecutive rows are staggered.

06.03.11 Broken or otherwise damaged sheeting shall not be erected.

06.03.12 Cutting, framing and trimming of all openings required shall be carried out at site.

06.03.13 Over hang of the sheets on the roof and side cladding shall not exceed 300 mm.

© 2022 MECON Limited All rights reserved

SECTION 07 – SPECIAL CONDITION OF CONTRACT

07.01 QUOTATION

07.01.1 The bidder should ascertain himself, by a visit to the site if necessary, the actual site conditions, local factors etc. The Contractor shall bear full responsibility for deductions and conclusions as to the nature and conditions under which the work is to be executed, including effect of climate, rainfall etc. Failure to do so will not absolve the Contractor of his responsibilities about the proper execution of the job. No claims for extra payments due to any special site conditions and ignorance of site conditions will be considered after the acceptance of his quotation.

07.01.2 The contractor shall indicate his price as per Schedule of Quantities given in **ANNEXURE Project Specific TS.**

07.01.3 The enclosed bid drawings / documents are deemed to be sufficient for the bidder to assess the nature and quantity of work involved and to quote his prices for the above job. No payment on account of deviations from the bid drawings will be admissible.

07.01.4 The cost of MS bolts (permanent and erection), washers, electrodes, putty, gases, cost of straightening the raw materials (hot bending not permitted), cutting of flats from plates and providing splices, paints, tool, plants, etc. as required for the work shall be deemed to be included in the quoted price.

07.01.5 All handling and transport charges of raw materials and fabricated structures, including double handling if required, for completion of the work in accordance with time schedule are deemed to be included in the quoted price.

07.01.6 Cost of NDT of welds as per specification shall be borne by the Contractor. For the welds found defective, the cost of retest shall be borne by the contractor in addition to the cost of rectification or replacement of the defective part.

07.02 PROGRAMME

07.02.01 A monthly time bar chart for various activities like procurement of steel, preparation and approval of fabrication drawings, fabrication, despatch to site, erection and alignment, sheeting and painting etc. giving starting and completion dates of all activities, shall be submitted along with the bid without which the bid may not be considered for evaluation.

07.02.02 The contractor shall also furnish his overall planning of construction programme, the capacity of equipment he proposes to deploy on various components of work etc. for prior approval of purchaser.

© 2022 MECON Limited All rights reserved

07.02.03 All programmes on procurement of raw steel and other materials, preparation of drawings, fabrication and despatch shall match with the sequence of erection of different structural components and different building/units, of the project as per network planning.

07.02.04 The purchaser may change or alter the detailed working programme for the sequence of work and for the fabrication of components of structures, within the frame work of the agreed schedule, which will be binding on the Contractor.

07.02.05 If due to design or other stipulations in the bid or requirements at site, a particular sequence of overall construction has to be followed due to which certain interruptions to any one or more items of work are inherent, no claims for such interruption will be admissible.

07.03 DRAWINGS

07.03.01 The Contractor will be supplied with **two** copies of design drawings by the Purchaser.

07.03.02 Based on the design drawings, the Contractor shall prepare general arrangement/marking drawings, fabrication drawings, erection drawings, bill of materials, shipping documents and nut and bolt lists. Bill of materials shall form part of fabrication drawings and shall be included in the body of the drawing or prepared separately. Two copies of drawings and documents shall be submitted to the Purchaser for their scrutiny and approval. One set of the Fabrication drawings will be returned to the Contractor with a stamp signifying "Approved", "Approved as noted" or "Not Approved" on the drawing. After the final approval by the Purchaser the Contractor shall furnish to the Purchaser within 2 weeks **11** copies of the approved Fabrication drawings, and erection drawings.

07.03.03 Despite approval of purchaser, Contractor shall not be relieved of his responsibilities for the accuracy of the detailed dimensions shown thereon and the safety of all structural connections as per forces indicated in the design drawings.

07.03.04 Soon after the fabrication of steel work pertaining to a particular drawing is completed, immediate steps shall be taken by Contractor to incorporate in the approved fabrication drawings, all the authorised corrections, additions and alterations made during the course of fabrications and 2 sets of the same shall be submitted to purchaser for his record.

07.03.05 Notes on specifications shown on design drawings shall be considered as superseding or overriding the specifications given elsewhere, with which they conflict. On all drawings, dimensions shown in figures shall be acted upon.

© 2022 MECON Limited All rights reserved

07.03.06 Two sets of erection drawings shall be submitted to the Purchaser showing thereon all authorised additions and alterations during the process of erection. These drawings shall be treated as "As Built" drawings.

07.03.07 Supply and distribution of fabrication drawings and other documents like bolt list, etc. for the Contractor's own use or for the use of his Sub- contractors shall be the responsibility of the Contractor.

07.04 MATERIAL

07.04.01 The Contractor shall arrange and procure all steel sections, plates, Colour coated troughed steel sheets, GCS sheets, Polycarbonate sheets, glazings, flashings, fixtures and fittings required for sheeting and glazing, aluminium or MS astragals and frames for glazing , clips, all the consumables like bolts, turned and fitted bolts, nuts including spares and service bolts, washers of different types, electrodes, gas, shims, packs, paints, etc. for completing the work satisfactorily and the cost of the same shall be deemed to have been covered in his quoted price.

07.04.02 If assistance is required by the contractor in obtaining permits/ priorities in allotment of controlled/scarce materials, if any the may be extended by the purchaser by way of issue of recommendation letter, essentiality certificate etc. to Government Authorities. Delay, if any , in obtaining the materials will not constitute a ground for claiming any compensation or extended time.

07.04.03 Where any raw materials required for the execution of the contract is procured with the assistance of the Purchaser or permit/ licence/quota certificates or release order issued by or on behalf of or under authority of Purchaser or any officer empowered on their behalf by law, or where advance payment is made to the Contractor to enable him to purchase such raw material for execution of work , the Contractor :-

a) shall hold such materials as trustee for the Purchaser.

b) Shall use such materials economically and solely for the purpose of the contract.

c) Shall not dispose of the same without prior permission in writing from the Purchaser.

07.04.04 The Purchaser may plan to procure and supply from the producers/stockyards major items of structural steel such as RS Joists, channels, angles, plates etc., required for the work. In that case these will be supplied to the Contractor in the indented lengths or standard lengths available, as received from the suppliers.

© 2022 MECON Limited All rights reserved

07.04.05 When steel is to be supplied by Purchaser, the Contractor shall be made the consignee for receiving all such steel materials. On receipt of materials at the nearest rail head, he shall be responsible for clearing, unloading and transporting the materials to his stockyards/place of work at his own cost. All demurrage due to any delay in clearing and /or unloading the steel materials shall be borne by the Contractor. The Contractor shall keep the purchaser informed of the receipt of materials regularly.

07.04.06 When material is issued from Purchaser's stores, the Contractor shall be responsible for taking delivery at the stores and make his own arrangement for transporting the materials to the place of work.

07.04.07 Purchaser reserves the right to take back such sections or quantity of steel issued in excess of the quantity as per Fabrication drawings plus permissible wastage. The Contractor shall return to the Purchaser all such steel supplied in good and acceptable condition. In case of failure of the Contractor to return such surplus steel on demand by Purchaser, Purchaser reserves the right to recover the cost of such steel at rate as per GCC.

07.04.08 In case the steel is procured by the Contractor, test certificates for the same shall be made available to the Purchaser.

07.05 MATERIAL ACCOUTING

07.05.01 For the purpose of accounting of materials supplied by Employer, free or on cost recoverable basis, the following wastage including rolling margin (1%), invisible wastage (1%) and cut pieces of less than one meter length and plates with lesser dimension less than 300 mm shall be allowed.

a) Structural Steel : i) Sections - 5% on the quantity by weight computed, based on Fabrication drawings.
ii) Plates - 7.5% on the quantity by weight computed, based on Fabrication drawings.

b) Other materials : 5% on the quantity by weight computed, based on manufacturing drawings.

07.05.02 All cut pieces after allowing for invisible wastage (cutting and burning losses) and rolling margins of maximum 2% of total quantity shall be returned to the Employer.

07.06 CONTRACTOR'S RESPONSIBILITY

© 2022 MECON Limited All rights reserved

07.06.01 The Contractor shall at his own cost properly store all materials brought by him to the work site/ Fabrication shop to prevent damage due to rain, wind, direct exposure to sun etc. and also from theft/pilferage etc.

07.07 EQUIPMENT

07.07.01 All construction and equipment once brought by the Contractor within the Project Area, are not to be removed from there without the written authority from the purchaser.

07.08 DESPATCH OF FABRICATED MATERIALS

07.08.01 The Contractor is solely responsible for any loss or damage during transit to any of the fabricated members, and as such proper precautions shall be taken by him to guard against such mishaps.

07.09 SETTING OUT

07.09.01 The Contractor shall be responsible for checking the alignment and levels of foundations, correctness of foundation, centres of anchor bolts etc. well in advance of starting erection work and shall be responsible for any consequence for non-compliance thereof. Discrepancies, if any, shall immediately be brought to the notice of the Purchaser. Any mistake subsequently found in alignment and levels of the structural steelwork due to non-verification of foundation before erection shall be corrected by the Contractor at his own expense.

07.09.02 The set of reference axes and one bench mark level will be rurnished to the Contractor. These shall be used for setting out of structures. Maintenance of such bench mark level shall be the responsibility of the Contractor.

07.09.03 The Contractor at his own expenses shall provide measuring instruments for setting out, leveling and aligning steelwork.

07.10 STAGING

07.10.01 Any staging necessary for the pre-assembly work of structures shall be provided by the Contractor at his own expense.

07.11 RULES & REGULATIONS OF SAFETY, ELECTRICITY BOARDS, FACTORY ETC.

07.11.01 The Contractor shall at all times comply with all relevant factory acts, electricity rules, safety regulations etc. as per statutory regulations of Central / State Government.

© 2022 MECON Limited All rights reserved

07.12 DEVIATIONS

07.12.01 Should the Contractor wish to deviate from any specification or details shown on the purchaser's approved drawings and / or Technical Specifications, he shall obtain the purchaser's written authority before proceeding with the deviations.

07.13 BASIS OF PAYMENT

07.13.01 The tenderer shall give the break-up prices as required in the Schedule of Items. As the quantities mentioned are estimated quantities, payment will be made on the actuals as per the agreed rates.

07.14 EXTRA ITEMS

07.14.01 Works which are not included in the schedule of items but which are required to be carried out for completion of the project, shall be carried out as per specifications, drawings,and /or sketches to be issued by the Purchaser. The payment for such items shall be based on rates to be derived wherever possible from available agreed rates. If such derivation of rates is not possible, the rates for such items shall be derived on the basis of actual cost of materials, labour and transportation, which shall be substantiated with relevant documents and records by the Contractor and verified by the Purchaser or his authorised representatives. An overall margin of 15 % towards cost of overhead and profit will be allowed.

07.15 MEASUREMENTS

07.15.01 STRUCTURAL STEEL

Structural steelwork will be measured by the metric tonne and as per IS:1200 (part-8)- 1993 and IS:1200 (part-9)-1973 subject to provisions outlined below:-

a) The calculation of quantities shall be based on unit on weights for structural sections as given in IS:808-1989 . In the case of mild steel/SAIL-MA Steel plates, the calculated weights shall be based on 78.5 kg per square metre per centimetre thick plate. The payments will be made on the basis of weights of members given in the approved fabrication drawings. However, any changes on the above weights during fabrication erection, payment shall be based on sketches Approved by the purchaser.

b) In the event the I.S. does not specify any mode of measurement for a particular item of work, the same shall be measured as per any other relevant international standard or as directed by the Purchaser.

c) The weight of all plates and sections shall be calculated from the approved drawing using the minimum overall square or rectangular dimensions and theoretical weight, no deduction being made for skew cuts, holes etc. In the case of plates, other than gussets, the actual dimensions shown on approved drawings

© 2022 MECON Limited All rights reserved

will apply unless approved otherwise by the purchaser based on cutting diagram of mother plates.

d) The weight of all welding runs, bolt, stanchion base packing, cuttings to waste and rolling margins, and coatings of paint, will be excluded from the measured weight and shall be deemed to have been allowed for in the rates for structural steelworks quoted by the Contractor.

e) Temporary works and all other materials not included in the permanent works shall be excluded from any measurement for payment.

07.15.02 **CLADDING SHEETS**

a) Sheeting for roof slopes, louvres of big size and side cladding shall be measured by the square metre of net laid area, as specified and shown on the drawings.

b) No allowance shall be made for wastage, cut-outs, overlaps etc. in the measurement.

c) The unit of measurement shall include all fasteners, flashings and fittings such as ridges, corners, aprons and other accessories.

d) No deductions shall be made for openings for area less than a single sheet. Also no extra payment will be made for making opening and installing ventilation chimneys on roof.

07.16 PRELIMINARY ACCEPTANCE

07.16.01 After completing the erection of a unit or portion thereof, the Contractor shall give a notice in writing stating that the job is complete in all respects and ready for preliminary acceptance. The job shall be jointly inspected visually by representatives of Contractor and Purchaser. All observed defects and omissions as per drawing and specification shall be noted down. If the defects are not major in the opinion of the purchaser/Purchaser's representative, the Contractor will be issued a preliminary acceptance certificate mentioning the defects, deficiencies and omissions which shall be made good by the Contractor within a period of 4 weeks.

07.17 FINAL ACCEPTANCE

07.17.01 Before commencement of inspection for final acceptance of the building or unit, the Contractor shall make available two complete sets of all drawings, representing "AS BUILT" drawing, (i.e. all additions and alterations done during fabrication and erection shall be incorporated in the drgs.

© 2022 MECON Limited All rights reserved

07.17.02 The Contractor shall make good all defects deficiencies and omissions noted down during preliminary acceptance and shall inform in advance the Purchaser/ his representative for conducting inspection for final acceptance. Final acceptance certificate will be issued by the Purchaser / his representative only after all defects / deficiencies / omissions noted under Preliminary Acceptance have been rectified.

07.18 MAINTENANCE & GUARANTEE

07.18.01 Commencing from the date of issue of final acceptance certificate or conclusion of Final acceptance tests, the Contractor shall stand guarantee for a period of 12 calendar months, for the satisfactory performance of steel structures of the unit. In the event of issue of more than one certificate by the Purchaser, maintenance period shall commence from the date of issue of last certificate for the particular unit. The Contractor shall replace/rectify all parts/components which become defective due to poor quality of material, bad fabrication or erection or due to any act of oversight or omission. Any leakage noticed in roof or side sheeting during this period shall be rectified or affected sheets shall be replaced. All such rectification or replacements of defective materials or workmanship shall be done free of cost by the Contractor.

© 2022 MECON Limited All rights reserved

ANNEXURE - A : PERMISSIBLE DEVIATIONS IN PITCH AND GAUGE OF HOLES FOR BOLTS AND RIVETS OF NORMAL ACCURACY (HIGH STRENGTH BOLTS INCLUDED)

Description	Hole diameter (mm)	Permissible deviations in spacing (mm)	Permissible deviations in each group of holes		
			Mild Steel	Low Alloyed Steel	
				Rivets	Bolts
Deviation in the hole diameter	Upto 17 Above 17	+1 +1.5	No limits	------	-------
Ovality (difference between the biggest and the smallest dia)	Upto 17 Above 17	+1 +1.5	No limits	------	-------
Curves, exceeding 1 mm and cracks on the hole edges	--------	---------	Not Permissible	-------	-------
Non-coincidence of holes in separate details of the assembled unit, • upto 1mm • 1-1.5 mm	---------	----------	Upto 50% Upto 10%	Upto 10% Not Permissible	Upto 50% Upto 10%
Slope of axis	--------	*	No limits	Upto 20%	No limits

* Upto 3% of the thk. Of unit but not exceeding 2mm in case of automatic and 3mm in case of manual pneumatic riveting. Anything exceeding the above mentioned figures is not permissible.

© 2022 MECON Limited All rights reserved

ANNEXURE –B : TOLERANCE OF ASSEMBLED COMPONENTS OF STRUCTURES

Description of Components of Structures	Deviation(±) in mm for the Elements of Structures (Length in Metres)						
	<1	1-5	5-10	10-15	15-20	20-25	>25
Deviations from the dimensions assembled.							
Length & width of the Details Cut :							
• Manual gas Cutting as per marking	3	3.5	4	4.5	5	-	-
• With shears or with a saw as per marking	2	2.5	3	3.5	4	-	-
• With shears or saw with a stop	1.5	2	2.5	3	3.5	-	-
• Machine Gas Cutting	2	2.5	3	3.5	4	-	-
• Length and width of planed ends processed on Edge Planing Machine	1	1.5	2	2.5	3	-	-
Distance between the Centres of the End holes							
• Drilled according to marking	2	2.5	3	3.5	4	-	-
• Drilled according to a gauge with bushing	1	1.5	2	2.5	3	-	-
Distance between the centres of Adjacent holes							
• Drilled according to marking	1.5	-	-	-	-	-	-
• Drilled according to a gauge with bushing	0.5	-	-	-	-	-	-
Deviation in the dimensions of despatch elements after completion of fabrication, Assembled in positioners or in other devices with clamps in fixed positioners and also							
• According to guide blocks with pins	2	3	5	7	8	9	10
• Assembled with bolts	3	5	8	11	12	14	15
• Size (length & width) between Milled surface (for all cases of assembly)	1	1.5	2	2.5	3	3.5	4
• The same made in separate details during machining & fixed during the assembling work with clamps	2	3	5	7	8	9	10
• The same drilled according to positioners in finished structures	1	1.5	2	2.5	3	3.5	4

© 2022 MECON Limited All rights reserved

ANNEXURE –C : EXTENT OF PERMISSIBLE DEVIATIONS IN ASSEMBLY OF WELDED JOINTS

	Description	Permissible Deviation	Diagram
1	Square Butt Joints • Gap between the ends of plates (d) • Stepping of one plate over the other (s)	±1 mm 1.0 mm	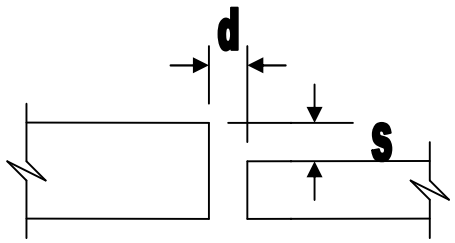
2	Single V-groove Joints • Bevel angle (A) • Gap betn. Two (d) • Stepping of one plate over the other (s) • Root thickness	±5° ±1.00 mm 2.00 mm 1.00 mm	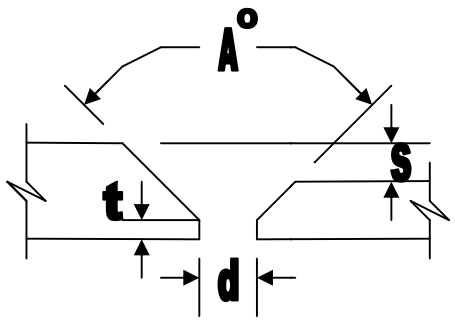
3	Double V-groove Joints • Bevel angle (A) • Gap betn. Two (d) • Stepping of one plate over the other (s) • Root thickness	±5° ±1.00 mm 2.00 mm 1.00 mm	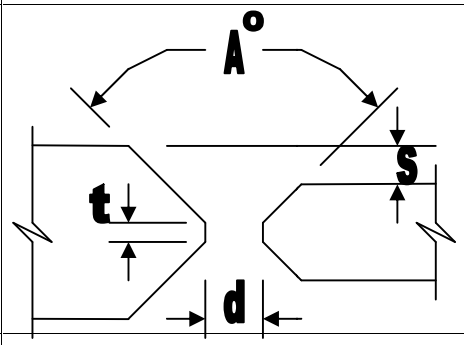
4	Lap Joints • Overlap (B) • Gap between the surfaces (e)	5.00 mm 1.00 mm	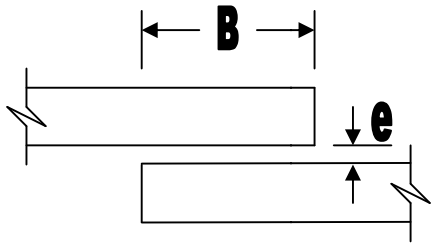
5	Tee Fillet Joints • Gap between the edge of the web and the surface of the flange (e)	2.00 mm	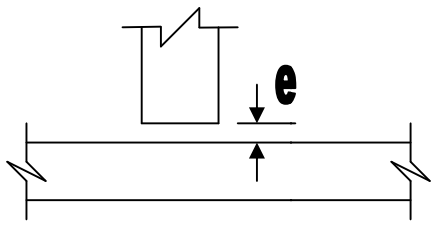

© 2022 MECON Limited All rights reserved

ANNEXURE – D : TOLERANCES IN ERECTED STEEL STRUCTURES

A. COLUMNS

S. N	Description	Tolerance (mm)
1.	Deviation of column axes at foundation top level with respect to true axes in Longitudinal / Lateral direction.	± 5
2.	Deviation in the level of bearing surface of columns at foundation top with respect to true level	± 5
3.	Out of plumbness (vert.) of column axis from true vertical axis and measured at column top : a) For columns without any special requirements : • Upto and including 30m • Over 30 m height b) For column with special requirements like cranes or such similar requirements : • Upto and including 30m • Over 30 m height	 ± H/1000 subjected to ± 25mm maximum ± H/1200 subjected to ± 35mm maximum ± H/1000 subjected to ± 20mm maximum ± H/1200 subjected to ± 35mm maximum
4.	Deviation in straightness in longitudinal & transverse planes of columns, at any point along the height.	± H/1000 subjected to ± 10mm maximum
5.	Difference in the erected position of adjacent pairs of columns along length or across width of building, prior to connecting trusses / beams, with respect to true distance.	± 5
6.	Deviation in any bearing or seating level with respect to true level.	± 5
7.	Difference in bearing levels of a member on adjacent pair of columns both across and along the building, from the true difference.	± 5

NOTES:
Tolerance specified under 3(a) and 3(b) should be read in conjunction with 4 and 5.
"H" above is the column height in mm.

© 2022 MECON Limited All rights reserved

B. TRUSSES

S. N	Description	Tolerance (mm)
1.	Shift, at the centre of top chord member of truss with respect to the centre of span or vertical plane passing through the centre of bottom chord.	± 1/250 of height of truss in mm at centre of span subjected to ± 15mm maximum.
2.	Lateral shift of top chord of truss at the centre of span from the vertical plane passing through the centre of supports of the truss	± 1/1500 of span of truss in mm subjected to ± 10mm maximum.
3.	Lateral shift in location of truss from its true vertical position.	± 10
4.	Lateral shift in location of purlins from true position	± 5
5.	Deviation in difference of bearing levels of trusses or beam from the true difference.	± L/1200 subjected to ± 20mm maximum. (where L=span)

C. CRANE GIRDERS & RAILS

S. N	Description	Tolerance (mm)
1.	Shift in the centre line of crane rail with respect to centre line of web of crane girder.	± (web thickness in mm + 2) / 2
2.	Shift in plan of alignment of crane rail with respect to true axis of crane rail at any point.	± 5
3.	Deviation in crane track gauge with respect to true gauge • For track gauge upto and including 15 m. • For track gauge more than 15 m.	 ± 5 ± [5+0.25(S-15)], subject to maximum of +10 mm, where S in metres is the true track gauge
4.	Deviation in the crane rail level at any point from true level	± 10
5.	Difference in levels between crane track rails (across the bay) at • Supports of crane girders • Mid span of crane girders	 15 20
6.	Relative shift of crane rail surfaces at a joint in plan and elevation	2 mm subject to grinding of surfaces both for smooth transition
7.	Relative shift in the location of crane stops (end buffers) along the crane tracks, along track gauge.	1/1000 of track gauge S in mm subject to maximum of 20 mm

© 2022 MECON Limited All rights reserved

D. CHIMNEY & TOWERS

S. N	Description	Tolerance (mm)
1.	Out of plumbness vertically from the true vertical axis	1/1000 of the height

E. BUNKERS

S. N	Description	Tolerance (mm)
1.	Deviation in length of bunker from true length	± 1/1000 of length
2.	Deviation in width of bunker from true width	± 1/1000 of width
3.	Deviation in height of bunker from true height	± 1/1000 of height

NOTES : -

1. The tolerances specified do not apply to steel structures where deviations from true positions are intimately linked with or directly influence the technological process. In such cases, the tolerances on erected steel structures shall be as per recommendations of process technologists / equipment suppliers.

2. The observed or calculated values of deviations of steel structures from their true positions shall be rounded off in accordance with IS:2-1960 for comparison with permissible tolerances specified in this table. The number of significant places retained in the rounded-off value should be same as that specified in this table.

3. Alignment of all structures true to line, level plumb and dimensions within specified limits of tolerances as per IS :12843 “Tolerance for Erection of Steel Structures”.

© 2022 MECON Limited All rights reserved

ANNEXURE – E: MATERIAL OF CONSTRUCTION (AS APPLICABLE)

1. Unless otherwise specified in the drawing :

   a) All rolled sections and plates upto 20 mm thk. shall conform to Grade-A of IS:2062-1992 and shall generally be of tested quality.

   b) Plates above 20 mm thk. and Plated structures subjected to dynamic loading shall conform to Grade-B as per IS:2062-1992.

   c) High strength micro-alloyed steel shall conform to SAIL-MA 350 HYA/HYB (SAIL product).

2. Steel sheets shall conform to IS:1079-1994.

3. Chequered plates shall conform to IS:3502

4. Steel tubes for structural purposes shall conform to IS:1161-1979 (Grade YST-240).

5. Crane rails shall conform to IS:3443-1980.

6. Collectors and downcomers shall be ERW410 pipes conforming to IS:3589-2001

7. All permanent bolts shall be of Grade B (semi precision) conforming to IS:1364(Part 2)-1991.The material of bolts shall be of Class 4.6 or as per requirement and conforming to IS:1367 -1991 unless noted otherwise. Hexagonal nuts for permanent bolts shall conform to IS:1364(Part 3) – 1983.

8. All erection bolts shall be black hexagonal bolt of Grade C conforming to IS:1363(Part 1)-1984. The material of bolts shall be of Class 4.6 and conforming to IS:1367-1991 unless noted otherwise. Hexagonal nuts for erection bolts shall conform to IS:1363(Part 3)-1984.

9. All washers shall conform to IS:1148-1982.

10. All HSFG bolts shall conform to IS:3757-1985. Nuts for HSFG bolts shall be of high strength conforming to IS:6623-1985 and hardened steel washers to IS:6649-1985.

11. Covered electrodes for arc welding shall conform to IS:814 - 1991. Electrode to be used for submerged arc welding shall conform specification IS:7280-1974. Coding of electrodes shall be as follows :-

    a) ER 421 'C' x for mild steel of Grade A and Grade-B as per IS:2062-1992.

    b) EB 542 'C' x H3X for

© 2022 MECON Limited All rights reserved

i) Mild Steel of Grade B as per IS:2062-1992 for dynamically loaded structures (arising out of crane, vibratory screen, equipment etc.)

ii) For SAIL-MA micro alloyed steel 350 HYA/HYB.

iii) When combined thickness (CT) for steel conforming to IS:2062-1992 exceeds 40mm as per Fig.1 below.

Where **"C"** is the value of current as recommended by the electrode manufacturer.

Fig. 1 – For Calculation of Combined Thickness(CT)

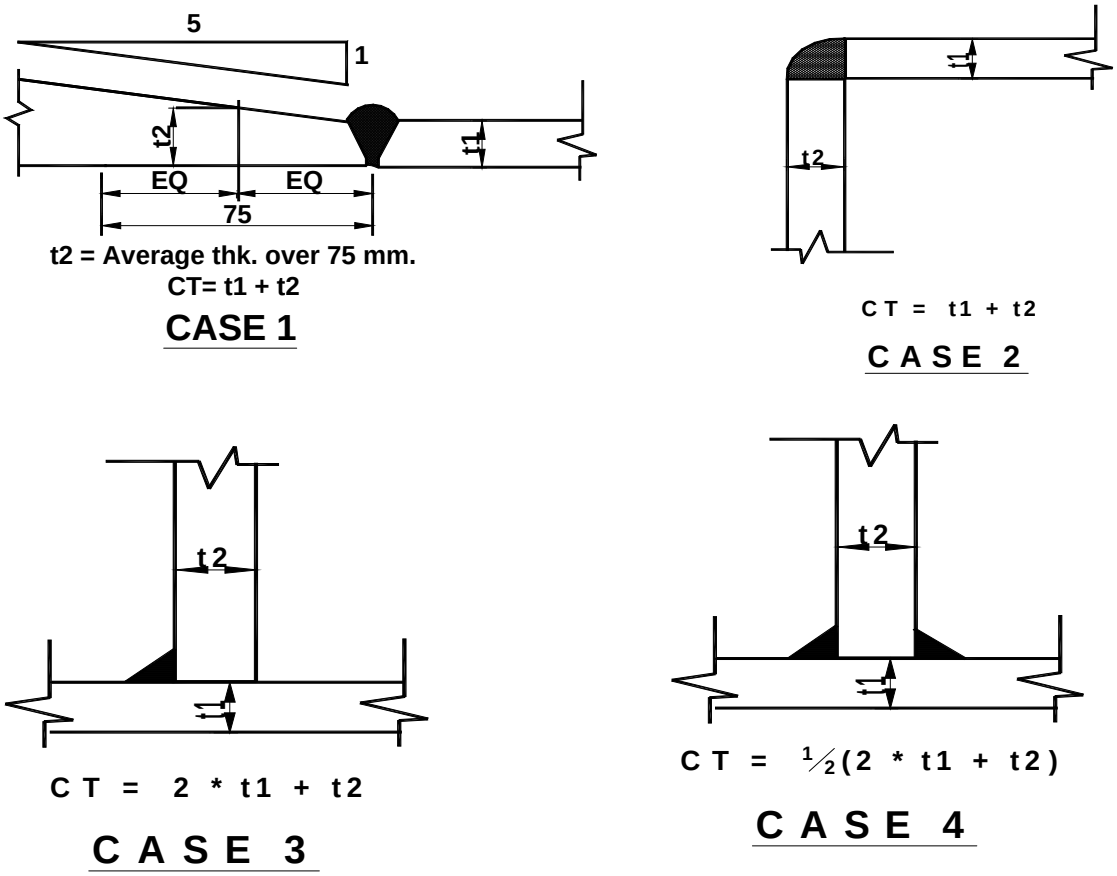

© 2022 MECON Limited All rights reserved

ANNEXURE-F: PERMISSIBLE DEVIATIONS IN FABRICATION & ERECTION

TABLE – 1

DUST CATCHER SHELL

Sl no	Description	Tolerance in mm
1	Ellipticity (max. difference between diameters) of the cylindrical and conical portions.	0.005 of the theoretical diameter of the cylinder and conical portion.

TABLE – 2

BLAST FURNACE SHELL

SL NO	DESCRIPTION	DEVIATION IN mm
1	Ellipticity (max. difference in diameters) of a course.	+ 0.002 of the theoretical diameter of the course.
2	Stepping of the edges of plates in the vertical and circular weld joint.	0.1 of shell thickness but not more than 3 mm.
3	Local warping of shell along the generatrix and periphery as measured by gauge over the length of 1500 mm.	Not more than 15 mm.
4	Caving in or bulging of joints measured by gauge over a length of 200 mm.	5

Note : H - height measured from the base of the point of alignment.

© 2022 MECON Limited All rights reserved

TABLE – 3

COVERAGE OF NDT FOR WELDS

SL NO	STRUCTURE	NORMS FOR CONTROLLING AS A % OF TOTAL LENGTH OF WELDING (NOT LESS THAN) FOR			PLACES TO BE SUBJECTED TO RADIOGRAPHIC TESTING COMPULSORILY
			RADIOGRAPHIC TESTING		
		ULTRA SONIC TESTING	MANUAL & SEMI-AUTOMATIC	AUTOMATIC	
1	BF Shell	100	3	2.0	Portions of the welded joint found defective by ultrasonic testing
2	Stoves, hot blast main & bustle main	100	10	1.5	Portions of the welded joint found defective by ultrasonic testing and crossing of welded joint
3	Dust catcher, Junction & places of variable cross sections by the following norms				
	(a)without ultrasonic testing	---	3	1.5	Crossing of welded joint
	(b)with ultrasonic testing	100	1	0.5	Portions of the welded joints found defective by ultrasonic welding
4	Portions of gas pipelines from BF to DC & DC to GCP	--	1	0.5	Portions of the welded joints found defective by ultrasonic testing

© 2022 MECON Limited All rights reserved

UTKARSHA ALUMINIUM DHATU NIGAM LIMITED

ESTABLISHING FACILITY FOR ALUMINIUM ALLOY MELTING, SLAB CASTING AND FLAT ROLLED PRODUCTS PRODUCTION FACILITY

GENERAL TECHNICAL SPECIFICATION
FOR
CIVIL WORKS
(GS – 07)

MECON LIMITED
RANCHI - 834002

No. MEC/S/11/35/Q7R6/GTS/01/R0 **JUNE' 2022**

LIST OF CONTENTS FOR GS - 07

INDEX

	MATERIALS	Page No.
PART - I	**PART-IA (Civil Works)**	**2- 36**
	PART-IB (Architectural Works)	**37-191**
PART - II	**WORKMANSHIP**	**192-368**
PART - III	**NORMS OF CEMENT CONSUMPTION**	**368-379**
PART - IV	**DIMENSIONAL TOLERANCE**	**379-387**
PART - V	**METHOD OF MEASUREMENT**	**387-401**
PART - VI	**SAFETY REQUIREMENTS FOR CONSTRUCTION WORK**	**401-416**
ANNEXURE-A	**LIST OF IS & IRC CODES REFERRED**	**416-437**
ANNEXURE-B	**LIST OF APPROVED MAKES (CIVIL & ARCHITECTURAL)**	**438-443**

© 2022 MECON Limited All rights reserved

SPECIFICATION FOR CIVIL WORKS
PART I - MATERIALS

CONTENTS

1.0 GENERAL

1.1 Scope

1.2 Standard

1.3 Approval and Tests

1.4 Codes

1.5 Rejection of Materials

2.0 MATERIALS FOR CONCRETE

2.1 Aggregates

2.2 Coarse Aggregates

2.3 Fine Aggregates

2.4 Lime

2.5 Surkhi

2.6 Cement

2.7 Water

2.8 Admixtures for Concrete

2.9 Interval of Routine Test

3.0 STEEL

3.1 Reinforcement

3.2 Binding Wire

3.3 Light Structural Work and Inserts

© 2022 MECON Limited All rights reserved

3.4 Steel Tubes

3.5 Foundation Bolts

3.6 Steel tubes for Non-structural use

3.7 Threaded Fasteners

3.8 Testing

3.9 Cast Steel

3.10 Conduits

4.0 BRICK AND STONES

4.1 Bricks

4.2 Handling

4.3 Samples and Inspection

4.4 Brick Bats

4.5 Laterite Stone Blocks

4.6 Stones (Granite, trap, sandstone and quartzite etc.)

4.7 Hollow and Solid Concrete Blocks

4.8 Fly Ash Bricks

4.9 Cement, Lime and Water

4.10 Sand for Masonry Mortar

5.0 SAND FOR PLASTERING

6.0 MATERIALS FOR FLOORING & PAVING

6.1 Cement & Binders

6.2 Aggregates

© 2022 MECON Limited All rights reserved

7.0 METAL DOORS, WINDOWS, VENTILATORS AND ROLLING SHUTTERS

7.1 General

7.2 Steel doors, Windows, Ventilators

7.3 Steel Rolling Shutter, Rolling Grills

7.4 M.S. Bolts etc.,

7.5 Hardwares

7.6 Mastic

8.0 WATERPROOFING MATERIALS

8.1 Integral Cement water proofing compounds

8.2 Bitumen

8.3 Bitumen Primer

8.4 Bitumen Felt

8.5 Bitumen Mastic

8.6 Bituminous Compounds

8.7 Surface Application Materials

8.8 Polymer based paints

8.9 Fibre glass R.P. Tissue

8.10 P.V.C. Membrane/sheet

9.0 WATER BAR

9.1 General

9.2 Jointing

© 2022 MECON Limited All rights reserved

10.0 LEAD

10.1 General

11.0 BUILDING PAPER/GYPSUM MATERIALS

11.1 Building paper

12.0 FILLING MATERIAL

12.1 General

12.2 Mastic Bitumen

12.3 Flexible Boards

13.0 DRAINAGE AND SANITATION (EXTERNAL)

13.1 General

13.2 P.V.C Waste Pipe

13.3 Stoneware Pipes & fittings

13.4 Sand Cast Iron Pipes and fittings

13.5 Cast Iron Pipes and AC pipes (Rain Water pipes)

13.6 Gully Trap

13.7 C.I. Manhole Cover and frames

14.0 EXTERNAL SEWERAGE & DRAINAGE

14.1 C.I. Pipes

14.2 Washers

14.3 Gaskets

14.4 Caulking Lead

14.5 Salt glazed stoneware Pipes

14.6 Steel pipes

14.7 Cast Iron Manhole Covers and frames

© 2022 MECON Limited All rights reserved

15.0 ROAD AND FENCING

15.1 General

15.2 Soling Stones

15.3 Aggregates for Granular Sub Base

15.4 Coarse aggregate for Water Bound Macadam

15.5 Coarse Aggregate for Wet Mix Macadam

15.6 Screenings

15.7 Stone Chips for Bituminous Surfacing

15.8 Sand

15.9 Binder

15.10 Kerbs

15.11 Galvanized steel Barbed wire for Fencing

15.12 Galvanized Steel Chain link fabric

16.0 MATERIALS NOT SPECIFIED

MATERIALS

1.0 GENERAL

1.1 Scope

This part deals with the requirements of materials for use in construction work with regard to quality, testing, approval and storage, before they are used on work. This part is supplementary to Part-II: Workmanship and Other requirements of the Technical Specifications for civil works.

1.2 Standard

A high standard of quality is required for all materials used in construction work. They shall be the best of the kind obtainable indigenously in each case and shall be procured from manufacturers of repute in order to ensure uniformity of quality and assurance of timely supply.

© 2022 MECON Limited All rights reserved

1.3 Approval and Tests

1.3.1 All materials to be used in construction shall be subject to approval of the Engineer. The Contractor shall apply sufficiently in advance with samples of the materials including the supporting test results from the approved laboratory and other documentary evidence from the manufacturer wherever applicable and indicating the types of materials and their respective sources. The delivery of materials at site shall commence only after the approval of the quality, grading and sources of the materials by the Engineer.

1.3.2 The quality of all materials once approved shall be maintained throughout the period of construction and periodical tests shall be carried out to ensure that it is maintained. Such routine tests shall be listed under the different materials and/or as may be ordered by the Engineer from time to time.

1.3.3 Where a particular "Brand" or "Make" of material is specified in the Schedule of Items or Technical Specifications, such "Brand" or "Make" of material alone shall be used on the work. Should it become necessary for any reason (such as non-availability/ceased to be produced), to use any material other than the specified "Brand" or "Make", the Contractor shall submit sample of the same to the Engineer for approval together with test certificates and other documents necessary for examining and giving approval thereof. Should such change or substitution of materials, subsequently approved, results in use of material of price lower than that of the material specified in the Schedule of Items or Technical Specifications, the rates of work affected by the substitution shall be proportionately reduced. Similarly, in case the substitution results in use of material of price higher than that specified in the Schedule of Items or Technical Specifications, the rates of work affected by the substitution shall be proportionately increased.

1.4 Codes

1.4.1 The years of publication against various standards, referred in the 'list of IS and IRC Codes (ANNEXURE-A)' of this specification, correspond to the latest standards as on date of preparation of this specification. During use of this specification in future, the latest publication as on date shall be referred to. Where standards are not yet published by the BIS or IRC, adoptable British Standards or other International Standards shall apply.

1.4.2 In case of any conflict in meaning between these specifications and those of BIS or IRC, or British /International Standard; the provisions of these specifications shall prevail.

1.5 Rejection of Materials

© 2022 MECON Limited All rights reserved

1.5.1 Any material brought to site which, in the opinion of the Engineer is damaged, contaminated, deteriorated or does not comply with the requirement of this specification shall be rejected.

1.5.2 If the routine tests or random site tests show that any of the materials, brought to site, do not comply in any way with the requirements of this specification or of I.S. Codes as applicable, then that material shall be rejected.

1.5.3 The Contractor at his own cost shall remove from site any and all such rejected material within the time specified by the Engineer.

2.0 MATERIALS FOR CONCRETE

2.1 Aggregates

2.1.1 Aggregates shall comply with the requirements of IS: 383 "Coarse and Fine Aggregates for Concrete". They shall be hard, strong, dense, durable, clean and free from veins and adherent coating, vegetable matter and other deleterious substances; and shall be obtained from approved sources. Aggregates shall not contain any harmful material such as pyrites, coal, lignite, shale or similar laminated material, clay, alkali, soft fragments, sea shells and organic impurities in such quantity as to affect the strength or durability of concrete. Aggregates which are chemically reactive with alkalies of cement shall not be used. Aggregates which are not sufficiently clean shall be washed in clean fresh water to the satisfaction of the Engineer.

2.1.2 Testing

All aggregates shall be subject to inspection and testing. The Contractor shall submit samples for testing as may be required by the Engineer. Sampling and testing shall be carried out in accordance with IS: 2386 "Methods of Test for Aggregates for concrete".

2.1.3 Grading

The Contractor shall ensure that the full range of aggregate used for making concrete is graded in such a way as to ensure a dense workable mix. The delivery of aggregates will commence only when the Engineer has approved the samples and the quality and grade shall be maintained consistent and equal to the approved sample. Before construction commences, the Contractor shall carry out a series of tests on the aggregates and on the concrete made therefrom to determine the most suitable grading of the available aggregates. Once the most suitable

© 2022 MECON Limited All rights reserved

grading has been found, the grading shall be adopted for the construction of the works and periodic tests shall be carried out to ensure that it is maintained.

2.1.3.1 Size and grading of fine aggregates

The grading shall conform to IS: 383 and shall be within the limits of Grading Zone-III. The maximum size of particle shall be 4.75mm and shall be graded down. Sand containing more than 10% of fine grains passing through 150 micron sieve or having the fineness modulus less than 2 shall not be used for concrete work.

2.1.3.2 Size and grading of coarse aggregates

The nominal maximum size of the aggregates for each mark of concrete or for each type of work shall depend upon the description of the particular item in the Schedule of Items and/or according to relevant clauses of IS: 456. The aggregates shall be well graded and the grading shall conform to relevant requirements of IS: 383 depending upon the maximum nominal size as specified or as required.

2.1.3.3 Fine aggregate for mortar and grout

The grading of fine aggregate for mortar and grout shall be within the limits of grading zone III and IV as defined in IS: 383.

2.1.4 Storage & stacking

Care shall be taken in the storage to avoid intrusion of any foreign materials into the aggregates and where two types of aggregates are stored close to each other, they shall be separated by a wall or plate. In case of stockpiling, care shall be taken to avoid forming pyramids resulting in segregation of different sized materials. The height of the stacks shall be generally limited to 150 cm.

2.2 Coarse Aggregates

2.2.1 Types

The type of coarse aggregate viz., stone chips, gravel or broken brick shall be as described in the Schedule of Items. Unless otherwise specified in the Schedule of Items, stone chips shall be used as coarse aggregate.

2.2.2 Stone chips

© 2022 MECON Limited All rights reserved

It shall be crushed or broken from hard stone obtained from approved quarries of igneous or metamorphic origin. The stone chips shall be hard, strong, dense, durable and angular in shape. It shall be free from soft, friable, thin, flat, elongated or laminated and flaky pieces and free from dirt, clay lumps, and other deleterious materials like coal, lignites, silt, soft fragments, and other foreign materials which may affect adversely the strength & durability of concrete. The total amount of deleterious /foreign materials shall not exceed 5% by weight according to relevant clause of IS: 383. If found necessary the stone chips shall be screened and washed before use.

2.2.3 Gravel

It can be either river bed shingle or pit gravel. It shall be sound, hard, clean, irregular in shape and suitably graded in size with or without some broken fragments. It shall be free from flat particles, powdered clay, silt, loam and other impurities. Before using, the gravel shall be screened and washed to the satisfaction of the Engineer. However, the foreign/deleterious materials shall not exceed 5% by weight.

2.2.4 Broken bricks / Brick aggregates

These shall be obtained by breaking well burnt or over burnt dense brick bats. They shall be homogeneous in texture, well graded in size, roughly cubical in shape, clean and free from dirt, clay, silt or any other deleterious matter. Before use, these shall be screened.

2.3 Fine Aggregates

2.3.1 Unless specified otherwise it shall either be natural river sand or pit sand.

2.3.2 Sand shall be clean, sharp, strong, angular and composed of hard siliceous material. It shall not contain harmful organic impurities in such form or quantities as to affect adversely the strength and durability of concrete. Sand for reinforced concrete shall not contain any acidic or other impurities which is likely to attack steel reinforcement. The percentage of all deleterious materials including silt, clay etc., shall not exceed 5% by weight. If directed, sand shall be screened or washed before use to the satisfaction of Engineer.

2.3.3 Crusher dust

Crusher stone dust (that is retained on 300 micron sieve) may be used as replacement for certain quantum of sand aiming to improve the fineness

© 2022 MECON Limited All rights reserved

modulus of fine aggregate. The quantum of replacement for sand shall be arrived at by suitable trial mixes. The Engineer will decide the final usage of crusher dust depending on the circumstances.

2.4 Lime

Lime for mortars and concrete shall conform to IS: 712 The total of CaO and MgO content in quick lime shall not be less than 85% (MgO shall not exceed 5%). Quicklime, after slaking, shall leave a residue of not more than 5% by weight on IS sieve 85.

2.5 Surkhi

Surkhi used in lime concrete for flooring, terracing etc., shall conform to IS: 3182. Surkhi shall be made from well burnt bricks or brickbats. Surkhi shall pass through I.S. sieve 3.35mm with at least 50 % of it passing through I.S. sieve 1.70mm and be perfectly clean and free from foreign matter. Surkhi shall not be made from bricks which have come in contact with any mortar.

2.6 Cement

Ordinary Portland cement (43 grade) / Portland slag cement complying with the requirements of IS:8112 and I.S. 455 respectively shall be used for making plain and reinforced concrete, cement grout and mortar.

Other types of cement may be used depending upon the requirements of certain jobs with the approval of the Engineer. These shall conform to the following standards:

Portland Pozzolana Cement	IS: 1489
Rapid Hardening Portland Cement	IS: 8041
33 Grade Ordinary Portland Cement	IS: 269
53 Grade Ordinary Portland Cement	IS: 12269
Hydrophobic Portland Cement ..	IS: 8043
High alumina cement for structural work	IS: 6452
White portland cement	IS: 8043

© 2022 MECON Limited All rights reserved

Sulphate Resisting Portland Cement IS: 12330

2.6.1 Testing of samples

The Contractor shall supply a copy of the manufacturer's test certificate for each consignment of cement supplied by him and consignments shall be used on work in the order of delivery. The Contractor shall supply samples of cement to the Engineer as frequently as he may require for testing. The sampling of cement for testing shall be according to IS: 3535. All tests shall be in accordance with the relevant clauses of IS: 4031 (Part-I to Part-15) & IS: 4032.

2.6.2 Contractor's responsibility

From the time a consignment of cement is delivered at site and tested and approved by the Engineer until such time as the cement is used on the works, the Contractor shall be responsible for keeping the same in sound and acceptable condition and at his expense and risk. Any cement which deteriorates while in the Contractor's charge and is rejected as unsuitable by the Engineer, shall be removed from the site to outside the limits of work at the cost of contractor within two days of ordering such removal by the Engineer.

2.6.3 Stock of cement

In order to ensure due progress, the Contractor shall at all times maintain on the site at least such stock of cement as the Engineer may from time to time consider necessary. No cement shall be used upon the works until it has been accepted as satisfactory by the Engineer.

2.6.4 Storage of cement

The cement shall be stored in such manner as to permit easy access for proper inspection and in a suitable weather-tight, well ventilated building to protect it from dampness caused by ingress of moisture from any source. Different types of cement shall be stored separately. Cement bags shall be stacked at least 15 to 20 cm clear of the floor leaving a space of 60 cm around the exterior walls. The cement shall not be stacked more than 10 bags high. Each consignment of cement shall be stacked separately to permit easy access for inspection.

2.7 Water

© 2022 MECON Limited All rights reserved

Water used for mixing concrete and mortar and for curing shall be clean and free from injurious amounts of oil, acid, alkali, salts, sugar, organic materials or other substances that may be deleterious to concrete or steel. The pH value of water shall generally be not less than '6'. Water has to meet the requirements mentioned in clause 5.4 of IS: 456. Water shall be obtained from an approved source.

Where it is obtained from a source other than a supply main, it shall be tested to establish its suitability. Water for construction purpose shall be stored in proper storage tanks to prevent any organic impurities getting mixed up with it.

2.8 Admixture for Concrete

2.8.1 Approval

Admixtures to concrete shall not be used without the written consent of the Engineer. When permitted, the Contractor shall furnish full details from the manufacturer and shall carry out such test as the Engineer may require before any admixture is used in the work.

2.8.2 Types

2.8.2.1 Integral water proofer

Admixtures used as integral water proofer shall be free of chlorides and sulphates and shall conform to IS: 2645. The application and doses shall be as per manufacturer's specification.

2.9 Interval of Routine Test

2.9.1 The routine tests of materials, delivered at site, shall be at the following intervals:

Aggregates	-	Fortnightly or for every 200 m3 for each aggregate whichever is earlier and in other respects generally as per IS: 2386 (Part 1 to 8).
Cement	-	Fortnightly or for each consignment, within 4 days of delivery and in other respects generally as per IS: 4031.

© 2022 MECON Limited All rights reserved

Water - Once in two months for each source of supply and in other respects generally as per IS: 456.

Reinforcement - For each consignment within 4 days of delivery in accordance with I.S. 1786, I.S. 1599 and I.S. 1608.

3.0 STEEL

3.1 Reinforcement

Reinforcing bars for concrete shall be round steel bars of the following types as may be shown on the drawing:

i) Plain mild steel bars conforming to Grade-I of IS: 432 "Mild Steel & Medium Tensile Steel for Concrete Reinforcement".

ii) "High strength deformed steel bars conforming to IS: 1786 for Concrete Reinforcement".

iii) Reinforcement fabrics conforming to IS: 1566 "Hard Drawn Steel Wire Fabric for Concrete Reinforcement"

All reinforcement bars shall be of uniform cross sectional area and be free from loose mill scales, dust, loose rust, coats of paint, oil or other coatings which may destroy or reduce bond. Unit weight of reinforcement bars conforming to I.S. 1786 is as given below.

Nominal Size (Dia) (mm)	Mass Per Metre Run (Kg)
6	0.222
8	0.395
10	0.617
12	0.888
16	1.580
18	2.000
20	2.470
22	2.980

© 2022 MECON Limited All rights reserved

25	3.850
28	4.830
32	6.310

3.2 Binding wire

Binding wire for reinforcement shall be annealed steel wire 20 BWG conforming to IS: 280 "Specification for Mild Steel Wire".

3.3 Light structural work and inserts

Steel for light structural work and for preparation of inserts and embedments shall conform to IS: 2062 "Steel for general structural purposes - Specification."

3.4 Steel Tubes

Steel tubes for use in light structural work and inserts shall be of light or medium class (as may be specified in drawings or the schedule of items) and of grade YST 25 conforming to IS: 1161 "Specification for Steel Tubes for Structural Purposes".

3.5 Foundation Bolts

3.5.1 Bolts to be embedded in concrete shall, unless otherwise detailed in drawings, conform to IS: 5624 "Specification for Foundation Bolts". Material for bolts, shall, unless otherwise mentioned in drawings or the schedule of items, be of steel conforming to IS: 2062.

3.5.2 Nuts and locknuts shall conform to IS: 1363 (Part 1 to 3) "Specification for Black Hexagon Bolts, Nuts and Lock Nuts (Diameter 6-39 mm) and Black Hexagon Screws "Specification for Hexagon Bolts and Nuts (M-42 to M-150)".

3.5.3 Plain washers shall conform to IS: 2016 "Specification for Plain Washers and spring washers shall conform to IS: 3063 "Spring Washers for Bolts, Nuts & Screws".

3.6 Steel Tubes for Non-structural use

3.6.1 Steel tubes for non-structural use shall conform to IS: 1239 (Part-I) "Specification for Mild Steel Tubes, Tubular and Other Wrought Steel fittings, Part-I: Mild Steel Tubes".

© 2022 MECON Limited All rights reserved

3.6.2 Fittings for steel tubes used for non-structural purposes shall conform to IS: 1239 (Part-II) "Specification for Mild Steel Tubular and Other Wrought Steel Pipe Fittings".

3.7 Threaded Fasteners

Bolts and nuts for fastening shall conform to IS:1367 (Part 1) Technical Supply Conditions for Threaded Fasteners".

3.8 Testing

Test certificates from manufacturer shall be submitted for each consignment. Any additional test which the Engineer may require shall be done according to IS: 1786, 1566, 280, 2062, 1161, 2614, 3063, 1239 (Part 1 and 2) and 1367.

3.9 Cast Steel

3.9.1 Quality

Cast steel shall conform to IS: 1030 "Carbon Steel Casting for General Engineering Purpose". Unless otherwise specified, it shall conform to Grade2.

3.10 Conduits

3.10.1 Steel for electrical wiring

Rigid steel conduits for electrical use shall conform to IS: 9537 (Part 2) for rigid pipes and to IS: 3480 for flexible conduits. Fittings for conduits shall conform to IS: 2667.
All conduit pipes shall be finished with galvanised or stove-enamelled surface. All accessories shall be of threaded type and pipes shall be jointed by means of screwed couplers only. Bend in conduits shall be made to the dimension shown in drawing, but a minimum of 12 times the diameter. Where shown in drawing they shall be treated with anticorrosive preservative as specified.

3.10.2 Non-metallic conduit for electrical wiring

Non-metallic conduits for electrical use shall conform to IS: 9537 (Part 3) for rigid pipes and to IS: 6946 for flexible pipes. Fittings shall conform to IS: 3419.

Bends shall be achieved by bending the pipes by inserting suitable solid or inspection type normal bends, elbows or similar fittings.

© 2022 MECON Limited All rights reserved

4.0 BRICK AND STONES

4.1 Bricks

Bricks for masonry in foundations, walls and other locations shall be common burnt clay building bricks having minimum crushing strength of 5 N/sq.mm., or such other strength as may be described in the Schedule of Items, when tested in accordance with IS: 1077 "Common Burnt Clay Building Bricks". They shall be sound, hard and thoroughly well burnt, with uniform size having rectangular faces with parallel sides and sharp straight right angled edges and be of uniform colour with fine compact uniform texture. Bricks shall be of uniform deep red cherry or copper colour. They shall be free from flaws, cracks and nodules of free lime. Water absorption after 24 hours immersion in cold water shall be not more than 20% by weight. They shall not absorb more than 10% by weight of water after immersion for six hours. They shall emit a clear metallic ringing sound when struck by a mallet and shall not break when dropped on their face, from a height of 60 cm. Fractured surface shall show homogeneous, fine grained uniform texture, free from cracks, air holes, laminations, grits, lumps of lime, efflorescence or any other defect which may impair their strength, durability, appearance and usefulness for the purpose intended. Under burnt or vitrified bricks shall not be used. Samples of bricks brought to the site shall be tested periodically for compression and other tests according to IS: 3495 (Parts-1 to 4) "Method of Test for Burnt Clay Building Bricks". Where the size of bricks is not specifically mentioned, it shall be taken to mean conventional sizes as is commonly available in the area. In case modular bricks are to be used, it shall be accordingly specified in Schedule of Items. The bricks shall be classified on the basis of average compressive strength as given in table 1 of IS: 1077.

4.2 Handling

Bricks shall be unloaded by hand and carefully stacked and all broken bricks shall be removed from the site.

4.3 Samples and Inspection

Representative samples shall be submitted by the contractor and approved samples retained by the Engineer for comparison and future reference. Bricks shall be obtained from approved manufacturer. All bricks shall be subject to inspection on the site and shall be to the approval of the Engineer who may reject such consignment as are considered by him to be inferior to the quality specified. The Contractor shall provide all labour and plant required for the inspection and conduct such test as shall be required by the Engineer without additional charges.

4.4 Brick Bats

© 2022 MECON Limited All rights reserved

Brick bats shall be obtained from well burnt bricks of approved quality.

4.5 Laterite Stone Blocks

These shall conform to IS: 3620 "Laterite Stone Blocks for Masonry". The laterite stone blocks shall have a minimum compressive strength of 30 kg/cm2 and to be tested as per IS: 1121. The blocks shall be minimum 15 cm thick but not exceeding 30 cm. They shall be dressed to the desired sizes and shapes with an axe. Laterite stones shall be well seasoned by exposure to air before dressing and using on work.

4.6 Stone (granite, trap, sandstone, quartzite etc.)

4.6.1 Stone used shall be strong, durable, dense, compact, close grained, homogeneous, fire resistant and shall be obtained from sources approved by Engineer. Stones shall additionally be hard, sound, free from cracks, decay and other flaws or weathering and shall be easily workable. Stones with round surfaces shall not be made use of.

4.6.2 Stones shall have a crushing strength of not less than 200 kg/cm2. Stones with lesser crushing strength may be used in works with prior approval of the Engineer. Stones shall be non-porous and when tested in accordance with IS: 1124 "Method of Test for Determination of Water Absorption Etc.," shall show water absorption of less than 5% of its dry weight when soaked in water for 24 hours. Tests for durability and wheathering shall be done in accordance with IS: 1126 and IS: 1125 respectively. The working of stones to required sizes and their dressing shall be as per IS: 1127 "Recommendations for dimensions and workmanship of natural building stones for masonry work" and IS: 1129 "Dressing of Natural Building Stones". Stones especially limestone and sand stones shall be well seasoned by exposure to air before use in construction works.

4.6.3 Size

Normally stones shall be of size that could be lifted and placed by hand, between 20 to 30 kg per piece. The length of stones shall not exceed 3 times the height and the breadth on base shall not be greater than 3/4 of the thickness of wall or less than 15cm. The height of stone may be upto 30cm.

4.6.4 Dressing

4.6.4.1 Random rubble

Stones shall be hammer dressed on the face, the sides, and the beds to enable it to come into close proximity with the neighbouring stone. The bushings in the face shall not project more than 4cm on all exposed faces and 2cm on a

© 2022 MECON Limited All rights reserved

face to be plastered, nor shall it have depressions more than 1cm from the average wall surface.

4.6.4.2 Coursed rubble - First sort

Face stones shall be hammer dressed on all beds, and joints, so as to give them approximately rectangular block shape. These shall be squared on all joints and beds. The bed joint shall be rough chisel dressed for atleast 5cm back from the face, and side joints for atleast 4cm such that no portion of the dressed surface is more than 6mm from a straight edge placed on it. The bushing on the face shall not project more than 4cm as an exposed face and one cm on a face to be plastered. The hammer dressed stone shall also have a rough tooling for a minimum width of 2.5cm along the four edges of the face of the stone, when stone work is exposed.

4.6.4.3 Coursed rubble - Second sort

Dressing shall be as specified in 5.6.4.2 except that no portion of dressed surface shall exceed 10mm from a straight edge placed on it as against 6mm for first sort.

4.6.4.4 Stone for veneering

Stone lining upto 8cm shall be treated as veneering work. The stone shall be cut into slabs or required thickness along the planes parallel to the natural bed. Every stone shall be cut to the required size and shape so as to be free from any waviness and to give truly vertical and horizontal joints. Adjoining faces shall be fine chisel dressed to a depth of a 6mm, so that when checked with a 60cm straight edge, no point varies from it by more than 1mm. All edges shall be chisel dressed to be true, square and free from chippings. Top and bottom faces shall be dressed to within 3mm tolerance and vertical faces to within 6mm tolerance, when checked with a 60mm straight edge. Dressing at the back shall not be done.

4.7 Hollow and Solid Concrete Blocks

4.7.1 Cement concrete blocks used in the construction of concrete masonry load bearing as well as non-load bearing walls shall conform to the requirements of IS: 2185 (Part 1). Physical properties such as density, compressive strength, water absorption etc., shall be determined in accordance with the procedure laid down in IS: 2185 (Part 1) and shall conform to the requirement laid therein. When inspected visually all blocks shall be sound, free from cracks, broken edges, honeycombing and other defects which would interfere with the proper placing of blocks or impair strength or permanence of construction.

4.7.2 Dimensions and tolerance

© 2022 MECON Limited All rights reserved

The blocks shall be made in sizes and shapes to suit the particular job and shall include stretcher, corner, double corner or pier, jamb, header, bullnose and floor units.

4.7.2.1 The nominal dimensions of concrete block shall be as follows:

Length	:	400, 500 or 600mm
Height	:	200 or 100mm
Width	:	50, 75,100, 150, 200, 250 or 300mm

In addition, blocks shall be manufactured in half and other suitable lengths and shapes to suit Architectural requirements.

4.7.2.2 The maximum dimensional tolerances shall be plus or minus 5mm in length and plus or minus 3mm in height and width.

4.7.3 Hollow blocks (open and closed cavity)

4.7.3.1 The blocks having solid material about 50% to 75% of total volume of the block calculated from the overall dimensions shall be termed as hollow blocks. Grade-A blocks used as load bearing units shall have a minimum block density of 1500 kg/m3 and shall have minimum average compressive strength of 3.5, 4.5, 5.5 or 7.0 N/mm2 at 28 days as specified.

4.7.3.2 Grade-B Blocks used as load bearing units shall have block density less than 1500 kg/m3, but not less than 1000 kg/m3 and shall have compressive strength of 2.0, 3.0, or 5.0 N/ mm2 or as specified.

4.7.3.3 Grade-C blocks used as non load bearing units shall have block density less than 1500 kg/m3, but not less than 1000 kg/m3 and compressive strength of 1.5 N/mm2 at 28 days.

4.7.4 Solid blocks

The blocks having solid material more than 75% of the total volume of the be block shall be termed as solid block. Solid blocks (Grade-D) used as load bearing units shall have a block density of not less than 1800 kg/m3 and compressive strength of 4.0 or 5.0 N/mm2 as specified.

4.7.5 Mix proportion

The concrete mix used for blocks shall not be richer than one part by volume of cement to six parts by volume of combined aggregates before mixing.

4.7.6 Surface texture and finish

© 2022 MECON Limited All rights reserved

Surface texture, that is, very fine closed texture or coarse open texture and finish, whether coloured or not shall be according to the drawing, description in the Schedule of Items or instructions of the Engineer.

4.7.7 Marking and certificate

The blocks shall be marked permanently indicating the Grade of the unit, identification of the manufacturer and the year of manufacture. Manufacturers test certificate shall be supplied with the delivery of each lot.

4.8 Fly Ash Bricks

In addition to common burnt clay building bricks, Fly ash bricks for masonry shall be used wherever required as per direction of Engineer. Fly ash brick shall be of minimum class designation 5 and shall conform to requirement of IS:12894. Brick shall be sound, compact and uniform in shape with smooth rectangular faces and sharp corners. Average wet compressive strength of brick shall not be less than 5 N/ sq. mm. (or such other strength as may be described in the Schedule of Items) when tested as described in IS:3495.

4.9 Cement, Lime and Water

Cement, lime and water shall conform to the specification under the Section Concrete of this part.

4.10 Sand for Masonry Mortar

Sand for masonry mortars shall be natural sand, crushed stone sand or crushed gravel and shall comply with IS: 2116 "Sand for Masonry Mortars". The sand shall be hard, durable, clean and free from adherent coatings and shall not contain amount of clay, silt and fine dust more than 5% by wt. Sand shall not contain any harmful impurities such as iron pyrites, alkalies, salts, coal, mica and organic matters. The particle size grading of sand for use in mortars shall be within the limits as specified in Table I of above code.

5.0 SAND FOR PLASTERING

Sand for use in mortars for internal wall, ceiling and external plastering and rendering shall conform to IS:1542. It shall not contain any harmful impurities such as iron pyrites, alkalis, salts, coal, mica and organic matters. Percentage of salt and dust shall not be more than 5% by weight. Grading of sand shall be within the limits specified in clause no. 5.1 of above code. Fineness modulus of naturally occuring sand shall not be less than 1.5.

© 2022 MECON Limited All rights reserved

6.0 MATERIALS FOR FLOORING & PAVING

6.1 Cement and Binders

6.1.1 Cement

Cement, fine aggregates, reinforcement and water used shall comply with the requirements of concrete as per clauses 2.6, 2.3, 3.1 and 2.7 of this part.

6.1.2 Water

Water for construction shall be clean, soft, free from loam, salt and organic materials. Hard water shall not be used.

6.2 Aggregates

6.2.1 Coarse Aggregate

6.2.1.1 Coarse aggregate shall conform to the requirement as per clauses 2.1 and 2.2 of this part.

6.2.1.2 For granolithic floor the screeded bed shall comprise of aggregates size 15mm and down graded and topping shall comprise of clean fine stone chippings, size 4mm and down. For concrete floor with hardener treatment the topping shall comprise of stone chippings, size 6mm and down and for in-situ terrazzo flooring, chippings shall be within sizes 12mm to 6mm graded. The marble chips for topping of terrazzo floor shall be of 3-6mm size and shall conform to Grade-I of IS: 2114 "CP for laying in-situ terrazo floor finish".

6.2.2 Common burnt clay bricks

Common burnt clay bricks shall conform to IS: 1077 and comply with requirements under the section "Brick and Stones" of this part.

6.2.3 Rubble

Rubble of approved quality shall be used and shall be clean and free from dirt. The loose and weathered sections shall be removed before use. Rubble used as hard core shall have a least lateral dimension (thickness) between 100mm and 225mm, depending on the thickness of hardcore.

© 2022 MECON Limited All rights reserved

7.0 METAL DOORS, WINDOWS, VENTILATORS AND ROLLING SHUTTERS

7.1 General

Materials used in the fabrication of doors, windows, and ventilators shall be the best procurable and conforming to relevant Indian Standards.

7.2 Steel Doors, Windows and Ventilators

Steel sections used for fabrication of doors, windows and ventilators shall be standard rolled steel sections specified in IS: 1038, IS: 1977, IS: 1361 or IS: 7452 respectively as appropriate or as specified in drawing and Schedule of Items. Rivets shall conform to IS: 1148.

7.3 Steel Rolling Shutters, Rolling Grills

These shall conform to IS: 6248.

7.4 M.S. Bolts etc.

M.S. bolts, nuts, screws, washers, peg stays and other mild steel fittings shall be treated for corrosion. Putty for glazing shall conform to IS: 419. Glass panes and glazing shall conform to the specification detailed under this series.

7.5 Hardwares

Hardware and fixtures shall be as specified in the drawings or Schedule of Items. All hardware and fixtures shall be able to withstand repeated use. Door closers shall be suitable for doors weighing 61 80 kg, unless otherwise stated. Each closer shall be guaranteed against manufacturing defect for one year and any defect found within this period shall be rectified or the closer replaced free of charge. Concealed door closers shall be either floor mounted or transom mounted, suitable for installation with metal doors. It shall conform to the performance requirements and endurance test stated in IS: 3564 Appendix-A.

7.6 Mastic

The mastic for caulking shall be of best quality from a manufacturer approved by the Engineer. In general, the mastic for fixing of metal frames shall conform to IS: 1081 and/or as approved by the Engineer.

© 2022 MECON Limited All rights reserved

8.0 WATER PROOFING MATERIALS

8.1 Integral Cement Waterproofing Compounds

Integral cement waterproofing compounds, i.e. admixture for waterproofing purposes shall fully comply with the requirements of IS: 2645. Properties like permeability, setting time, compressive strength shall be in accordance with the requirements of this code when tested as per procedure laid therein. Calcium chloride content of the product used shall be made known to Engineer before use.

8.2 Bitumen

The bitumen bonding material for waterproofing shall conform to the requirements laid down in IS: 702 or IS: 93 or IS: 217 or IS: 454 depending upon whether industrial bitumen, paving bitumen or cutback bitumen is used. For selecting the particular type and grade of bitumen to be used the relevant item in Schedule of Items shall be referred to.

8.3 Bitumen Primer

Bitumen primer used for application to concrete and masonry surfaces and bitumen for the purpose of waterproofing shall conform to requirements given in IS: 3384 and pass tests in accordance with the procedure laid down in appropriate IS mentioned in Table-I of IS: 3384. Bitumen primer should be free from water and shall preferably ;be made from the same grade of bitumen as used in bonding.

8.4 Bitumen Felt

Bitumen felts used for water proofing purposes shall be as specified in IS: 1322. Physical properties shall conform to the requirements and tests shall be carried out as per procedure laid down in IS:1322. Base, (whether fibre or Hessian), type and grade of felt shall be as mentioned in the relevant items under Schedule of Items. Unless otherwise stated, hessian base felt Type-3, Grade-2 shall be used.

8.5 Bitumen Mastic

Bitumen mastic used for water proofing of roofs shall have the physical properties as mentioned in IS: 3037 when tested with the procedure laid down in appropriate IS mentioned in IS: 3037.

8.6 Bituminous Compounds

Bituminous compounds when used for waterproofing of porous masonry, concrete floors, walls and roofs shall conform to the requirements of IS:

© 2022 MECON Limited All rights reserved

1580. Physical properties shall be governed by the requirements of this code when tested in accordance with the procedure laid therein.

8.7 Surface Application Materials

Waterproofing material for application on mortar or concrete surface shall conform to IS: 9862. The primer shall be suitable for spray or brush application. It shall have properties enabling it to penetrate through pores or cracks and fill them up, making the surface impervious.

8.8 Polymer based paints

The materials used shall be high polymer based chloride and sulphide free cement and waterproofing additions and epoxy based waterproofing paints as per manufacturer's specification and approved by Engineer.

8.9 Fibre glass R. P. Tissue

The fibre glass R.P. tissue is a thin flexible uniform mat, composed of glass fibre in an open porous structure bonded with a suitable inert material compatible with coal tar, asphaltic enamel and oil plastic based wall paint. The fibrous glass mat is reinforced with continuous filament glass yard at 3/8" (10mm) pitch in the longitudinal direction.

PHYSICAL PROPERTIES

i)	Weight	The average weight of fibre glass R.P. tissue shall not be less than 50 gms/sq.sm.
ii)	Thickness	The fibre glass R.P. tissue shall have a thickness not less than 0.4mm.
iii)	Tear Strength	The tear strength shall be not less than 900 grams in the transverse direction.
iv)	Breaking Strength	This shall have a minimum breaking strength of 13 lb/in (2.32kg/cm) in the longitudinal direction.
v)	Porosity	This shall have a porosity when related to pressure difference across the sample of not less than 0.022" (0.56mm) and not more than 0.76" (1.92mm) of water guage at an air velocity of 200fpm.(100cm/sec.).

© 2022 MECON Limited All rights reserved

vi)	Pliability	There shall be no cracking of the tissue mat when bent over a 1/8" (3.2mm) radius after immersing for 10-15min. through a 90 degree arc.
vii)	Temperature	The fibre glass tissue shall be Resistance under a load of hot bitumen at 530 degree F (276 degree C) for one minute.

8.9.1 Primer

Primer shall conform to requirements laid down in IS: 3384. It is to be prepared by blending turpentine and blown grade bitumen in the ratio of 60:40 by weight.

8.9.2 Blown Materials

Blown grade bitumen shall be conforming to IS: 702 and residual grade bitumen conforming to IS:73 respectively. This shall be prepared by heating to correct working temperature.

8.9.3 Surface finish

Pea sized gravel/grit 6mm and down.

8.10 P.V.C. Membrane/Sheets

Polyvinyl chloride sheets for the purpose of water proofing and other underground use are specially developed sheets made from the compounded resin of grade MP/DP/CR-02 and shall be resistant to the passage of gross water and water vapour. It shall be corrosion resistant and resistant to a wide range of acidic and alkali reagents, saltpetre action, salt water and ultra violet rays etc. PVC sheets manufactured by approved and reputed firms like Maxlok Polymer Ltd. shall only be used

The sheets shall consist of Knobs or Lugs jutting out of the sheets in a grid fashion so as to provide a perfect grip in the mortar and concrete. Sheet thickness, spacing of the knobs and their projection from the sheet shall be as specified in the item. The sheets shall be of maximum practicable length and width unless otherwise specified.

The adhesive used for jointing shall be of approved quality and of grade C-02.

The sample of the material shall be got approved before use.

© 2022 MECON Limited All rights reserved

8.10.1 Properties

i)	Chemical Composition	:	Resin Plasticiser Inhibitor Stabiliser UV Barrier.
ii)	Thickness	:	Not less than 0.25 mm
iii)	Rupture/Tensile Strength	:	Not less than 225Kg/cm2
iv)	Adhesive bond Strength [width]	:	: Not less than 7.1 Kg/cm
v)	Elongation at Break	:	130%

9.0 WATER BAR

9.1 General

Water bar for use in construction/expansion joints in concrete and reinforced concrete structures shall be of copper sheet, galvanised steel sheet, rubber or PVC as shown in drawing or described in the Schedule of Items. It shall be subject to approval of Engineer.

9.2 Jointing

The water bar shall have dimensions as shown in drawing. Where water bars are required to be lengthened or otherwise jointed the joining shall be done in such a way as to achieve a perfectly watertight joint.

10.0 LEAD

10.1 General

Lead for joints in cast iron spigot and socket pipes shall be melted from pure soft pig lead conforming to Type-I of IS: 782. "Caulking Lead". Where lead wool is allowed for caulking, it shall be equal to or better than Type-II of IS: 782. Lead flashing shall conform to IS: 405 Part I&II.

11.0 BUILDING PAPER

11.1 Building paper shall be bitumen impregnated paper conforming to IS: 5134, or such other as may be approved by the Engineer.

12.0 FILLING MATERIAL

© 2022 MECON Limited All rights reserved

12.1 General

Filling material shall conform to what is shown in drawing, described in the Schedule of Items or otherwise directed by the Engineer. Earth or sand for filling under floors shall correspond to those described elsewhere in these specifications.

12.2 Mastic Bitumen

Mastic Bitumen shall conform to IS: 3037 or IS: 5871 as appropriate.

12.3 Flexible Boards

Flexible boards for use in expansion joints shall correspond to the description given in drawing or the Schedule of Items or the instruction of Engineer.

13.0 DRAINAGE & SANITATION (EXTERNAL)

13.1 General

All materials, pipes, specials, fittings, fixtures etc., to be used in the works shall be of best quality and class specified in relevant IS Code. Where specified these shall be of specific manufacture and quality and shall be procured from manufacturer or their accredited stockists and be marked with manufacturers' names and trade mark. Contractor shall submit to the Engineer samples of all materials, pipes, specials, fittings fixtures for approval before use in the works. Such approved samples shall be retained by the Engineer till completion of works. Pipes and Specials may be any or combination of following types:-

i) PVC Pipes

ii) Stone Ware Pipes

iii) Sand Cast Iron Pipes for soil waste & Ventilation

iv) CI Pipes for rain water

v) AC Pipes for rain water

vi) R.C.C Pipes

13.1.1 High density PVC pipes and fittings

This shall conform to IS: 4984 and IS: 8008 (Part 1 to 7) unless otherwise specified.

© 2022 MECON Limited All rights reserved

13.2 PVC Waste Pipe

This shall conform to IS: 4985 unless otherwise specified.

13.3 Stoneware Pipes & Fittings

All stoneware pipes, bends, gully traps and sewer traps shall be of the best salt glazed variety inside and outside, hard burnt dark grey colour, perfectly sound, free from fire cracks and imperfection of glaze, truly circular in cross section, perfectly straight, of standard nominal length and depth of socket and barrel. These shall be of approved manufacture and shall comply with the requirement of IS: 651. These pipes shall be of grade AA unless otherwise specified.

13.4 Sand Cast Iron Pipes & Fittings

All soil waste and vent pipes and fittings used in the work shall be cast iron and shall conform to IS: 1729. The pipes shall have spigot and socket ends, with bead on spigot end and shall be with or without ears. The pipes shall be free from cracks and other flaws. The interior of the pipe and fittings shall be clean, smooth painted inside and outside with DR Angas smiths solution or other approved anti-corrosive paint.

The standard weights and thickness of pipe shall comply with the requirements of IS: 1729. The tolerance on wall thickness and weight shall be minus 15 percent and minus 10 percent respectively. Pipes weighing more than the nominal weight given below may be accepted provided they comply in every other respect.

Nominal size	**Weight per piece in Kg. excluding ears** **Overall length**		
	1500 mm	**1800 mm**	**2000 mm**
50	9.56	11.41	12.65
75	13.83	16.52	18.37
100	18.14	21.67	24.15
150	26.70	31.92	35.66

Specials and Fittings shall include bends, offsets, branches of various types, junctions etc., as required for the work which shall be provided according to drawings and directions of the Engineer. B.M. trap shall have water seal as per I.S. provisions.

© 2022 MECON Limited All rights reserved

The specials and fittings shall be provided with access doors where so specified or directed by the Engineer. The access door fittings shall be of proper design so as not to form cavities in which the filth may accumulate. Doors shall be provided with 3 mm thick rubber insertion packing, and when closed and bolted they shall be water tight. The access doors shall have MS studs and bolts or screws or bolts and nuts.

13.5 Cast Iron Pipes & A.C. pipes: Rainwater pipe

13.5.1 Pipes shall be of approved manufacture, true, smooth and cylindrical, their inner and outer surfaces being as nearly as practicable concentric and shall conform to IS:1230. These shall be sound and uniform casting, free from laps, pin holes or other imperfections and shall be neatly finished inside and outside. The ends of pipes shall be reasonably square to their axis.

13.5.2 Dimensions

CI rain water pipes shall be of the dia specified in the description of the item and shall be in full lengths of 1.8 metres including socket ends of the pipes, unless shorter lengths are required at junctions with fittings. The pipe lengths shall in each case be with sockets. The pipes shall be supplied without ears unless otherwise specifically mentioned.

The pipes supplied shall be factory painted with a tar based composition both inside and outside which shall be smooth and tenacious unless specified otherwise.

Every pipe shall ring clearly when struck all over with a light hand hammer. When shorter pipes are cut from full lengths they shall be cut with a hacksaw.

Where the pipes are to be embedded in masonry they shall be of Class of pipes as are used for soil and vent pipes. For the weights of different sizes of these pipes, the specifications under SCI and vent pipes may be referred to.

13.5.3 A.C. pipes and fittings the pipes and fittings shall be of approved manufacture and shall conform to IS:1626. These shall be homogeneous and free from cracks and other defects. The pipes shall be straight, smooth and regular in thickness.

The diameter of the pipe shall be as specified. The fittings like heads, bends of different degrees, offsets of different projections, shoes and junctions shall be of the type, diameter and size as required for the work. The pipes shall be used in full lengths as far as possible.

© 2022 MECON Limited All rights reserved

13.6 Gully Trap

Each gully trap shall have one C.I. grating 150 mm x 150 mm and one water tight pre-cast R.C. cover 300 x 300 x 40 mm thick with 1:1 1/2:3 mix concrete (one cement: one and half sand: 3 stone chips 20 mm down) including neat cement finish.

13.7 CI Manhole Covers & Frames

These shall be of light or medium duty (LD or MD) as specified in Schedule of Items and of cast iron with raised chequered design, lifting key and key hole and shall be coated with black bituminous base material,. Light duty covers and frames shall be of either rectangular type, single seal, pattern 1 and 2 having minimum weight of cover and frame 38 Kg and 25 Kg. respectively or with double seal, minimum weight of cover and frame being 52 Kg. These may be of square type also. Single seal with clear openings of 455 and 610 mm with minimum weight of cover and frame being 20 Kg and 38 Kg respectively, double seal of same openings shall have minimum Wt. of cover and frame 30 Kg and 55 Kg respectively. Medium duty covers and frames shall be either of circular type with 500 and 560 mm clear openings and minimum Wt. of cover and frame 116 Kg and 128 Kg respectively or of rectangular type with minimum Wt. of cover and frame 144 Kg.

The C.I. manhole covers and frames shall conform to IS: 1726.

14.0 EXTERNAL SEWERAGE & DRAINAGE

Unless otherwise specified CI pipe and specials, caulking lead, SW pipe, RCC pipe shall conform to the following.

14.1 C.I. Pipes

i) C.I. pipe shall conform to IS: 1536 or/and IS: 1537 of class as specified in Schedule of Items.

ii) C.I. pipe fittings shall conform to IS: 1538 (Part 1 to 23) as specified in Schedule of Items.

iii) Bolts and nuts shall be hexagonal bolts and nuts conforming to IS: 1363 (Part 1 to 3).

© 2022 MECON Limited All rights reserved

14.2 Washers

Spring washers conforming to IS: 3063 shall be used near the pumps to take care of vibration. In other places plain washers conforming to IS: 2016 shall be used.

14.3 Gaskets

Gaskets shall be reinforced rubber sheet or compressed fibre board conforming to IS: 638 of thickness between 1.5mm to 3mm or as specified.

14.4 Caulking Lead

Lead for the spigot and socket joints shall conform to IS: 782.

14.5 Salt Glazed Stone Ware Pipes

Salt glazed stone-ware pipes used shall conform to IS: 651 and shall be laid as per IS: 4127. The pipes shall be of grade AA unless otherwise specified.

14.6 Steel Pipes

Steel pipes and fittings used for encasing shall conform to IS: 1239 (Part 1&2) medium Class upto 150 mm dia and as per IS: 3589 for pipes of dia 200 mm and above. For pies of dia 200 mm and above fittings, if required shall be fabricated from pipes itself.

14.7 Cast Iron Manhole Covers & Frames

These shall be of medium or heavy duty (M.D. or H.D.) as specified in Schedule of Item and of Cast Iron with raised chequered design, lifting key and key hole and shall be coated with black bituminous base material. Medium duty covers and frames shall be either of circular type with 500 mm clear opening and minimum weight of cover and frame 116 Kg and 128 Kg respectively or of rectangular type with minimum weight of cover and frame 144 Kg.
Heavy duty covers and frames shall be either of circular type with clear openings of 500 and 560 mm and 170 and 208 Kg weight respectively or of double triangular type with clear openings of 500 and 560 mm and 229 and 255 Kg weight respectively.

The CI manhole cover and frames shall conform to IS: 1726.

15.0 ROAD

© 2022 MECON Limited All rights reserved

15.1 General

Roads shall be understood to include road bed, the wearing surface, berms, foot-paths, kerbs, culverts and bridges.

15.2 Soling Stones

Material for soling shall be natural stone boulders or crushed blast furnace slab. Stones for soling shall be of height equal to thickness of the soling with tolerance of plus or minus 25mm and shall not have a base area of less than 250 sq.cm. nor more than 500 sq.cm. and the smallest dimension of any stone shall not be less than half the largest dimension. Stones shall be tough, angular, durable and generally free from flat, elongated, soft and disintegrated particles. They shall also be free from dirt or other objectionable matter and be obtained from quarries approved by the Engineer.

Crushed slag obtained from air-cooled blast furnaces slag shall be angular, of reasonably uniform quality and density and generally be free from any thin, elongated, and soft pieces, dirt or other objection able matter. The density of slag should not be less than 1.12 gm/cc and glassy material shall not exceed 20%. Water absorption when determined in accordance with IS: 2386 (Part-III). "Methods of Tests for Aggregates for Concrete: Specific Gravity, Density Voids, Absorption and Bulking", shall not exceed 10%.

15.3 Aggregates for Granular Sub Base

Material to be used for the work shall be natural sand, crushed gravel, crushed stone, crushed slag or combination thereof depending upon the grading requirement. The material shall be free from organic or other deleterious constituents and shall conform to gradings given in Table 400-1 and physical requirements in Table 400-2 of MORT&H Specification.

15.4 Coarse Aggregate for Water Bound Macadam

Coarse aggregate for water bound macadam shall be natural gravel, crushed stone obtained from approved quarries or crushed blast furnace slag. Crushed stone shall be hard, durable, tough and of uniform quality, generally free from flat, elongated, soft and disintegrated particles. It shall have sharp edges and also not have excess of dirt and other objectionable matter. When tested as per IS: 2386 (Part-IV) for Los Angeles Abrasion Value or Aggregate Impact Value, the limiting values shall be 50% and 40% respectively for base course and 40% and 30% respectively for surfacing course. The flakiness index shall not exceed 15% when tested in accordance with IS: 2386 (Part-I) "Methods of Test for Aggregates for Concrete: Particle size and Shape". Crushed slag aggregates shall meet the requirements given for soling stones from blast furnace slag.

© 2022 MECON Limited All rights reserved

Size and grading requirements of coarse aggregates shall be as specified in Table 400-9 of MORT&H Specification.

15.5 Coarse Aggregates for Wet Mix Macadam

The coarse aggregate shall conform to physical requirement as per table 400-12 and grading requirement shall conform to table 400-13 of MORT&H specification

15.6 Screenings

Screenings used for filling voids in coarse aggregates for water bound macadam shall generally be of the same material as the coarse aggregate. Non-plastic materials such as Kankar nodules, moorum or gravel (other than river bore rounded aggregates) may be used, provided that the liquid limit and plasticity index are below 20 and 6 respectively. The fraction passing 75 microns sieve shall not exceed 10%. Size and grading of screenings shall be as specified in Table 400-10 of MORT&H Specification.

15.7 Stone Chips for Bituminous Surfacing

Coarse aggregate shall consist of crushed stone, crushed slag or crushed gravel (Shingle) retained on 2.36 mm sieve. The aggregates shall be clean, strong, durable and fairly cubical, free from disintegrated pieces, organic and other objectionable matter. The aggregates shall preferably by hydrophobic and of low porosity. The mechanical properties and grading for bituminous macadam, dense bituminous macadam, bituminous concrete etc. shall be in accordance with MORT&H specification.

15.8 Sand

Sand for use as fine aggregate in bituminous surfacing shall consist of crushed screenings, natural sand or a mixture of both, passing a 2.36mm sieve and retained on 75 micron sieve. It shall be clean, hard, durable, uncoated and dry, free from injurious, soft or flaky pieces and organic deleterious substances.

15.9 Binder

Binding material for water bound macadam shall consist of fine grained material such as stone dust, kankar modules or moorum. The plasticity index shall be between 4 to 9 when water bound macadam is to be used as surface course and upto 6 when used as sub/base or base course.

© 2022 MECON Limited All rights reserved

15.9.1 Paving Bitumen

It shall conform to IS: 73 and shall be of the specified type and grade. The material shall be homogeneous and shall not foam when heated to 175 degree C. Various properties like specific gravity, flash point, softening point, penetration etc. shall be as given in the above code.

15.9.2 Bitumen Cut Back

Bitumen cut-back shall conform to specification given in IS: 217. It shall be of three types, Rapid Curing (RC), Medium Curing (MC) and Slow Curing (SC). These shall comply with the requirements specified in Table - 1, 2 and 3 respectively of the above code.

The above three types of cutback bitumens shall be classified into different grades on the basis of Kinematic viscosity. Rapid curing type shall be used with aggregates containing practically no fine aggregates passing through 2.36 mm sieve. Medium curing bitumen shall be used with aggregates containing less than 20 per cent of fine aggregates passing through 2.36 mm sieve. Slow curing type shall be used with aggregates containing more than 20 per cent of fine aggregate passing through 2.36 mm sieve.

Medium curing bitumen of 30 grae i.e. MC 30 shall be used as primer. Manufacturer shall indicate source and type of the bitumen.

15.10 Kerbs

Kerbs may be of stone, concrete or brick as may be shown in drawing or otherwise directed by Engineer.

15.10.1 Stone kerbs

Stones shall conform to the dimensions and shapes given in drawing.

Exposed faces shall be dressed to lines.

15.10.2 Concrete kerbs

Shape and dimension shall conform to the drawing. They shall be pre-cast and the road side top corner shall be given a chamfer.

15.11 Galvanized Steel Barbed Wire for Fencing

These shall be of two types A&B. In both types Barbs shall have 4 points formed by twisting two point wires, each two turns. In type A (Iowa type) twisting is done around both line wings and in type B (Glidden type) around one line wire, in both cases making altogether four complete turns. It shall

© 2022 MECON Limited All rights reserved

conform to IS: 278 and shall have the diameter of line and point wire as described in schedule of item. Galvanized mild steel wire shall conform to IS: 280.

Line and point wire shall be circular in section, free from scales and shall be uniformly galvanized. Line wire shall be in continuous length and shall not contain any welds other than those in rod before it is drawn.

15.12 Galvanized Steel Chain Link Fabric

It will conform to IS: 2721. It shall be of width, mesh and wire dia as per description of Item. For chain link fabric having width upto 2.00 M, of all mesh sizes, two line wires shall be provided. Whereas for width of 2.40 M and mesh size exceeding 50mm three line wires shall be provided. These shall be provided at top and bottom of the fabric, but wherever three line wires have been specified, these shall be provided at top, bottom and middle of fabric.

The mesh wire and line wire of the fabric shall be manufactured from Galvanised steel conforming to IS: 280. It will have zinc coating of type medium as given in IS: 4826. " Specification for Hot dipped galvanized coatings on round steel wires". Unless otherwise mentioned in the description of item fabric with both ends twisted shall be used.

The galvanised steel pipe posts shall consists of 80 mm and 50 mm nominal diameter. The pipe posts shall conform to IS: 1161 and shall be of medium grade and galvanised.

16.0 MATERIALS NOT SPECIFIED

Any materials not fully specified in these specification and which may be offered for use in the works shall be subject to approval of Engineer, without which it shall not be used anywhere in the construction works.

© 2022 MECON Limited All rights reserved

SPECIFICATION FOR ARCHITECTURAL WORKS
PART – IB

CONTENTS

1.0 FLOORING

1.1 Terrazo Tiles / Cast-in-Situ
1.2 Ceramic / Vitrified Tiles
1.3 Acid / Alkali Resisting Tiles
1.4 PVC Floor Finish
1.5 Finish for Stair Cases
1.6 Cement concrete floor
1.7 Stone floor
1.8 Miscellaneous
1.9 Wooden floor

2.0 SKIRTING /DADO

3.0 PLASTERING

3.1 Scope
3.2 Applicable codes & specifications
3.3 Cement plaster with cement finish
3.4 Water proof cement plaster
3.5 Sand faced cement plaster
3.6 Grooves in sand faced plaster
3.7 Mode of measurement
3.8 Rough cast plaster

4.0 SPECIFICATIONS FOR PAINTING

4.1 Scope of work
4.2 Materials
4.3 Commencing work
4.4 Preparation of surface
4.5 Application

© 2022 MECON Limited All rights reserved

4.6 Brushes and containers
4.7 Measurement
4.8 Explanatory notes on the table of co-efficients
4.9 Precautions
4.10 Rates
4.11 Painting priming coat on wood, iron or plastered surfaces
4.12 Painting with superior quality & flat oil ready mixed paints on new surface
4.13 Painting with synthetic enamel/semi glossy paint on new work
4.14 Painting with acrylic emulsion/plastic emulsion paint
4.15 Dry distempering
4.16 Oil emulsion (oil bound) distempering
4.17 Water proof cement based paint
4.18 Exterior emulsion painting
4.19 Bees waxing or polishing with ready made wax polish: (new work)
4.20 French spirit polishing: (on new work with a coat of wood filler)
4.21 Resin based thermo plastic paint (decorative and protective finish)
4.22 Consumption of paint for different painting items
4.23 Coverage per sqm achieved per litre paint

5.0 SPECIFICATION FOR FALSE CEILING

5.1 Scope of work
5.2 General
5.3 Codes and standards
5.4 Seamless suspended ceiling
5.5 Suspended precoated gi grid system
5.6 Metal false ceiling system & thermal insulation metal false ceiling system

6.0 VOID

7.0 DOOR. WINDOWS & PARTITION

7.1 Partition
7.2 Modular glass partition
7.3 Acoustical panelling
7.4 Doors & windows

© 2022 MECON Limited All rights reserved

7.5 Fittings

7.6 Hinges

7.7 Pressed steel door frame

7.8 PVC door frame

8.0 TIMBER WORK

8.1 General

8.2 Teak wood/Sal / Bija Sal / Deodar / Kail and other varieties of timber

8.3 Storage and Inspection

8.4 Moisture Content

8.5 Tolerances for Timber

8.6 Wood Particles Boards

8.7 Veneered Particle Board

8.8 Plywood for General Purpose

8.9 Veneered decorative plywood

8.10 Flush door shutters, shelves

8.11 Timber doors

8.12 Glazing

8.13 Fittings for doors, windows, etc.

9.0 SANITARY, PLUMBING INCLUDING RAINWATER FITTINGS, FIXTURES, WASTE NETWORK

9.1.1 General instructions:

9.1.2 List of indian standards

9.1.3 Minimum weight of most commonly used sanitary appliances & water fitings

9.1.4 Mandatory tests / optional tests

9.1.5 System test

9.2.1 Indian water closet

9.2.2 European or Anglo India water closet

9.2.3 Wash basin

9.2.4 Urinal

9.2.5 Urinal souatting plate

9.2.6 Marble / granite partition

9.2.7 Division plate / partition plate

© 2022 MECON Limited All rights reserved

9.2.8 Half round channel

9.2.9 Glazed floor trap with dome shaped grating

9.2.10 Toilet paper roll holder

9.2.11 PVC water inlet connection

9.2.12 Glazed fire-clay/ vitreous china sink

9.2.13 Stainless steel sink

9.2.14 Sink drain board

9.2.15 Soap dish

9.2.16 Glass mirror

9.2.17 Glass shelf

9.2.18 Liquid soap dispenser

9.2.19 Towel rod /towel ring

9.2.20 Shower rose

9.2.21 Bib tap, stop cock & angle stopcocks

9.2.22 Combination tap assembly (wall/ pillar mounted)

9.2.23 Pillar tap

9.2.24 Flush valve

9.2.25 Waste coupling

9.2.26 Bottle trap

9.2.27 Coat and hat hook:

9.2.28 Flushing cistern

9.2.29 Bracket

9.3 Insulation

9.4 Water supply system

9.4.1 G.I. piping work (exposed)

9.4.2 G.I. piping work (concealed)

9.4.3 Under ground G.I. piping work

9.4.4 High density polyethylene piping work for water supply

9.4.5 UPVC piping work for water supply

9.4.6 CPVC pipes and fittings

9.4.7 Gun metal/ brass full way valve

9.4.8 Pressure reducing valve

9.4.9 C.I. sluice valve chamber

© 2022 MECON Limited All rights reserved

9.4.10 Flanges & flanged joint: (screwed or welded flanges)

9.4.11 Flexible push-on joint (tyton/ ring joint)

9.4.12 Air valve

9.4.13 Butter fly valve

9.5 Drainage system

9.5.1 Cast iron soil quality piping work

9.5.2 UPVC- swr piping work

9.5.3 High density polyethylene piping work for drainage

9.5.4 UPVC piping work

9.5.5 Gully trap

9.5.6 C.I. nahani floor trap

9.5.7 Rain water grating

9.5.8 Cast iron hubless pipes & fittings

9.6 Water tank

9.6.1 Over flow coupling

9.6.2 Ball valve

9.6.3 Rungs

9.6.4 Polyethylene water tank

10.0 MISSCELLANEOUS ITEMS

10.1 Stone cladding

10.2 ACP cladding

10.3 High pressure laminate(exterior grade) cladding

10.4 Structural glazing

10.5 Dry wal partition

10.6 Stainless steel railing

11.0 LANDSCAPE

11.1 Soft landscape

11.2 Hard landscape

12.0 GENERAL FINISHING

PART - IB - MATERIALS

(Architectural Works)

GENERAL

© 2022 MECON Limited All rights reserved

Scope

This part deals with the requirements of materials for use in construction work with regard to quality, testing, approval and storage, before they are used on work.

Standard

A high standard of quality is required for all materials used in construction work. They shall be the best of the kind obtainable indigenously in each case and shall be procured from manufacturers of repute in order to ensure uniformity of quality and assurance of timely supply.

Approval and Tests

i. All materials to be used in construction shall be subject to approval of the Engineer. The Contractor shall apply sufficiently in advance with samples of the materials including the supporting test results frorn the approved laboratory and other documentary evidence from the manufacturer wherever applicable and indicating the types of materials and their respective sources. The delivery of materials at site shall commence only after the approval of the quality, grading and sources of the materials by the Engineer.

ii. The quality of all materials once approved shall be maintained throughout the period of construction and periodical tests shall be carried out to ensure that it is maintained. Such routine tests shall be listed under the different materials andlor as may be ordered by the Engineer from time to time.

iii. Where a particular “Brand” or “Make” of material is specified in the Schedule of Items or Technical Specifications, such “Brand” or “Make” of material alone shall be used on the work. Should it become necessary for any reason (such as non-availability/ceased to be produced), to use any material other than the specified “Brand” or “Make”, the Contractor shall submit sample of the same to the Engineer for approval together with test certificates and other documents necessary for examining and giving approval thereof Should such change or substitution of materials, subsequently approved, results in use of material of price lower than that of the material specified in the Schedule of Items or Technical Specifications, the rates of work affected by the substitution shall be proportionately reduced. Similarly, in case the substitution results in use of material of price higher than that specified in the Schedule of Items or Technical Specifications, the rates of work affected by the substitution shall be proportionately increased.

Codes

The standards to be referred as follows:

© 2022 MECON Limited All rights reserved

NBC, BIS, BPE, Neufert, Time Saver Standards

The years of publication against various standards, referred in this specification, correspond to the latest standards as on date of preparation of this specification.

During use of this specification in future, the latest publication as on date shall be referred to. Where standards are not yet published by the BIS, NBC, BPE or IRC, adoptable British Standards or other International Standards shall apply.

ARCHITECTURAL WORKS

General Specifications for Architectural Works

1.0 FLOORING

1.1 Terrazo Tiles / Cast-in-Situ

1.1.1 **Precast terrazo tiles** 22 mm thick with graded marble chips of size upto 12 mm, laid in floors, and landings shall be used.

1.1.2 **Chequered terrazo tiles** 22 mm thick with graded marble chips of size up to 6 mm in floors, shall be used.

1.1.2 40mm thick cast in-situ **mosaic flooring** shall be used.

1.2. Ceramic / Vitrified Tiles

1.2.1. **Ceramic glazed floor tiles** of size 300x300 mmx6.8 mm of 1st quality conforming to IS: 15622, of approved make, shade & colour shall be used. Anti-skid Ceramic tiles with matt finish will be used in toilets.

1.2.2 **Vitrified floor tiles** with water absorption less than 0.08% and conforming to IS: 15622, of approved make, in all colours, sizes and shades shall be used.

1.3 Acid / Alkali Resisting Tiles

1.3.1 10 mm thick **acid and/or alkali resistant tiles** of approved make and colour using acid and/or alkali resisting mortar bedding, and joints filled with acid and/or alkali resisting cement as per IS: 4457.

1.4 PVC Floor Finish

1.4.1 2mm thick antistatic **PVC tiles** as per IS:3462 and laid as per IS:5318 over concrete under bed of 38mm shall be provided.

1.5 Finish for Stair Cases

© 2022 MECON Limited All rights reserved

1.5.1 Risers and treads of staircases will be provided finish matching with the Skirting/floor finish with 25mm nosing. Staircase wall will be given skirting of same finish to a height of 300mm. On treads of stair, stepper tiles /antiskid tiles will be provided.

1.6 **cement concrete Floor**

1.6.1 **52 mm thick cement concrete flooring** with metallic hardener / non metallic hardener topping, under layer 40 mm thick cement concrete shall be uesd.

1.6.2 **40mm thick cement concrete flooring** shall be used.

1.6.3 **Chequerred precast cement concrete tiles** 22 mm thick of approved size, shade shall be used in footpath & courtyard

1.6.4 G**lass strips** (40 mm wide and 4 mm thick) in joints of terrazo/ cement concrete floors.

1.7 **Stone Floor**

1.7.1 25 mm thick **kota stone flooring** shall be used.

1.7.2 18 mm thick Marble stone flooring shall be used.

1.7.3 Flamed finish Granite **stone flooring** in required design and patterns, in linear as well as curvilinear portions of the building all complete as per the architectural drawings with 18 mm thick stone slab.

1.7.4 Machine cut, mirror polished, **Italian Marble stone flooring** laid in required pattern in linear portion of the building all complete as per architectural drawings, with 18 mm thick stone slab

1.7.5 40 mm thick fine dressed **stone flooring (Red sand stone / White sand stone)** over 20 mm (average) thick base of cement mortar shall be used.

1.8 **Miscellaneous**

1.8.1 Angles 75 x 75 x 6mm (minimum) with tugs wilt be provided for edge protect Cutouts/openings in floor slabs, edge of drains covering gratings, edge of R C C cable /pipe trenches of any other p1 where breakage of edges / corners is expected

1.8.2 1st quality **ceramic glazed wall tiles** conforming to IS: 15622 of approved make, in all colours, shades, sizes shall be used.

1.8.3 Removable raised/**false access flooring**:

© 2022 MECON Limited All rights reserved

Top of panel: PVC tile or sheet / granite tiles / vitrified tiles / high pressure laminate shall be used as topping above the panel.

Panel: Access Floor panel shall be steel welded construction with an enclosed bottom pan with uniform pattern of 64 hemispherical cones. The top and bottom plates of Steel Gauges: top 0.6 mm and bottom 0.7 mm fused spot welded together (minimum 64 welds in each dome and 20 welds along each flange). The panel should be Corroresist epoxy coated for lifetime rust protection and cavity formed by the top and bottom plate is filled with Pyrogrip noncombustible Portland cementitious core mixed with lightweight foaming compound.

1.8.4 **60mm thick cement concrete paver block** of M-35 grade with approved colour, design & pattern will be used in footpath, parks, lawns etc.

1.8.5 **80 mm thick cement concrete paver block** of M-30 grade with approved color design and pattern will be used in drive ways or light traffic parking etc.

1.8.6 Factory made **cement concrete kerb stone** of M-25 grade shall be used

1.8.7 **Glass mossaic tiles** on finished plain wall surface of size 20 mm x 20 mm x 4 mm shall be used.

1.8.8 2 mm thick solvent free **epoxy flooring** system over a coat of solvent free epoxy primer on minimum 30 days old cleaned & scarified thoroughly with vaccum cleaner above 40 mm thick Cement concrete flooring shall be used.

1.8.9 O**n wall,** solvent free water based **epoxy coating** over a coat of solvent free epoxy primer on minimum 30 days old cleaned & scarified thoroughly with vaccum cleaner on cement plaster.

1.9 **Wooden Floor**

1.9.1 **25 mm wooden planking, tongued and grooved in flooring**, including fixing with iron screws complete with Second class teak wood shall be used.

1.9.2 **38 mm thick wood block flooring** of first class teak wood laid over 25mm thick leveling layer of cement concrete shall be used.

2.0 **SKIRTING /DADO**

2.1 Minimum 125mm skirting matching with floor finish will be provided in all areas unless specified other wise elsewhere.

© 2022 MECON Limited All rights reserved

2.2 Toilets will be provided with dado up to the height of 2100mm from floor with colour / design glazed tiles of minimum 5mm thickness generally as per IS:777.

2.3 Areas coming in contact with acid / alkali spillage / fume, dado of acid /alkali resistant tilling will provided to a height of 2l00 mm set in potassium silicate mortar and joints pointed with resin bounded mortar.

3.0 PLASTERING

3.1 SCOPE:

3.1.1 The work covered under this specification consist of supplying all materials and rendering all types of plaster / pointing finishes strictly in accordance with these specifications and applicable drawings etc.

3.2 APPLICABLE CODES & SPECIFICATIONS:

3.2.1 The relevant I.S. specifications, standards and codes given below are made a part of this specification. All standards, specifications, code of practices referred to herein shall be the latest edition including all applicable amendments, revisions and additional publications.

3.2.2 List of Indian Standards:

No.	IS. No.	I.S. Particulars
1	IS. 712	Specification for building limes
2	I.S. 1200 (Part-XII)	Method of measurement of building and civil engineering works. (Plastering & Pointing)
3	I.S. 1661	Code of practice for application of cement and cement finishes.
4	I.S. 2394	Code of practice for application of lime plaster, finish.
5	I.S 2402	Code of practice for external rendered finishes.

© 2022 MECON Limited All rights reserved

6	I.S. 6278	Code of practice for white washing and colour washing

3.3 CEMENT PLASTER WITH CEMENT FINISH:

3.3.1 The specifications for cement, sand and water shall generally conform to their relevant specifications described under 'Reinforced Concrete And Allied Works'.

3.3.2 Cement and fine screened sand shall be thoroughly mixed dry in the proportion specified.

3.3.3 Only minimum water shall then be added and the mortar mixed thoroughly until homogenous and required consistency is obtained.

3.3.4 No more mortar shall be mixed than can be used up in half an hour.

3.3.5 The surface to be plastered shall first be thoroughly cleaned and all joints raked out at least 12 mm deep to serve as keys. The raking shall be done carefully and no chipping of the masonry shall be allowed.

3.3.6 All concrete surfaces shall be hacked to provide necessary bonding for the plaster.

3.3.7 All junctions of RCC and brickwork (both horizontal as well as vertical) shall be laced with chicken mesh of gauge 22 with a minimum of 150mm overlap on either side completely covering the junction before taking up the plastering work.

3.3.8 The rate for plaster should include the hacking of surfaces also. All dirt, soot, oil, paint or any other material that might interfere with satisfactory bond shall be removed.

3.3.9 Soft and crumbling brick and stone work, oil soaked material and timber are not suitable for receiving plaster directly and therefore, the surface shall be brushed and washed with fresh water and maintained in a thoroughly wet condition for 24 hours before commencing plastering.

3.3.10 Plastering shall not be commenced until the preparatory work is approved by the Engineer-In-charge.

3.3.11 The cement mortar for the plaster work shall be as specified in the item of schedule.

© 2022 MECON Limited All rights reserved

3.3.12 The plaster shall be applied with some what more than the required thickness and leveled with a wooden trowel so that the final plaster after trowelling will have the specified thickness for concrete and bricks masonry surfaces.

3.3.13 Before the scratch coat hardens, the surface shall be cross scratched to provide mechanical key for the final coat. The cross scratching shall be horizontal as far as possible to aid curing.

3.3.14 The surface shall be kept continuously damp for at least two days immediately following its applications. It shall then be allowed to dry.

3.3.15 Fine sand of approval quality shall be used for finish coat. The finish coat shall be about 5 mm thick.

3.3.16 There shall be at least 3 days interval between application of the first coat an finish coat. Before applying the finishing coat, dampen the first coat evenly by frog spray wherever possible and the coat shall be applied from top to bottom in one operation eliminating joining marks.

3.3.17 The plaster shall be well pressed into the joints and the surface rubbed smooth after floating it with a coat of pure cement.

3.3.18 The use of dry cement shall not be permitted.

3.3.19 All plaster work shall be kept damp continuously for a minimum period of 10 days after the application of finishing coat.

3.3.20 To prevent excessive evaporation of the sunny or windward sides of buildings in hot dry weather, matting or gunny bags should be hung over the outside of the plaster to keep it moist.

3.3.21 Should the plaster crack through neglect of watering or for any other fault of the contractor, the work shall be removed and redone at the contractor's expenses.

3.3.22 Should the contractor fail to water the work to the satisfaction of the Engineer-In-charge, the latter may engage requisite labour to water the work properly at the cost of the contractor.

3.4 WATER PROOF CEMENT PLASTER:

3.4.1 The same specification as detailed for 'Cement Plaster With Cement Finish' shall apply to this plaster also.

3.4.2 However, plaster shall be finished smooth with neat cement and water proofing compound of approved manufacture shall be added in cement mortar @2% by weight of cement.

© 2022 MECON Limited All rights reserved

3.4.3 The waterproofing compound shall have to be supplied by the contractor. No extra shall be paid or mixing the water proofing compound in the mortars as directed.

3.5 SAND FACED CEMENT PLASTER:

3.5.1 Surface preparation shall be done in the same manner as for 'Cement Plaster With Cement Finish'.

3.5.2 Sand faced plaster shall be done in two coats. Backing coat shall be in cement mortar 1:4 and finishing coat shall be in cement mortar 1:3.

3.5.3 The sand to be used for the finishing coat shall be screened to pass through 2.36 mm mesh sieve and all material passing through 1.18 mm mesh sieve shall be eliminated.

3.5.4 The sand shall be thoroughly washed to remove all dust and silt.

3.5.5 The cement and sand shall be mixed dry until the mixture is homogenous and water shall then be added gradually to the required extent, the mixture being turned over as often as required to produce a homogenous mass of uniform colour.

3.5.6 Backing coat of 12 mm thick with cement mortar 1:4 shall be applied first. Approved water proofing compound @ 2% by weight of cement shall be added in the backing coat.

3.5.7 No extra shall be paid for mixing the water proofing compound in the cement mortar as directed.

3.5.8 The surface shall be made even and uniform by means of wooden floats and roughened with wire brushes to give a good bond to the finishing coat.

3.5.9 The backing coat should then the thoroughly cured for at least 7 days before the finishing coat is taken in hand.

3.5.10 The finishing coat of 8 mm thick in cement mortar 1:3 should then be applied uniformly with wooden float.

3.5.11 The entire surface should then be rubbed with approved sponges to expose the sand grains uniformly and predominantly.

3.5.12 The surface shall be cured again for at least 10 days.

3.6 GROOVES IN SAND FACED PLASTER:

3.6.1 The horizontal and vertical grooves shall be exactly to the required depth and width as shown in the drawings.

© 2022 MECON Limited All rights reserved

3.6.2 The grooves shall be neatly finished with extreme care.

3.6.3 All horizontal and vertical grooves shall be in perfect straight lines without any break in the continuity.

3.6.4 Only such grooves as specified in the drawing shall be paid for.

3.6.5 The finished external plastered surface shall be subjected to water jet in order to prove the water tightness of the plaster. Any water seepage seen inside the structure further to the test / rains shall be rectified by the contractor at no extra cost.

3.7 MODE OF MEASUREMENT:

3.7.1 The unit of measurement for all the plaster items shall be square metre.

3.7.2 The measurement shall be taken on unplastered surfaces as per the provisions of IS 1200.

3.7.3 The unit of measurement for grooves in sand faced cement plaster shall be running metre.

3.8 ROUGH CAST PLASTER

3.8.1 MATERIALS:

3.8.1.1 All materials shall conform to the standards already specified for plaster described above. The preparation of the surface to receive the rough cast plaster shall be as described under sand face plaster. Rough cast plaster shall be carried out in two coats. First coat shall consist of 1 part of cement to 4 parts of clean sand or as specified otherwise. The finished thickness of the first coat shall be 12mm. and shall be laid by throwing the mortar (By using strong whipping motion) on the prepared surface with a trowel in a uniform layer but shall not be smooth. The second coat consists of 1 part of cement and 3 part of 6 mm. to 10 mm down gravel all as approved by the Engineer-in-Charge. The gravel shall thoroughly be got cleaned with water removing all dirt and other organic materials. All these ingredients shall be mixed into a paste which shall be flung upon the first coat with large trowels to form an even protective coat. The second coat must be applied while the first coat is still soft and unset. The thickness of this coat shall be 13 mm. only. Due care shall be taken to avoid concentration of either large size or small size of gravel in one place. A sample of rough cast plaster shall also be got approved by the Engineer-in-Charge as regards the texture etc. before proceeding further with the work. All subsequent work shall generally conform to the approved sample panel. The finished work shall be cured for a minimum period of seven days.

© 2022 MECON Limited All rights reserved

3.8.1.2 General workmanship, scaffolding, preparation of surface, curing etc. shall conform to the specification already laid down under sand faced plastering.

3.8.1.3 The contractor shall take special care at the time of plastering or pointing to keep the M.S/ Aluminium window, door / wallspan etc. fixed by other agency in correct shape, position and to cover the same with required hessian cloth/gunny bags to keep away from sprinkling of plasters/paint etc. The damage caused to the above if any, shall be made good by the contractor at his own cost.

3.8.2 MODE OF MEASUREMENT:

3.8.2.1 Area of plastering will be measured net and shall be paid for. The measurement of length of wall plastering shall be taken between walls or partitions (dimensions before plastering shall be taken) for the length and from top of the floor or skirting or dado as the case may be to the underside of ceiling for the height. The measurement shall be as per IS 1200. The rate shall include the cost of finishing all the edges, corners, cost of all materials, labours, scaffolding, transport, curing etc.

3.8.2.2 The rate shall include the cost of finishing all the edges, corners, cost of all materials, labour, transport, scaffolding, curing etc.

3.8.2.3 Groove, if shown in the drawings shall be paid separately according to the relevant item in the schedule of quantities.

3.8.2.4 The rate for plastering should include the cost of work towards the following items for co-ordination with electrical item:

3.8.2.5 Neat plastering around DBs, junction boxes, M,S. boxes etc. should be done and made matching with the wall finish after installation of electrical equipments.

3.8.2.6 All DBs, service boxes, covers etc. should be covered by a plastic cloth or other suitable covering materials such that water or materials should not splash the same during brick work and plastering work. This is to be done in such a way that electrical equipments as well as painted surfaces are not spoiled.

3.8.2.7 For fixing M.S. boxes, DBs etc. Thiyya should be given such that the required face of the MS. box, DB covers etc inline with final finished plastered surface.

3.8.2.8 The rate for the item shall also include rounding up of corner and angles making sharp corners and angles finishing around ceiling rose and electrical fittings etc. fixed by other agencies, finishing of top of dado and skirting (zad finishing), junctions of roof and wall or beam with the finish as specified in the item. Plastering of brick and concrete cornice and copings

© 2022 MECON Limited All rights reserved

and plastering in restricted areas, if any, shall not be measured separately. Architectural bands and narrow widths of plaster over structural as well as non-structural and the line when prepared in the same thickness of plaster shall not be measured separately and shall be covered by respective plaster items

4.0 SPECIFICATIONS FOR PAINTING

4.1.0 SCOPE OF WORK:

4.1.1 The work covered under these specifications consist of furnishing the various types of paints and also the workmanship for these items, in strict compliance with these specifications, which are given in detail here-in-after with the item of schedule of quantities.

4.2.0 MATERIALS:

4.2.1 Paints, oils, varnishes etc. of approved brand and manufacture shall be used. Ready mixed paints as received from the manufacturer without any admixture shall be used.

If for any reason, thinning is necessary in case of ready mixed paint, the brand of thinner recommended by the manufacturer or as instructed by the Engineer-in-Charge shall be used. Approved paints, oils or varnishes shall be brought to the site of work by the contractor in their original containers in sealed condition. The materials shall be brought in at a time in adequate quantities to suffice for the whole work or at least a fortnight's work. The materials shall be kept in the joint custody of the contractor and the Engineer-in-charge. The empties shall not be removed from the site of work, till the relevant item of work has been completed and permission obtained from the Engineer-in-Charge.

4.2.2 The contractor shall associate the chemist of paint manufacturers before commencement of work, during and after the completion of work who shall certify the suitability of the surface to receive painting and the paint before use etc.

4.3.0 COMMENCING WORK:

4.3.1 Scaffolding: Wherever scaffolding is necessary, it shall be erected on double supports tied together by horizontal pieces, over which scaffolding planks shall be fixed. No ballies, bamboos or planks shall rest on or touch the surface which is being painted.

4.3.2 Where ladders are used, pieces of old gunny bags shall be tied on their tops to avoid damage or scratches to walls.

4.3.3 For painting of the ceiling, proper stage scaffolding shall be erected.

© 2022 MECON Limited All rights reserved

4.3.4 Painting shall not be started until and unless the Engineer-in-Charge has inspected the items of work to be painted, satisfied himself about their proper quality and given his approval to commence the painting work.

4.3.5 Painting, except the priming coat, shall generally be taken in hand after all other builders' work is practically finished.

4.3.6 The rooms should be thoroughly swept out and the entire building cleaned up at least one day in advance of the paint work being started,

4.4.0 PREPARATION OF SURFACE:

4.4.1 The surface shall be thoroughly cleaned. All dirt, rust, scales, smoke and grease shall be thoroughly removed before painting is started. Minor patches, if any, in plastered/form finished surfaces shall be repaired and finished in line and level in CM. 1:1 and cracks & crevices shall be filled with approved filler, by the contractor at no extra cost to the Department. The prepared surface shall have received the approval of the Engineer-in-Charge after inspection, before painting is commenced.

4.5.0 APPLICATION:

4.5.1 Before pouring into smaller containers for use, the paint shall be stirred thoroughly in its containers. When applying also, the paint shall be continuously stirred in the smaller containers so that consistency is kept uniform.

4.5.2 Painting works on all surfaces shall be carried out as per the schedule of finishes, BOQ and the colour scheme drawings as provided by the Consultant / as directed by the Department. The contractor will make suitable samples at site for Engineer Incharge's approval before taking up the work in hand and they will be allowed to proceed with the work only after getting Department's / Engineer Incharge's approval for the same.

4.5.3 The painting works shall be carried out evenly and smoothly by means of crossing and laying off, the later in the direction of the grain in case of wood. The crossing & laying off consists of covering the area with paint, brushing the surface hard for the first time and then brushing / rolling alternately in opposite directions two or three time and then finally brushing lightly in direction at right angles to the same. In this process, no brush / roller marks shall be left after the laying off is finished. The full process of crossing and laying will constitute one coat.

4.5.4 Where so stipulated, the painting shall be done with spraying. Spray machine used may be (a) a high pressure (small air aperture) type or (b) a low pressure (large air gap) type, depending on the nature and location of work to be carried out. Skilled and experienced workmen shall be employed for this class of work. Paints used shall be brought to the

© 2022 MECON Limited All rights reserved

requisite consistency by adding a suitable thinner. Spraying should be done only when dry condition prevails.

4.5.5 Each coat shall be allowed to dry out thoroughly and rubbed smooth before the next coat is applied. This should be facilitated by thorough ventilation.

4.5.6 Each coat except the last coat, shall be lightly rubbed down with sand paper or fine pumice stone and cleaned of dust before the next coat is laid.

4.5.7 No left over paint shall be put back into the stock tins. When not in use, containers shall be kept properly closed.

4.5.8 The final painted surface shall present a uniform appearance and no streaks, blisters, hair marks from the brush or clogging of paint puddles in the corners of panels, angles of moldings etc. shall be left on the work.

4.5.9 In case of cement based paints/primers, the absorbent surfaces shall be evenly damped so as to give even suction. In any weather, freshly painted surfaces shall be kept damp for at least two days.

4.5.10 In painting doors and windows, the putty around the glass panes must also be painted, but care must be taken to see that no paint stains etc. are left on the glass. Tops of shutters and surfaces in similar hidden locations shall not be left out while painting. Perspect covers of electrical switch boxes have to be painted from inside by removing them. Care shall be taken while removing them in position after painting with respective approved paints. In painting steel work, special care shall be taken while painting over bolts, nuts, rivets, overlaps etc.

4.5.11 The additional specifications for primer and other coats of paints shall be as in accordance to the detailed specifications under the respective headings.

4.5.12 Any damage caused during painting work to the existing works/surfaces shall be made good by the contractor at his own cost.

4.6.0 BRUSHES AND CONTAINERS:

4.6.1 After work, the brushes /rollers shall be completely cleaned off paint and linseed oil by rinsing with turpentine. A brush / roller in which paint has dried up is ruined and shall on no account be used for painting work. The containers, when not in use, shall be closed, kept air tight and shall be kept at a place free from dust. When the paint has been used, the containers shall be washed with turpentine and wiped dry with soft clean cloth, so that they are clean & can be used again.

4.7.0 MEASUREMENT:

© 2022 MECON Limited All rights reserved

4.7.1 Painting, unless otherwise stated, shall be measured by area in square metre. Length and breadth shall be measured correct upto two places of decimal of a metre.

4.7.2 No deduction shall be made for opening not exceeding 0.05 sqm. and no addition shall be made for painting to the beading, moulding edges, jambs, soffits, sills, architraves etc. of such openings.

4.7.3 In measuring painting, varnishing, oiling etc. of joinery and steel work etc., the co-efficients as in the following table shall be used to obtain the areas payable. The co-efficients shall be applied to the areas measured flat and not girthed in all cases.

4.7.4 In case of painting of door shutter with push plates in plastic laminate, deduction will be made for area of such laminations.

4.7.5 **Table of Co-efficients to be applied over areas of different surfaces to get equivalent plain areas.**

1)	**DESCRIPTION OF WORK**	**MULTIPLYING CO-EFFICIENTS**
I	**WOOD WORK: DOORS, WINDOWS ETC.**	
1	Panelled or framed and braced doors, windows etc.	1.30 (for each side)
2	Ledged & battened or ledged, battened & braced doors, windows etc.	
3	Flush doors etc	1.20 (for each side)
4	Part panelled and part glazed or gauzed doors, windows etc.	1.00 (for each
5	Fully glazed or gauzed doors, windows etc.	0.80 (for each side)
6	Fully venetioned or louvered doors, windows etc	1.80 (for each side)
7	Trellis (or Jaffri) work one way or two way.	2.00 (For painting all over)
8	Carved or enriched work:	2.00 (for each side)
9	Weather boarding:	1.20 (for each side)
10	Wood shingle roofing:	1.10 (for each side)
11	Boarding with cover fillets and match boarding.	1.05 (for each side)
12	Tile and slate battening:	0.80 (for painting all over)
II.	**STEEL WORK: DOORS, WINDOWS ETC.**	
13	Plain sheeted steel door or windows:	1.10 (for each side)
14	Fully glazed or gauzed steel doors and windows	0.50 (for each side)
15	Partly panelled and partly gauzed or glazed doors and windows.	0.80 (for each side)
16	Corrugated sheeted steel doors or windows.	1.25 (for each side)

© 2022 MECON Limited All rights reserved

17	Collapsible gates	1.50 (for painting all over)
18	Rolling shutters of inter locked laths.	1.10 (for each side)
III.	**GENERAL WORKS:**	
19	Expanded metal, hard drawn steel wire fabric of approved quality, grill work and gratings in guard bars, balusters, railings, partitions and	1.00 (for painting all over)
20	Open palisade fencing and gates including standards, braces, rails, stays etc. in timber or steel.	1.00 (for painting all over)
NOTE: The height shall be taken from the bottom of the lowest rail, if the palisades do not go below it (or from the lower end of palisades, if they project below the lowest rail) upto the top of palisades but not upto the top of standards, if they are higher than the palisades.		
21	Wire gauze shutters including painting of wire gauze.	1.00 (for each side).

4.8.0 Explanatory notes on the table of Co-efficients.

4.8.1 Where doors, window etc. are of composite types other than those included in para 7.3, the different portions shall be measured separately with their appropriate co-efficients, the centre line of the common rail being taken as the dividing line between the two portions.

4.8.2 Measurements for doors, windows etc. shall be taken flat (and not girthed) over all including chowkhats or frames, where provided. Where chawkhats or frames are not provided, the shutter measurements shall be taken.

4.8.3 Collapsible gates shall be measured for width from outside to outside of gate in its expanded position and for height from bottom to top of channel verticals. No separate measurements shall be taken for the top and bottom guide, rails, rollers, fittings etc.

4.8.4 Rolling shutters of interlocked laths shall be measured for the actual shutter width and the height from bottom of opening to the centre of the shaft. No separate measurements shall be taken for painting guides and other exposed features within or outside the shutter area. The painting of top cover or hood shall however be measured separately.

4.8.5. Co-efficients for sliding doors shall be the same as for normal types of doors as mentioned in the table. Measurements shall be taken outside of shutters, and no separate measurements shall be taken for painting guides, rollers, fittings etc.

4.8.6. Measurement of painting of doors, windows, collapsible gates, rolling shutters etc. as above shall be deemed to include painting all iron fittings in the same or different shade for which no extra will be paid.

© 2022 MECON Limited All rights reserved

4.8.7. The measurements as above shall be deemed to include also the painting of edges, blocks, cleats etc. for which no extra will be paid.

4.8.8. The co-efficients for doors and windows shall apply irrespective of the size of frames and shutter members.

4.8.9. When the two faces of a door, window etc. are to be treated with different specified finishes, measurable under separate items, the edges of frames and shutters shall be treated with the one or the other type of finish as ordered by the Engineer-in-Charge, and measurement of this will be deemed to be included in the measurement of the face treated with that finish.

4.8.10. In the case where shutters are fixed on both faces of the frames, the measurements for the door frame and shutter on one face shall be taken in the manner already described, while the additional shutter on the other face will be measured for the shutter area only excluding the frame.

4.8.10.1 Where shutters are provided with clearance at top or/and bottom, such openings shall be deducted from the over all measurements and relevant co-efficients shall be applied to obtain the area payable.

4.8.11 In case of trellis (or jaffri) work, the measurements shall include the painting of the frame member for which no separate measurements shall be taken. Trellis door or window shutters shall also be measured under trellis work.

4.8.12 Wherever air conditioning grill, lighting, fixtures etc. in false ceiling are painted along with, measurements shall be taken over all without deductions for opening in grills and no extra shall be paid for the grills. If grills, fixtures etc. are not painted, area of fixtures or grills as measured flat (not girthed) shall be deducted when it exceeds 0.05 sqm. individuals. Where walls and ceilings are painted in separate colours, the junctions of two paints shall be brought down on the walls in a straight line by about 6mm.to 12mm. if so desired, if the junctions of walls and ceilings are not even. Nothing extra shall be paid to the contractor on this account. Beading wherever provided shall not be measured separately but shall be deemed to be included in the area of false ceiling etc. measured flat (not girthed).

4.8.13 For painting open palisade, fencing and gates etc, the height shall be measured from the bottom of the lowest rail, if the palisades do not go below it, (or from the lower end of the palisades, if they project below the lowest rail), upto the top of rails or palisades whichever are higher, but not up to the top of standards when the latter are higher than the top rails or palisades.

4.8.14 For trusses, compound girders, stanchions, lattice girder and similar work, actual areas will be measured in sqm. and no extra shall be paid for painting on

© 2022 MECON Limited All rights reserved

bolt heads, nuts, washers etc. even when they are picked out in a different tint to the adjacent work.

4.8.15 Painting of rain water, soil, waste, vent and water pipes etc. shall be measured in running metres of the particular diameter of the pipe concerned. Painting of specials such as bends, heads, branches, junctions, shoes etc. shall be included in the length and no separate measurements shall be taken for these or for painting brackets, clamps etc.

4.8.16 Measurements of wall surfaces and wood and other works not referred to already shall be recorded as per actual and opening exceeding 0.05 sqm. shall be deducted to get the net payable area. Length and breadth shall be measured correct up to two places of decimal of a metre and area so worked out shall be correct up to two places of decimal of a square metre.

4.8.17 In case the items of work requiring painting are inclusive of cost of painting, the painting carried out shall not be measured separately.

4.9.0 PRECAUTIONS:

4.9.1 All furnitures, lightings, fixtures, sanitary fittings, glazing, floors etc. shall be protected by covering and stains, smears, splashings, if any shall be removed and any damage done shall be made good by the contractor at his cost.

4.10.0 RATES:

4.10.1 Rates shall include cost of all labour and materials involved on all the operations described above and in the particular specifications given under the several items.

4.11.0 PAINTING PRIMING COAT ON WOOD, IRON OR PLASTERED SURFACES:

4.11.1 PRIMER

4.11.1.1 The primer for wood work, iron work or plastered surface shall be as specified in the description of the item.

Primer for Wood work / Iron & Steel / Plastered / Aluminium surfaces shall be as specified below:

SN	SURFACES	PRIMER TO BE USED
	Wood work (hard & soft wood);	Pink conforming to I.S. 3536-1966
	Resinous wood and ply wood	Aluminium primer
	Iron & steel, Aluminum and	Zinc chromate primer conforming to I.S.

© 2022 MECON Limited All rights reserved

	galvanized steel work	104-1962
	Plastered surfaces, cement brick work, asbestos surfaces for oil bound distemper and paint:	Cement Primer

4.11.1.3 The primer shall be ready mixed primer of approved brand and manufacture.

4.11.2 Preparation of surface

4.11.2.1 Wood work: The wood work to be painted shall be dry and free from moisture.

4.11.2.1.1 The surface shall be thoroughly cleaned. All unevenness shall be rubbed down smooth with sand paper and shall be well dusted. Knots, if any, shall be covered with preparation of red lead made by grinding red lead in water and mixing with strong glue sized and used hot. Appropriate filler material with same shade as paint shall be used where so desired by the Engineer-in-charge.

4.11.2.1.2 The surface treated for knotting shall be dry before painting is applied. After the priming coat is applied, the holes and indentation on the surface shall be stopped with glaziers putty or wood putty (for specifications for glaziers putty and wood putty- refer as mentioned here-in-before). Stopping shall not be done before the priming coat is applied as the wood will absorb the oil in the stopping and the latter is therefore liable to crack.

4.11.2.2 Iron and Steel Work: All rust and scales shall be removed by scrapping or by brushing with steel wire brushes. Hard skin of oxide formed on the surface of wrought iron during rolling which becomes loose by rusting, shall be removed.

4.11.2.2.1 All dust and dirt shall be thoroughly wiped away from the surface.

4.11.2.2.2 If the surface is wet, it shall be dried before priming coat is undertaken.

4.11.2.3 Plastered Surface: The surface shall ordinarily not be painted until it has dried completely. Trial patches of primer shall be laid at intervals and where drying is satisfactory, painting shall be taken in hand. Before primer is applied, holes and undulations shall be filled up with plaster of paris and rubbed smooth.

4.11.3 Application: The primer shall be applied with brushes, worked well into the surface and spread even and smooth. The painting shall be done by crossing and laying off as described here-in-before.

4.11.4 Other Details: The specifications for Painting (General) shall hold good so far as it is applicable.

© 2022 MECON Limited All rights reserved

4.12.0 PAINTING WITH SUPERIOR QUALITY & FLAT OIL READY MIXED PAINTS ON NEW SURFACE:

4.12.1 Paint: Ready mixed paints shall be of approved brand and manufacture and of the required shades. They shall conform in all respects to the relevant IS specifications.

4.12.1 Preparation of Surface:

4.12.2.1 Wood work: The surface shall be cleaned and all unevenness removed as in para 11.2. Knots if visible, shall be covered with a preparation of red lead. Holes and indentations on the surface shall be filled in with glaziers putty or wood putty and rubbed smooth before painting is done. The surface should be thoroughly dry before painting.

4.12.2.2 Iron and steel work: The primer coat shall have dried up completely before painting is started. Rust and scaling shall be carefully removed by scraping or by brushing with steel wire brushes. All dust and dirt shall be carefully and thoroughly wiped away.

4.12.2.3 Plastered surfaces: The priming coat shall have dried up completely before painting is started. All dust or dirt that has settled on the priming coat shall be thoroughly wiped before painting is started.

4.12.3 Application: The specifications mentioned here-in-before shall hold good as far as applicable.

4.12.4 The number of coats to be applied will be as stipulated in the item. The painted surface shall present a uniform appearance and glossy/semi glossy finish, free from streaks, blisters etc.

4.12.5 Other details: The specifications for Painting (General) specified here-in-before shall hold good in so far as they are applicable.

4.13.0 PAINTING WITH SYNTHETIC ENAMEL/SEMI GLOSSY PAINT ON NEW WORK:

4.13.1 Paint: Synthetic enamel / semi glossy paint of approved brand and manufacture and required shade shall be used for the top coat and an under coat of shade to match the top coat as recommended by the manufacturer shall be used. The paint shall be conforming to IS: 1932.

4.13.2 Preparation of Surface: This shall be as per painting with superior quality ready mixed paint as mentioned here- in- before

4.13.3 Application: The number of coats including the under coat shall be as stipulated in the item.

© 2022 MECON Limited All rights reserved

4.13.4 Under Coat: One coat of the specified paint of shade suited to the shade of the top coat shall be applied and allowed to dry overnight. It shall be rubbed next day with the finest grade of wet abrasive paper to ensure a smooth and even surface free from brush marks and all loose particles shall be dusted off. All the cracks, crevices, roughness etc. will be filled with approved putty as per manufacturer's recommendations.

4.13.5 Top Coat: Finishing coats of specified paint of the desired colour & shade shall be applied after the under coat is thoroughly dried. Additional finishing coats shall be applied, if found necessary to ensure a proper and uniform semi glossy surface.

4.13.6 Other Details: The specifications for "Painting (General)" mentioned here-in-before shall hold good as far as they are applicable.

4.14.0 PAINTING WITH ACRYLIC EMULSION/PLASTIC EMULSION PAINT.

4.14.1 Primer: The primer to be used for the painting with acrylic emulsion on cement concrete surfaces, plastered surfaces, A.C. sheets, timber and metal surfaces, if necessary, shall be of approved base and as per recommendations of the manufacturers.

4.14.2 Putty: Plaster filler to be used for filling up (putting) uneven surfaces, small cracks and holes etc. shall be of approved compound and as per recommendations of the manufacturers. No oil based putty shall be used. The putty should be made from a mixture of whiting and plastic emulsion paint or as per manufacturer's recommendations.

4.14.3 Finishing coats: All the finishing coats shall be of matt finish or any other finish as required by the Engineer-in-charge. The number of finishing coats shall be as specified in the item.

4.14.5 MODE OF MEASUREMENT:

4.14.5.1 All the measurements for payment shall be taken as per the provisions of IS 1200.

4.14.6 JOB REQUIREMENTS:

4.14.6.1 Acrylic emulsion paint is required to be provided on plastered and concrete surfaces in portions of the building.

4.14.6.2 All wood surfaces are to be painted with semi glossy synthetic enamel paint with an approved primer.

4.14.6.3 All shades and colours of paints shall be subjected to review and prior approval of Engineer-in-Charge shall be taken before the application.

© 2022 MECON Limited All rights reserved

4.15.0 DRY DISTEMPERING:

4.15.1 Distemper: Dry distemper (IS:427-1965) of approved brand and manufacture, colour and required shade shall be used. The dry distemper shall be stirred slowly in clean water using 0.6 litre of water per kg. of distemper or as specified by the manufacturers. Warm water shall preferably be used. It shall be allowed to stand for at least 30 minutes before use. The mixture shall be invariably well stirred before and during use to maintain an even consistency.

4.15.2 Preparation of surface: This shall be as for Painting work mentioned here in-before in so far as it is applicable.

4.15.3 Application: In case of new work, the treatment shall consist of a priming coat followed by the application of two or more coats of distemper till the surface shows an even colour.

4.15.3.1 Priming coat: Priming coat of whiting shall be applied over the prepared surface. The whiting (ground white chalk) shall be dissolved in sufficient quantity of warm water and thoroughly stirred to form a thin slurry which shall then be screened through a clean coarse cloth. Two kg. of gum and 0.4 kg. of copper sulphate dissolved separately in hot water shall be added for every cum. of the slurry which shall then be diluted with water to the consistency of milk so as to make a wash ready for use. No white washing coat shall be used as a priming coat for distempering.

4.15.3.2 The application of each coat as mentioned in the specifications for painting (General) here-in-before, shall hold good, as far as it is applicable.

4.16.0 OIL EMULSION (OIL BOUND) DISTEMPERING:

4.16.1 Oil bound distemper (IS:428-1969) of approved brand and manufacture, colour and required shade shall be used. The primer where used as on new work shall be cement primer or distemper primer as specified in the item. These shall be of the same manufacture as distemper. The distemper shall be diluted with water or any other prescribed thinner in a manner recommended by manufacturer. Only sufficient quantity of distemper required for days work shall be prepared.

4.16.2 Preparation of surfaces: The surface shall be prepared as described herein-before for Painting work in so far as it is applicable and approved putty/filler shall be applied to the entire area to get uniform and smooth surface before application of primer.

4.16.3 Application: The cement primer or distemper primer shall be applied by brushing and not by spraying. Hurried priming work shall be avoided, particularly on absorbent surfaces. New plaster patches in old work before applying oil bound distemper shall be treated with cement primer/distemper

© 2022 MECON Limited All rights reserved

primer. The surface shall be finished as uniformly as possible leaving no brush marks. Priming coat shall be allowed to dry for at least 48 hours before oil bound distemper is applied. Before applying distemper, the surface shall be lightly sand prepared to make it smooth for receiving the oil bound distemper, taking care not to rub out the priming coat. A time interval of at least 24 hours shall be allowed between consecutive coats to permit the proper drying of the preceding coat. Two or more coats of distemper as are found necessary shall be applied over the priming coat to obtain an even shade.

4.16.4 Other details: The specifications for "Painting (General)" mentioned here-in-before shall hold good as far as it is applicable.

4.17.0 WATER PROOFING CEMENT BASED PAINT:

4.17.1 Material: Cement based paint (IS:5410-1969) of approved manufacture, quality, shade and colour only shall be used.

4.17.2 Preparation of surfaces: The surface shall be thoroughly cleaned off all mortar dropping, dirt, dust, algae, grease and other foreign matter by brushing and washing the surfaces. The surface shall be thoroughly wetted with clean water before the water proof cement paint is applied. The prepared surface shall be got approved before painting is commenced.

4.17.3 Treatment with Bio wash: Antifungal treatment on external wall surface shall be provided with concentrated form of Biowash thinned with fresh water to a concentration level of 2% by volume chemical composition of BENZOL KONIUM CHLORIDE and BIPHNYL – 2.01 containing ISOPROPANOL with micro-biological activity. Apply a coat of Biowash and allow the same to soak for 12 to 14 hours. Wash the surface thoroughly with clean water and allow the surface to dry completely prior to painting/repainting works as per manufacturers specification

The prepared surface shall be got approved before painting is commenced.

4.17.4 The water proof cement paint shall be mixed in such quantities as can be used up with in an hour of its mixing as otherwise the mixture will set and thicken, affecting flow and finish.

4.17.5 Water proof cement paint shall be mixed with water in two stages. The first stage shall comprise of 2 parts of water proof cement paint and one part of water stirred thoroughly and allowed to stand for 5 minutes. Care shall be taken to add the water proof cement paint gradually to the water and not vice versa. The second stage shall comprise of adding further one part of water to the mix and stirring thoroughly to obtain liquid of workable and uniform consistency. In all cases the manufacturers instruction shall be followed meticulously.

© 2022 MECON Limited All rights reserved

4.17.6 Application: The solution shall be applied on the clean and wetted surface with brushes or spraying machine. The solution shall be kept well stirred during the period of application. To avoid direct heat of the sun during painting, the cement based paint shall be applied on the surface which is on the shady side. Cement based paint shall not be applied on the surfaces already treated with white wash, colour wash, dry or oil bound distemper, varnishes, paints etc. It shall not be applied on gypsum, wood and metal surfaces.

4.17.7 Other details: The specifications for Painting (General) mentioned here-in-before shall hold good as far as they are applicable.

4.17.8 Mode of measurement for dry distemper, oil bound distemper and water proof cement paint: All measurement for payment shall be taken on net surface area actually painted unless otherwise specified and no co-efficient shall be applied for working out areas. Deductions will be made from areas for opening/obstructions not painted, if they are individually more than 0.05 sqm. Length and breadth shall be taken correct up to two places of decimal of a meter and areas shall be worked out correct up to two places of decimal of a square meter. Measurements shall be as per the provisions of IS 1200.

4.17.9 The number of coats of each treatment shall be as stated in the schedule of quantities. The whole surface shall be applied with approved putty/filler to get uniform and smooth surface at no extra cost to the Department.

4.17.10 Rates: The rate shall include cost of all materials and labour involved in all the operation described above.

4.18.0 EXTERIOR EMULSION PAINTING:

Material: Weatherproof Exterior Emulsion paint which is a water-based 100% acrylic, exterior wall finish shall be used. This shall be a high performance, long-lasting exterior paint specially formulated to withstand extreme tropical conditions of high rainfall, humidity and heat. It should provide excellent resistance against the growth of algae and fungi on the walls. It should also offer excellent protection against alkali and UV degradation.

4.18.1 Preparation of surfaces: The surface shall be thoroughly cleaned off all mortar dropping, dirt, dust, algae, grease and other foreign matter by brushing and washing the surfaces. The surface shall be thoroughly wetted with clean water.

4.18.2 Treatment with Biowash: antifungal treatment on external wall surface shall be provided with concentrated form of Biowash thinned with fresh water to a concentration level of 2% by volume chemical composition of BENZOL KONIUM CHLORIDE and BIPHNYL – 2.01 containing ISOPROPANOL with micro-biological activity. Apply a coat of Biowash

© 2022 MECON Limited All rights reserved

and allow the same to soak for 12 to 14 hours. Wash the surface thoroughly with clean water and allow the surface to dry completely prior to painting/repainting works as per manufacturer's specification.

The prepared surface shall be got approved before painting is commenced.

4.18.3 The exterior emulsion paint shall be mixed in such quantities as can be used up with in an hour of its mixing as otherwise the mixture will set and thicken, affecting flow and finish.

4.18.4 In all cases, mixing of the various constituents and application procedure shall be strictly as per the manufacturers.

4.18.5 Application: The solution shall be applied on the clean and wetted surface with brushes or spraying machine. The solution shall be kept well stirred during the period of application. To avoid direct heat of the sun during painting, the exterior emulsion paint shall be applied on the surface which is on the shady side. Exterior emulsion paint shall not be applied on the surfaces already treated with white wash, colour wash, dry or oil bound distemper, varnishes, paints etc. It shall not be applied on gypsum, wood and metal surfaces.

4.18.6 Other details: The specifications for Painting (General) mentioned here-in-before shall hold good as far as they are applicable.

4.18.7 Mode of measurement for exterior emulsion paint: All measurement for payment shall be taken on net surface area actually painted unless otherwise specified and no co-efficient shall be applied for working out areas. Deductions will be made from areas for opening/obstructions not painted, if they are individually more than 0.05 sqm. Length and breadth shall be taken correct up to two places of decimal of a meter and areas shall be worked out correct up to two places of decimal of a square meter. Measurements shall be as per the provisions of IS 1200.

4.18.8 Rates: The rate shall include cost of all materials and labour involved in all the operation described above.

4.19.0 BEES WAXING OR POLISHING WITH READY MADE WAX POLISH: (NEW WORK):

4.19.1 Materials: The polishing shall be done with bees waxing prepared locally or with ready made wax polish of approved brand and manufacture, as stipulated in the description of item.

Where bees waxing is to be prepared locally, the following specifications for the same shall apply:

© 2022 MECON Limited All rights reserved

Pure bees wax free from paraffin or stearing adulterants shall be used. Its specific gravity shall be 0.965 to 0.969 and melting point shall be 63°C. The polish shall be prepared from a mixture of bees wax, linseed oil, turpentine and varnish in the ratio of 2: 1.5: 1: 0.5 by weight.

The bees wax and boiled linseed oil shall be heated over a slow fire. When the wax is completely dissolved, the mixture shall be cooled till it is just warm and turpentine and varnish added to it in the required proportions and the entire mixture shall be well stirred.

4.19.2 Preparation of surface: Preparation of surface will be as mentioned here-in-under with the exception that knotting, holes and cracks shall be stopped with a mixture of fine saw dust formed of the wood being treated, beaten up with sufficient bees wax to enhance cohesion.

4.19.3 Application: The polish shall be applied evenly with a clean soft pad of cotton cloth in such a way that the surface is completely and fully covered. The surface is then rubbed continuously for half an hour.

When the surface is quite dry, a second coat shall be applied in the same manner and rubbed continuously for one hour or until the surface is dry.

The final coat shall then be applied and rubbed for two hours (more if necessary) until the surface has assumed a uniform gloss and is dry showing no sign of stickiness. The final polish depends largely on the amount of rubbing which should be continuous and with uniform pressure, with frequent changes in the direction.

4.19.4 Other details: The specifications for painting (General) as mentioned here-in before shall hold good as for as they are applicable.

4.20.0 FRENCH SPIRIT POLISHING: (ON NEW WORK WITH A COAT OF WOOD FILLER):

4.20.1 Polish: Pure shellac varying from pale orange to lemon yellow colour, free from resin or dirt shall be dissolved in methylated spirit at the rate of 140 gm. of shellac to 1 litre of spirit. Suitable pigment shall be added to get the required shade.

4.20.2 Preparation of surface: The surface shall be cleaned. All unevenness shall be rubbed down smooth with sand paper and well dusted off. Knots if visible shall be covered with a preparation of red lead and glue size laid on while hot. Holes and indentations on the surface shall be stopped with glaziers putty. The surface shall then be given a coat of wood filler made by mixing whiting (ground chalk) in methylated spirit at the rate of 13 kg. of whiting per litre of spirit. The surface shall again be rubbed down perfectly smooth with glass paper and wiped clean.

© 2022 MECON Limited All rights reserved

4.20.3 Application: The number of coats of polish to be applied shall be as described in the item.

A pad of woolen cloth covered by fine cloth shall be used to apply the polish. The pad shall be moistened with the polish and rubbed hard on the wood, in a series of overlapping circles applying the mixture sparingly but uniformly over the entire area to give an even level surface. A trace of linseed oil on the face of the pad facilitates this operation. The surface shall be allowed to dry and the remaining coats applied in the same way. To finish off, the pad shall be covered with a fresh piece of clean fine cotton cloth, slightly damped with methylated spirit and rubbed lightly and quickly with circular motions. The finished surface shall have a uniform texture and high gloss.

4.20.4 Measurement, Rate and other Details: These shall be as for Painting (General) mentioned here-in-before as far as they are applicable.

4.21.0 RESIN BASED THERMO PLASTIC PAINT (DECORATIVE AND PROTECTIVE FINISH):

4.21.1 Materials: Resin based thermo plastic paint of approved manufacture, colour and shade shall only be used.

4.21.2 Preparation of Surface & General: The Specifications for Painting (General) described here in before shall hold good as for as they are applicable.

4.21.3 Protective Coatings: On surfaces such as ferrous metals, brass, copper and phosphor bronze, a protective coating of suitable bituminous compound or chromated red oxide should be given. New wood should be treated with a leafing grade aluminium primer or water based acrylic emulsion primer.

The surfaces with algae growth shall be thoroughly cleaned down to remove as much growth as possible and effective solution of stabilized house hold bleach (calcium hypochloride) of approved quality with approximate 35% chlorinecontent @ 2 kgs. Per 50 ltrs. (or as per manufacturers recommendations) should be used to treat the surfaces.

On chalky or friable surfaces, after removing the loose materials by stiff brushing or scraping, the surface should be treated with one coat of advanced solvent based material such as snowsol stabilizing solution or other approved equivalent with white spirit.

4.21.4 Application: The ready mix resin based thermo plastic paint shall be applied on clean and wetted surfaces by means of brushes or roller. The solution shall be kept well stirred during the period of application. To avoid direct heat of the sun, the paint shall be applied on the side in shade.

© 2022 MECON Limited All rights reserved

On rough and textured surfaces, one under coat of cement based paint shall be applied before application of undiluted Sandtex Matt finish coat. In case of application of two coats of Sandtex Matt at normal temperatures, the first one shall be diluted by addition of 25% water and the second coat direct. In extremely hot environs, the second coat shall be diluted @ 2.5 ltrs. of water to 20 ltrs, of paint or as directed.

Painting with resin based thermo plastic paint shall be carried out generally as per manufacturer's specifications.

4.21.5 Other Details: The specification for Painting (general) mentioned here-in-before shall hold good as far as they are applicable. Snowsol stabilized solution shall not be applied over bitumen. Snowsol stabilized solution treated surfaces shall not be left unpainted for more than 2 (two) days. Gypsum based materials shall not be used for filling of exterior cracks while preparation of surfaces.

4.21.6 Mode of Measurement: The painting unless otherwise mentioned shall be measured by area in sqm. up to two places of decimal. Length and breadth shall be measured correct up to two places of decimal of a meter. Deduction will be made from the areas of fixtures, grills, ventilation, outlets individually more than 0.5 sqm.

The item shall include removing nails, making good holes, cracks, patches etc. not exceeding 0.1 sqm. each with materials similar in composition to the surface to be prepared.

4.21.7 Rate: The rate shall include the cost of all materials and labour involved in all the operations described above.

4.22 CONSUMPTION OF PAINT FOR DIFFERENT PAINTING ITEMS:

Sr.	Brief Description of painting work	Consumption per 10 sqm of net area
1	Oil Bound Distemper on plastered surfaces:	
	a) Cement Primer (one coat).	0.91 litres.
	b) Two finishing coats.	1.60 kg.
	c) Three finishing coats.	2.40 kg.
2.	Flat oil paint to plastered surfaces:	
	a) Cement primer (one coat).	0.91 ltr.

© 2022 MECON Limited All rights reserved

	b)_Cement_primer (two coats).	1.82 ltrs.
	c) Two finishing coats.	1.72 ltrs.
3.	Acrylic Emulsion Paint:	
	a) Cement primer (one coat).	0.91 ltr.
	b) Two finishing coats	0.87 ltr.
	c)Three finishing coats.	1.30 ltrs
4.	Cement Paint (old surfaces):	
	a)Two coats on sand faced plastered surface.	4.10 kg.
	b)Two coats on rough cast plastered surface.	7.70 kg.
5.	Cement Paint (New surfaces).	
	a)Two coats on sand faced plastered surface.	4.50 kg.
	b)Two coats on rough cast plastered surfaces.	8.50 kg
	Enamel Paint to wood/steel:	
	a) Wood primer (one coat.)	0.90 ltr.
	b) Steel primer (one coat.)	0.75 ltr.
	c)Two finishing coats on wood.	1.40 ltrs.
	d)Two finishing coats on steel.	1.35 ltrs.
7.	Flat Oil Paint to wood/steel work.	
	a)Wood primer (one coat.)	0.90 ltr.
	b)Steel primer (one coat.)	0.75 ltr.
	c)Two finishing coats on wood.	1.70 ltrs.
	d)Two finishing coats on steel.	1.70 ltrs.
8.	External Painting with flat oil paint:	
	a)Cement primer (one coat.)	1.00 ltr.

© 2022 MECON Limited All rights reserved

	b)Two finishing coats.	1.74 ltrs.
9.	Repainting old painted surfaces.	
	a) Two coats of emulsion paint.	0.86 ltr.
	b) Two coats of flat oil paint.	1.59 ltrs.
	c) Two coats of enamel paint.	1.35 ltrs.

4.23.0 COVERAGE PER SQM ACHIEVED PER LITRE PAINT:

(Note: Coverage per Kg is mentioned with respective item)

Sr. No.	Name of Paint	Area coverage for one coat (Old work)	Area coverage for two coats (New work)	Area coverage Per addl. coat
1	Synthetic enamel paint	14m^2	8.5m^2	18m^2
2	Plastic emulsion paint	14m^2	&5m^2	18m^2
3	Oil Bound distemper	10m^2	6.0m^2	12rn^2
4	Dry distemper	10m^2 per kg	6.5m^2 per kg	12m^2 per kg
5	Cement based paint	4.5 mL per kg	2 m^2 per kg	6 m^2 per kg
6	Aluminium paint	20 m^2	12.5 m^2	28 m^2
7	Bitumen paint / Black Japan	14 m^2	14 m^2	28 m^2
8	Neeru (or lime punning with slacked lime) over plaster	0.5 m^2 per kg of slacked lime		
9	Red oxide metal primer	16 m^2		
10	cement primer	12 m^2		
11	Wood primer	13 m^2		
12	Wax polishing of new wood work with ready made polish	20 m^2 per kg	20 m^2 per kg	20 m^2 per kg

© 2022 MECON Limited All rights reserved

13	French or spirit polish	10.5 m^2		
14	Varnish	14 m^2	8.5 m^2	18 m^2
15	Exterior Emulsion Paint		8 m^2 for first coat / Kg and 10 m^2 for second coat	
16	Requirement of paint per coat in Structural steel work on tonnage basis. Truss and Lattice girder work - 43 litres per tonne. Plane Beam/plane girder work - 2.5 litres per tonne			

5.0 SPECIFICATION FOR FALSE CEILING

5.1.0 SCOPE OF WORK

5.1.1 The work contemplated under these specifications refers to false ceiling with gypsum board.

5.2.0 GENERAL

5.2.1 The work under false ceiling work is to be executed by specialized agency with adequate experience.

5.2.2 The work shall be executed in accordance with the false ceiling drawings. In the absence of false ceiling drawings the work shall be executed as directed by the Consultant considering the location and requirements of the light fittings, grills, erection openings, etc.

5.2.3 The scheme of suspenders and direction of intermediate channel shall be planned in such a way that they clear the ducting, cable trays, etc. and got approved by the consultant.

5.2.4 Contractor's scope of work shall include marking of light fitting location, Ac grills or Trap doors and obtaining approval of Consultant. This shall be done before cutting for openings. No extra shall be payable for re-aligning the same.

5.3.0 CODES AND STANDARDS:

The relevant Indian Code for False ceiling works is given below:

IS 2095 (Part – I)	1996	Specification for Gypsum Plaster Boards- Plain

© 2022 MECON Limited All rights reserved

		gypsum plaster boards
IS 2095 (Part – II)	2001	Specification for Gypsum Plaster Boards- coated or laminated gypsum plaster boards
IS 2095 (Part – III)	1996	Specification for Gypsum Plaster Boards- reinforced gypsum plaster boards

5.4.0 SEAMLESS SUSPENDED CEILING

5.4.1 The suspended false ceiling system shall made from suspender channels, intermediate channels and ceiling channels. All the framework shall be from standard available GI sheet sections.

5.4.2 The suspender shall be of angle 25 mm x 10 mm x 0.55 mm thickness fixed to the ceiling at 1220 mm grid points using GI cleat and steel expansion fasteners.

5.4.3 Intermediate channels shall be of 45 mm channel, 0.9 mm thick with two flanges of 15 mm each. The intermediate channel shall be screwed to the suspenders.

5.4.4 Ceiling section shall be of 0.55 mm thickness curled web channel with web of 51.5 mm and two flanges of 26 mm each, with lips of 10.5 mm. The ceiling channel is fixed to the intermediate channel at 457 mm centers with the help of connecting clips.

5.4.5 12.5 mm tapered edge MR Gypsum board (conforming to IS 2095 is then screw fixed to ceiling section with 25 mm drywall screws at 230mm centers. Screw fixing is done mechanically either with screw driver or drilling machine with suitable attachment.

5.4.6 The edge of the ceiling near the walls or partion shall be screwed to GI perimeter channels. The perimeter channels shall be 0.55mm thick with 27 mm web, one flange of 27mm and another flange of 30 mm. The perimeter channel shall be fixed to wall or partition with the help of nylon sleeves and screws at 610mm centers.

5.4.7 Finally the boards are to be jointed and finished so as to have a flush look which includes filling and finishing the tapered and squared edges of the boards with jointing compound. Joint paper tape and two coats of drywall topcoat suitable for Gypsum board as per recommended practices by the manufacturer.

5.4.8 The direction of Intermediate channels shall be preferably in the shorter direction of the room. The openings required for light fittings, diffusers, cutouts etc., shall be accommodated between the intermediate channels.

© 2022 MECON Limited All rights reserved

The edges of openings shall be stiffened using perimeter channels of 20mm x 27mm x 30mm x 0.55 mm screwed to the intermediate channels.

5.4.9 Where steps are specified by Consultant, angle beads shall be used to get straight line finish. Additional suspenders/ intermediate channels/ ceiling channels shall be provided to maintain the stiffness of the suspended ceiling at steps.

5.4.10 Edge beads shall be used to protect the exposed gypsum core of Gypsum board at the cut edges of openings for light fittings, diffusers, etc. The exact size of the openings to be provided shall be directly taken from the type of light fitting of AC grills with due allowance for edge clearance available in such fittings as directed by Consultant.

5.4.11 In cases where the ceilings are longer than 10m control joints shall be provided. The location of such joints shall be as directed by consultant.

5.5.0 Suspended precoated GI Grid System:

5.5.1 The grid system shall be precoated GI system from approved manufacturer. The suspended ceiling grid shall be of self interlocking precoated GI, T bars main runners and cross runners of specified section and pattern as required to suit the span as per drawing.

5.5.2 Gypsum tiles: The tiles shall be of 12.5 mm thickness either plain in design or perforated tile as specified in the drawings.

The Gypsum tile used shall be of size approximately 595 x 595 mm size or as specified in the schedule of items. The tile shall be provided with PVC edge channel to protect the edges of the tiles. The tiles shall be placed on the soffit of precoated GI insection Tees and screwed using GI screws.

5.5.3 Openings for light fittings, AC grills and trap doors if any, shall be stiffened with tees / L-angles used for perimeter sections.

5.5.4 Acceptance criteria:

5.5.4.1 The false ceiling shall be checked for level and lines in both direction and diagonally.

5.5.4.2 The alignment of light fittings and AC grills and Trap doors shall be approved by Consultant.

5.5.5 Mode of Measurement:

5.5.5.1 The false ceiling provided shall be measured in square metres.

5.6.0 METAL FALSE CEILING SYSTEM & THERMAL INSULATION METAL FALSE CEILING SYSTEM:

© 2022 MECON Limited All rights reserved

5.6.1 MATERIALS

5.6.1.1 False ceiling: Metal False Ceiling

5.6.1.2 PRODUCT: as per the approved make list.

5.6.1.3 COLOUR: As specified or as approved by the Engineer-in-Charge

Material Description: All components shall be made of aluminium as per manufacturers specification.

5.6.2 METAL CEILING:

5.6.2.1 PANEL: The panel shall be cold roll formed panels 300mm wide and 15.5mm deep with a 5mm beveled edge creating an 8mm V groove made from corrosion resistant Al.-Mg. Alloy AA5050. The length of each panel shall be upto 6000mm. The aluminium panels shall be chromatised for maximum bond between metal and paint enameled twice under high temperature, one side with a full primer and finish coat in a polyester paint for a dry film thickness of 20 microns, the other side (inner side) with a primer coating and skin coat on a Continuous Paint Line.

5.6.2.2 CARRIER: The carrier on which the panels shall be clipped on to will be 41.5mm wide, 62mm deep, made of black stove enameled 0.95mm thick aluminium alloy AA5050. When two or more carriers are to be joined, they shall be joined together by means of splices, which will clip on to holes provided for the same.

5.6.2.3 WALL TRIM: The wall trim shall be 15mm deep x 30mm wide x 15mm deep x 0.4mm thick with inward right angled bent lip of 2mm thick Aluminium Alloy AA5050 with square edges and length of 5 mtr.

5.6.2.4 ROD HANGER: The rod hanger of suitable length shall be made of 4mm dia. galvanized steel (Zinc coating 120 gms/Sqm.).

5.6.2.5 SUSPENSION CLIP: The adjustment suspension clip shall be made of galvanized spring steel V shaped with two holes to accommodate the rod hanger.

5.6.2.6 ANCHOR FASTNERS: The single piece sleeve anchor with assembled hanger taper bolt and nut which has smaller driller dia. Anchor fastener shall be of arrow make or equivalent with thread size 5mm.

5.6.2.7 SUSPENSION SYSTEM: The carriers would be suspended from the roof by 4mm dia galvanized (Zinc coating 120 gms/Sqm.) steel wire rod hangers with height adjustment springs out of galvanized spring steel. Hangers shall be fixed to roof by ‘3’ hooks and Anchor Fasteners.

© 2022 MECON Limited All rights reserved

5.6.2.8 FINISHING OF SURFACE OF STRIPS FOR INTERNAL USE (ALUMINIUM):

The coils from which aluminium panels are made shall be cold roll formed & stove enameled on a continuous coil coating paint line with dried in place roller coated application for pre-treatment. The coils to go through four stages of pre-treatment, three times oven baked through conversion coating, priming and finished coat, ensuring superior adhesion, high corrosion resistance and good colour retention. The coils shall be painted on both sides after being degreased, Prime coat of at least 5 microns to be applied on both sides and a back coat of 5 micron of neutral colour to be applied on the inside surface and 5 micron of binder and 15 microns of top coat of desired colour shall be additionally provided on the exposed surface.

Pencil Hardness	:	phh > F
Light Fastness	:	Light fastness of at least 6 according to international wool scale.
Colour Fastness	:	All finishes shall have a colour fastness of at least 6.
Colour Variation	:	Colour diff. Bet batches ± 4 units Colour diff. Within one batch + 2 units.
Colour Uniformity	:	Maximum allowable deviation is 2 NBS units.
Specular Gloss	:	U 10 deg/00 (matt) ; 0 25 deg/00 (satin)
Resistance to Salt Spray Test	:	After 100 hrs testing under creep from the edges or the Cross, shall exceed 2mm. Blistering shall not exceed F 8.
Impact resistance	:	To withstand an impact test of 5mN/mm metal thickness Without loss of adhesion
Paint adhesion	:	Better than or equal rating 1
Humidity Resistance	:	No formation of blister.
Chemical Resistance	:	No loss of adhesion or gloss and no colour change or Staining.

5.6.2.9 FIXING: The panels shall be clipped on to a carrier. The carriers to be suspended with an adjustment spring of galvanised spring steel, V shaped with two holes to accommodate the rod hanger. The rod hanger to be made

© 2022 MECON Limited All rights reserved

of 4mm dia, galvanised steel and suspended form the ceiling by) hooks fixed at 1.5mm centre to centre.

5.6.2.10 WORKMANSHIP: The ceiling shall be erected in continuous sequence. Spans would not exceed those recommended by the manufacturer. All work in this section shall be performed in an efficient manner by the installing agency approved by the manufacturers and as per manufacturer's recommended procedures.

5.6.2.11 FIRE RESISTANCE: The false ceiling including the paint shall be fire resistant as per DIN 4102.Class A2. It should also be classified as P-NOT EASILY IGNITABLE - AS PER B5 476. Part 6 and should have a fire propagation classification of Class as per BS 476. Part 6.

5.6.3.0 THERMAL INSULATION:

5.6.3.1 UNDERDECK INSULATION:

5.6.3.1.1 METHOD OF APPLICATION:

5.6.3.1.2 Clean the surface and make it free from dust and loose particles.

5.6.3.1.3 Apply a coat of Shalicoat to the underside of the roof.

5.6.3.1.4 Apply CPRX compound to the underside of each prelaminated Phenolic Foam panel and press the slabs in position. Butt the joints well together.

5.6.3.1.5 Secure panel in position with the help of screws, rawl plug and washers.

5.6.3.1.6 Deal all the joints with the help of self adhesives Aluminium tapes.

5.6.4 INSULATION ABOVE FALSE CEILING:

5.6.4.1 The insulation tiles shall be placed above the Al carriers, which are at one meter c/c.

5.6.4.2 The insulation tiles should be cut to the required size for placement over carriers as per the spacing and pattern of false ceiling lay out.

5.6.4.3 The rate quoted shall be inclusive of cutting to the required size, wastage etc.

5.6.4.4 The tiles shall abut each other to provide a continuous barrier for effective thermal insulation.

5.6.5 GENERAL:

5.6.5.1 Extremely low 'K' value 0.018 Kcal/hr M.C.

© 2022 MECON Limited All rights reserved

5.6.5.2 Low water vapour transmission level.

5.6.5.3 Should be available in a single component system.

5.6.5.4 Should be approved by both TAC and NIC.

5.6.5.5 Should be mildly antiseptic with resistance to fungal and bacterial growth and should not attract rodents/insects.

5.6.5.6 Should have good acoustic properties.

5.6.5.7 Temperature Range: + 125 degrees C to - 190 degrees C.

5.6.5.8 Material shall be classified as P [not easily ignitable] - BS 476 Part 5.

5.6.5.9 Material should conform to Building Classification "0 based on the propagation index BS 476 Part 6.

5.6.5.10 Material shall have a Class I surface spread of flame, the highest rating possible BS 476 Part 7.

5.6.5.11 Lowest smoke obscuration 5% (almost negligible) - BS 5111 Part 1.

5.6.5.12 Toxicity index of 0,04478 - Naval Engineering Standards 713 (NES) Ministry.

5.6.7 PLAIN UNPERFORATED CLIP-IN TYPE ALUMINIUM FALSE CEILING (600MM X 600MM X 0.7MM)

5.6.7.1 Tiles: This shall be bevelled edged and two sides of each tile shall be raised and pipped and stopped to ensure positive engagement into the clip-in profile to aloow for demounting of individual tiles. The paint finish shallconsist of 70 micron thick (50% gloss) plyester based powder coat of white colour. The suspension system shall be as detailed below.

Clip-in Suspension system:

This shall be made out of GI with a thickness of 0.5mm which will be suspended by means of suspension rods made out of 4mm GI rods with a hold on clamp suspension clip. Clip-in profile should be suspended at every 600mm. Suspension system along clipin lines shall be at 1200mm maximum.

5.6.7.2 EXECUTION

5.6.7.2.1 EXAMINATION

A. Examine areas receiving metal tile ceiling system for conditions that might adversely affect installation.

© 2022 MECON Limited All rights reserved

B. Verify that all work above ceiling system has been satisfactorily completed prior to start of ceiling installations.

C. Do not start ceiling installations until all unsatisfactory conditions affecting ceiling systems have been corrected.

5.6.7.2.2 PREPARATION

A. Provide layouts for inserts, clips and other support items required to be installed by other trades. Furnish inserts, clips and related items to other trades in a timely manner to preclude construction delays.

B. Coordinate with other trades for proper installation of inserts and related items.

C. Verify ceiling layouts by actual field measurements.

D. Establish ceiling layout to balance borders and minimize out-of-square conditions. Coordinate all work that penetrates tile.

5.6.7.2.3 INSTALLATION

A. Install metal tile system in accordance with manufacturer's printed installation instructions, submittals, applicable industry standards, and governing regulatory requirements for the work.

5.6.7.2.4 ADJUST AND CLEAN

A. Adjust components to provide uniform tolerances.

B. Replace all tile that are scratched, dented or otherwise damaged.

C. Clean exposed surfaces with non-solvent, non-abrasive commercial type cleaner.

5.6.7.2.4 Mode of Measurement: Unit of measurement shall be in square metres.

6.0 VOID

7.0 DOOR. WINDOWS & PARTITION

7.1 PARTITION

7.1.1 Fire rated partition

The board shall be required to be Non-combustible, according to BS 476: Part 4 or As 1530: Part 1 and shall have surface spread of flame: Class 1 to BS 476: Part 7 or AS1530: Part 3. The classification as per the building

© 2022 MECON Limited All rights reserved

regulations shall be class0. Other properties of the board shall suffice to an Alkalinity of (approx)pH9, Thermal conductivity (approx) at 400C of 0.321W/mOk, a nominal Moisture content around 2%.

Fixing of Promat make 2hrs fire rated fully insulated fire resistant partition consist of 2nos, 20mm PROMATECT®-50 mineral bound magnesia board, with Steel Studs 70mm deep x 0.5 mm thick and ceilings and floor perimeter steel channel 70mm deepx0.5mm deep. Each 20mm PROMATECT®-50 board will be placed on one side of the framing. The vertical stud will be placed at 610mm centre to centre. The board will be fixed to the vertical stud with M4 self tapping screws at 200mm centres. The perimeter channel will be fixed to the associated construction using M6 steel anchor bolt at 500mm centres. The butt joints of the boards shall have screws in alternate positions every 200mm. Considering the board width the spacing shall be done at 610mm. Promat Board shall have a nominal Density of 1200kg/m3, and shall be resistant to vermin, mould growth, minor impact, abrasion and short term water attack. The board shall be off-white in colour with a smooth surface suitable to receive most forms of decoration.

7.1.2 DOUBLE SKINNED GYPSUM PARTITIONS

Dry wall Partitions:

Frame work:-

GI frame which includes 48mm studs (0.50mm thick having one flange of 34 mm and another flange of 36 mm made of completely ribbed GI steel) placed at 610mm /400mm/ 300mm centre to centre vertically (please refer the table below for maximum heights of partitions), in 50mm thick GI floor and ceiling channel (0.50mm thick having equal flanges of 32mm made of completely ribbed GI steel). Rate shall be also inclusive of 48mm GI studs horizontal @ skirting level, 1200mm and 2400mm level (or door lintel leve) from floor level reinforced with seasoned salwood. The rate to include Gypsteel(R) fixing channel of 99mm width (0.9mm thick having two flanges of 9.5mm each) has to be provided at the horizontal joints of the two boards. The GI framework to be continued right up to the True ceiling. All GI sections used in the partition frame should confirm to IS 277-1992 and should have galvanization 120 GSM both side included (9 microns each side thickness), with tolerance of sections conforming to IS 1852-1987. The cost to also include necessary strengthening of GI frames to take the additional load of ply panelling at locations as shown in the drawings.

GI frame which includes 70mm GI boxed Acoustud (0.50mm thick having one flange of 41 mm and another flange of 44 mm made of completely ribbed GI steel) placed at 610mm centre to centre vertically, in 72mm thick GI floor and ceiling channel (0.50mm thick having equal flanges of 32mm made of completely ribbed GI steel). Rate shall be also inclusive of 70mm

© 2022 MECON Limited All rights reserved

GI single Acoustud horizontal @ skirting level, 1200mm and 2400mm level (or door lintel level) from floor level reinforced with seasoned salwood. The rate to include GI fixing channel of 99mm width (0.9mm thick having two flanges of 9.5mm each) has to be provided at the horizontal joints of the two boards. The GI framework to be continued right up to the True ceiling. All GI sections used in the partition frame should confirm to IS 277-1992 and should have galvanization 120 GSM both side included (9 microns each side thickness), with tolerance of sections conforming to IS 1852-1987

The following table gives an approximate relationship between the thickness of the partition and the floor to floor height

Sl. N	**Gyp Wall System**	**Thick-ness (mm)**	**Max Height (mm) at different stud centres**		
			600mm	**600mm boxed**	**400mm**
1	GypWall 75mm thick Single skin	75	2500	2800	2900
2	GypWall 75mm thick Single skin with insulation	75	2500	2800	2900
3	GypWall 100mm thick Double skin	100	3600	3800	3800
4	GypWall 100mm thick Double skin with insulation	100	3600	3800	3800
5	GypWall 122mm thick double skin with AcouStuds	122	4600	4800	4900
6	GypWall Fire Resist 100mm thick	100	3600	3800	3800
7	GypWall Fire Resist 100mm thick with insulation	100	3600	3800	3800
8	GypWall Fire Resist 122mm thick with Acoustuds and double skin	122	4600	4800	4900
9	GypWall Fire Resist 122mm thick with Acoustuds and double skin with insulation	122	4600	4800	4900
	GypWall Fire Resist 132mm thick with Acoustuds and double skin	132	4900	5100	5100
11	GypWall Fire Resist 132mm thick with Acoustuds and double skin with double skin	132	4900	5100	5100

© 2022 MECON Limited All rights reserved

Sl. No	GypWall System	Thick-ness (mm)	Max Height (mm) at different stud centres		
			400mm boxed	300mm	300mm boxed
1	GypWall 75mm thick Single skin	75	3200	3100	3500
2	GypWall 75mm thick Single skin with insulation	75	3200	3100	3500
3	GypWall 100mm thick Double skin	100	4000	4000	4200
4	GypWall 100mm thick Double skin with insulation	100	4000	4000	4200
5	GypWall 122mm thick double skin with AcouStuds	122	5100	5100	5400
6	GypWall Fire Resist 100mm thick	100	4000	4000	4200
7	GypWall Fire Resist 100mm thick with insulation	100	4000	4000	4200
8	GypWall Fire Resist 122mm thick with Acoustuds and double skin	122	5100	5100	5400
9	GypWall Fire Resist 122mm thick with Acoustuds and double skin with insulation	122	5100	5100	5400
10	GypWall Fire Resist 132mm thick with Acoustuds and double skin	132	5300	5300	5600
11	GypWall Fire Resist 132mm thick with Acoustuds and double skin with double skin	132	5300	5300	5600

Sl.No	GypWall System	Thick -ness (mm)	Acoustics (Rw)	Fire Rating (Mins)	Duty Rating
1	GypWall 75mm thick Single skin	75	34	30	Medium

© 2022 MECON Limited All rights reserved

2	GypWall 75mm thick Single skin with insulation	75	40	30	Medium
3	GypWall 100mm thick Double skin	100	42	60	Heavy
4	GypWall 100mm thick Double skin with insulation	100	49	60	Heavy
5	GypWall 122mm thick double skin with AcouStuds	122	47	60	Heavy
6	GypWall Fire Resist 100mm thick	100	42	90	Severe
7	GypWall Fire Resist 100mm thick with insulation	100	49	90	Severe
8	GypWall Fire Resist 122mm thick with Acoustuds and double skin	122	49	90	Severe
9	GypWall Fire Resist 122mm thick with Acoustuds and double skin with insulation	122	54	90	Severe
10	GypWall Fire Resist 132mm thick with Acoustuds and double skin	132	46	120	Severe
11	GypWall Fire Resist 132mm thick with Acoustuds and double skin with double skin	132	50	120	Severe

First skin on either side of frame work:-

Can be either First Skin of partition which includes tapered edge 12.5mm thick Gypboard oy Ply/Mdf (conforming to IS 2095-1982 and 2542-1981)

© 2022 MECON Limited All rights reserved

screw fixed with Gypsteel (or equivalent make) drywall screws of 25mm at 300mm center to either side of existing framework studs. Necessary cut-outs shall be provided for taking of supply and return air ducts/openings which shall be neatly finished with PU sealant of approved make after fixing of ducts thereby leaving no gaps. The layer should be finished so as to take on second skin in Gypsum/Ply/MDF directly. Above false ceiling partition both skin of The Gypboard to be carried right up to the true ceiling. Mode of measurement to be Running length of the Partition of any one side into the height

OR

First Skin of partition can also be which includes tapered edge 12.5mm thick Gyproc (MR) grade (conforming to BS 1230 part 1) screw fixed with approved drywall screws of 25mm at 300mm centers to each side of existing framework studs. Necessary cut-outs shall be provided for switches which shall be neatly finished with PU sealant of approved make after fixing of the same thereby leaving no gaps. Finally square and tapered edges of the boards are to be jointed and finished so as to have a flush look which includes filling and finishing with Gyproc Jointing compound, Gyproc Joint Paper tape and two coats of Drywall Top Coat (as per recommended practices of manufacturer) or equivalent. Ceramic tiles up to 32kg/sqms and 12.5mm can be fixed using suitable adhesive. Water proofing & sealants manufactured by others shall be applied as per the manufacturers' recommendations. Mode of measurement to be Running length of the Partition of any one side into the height with door deductions

Insulation:-

Glass wool insulation of density 24/32/48 kg per cum as per BOQ, 50mm thick of approved make should be wrapped in RP Tissues as per manufacturer's specifications, and is to be used as insulation. Glass wool used should be chemically inert. Application should not cause or accelerate corrosion. It should be non-combustible in accordance with BS 476 Part 4, 1970 The Glass wool should be rot proof and odorless. The Moisture Content should be less than 2% in accordance with BS 2972. The water Absorption should be less than 2% in accordance with BS 2972

Second Skin: -The second skin can be either Gypsum Board or Ply/MDF.

Gypboard:- Second Skin of Partition which includes tapered edge 12.5mm thick Gypboard (conforming to IS 2095-1982 and 2542-1981) screw fixed with 35mm dry wall screw at 300mm c/c to Existing first skin of Partition. Care should be taken that the joint should be staggered to avoid leakage. Finally square and tapered edges of the boards are to be jointed and finished so as to have a flush look which includes filling and finishing with Jointing compound, Joint Paper tape and two coats of Drywall Top Coat (as per recommended practices of Saint- Gobain India Gypsum or equivalent). All

© 2022 MECON Limited All rights reserved

the perimeters and penetration through the partition should be fire stopped using suitable in tumescent fire sealant. Angle bead has to be used at the external angles to get straight line and finish and protection from impacts. Edge bead has to be used to protect the exposed edges of Gypboard.

The second layer of Gypsum shall be stopped 150mm above false ceiling in that area. The partition should be finished so as to take on wall paper/paint directly by applying suitable base coats, prime coats, etc. complete. Necessary cut-outs shall be provided wherever required which shall be neatly finished with PU sealant of approved make after the intended work is complete thereby leaving no gaps.

Ply: - Which includes 12mm/8mm thick commercial ply screw fixed with wooden screws to Existing first skin of Partition. Care should be taken that the joint should be staggered to avoid leakage. The ply to be pasted with approved shade and sample 1/1.5mm thick laminate/4mm thick veneer (As per BOQ). The junction between the ply panel and Gypboard is to be finished with SS/Aluminum grooves/hat sections as shown in the Drawings or mentioned in the BOQ. This second skin of plywood shall be stopped 75mm above false ceiling in that area. Necessary cut-outs shall be provided wherever required which shall be neatly finished with PU sealant of approved make after the intended work is complete thereby leaving no gaps. MODE OF MEASUREMENT TO BE ACTUAL PLY AREA ON BOTH SIDES.

Skirting: -should be75mmhigh consisting of 12mm/8mm thick commercial plywood backing fixed to Gypsum backing and finished in 1/1.5mm thick approved shade laminate/4mm thick veneer. The skirting to be flushed to surface of wall / partitions in line and level and 4mm wide groove to be made in the wall/ partition at the junction and inclusive of SS/Aluminum (as per drawings) inserted between the groove formed. The strip to be glued to the surface with approved make instant glue. In case we have stone/tile flooring the same to be used. The stone/tile to be stuck to ply by means of approved adhesive.

7.2 MODULAR GLASS PARTITION

All Frame works to be of manufacturer's specifications in Aluminium. The Glass used should be 10mm/12mm thick clear toughened glass of approved make. Fixing details for Glass Partition should be as per the manufacturer's specifications. Measurements includes the door frame area with removed door area. Rates for Partition should include all glass as per BOQ, clear acoustic sealant to seal the glass to glass joints. The rate should also include the Partition above false ceiling which will be single skinned Gypsum Partition with glass wool insulation, 24 kg per cum, 50mm thick all as per the drawings and Bill of Quantity. Necessary cut-outs shall be provided for

© 2022 MECON Limited All rights reserved

taking of supply and return air ducts/openings which shall be neatly finished after fixing of ducts thereby leaving no gaps.

Glass Partitions On Patch Fittings

All Patch fittings to be of approved make in Brushed finish Stainless Steel. The top, bottom patch, over head, corner lock etc. shall all be as per manufacturer's recommendations. Rates for Partition should include all patches required, glass as per BOQ, clear acoustic sealant to seal the glass to glass joints. The rate should also include the Partition above false ceiling which will be double skinned Gypsum Partition with glass wool insulation, 24/32/48 kg per cum, 50mm thick all as per the drawings and Bill of Quantity. Necessary cut-outs shall be provided for taking of supply and return air ducts/openings which shall be neatly finished after fixing of ducts thereby leaving no gaps.

7.3 ACOUSTICAL PANELLING

The acoustic boards to be used for paneling should be of approved make. They shall be cladded with fabric. The installation work of this Section shall be performed by an authorized applicator, licensed by the manufacturer. Install materials in accordance with manufacturer's instructions, and comply with governing regulations, fire resistance rating requirements, as indicated, and industry standards applicable to the work. The technical details for the board to be as per the following

Tech Primer		
No	Description	Materials Specifications
1	Thickness (mm)	As per BOQ
2	Size (mm)	Width 600 / Length up to 2400
3	Core	Sound Smooth / SoundSynth
4	Nominal Density (Kg/m3)	400 to 500
5	Weight (Kg/m2)	up to 25
6	Edge	Square with long edges Kerfed
7	NRC / STC	Up to 0.9
8	Fire	Class I
9	Moisture Resistance (%)	RH 90

© 2022 MECON Limited All rights reserved

10	Light Reflectance (%)	As per manufacturer's specifications
11	Warranty	10 years
12	Installation	As per manufacturer's specifications
13	Colour	As per Architect's sample
14	Maintenance	As per manufacturer's specifications

7.3.1 Fabric

Fabric should be non-woven, needle-punched, chemically-free, thermally-bonded, multi-purpose acoustical fabric which is highly durable with exceptional performance and has been specially developed for the Acoustic panels.

The following are the specifications for the fabric

• 100% polyester

• Safe, non-toxic

• Recyclable, environmentally-friendly

• UV stable - resistant to fading

• Moisture-resistant - rot-resistant, stain resistant

• Durable - infinite product life

• Does not fray or zipper when cut

• Density 400 gsm

7.3.2 Panelling And Boxing

Frame work: -The timber shall be planed smooth and accurate to the full dimensions, rebates, rounding, mouldings, as shown in drawings, before assembly. Grounds shall be provided where so specified. These shall consist of second class T.W. or any other wood as mentioned in the BOQ, with dimensions as per BOQ, fixed over the wall, with 50mm long wood screws. The rate should include a coating of anti-termite solution on all unexposed surfaces of wooden frame work.

© 2022 MECON Limited All rights reserved

7.3.3 Plywood paneling/Boxing:

The thickness of the panel shall be as per the BOQ. The plywood panels to be finished in approved make and shade 1/1.5mm thick laminate or 4mm thick veneer with grains running along the longer dimensions of the panel. The finished work must be within a tolerance of ± 1 mm in thickness may be accepted. When made from more than one piece, the pieces shall be joined with a continuous tongue and groove joint glued together. The junction with dis-similar materials should have either a stainless steel or Aluminum Patti as per drawings. All veneer to be melamine polished in at least 3 coats. The dimensions mentioned in the drawings should be followed. Any other materials like plywood, particle board, asbestos sheeting, etc. may also be fixed over framework on walls, as shown in drawings, including necessary grooves, etc.

Measurements:

Length and breadth shall be measured correct to cm. Wall paneling such as T.W. paneling, block board, plain lining, plain skirting each shall be measured separately in square meter nearest to two places of decimal. The molded work shall be measured in running length. ONLY SEEN AREA IS TO BE PAID. ANY PART WHICH IS HIDDEN IN THE BOXING WILL NOT BE MEASURED AND PAID. The rate shall include the cost of materials and labor required for all the operations described above.

7.4 DOORS & WINDOWS

Aluminium glazed door

Glazed anodized Aluminium door with Aluminium frame of Hindalco(Alupuram)/Jindal or similar approved sections.

Rolling Shutter as required to be provided as per IS code and steel door with steel frame with anti-corrosive paint as required.

12 mm thick toughened glass with etching shall be considered with top and bottom aluminium frame only and rolling grill should also be considered for the entrance door.

All windows shall be sliding/ louvered glazed anodized aluminium window of Hindalco (Alupuram)/ Jindalk or approved equivalent make to be provided.

Glazed anodized aluminum (minimum 15 micron thickness) door, widow, partition shall be used (as per schedule of enclosed section no.). Aluminium sections used for fixed/openable windows, ventilators, partitions, frame work & doors etc. shall be suitable for use to meet Architectural designs to

© 2022 MECON Limited All rights reserved

relevant works and shall be subject to approval of the Engineer-in-Charge for technical, structural, functional and visual considerations.

Standard aluminium section

Sl. No.	Description		Size	Weight Kg/mtr.
I.	**DOORS**			
	A.	**Normal Door**		
	1.	Door Vertical Plain	85x44.5x2	1.365
	2.	Door Vertical	-do-	1.412
	3.	Door Bottom (for upto 1 mtr. Shutter Width)	101.1x44.5x3.1	2.379
	4.	Door Bottom (for more than 1 mtr. Shutter Width)	180x44.5x3.18	3.438
	5.	Door Top	101.1x44.5x3.1	2.379
	6.	Lock Rail	150x44.45x3.2	3.290
	7.	Glazing Clip	19.7x17.8x1.3	0.167
	B	**Twin Style Door**		
	1.	Top/Bottom Rail (for 12mm glass thickness)	90x45x3	3.727
	2.	Top/Bottom Rail (more than 12mm glass thickness)	90x45x3.0	3.506
	C	**Frame**	120x80x3	3.143
II	**A**	**Casement Window (Window is Flushing outside wall) – 40mm Series**		
	1.	Z Shutter	40x28x2.5	0.585
	2.	Hollow Z Shutter	41.50x29x1.5	0.636
	3.	Mullion	63x40x1.5	0.933
	4.	H Shutter/alternative of Sl. No. 2	40x41x2.5	0.638
	5.	Crimping Angle	50x50x4.9	1.177
	6.	Double glazing clip	25x8x1.2	0.132
	7.	Single glazing clip	24x25x1.2	0.166
	B	**Sliding Window**		
	1.	2 Track Bottom	61.98x29.70	0.875
	2.	2 Track Side & Top	61.98x29.70	0.778
	3.	3 Track Bottom	92.36x29.70	1.233
	4.	3 Track Side & Top	92.36x29.70	1.067
	5.	4 Track Bottom	123.02x29.70	1.500
	6.	4 Track Side & Top	123.02x29.70	1.293
	7.	Shutter Vertical	39x20x1.5	0.493
	8.	Shutter Interlock	39x20x1.5	0.612
	9.	Shutter Top & Bottom	41x20x1.5	0.472
III	**Partitions**			
	A	**Partition (Height more than 1.5 mtr.)**		
	1.	Single Partition (Single Glazing)	101.5x44.45x3	2.34

© 2022 MECON Limited All rights reserved

	2.	Double Partition (Single Glazing)	101.5x44.45x3	2.420
	3.	Single Partition (Double Glazing)	101.5x44.45x2.5	2.03
	4.	Double Partition (Double Glazing)	101.5x44.45x2.5	2.00
	B	**Partition (Height upto 1.5 mtr.)**		
	1.	Single Partition (Single Glzaing)	63.5x38.1x2.5	1.376
	2.	Double Partition (Double Glzaing)	63.5x38.1x2.5	1.443
	3.	Glazing Clip	19.7x17.8x1.3	0.167

7.5 Fittings

The item of wood work of joinery generally includes fittings such as hinges and screws for fixing of door shutters and is explicitly so mentioned in the item.

7.6 Hinges

Hinges shall be of iron, brass, aluminium or any other material as specified/approved. They shall present a neat appearance and shall operate smoothly. All hinges shall be preferably of steel and their riveted heads shall be well formed and smooth. Hinges shall be of the type specified and shall conform to the relevant Indian Standard Specifications.

7.7 Pressed steel door frame

Pressed steel door frame (up to 1000 mm opening profile type B, above 1000 mm opening profile type C as per IS-4351 with 35 mm thick flush door shutter (Teak wood veneer finished on both side, Vision panel should be provided in the shutter) at locations mentioned below in door/window schedule.

7.8 PVC door frame

PVC door frame with 30 mm thick rigid foam PVC paneled door shutter with paneling of 5 mm thick PVC sheet should be considered in all toilets, janitor room. (DSR -9.119 for Frame), DSR -9.120.2 (Shutter) – Refer DSR-2014.

8.0 TIMBER WORK

8.1 General

All timber used for carpentry and joinery works shall be new. It shall be well seasoned by a suitable process conforming to IS: 1141 before being planed to the required sizes. It shall be sound, straight, free from sap, radial cracks, decay, fungal growth, boxed heart, pitch pockets, borer holes, splits, loose knots, flaws or any other defects and shall show a clean surface when cut. Timber shall conform to the requirements of IS: 1003 (Part 1&2). The

© 2022 MECON Limited All rights reserved

finished components shall be given suitable preservative treatment wherever necessary.

8.2 Teak wood/Sal / Bija Sal / Deodar / Kail and other varieties of timber

8.2.1 Teak wood

The timber shall be of good quality and well seasoned. It shall be of fairly uniform colour and shall be free from defects such as cracks, dead knots, shakes etc. No individual hard and sound knot shall be more than 15 sq. cm. in size and aggregate area of all such knots shall not exceed 2 % of the area of the piece. Wood shall be generally free from sap wood but traces of the same shall be allowed. The timber shall be fairly grained having not less than 2 growth per cm width in cross section.

8.2.2 Sal / Bija Sal wood

Timber shall be of good quality and well seasoned. It shall have fairly uniform colour, reasonable straight grains and shall be free from all defects as mentioned in previous clauses. No individual hard and sound knot shall be more than 6 sq. cm. in size and aggregate area of all such knots shall not exceed 2 % of the area of the piece. There shall not be less than 5 growth rings per 2 cm of the width.

8.2.3 Deodar wood

The timber shall be of good quality and well seasoned. It shall have fairly uniform colour, reasonable straight grains and shall be free from all defects as mentioned in previous clauses. No individual hard and sound knot shall be more than 15 sq.cm. in size and aggregate area of all such knots shall not exceed 2 % of the area of the piece. There shall be at least 3 growth rings per cm width in cross section.

8.2.4 Kail wood

The timber shall be generally as specified in clause 8.2.3 for Deodar wood. However, there shall not be less than 2 growth rings per cm width in cross section.

8.2.5 Other varieties of timber

The timber as named in the item of work shall be used. It shall be well seasoned and generally free from defects such as dead knots, cracks, shakes, sap wood etc. However, traces of sap wood shall be allowed and sound and hard knots up to 2 % of the area of the piece shall be allowed.

8.3 Storage and Inspection

© 2022 MECON Limited All rights reserved

Timber shall be carefully stored and subject to inspection on site, piece by piece. The Engineer may reject such pieces as are considered by him not of the quality or meeting the requirements specified herein.

8.4 Moisture Content

Timber shall be accepted as well seasoned if its moisture content does not exceed the permissible limit as per IS: 287.

8.5 Tolerances for Timber

For timber allowance as specified in the IS: 1003 (Part 1&2) shall be applicable.

8.6 Wood Particles Boards

Particle boards for general purposes shall be of medium density conforming to IS:3087. These are of four types, Flat pressed single layer board (FPSI),Flat pressed three layer board (FPTH), Extrusion pressed solid board (XPSO) and Extrusion pressed tubular core (XPTU). Adhesive shall be BWR, WWR or un-extended CWR type. High density wood particle board shall conform to IS:3478 and are in flat sheets or moulded forms. These shall be of type 1 (BWR type of resin) or Type 2 (WWR or CWR type of resin). Both types of boards shall be of Grade A (resin content 20 to 50 percent) and Grade: (resin content 8-12 percent).

8.7 Veneered Particle Board

These shall conform to IS: 3097 and shall be of two grades. Exterior (grade-I with BWP or BWR type adhesive) & interior (grade-II with WWR or CWR type adhesive). Each grade of boards shall be of 4 types, solid core general purpose, solid core decorative, Tubular core general purpose and Tubular core decorative and accordingly designated.

8.8 Plywood for General Purpose

Plywood for general purpose shall conform to IS:303. Depending on type of adhesive used for bonding veneers, it is of 4 grades, BWP (boiling water proof), B.W.R (boiling water resistant), WWR (warm water resistant) and CWR (Cold Water resistant). Any species of timber may be used for plywood manufacture. However list of species, for the manufacture of plywood is given in Annexure 'B' of the IS: 303 for guidance.

Plywood is classified in 10 different types as per appearance of the surface. These are type AA,AB,AC,AD,BB, BC,BD,CC,CD and DD as detailed in

© 2022 MECON Limited All rights reserved

IS: 303. It is available from 3 ply to 11 ply with thickness from 3mm to 25mm.

8.9 Veneered Decorative Plywood

This quality of plywood shall conform to IS: 1328. These plywood shall be of two types Type 1 and Type 2 as per details given in IS: 1328. Species of timber for decorative face commonly used are given in Table 1 of IS: 1328 but the purchaser shall specify the particular veener to be used. Timber for cores and backs shall be either class I or II as specified in IS: 303. Adhesive used shall be BWR or WWR

8.10 FLUSH DOOR SHUTTERS, SHELVES

8.10.1 Flush door shutters

The door shall be of flush type solid core with single or double shutter as the case may be.

8.10.2 Shutters

The shutters shall be decorative or non-decorative type of the exterior or interior grade as described in the item and as shown in the drawings. It shall conform to the relevant specifications for the type and grade given in I.S. 2202/1983, specifications for Wooden Flush door shutter (solid core type). The flush door should be both side water proof phenols bonded. The finished thickness shall be as mentioned in the item. Face veneers or laminates used shall be of the pattern and colour approved by the engineer.

8.10.3 Fixtures and fastenings

These shall be as shown in table on the drawings or as indicated in the specifications. They shall be of oxidized brass and shall be of good workmanship, wherever not specified. However these needs to be got approved by the Architect. All fixtures and fastenings shall be sound and strong. The size, shape, design and finish shall be as shown on drawings and approved by the Architect.

Unless otherwise specified each leaf shall be hung with three hinges of specified makes. Each door shall be furnished with aldrop and latch, brass flush bolts, door closer or floor spring, handle, as per the detail drawing. The fixtures shall comply with the relevant Indian standards. Samples of all fixtures and fastening shall be got approved by the Architect.

All the fixtures shall be fixed to the joinery in a secure and efficient manner. Metal sockets shall be provided to all bolts where they enter stone, concrete etc.

© 2022 MECON Limited All rights reserved

Teakwood lipping patti to be provided on the edges of the shutter & to be fixed by approved adhesive with the help of nails & to be finished in French polish or paint as specified in detail drawing

8.10.4 Fittings for flush door shutter:

Sl. No.	Item	Nos. of Single leaf	Nos. for double leaf
1	Tower bolt 3 00mm for top	1	2
2	Tower bolt 150mm for bottom	1	1
3	Aldrop 300mm long with 16mm sliding bolt	1	1
4	Door handleswith continuous plate 150x38x12mm rod	1	2
5	Butt hinge (125 x 63x4mm) with cadmium plated MS screws	4	8
6	Door stopper	1	2
7	Rubber buffer	1	2
8	Pull bolt lock	1	-

Note: Mortice lock and hydraulic door closer to be used in door.

8.11 Timber doors

First class Indian teak wood of class as specified in the item shall be used. The timber shall be of high quality and well-seasoned. It shall have uniform colour free from defects such as cracks, dead knots, shakes, sapwood etc. It should not have hard knots and the aggregate area of such knots shall not be more than 1% of the area of the piece. The timber shall be close grained having not less than 2 wroth rings per cm. The maximum permissible percentage of moisture content for well-seasoned timber used in building work shall be as specified in the IS: 287.

8.11.1 Workmanship wood work

The work shall be carried out as per detailed drawings and/or as directed by the Architect. The wooden members of the frame shall be planed smooth and accurate to the full dimensions. Rebates, rounding, moldings, etc. as shown in the drawing shall be done before the members are joined into frames.

Jointing in timber frames must be made carefully and accurately. They shall be strong, neat and shall fit without edging or filling. The joints shall be pinned with hard wood or bamboo pins of 10 to 15-dia after the members of the frame are pressed together in a suitable vice-mechanism.

The door frame shall have rebate to house the shutters and the depth of such rebate shall be 1.25 cm.

© 2022 MECON Limited All rights reserved

Wood work shall be painted, oiled, polished or otherwise treated as specified. All portions of timber abutting against masonry or concrete portion of building shall be coated with boiling coal tar or other type of approved wood preservatives primer, before placing them in final position.

Before any surface treatment is applied in, the wood work shall be got approved by the Architect.

8.11.2 Fixing in position

The frames shall be fixed only after acceptance by the Architect. In case of door frames without sills, the vertical members shall be buried in floor for the full thickness of the floor and the door frame shall be temporarily braced at the sill level so as to prevent warping or distortion of frame during construction.

8.12 GLAZING

All windows and ventilators shall be provided with minimum 5 mm thick evergreen or similar colour float glass. All windows and ventilators located in fire prone areas shall be provided with minimum 6 mm thick toughened glass conforming to IS:5437.

For single glazed aluminium partitions and doors, 8mm or 10 mm thick clear toughened glass shall be used.

DGU glass of the following specifications SHGC - 0.25 to 0.3, U Value 1.8W/sqmtk or lesser, VL T 35to 45 and of approved make of following thickness in windows, doors, ventilators, partitions etc. with necessary clips, beadings etc. complete. Only the clear opening of glass shall be measured for payment. Toughened glass of 6mm thickness shall be used for all windows/ventilators in toilets. All glazing work shall conform to IS:3548. For internal glazed partition, 8mm thick & 10mm thick clear toughened glass shall be provided.

8.12.1 Glass panels

Unless otherwise specified, glass pane used in glazed or paneled-&-glazed shutters, shall be of specified make. The glass shall be free from flaws such as speaks, bubbles, smoke waves, air holes, etc. and shall conform to the relevant IS: 1761.

Unless otherwise specified, glass panels used in shutters of bath room and lavatories shall be frosted and of thickness as mentioned above and shall be free from any flaws.

© 2022 MECON Limited All rights reserved

Where ever specified, special quality glass such as plate glass, wired glass flat glass etc. shall be used. They shall conform to relevant IS standards as regards quality.

Putty for glazing in wooden frames of doors and vision panel

Putty shall be prepared by mixing one part of white lead with three parts finely powdered chalk and then adding boiled linseed oil and mixing the whole thing into a homogeneous stiff paste. It shall be free from impurities like dust, grit, etc. and shall conform to IS: 419.

8.13 FITTINGS FOR DOORS, WINDOWS, ETC.

8.13.1 General

Fittings shall be of iron, brass, aluminium or as specified. These shall be well made, reasonably smooth and free from sharp edges, corners, flaws and other defects. Screw holes shall be countersunk to suit the head of specified wood screws. All hinge pins shall be of steel and their riveted heads shall be well formed.

Iron fittings shall be finished bright or black enameled or copper oxidised or painted as specified. Brass fittings shall be finished bright, oxidised or chromium plated and aluminium fittings shall be finished bright or anodised as specified. Fittings shall be got approved by the Engineer before fixing. Screws used for fittings shall be of the same metal and finish as the fittings. However, anodised cadmium/chromium plated M.S. screws of approved quality shall be used for fixing aluminium fittings.

8.13.2 Hinges

8.13.2.1 Butt hinges

These shall be mild steel but hinge (medium), brass butt hinges, extruded aluminium alloy butt hinges or as specified. Type (light/medium/heavy weight) and size shall be as specified in the drawing or schedule of items. Brass / Aluminium and M.S butt hinges shall conform to Indian Standard Specification for butt hinges IS: 205 and IS: 1341 respectively. Hinges shall be finished bright or satin polished or anodised.

8.13.2.2 Sliding Door Bolts

Mild steel sliding door bolts shall conform to IS: 281and are of 2 types, plate type and clip or bolt type. Plate type bolts shall have plates and straps stove enameled black with hasp and bolt finished bright or copper oxidized or nickel / chromium plated. Clip or bolt type are copper oxidized or plated. All screw holes in the M.S bolts shall be countersunk. Diameter of bolt for plate type is 12mm and for clip type is 16mm.

© 2022 MECON Limited All rights reserved

Non ferrous metal sliding doors are of brass or aluminium alloy and shall conform to IS:2681. Brass sliding bolts are of 150 to 450mm size with bolt dia being 16mm for 150 to 300mm and 18mm for 375 and 450 size. Aluminium alloy sliding bolts are of size 200 to 450mm with 16mm bolt dia. Brass quality is finished satin, polished or plated and aluminium alloy bolts are anodised.

For both ferrous and non-ferrous metal bolts the size of the sliding bolt is determined by the length of the bolt.

8.13.2.3 Door Rim Latch

This shall be of mild steel, brass, aluminium alloy or as specified and of sizes 75, 100, 125 and 150mm denoted by overall length of the body measured from outside face of the fore end to the rear end. These are of type 1 and type 2 and shall conform to IS: 1019.

8.13.2.4 Tower Bolts

Tower bolts may be of one of the following types and shall conform to IS: 204 (Part 1 and 2).

i) Barrel tower bolts

These shall be of bright finished/stove enamelled/ black painted mild steel tower bolts, brass barrel tower bolts with cast brass barrel and rolled or drawn brass bolt/brass barrel tower bolts with barrel of extruded sections of brass and rolled or drawn brass bolt/brass barrel tower bolts with brass sheet barrel and rolled or drawn brass bolt. Aluminium barrel tower bolts with barrel and bolt of extruded section of aluminium alloy-bolts and barrel anodised.

ii) Semi-barrel tower bolts

These shall be mild steel semi barrel tower bolts full cover/open type with mild steel sheet pressed barrel and cast iron/mild steel bolt. Bolt bright finished other parts stove enameled black.

iii) Rivetted or spot welded tower bolts

These shall be mild steel tower bolts rivetted type with black flat and mild steel/cast iron bolt and open staple.

iv) Skeleton tower bolts

These shall be of bright finished / stove enameled / black painted mild steel or brass bright finished skeleton tower bolts with cast brass/extruded sections plate and staples and rolled or drawn brass

© 2022 MECON Limited All rights reserved

bolt or Aluminium skeleton tower bolts with plates staples and bolt or extruded sections of Aluminium alloy plate and staple anodised.

8.13.2.5 Door Handles

Door handles shall conform to IS: 208 and shall be of 4 types. Type 1 is cast Iron / Brass / Aluminium or zinc alloy die casting and available in 75,100,125 150mm sizes. Type 2 is mild steel pressed oval in 75, 100,115 and 135mm sizes. Type 3 is mild steel present half oval in 75,90 and 100mm sizes. Type 4 is fabricated (brass / aluminium alloy) in 75,100 and 125mm sizes. The size of the handle shall be determined by inside (grip) size overall size and internal depth of the handles shall be as detailed in IS: 208.

Finish for type 1 shall be satin/nickel plating, copper oxidising and bronze finish for cast-brass and zinc die cast handles and stove enamelled black or copper oxidized for cast iron handles. Aluminium handles shall be anodized. Type 2 and 3 handles shall be stove enamelled black. For type 4 it shall be satin finish, nickel plating, copper oxidized and bronze finish for brass handles and anodizing for aluminium handles.

8.13.2.6 Mortice Lock and Rebated Mortice lock

Mortice lock with latch and pair of lever handles shall have body of steel, Aluminium alloy or brass and shall be right or left handed as shown in the drawing or as directed by the Engineer. It shall be of the best Indian make of approved quality and shall conform to IS: 2209 / 6607. The shape and pattern shall be approved by the Engineer. The size of the lock shall be determined by its length. The lock for single leaf door shall have plain face and that for double leaf door a rebated face. Lever handles with springs shall be mounted on plates and shall weigh not less than 0.5 kg per pair. These shall be of brass, finished, bright chromium plated or oxidised. The locks shall be of 65, 75 and 100 mm sizes.

8.13.2.7 Floor Door Stopper

These are for the use of the door shutters of 30, 35,40 & 45mm thickness. It is made of aluminium alloy/ brass with springs of phosphor bronze or hard drawn steel wire and tongue of aluminium/brass/nylon/ plastic. The floor door stoppers shall conform to IS: 1823 and shall be best Indian make of approved quality. Width of cover plate is 40mm but its overall length is 140mm for 30 and 35mm thick shutters & 150mm for 40 and 45mm shutters. The body shall be cast in one piece and fixed to cover plate by brass or M.S screws. On the extreme end there shall be rubber cushion to absorb shocks. The extension of the door stopper shall be in flush with floor and be finished bright/satin/chromium plated or anodised.

© 2022 MECON Limited All rights reserved

8.13.2.8 Hooks and Eyes

These shall be of mild steel or hard drawn brass and shall generally conform to IS: 207.

8.13.2.9 Casement Window Handles

These shall be made of cast brass, steel protected against rusting, aluminium, pressed brass or as specified. Casement handles for single leaf window shutter shall be left or right handed and shall weigh as specified.

8.13.2.10 Casement Peg Stays

These shall be made of cast brass, steel protected against rusting, aluminium, cast alloy or as specified. The stay shall be made from a channel section and shall be 300mm long with steel peg and locking bracket. The peg stay shall have three holes to open the window in three different angles. The shape and pattern of stays shall be approved by the Engineer. The peg stay shall be minimum 2mm thickness in case of brass and aluminium and 1.25 mm in case of steel.

8.13.2.11 Quadrant Stays

These shall be made of cast brass, aluminium alloy, CP iron or as specified. The shape and pattern shall be approved by the Engineer. It shall weigh as specified.

8.13.2.12 Fan Light Pivots

These shall be made of mild steel, cast brass or aluminium alloy or as specified and shall generally conform to IS: 1837.

The pattern and the shape of the catch shall be as approved by the Engineer and size and finish shall be as specified.

8.13.2.13 Fan light catch

These shall be made of mild steel, cast brass, aluminium alloy or as specified and shall generally conform to IS: 364. Steel springs of the catch shall be 0.90 mm dia, 6 coils, 12 mm internal diameter and 20 mm long. The pattern and the shape of the catch shall be as approved by the Engineer.

8.13.2.14 Steel Frames

These shall conform to IS:4351. The frames shall be manufactured from commercial mild steel sheets of 1.25mm thickness and are suitable for door shutters 30 to 40mm thick. The door frames are designated as per profile A, B and C.

© 2022 MECON Limited All rights reserved

Profile A Size 105x60mm : rebated for one set of shutters

Profile B Size 125x60mm : rebated for one set of shutters

Profile C Size 165x60mm : rebated for two sets of shutters.

9.0 SANITARY, PLUMBING INCLUDING RAINWATER FITTINGS, FIXTURES, WASTE NETWORK

9.1.1 GENERAL INSTRUCTIONS:

The detailed specifications given hereinafter are for the items of works described in the schedule of quantities attached herein, and shall be guidance for proper execution of work to the required standards. It may also be noted that the specifications are of generalised nature and these shall be read in conjunction with the description of item in schedule of quantities and drawings. The work also includes all minor details of construction which are obviously and fairly intended and which may not have been referred to in these documents but are essential for the entire completion in accordance with standard Engineering practice.

Unless specifically otherwise mentioned, all the applicable latest codes and standards published by the Indian Standard Institution and all other standards shall govern in all respects of design, workmanship, quality and properties of materials and methods of testing, method of measurements etc. Wherever any reference to any Indian Standard Specification occurs in the documents relating to this contract, the same shall be inclusive of all amendments issued their to or revisions thereof, if any. In case, there is no I.S.I. specification for the particular work, such work shall be carried out in accordance with the instructions in all respects, and requirements of the Engineer-in-Charge. The work shall be carried out in a manner complying in all respects with the requirements of relevant codes and standards or as directed by the Engineer-in-Charge and, unless otherwise mentioned, nothing extra shall be paid on this account.

Samples of various materials, fittings etc. proposed to be incorporated in the work shall be submitted by the contractor for approval of the Engineer-in-charge before order for bulk supply is placed.

The contractor shall take instructions from the Engineer-in-Charge regarding collection and stacking of materials in any place. No excavated earth or building materials shall be stacked on areas where other buildings, roads, services, compound walls etc. are to be constructed.

The contractor shall maintain in perfect condition all works executed till the completion of the entire work allotted to him. Where phased delivery is contemplated, this provision shall apply to each phase.

© 2022 MECON Limited All rights reserved

The contractor shall give a performance test of the entire installation(s) as per standard specifications before the work is finally accepted and nothing extra whatsoever shall be payable to the contractor for the test.

The contractor shall clear the site thoroughly of all debris, surplus excavated materials and rubbish etc. left out of his work and dress the site around the building to the satisfaction of the Engineer-in-Charge before the work is considered as complete.

In case of any difference or discrepancy between the specifications and the description in the schedule of quantities, the schedule of quantities shall take precedence. In case of any difference or discrepancy between specifications and drawing, the specifications shall take precedence. In case of any difference or discrepancy between the specifications for Civil works and specification for Public Health Engg. works, specifications for Civil works shall take precedence.

9.1.1.01 APPROVAL:

The materials for Sanitary & Plumbing works which are to be supplied by the contractor shall conform to the relevant IS specifications and the approved vendor list attached alongwith the specification and shall be approved by the Engineer-in-Charge prior to installation of fixture and the approved samples shall be maintained at site till the completion of work. The approved makes of main items are, however specified in the list of approved makes of materials separately.

9.1.1.02 PRECAUTIONS:

While carrying out pipe line work, in case, the contractor encounters any interference with other services such as cables, conduits etc, he shall take sufficient precautions in order to prevent any damage to them. If any damage occurs, it shall be rectified to its original condition at his own cost to the satisfaction of the officers concerned with such services and no claim whatsoever shall be entertained in this regard.

The contractor shall ensure that all inserts, pipe lines embedded in structural members or sleeves are placed in position in co-ordination with civil work.

All public health engineering services shall be handed over to Engineer-in-charge complete in all respects on completion of the work. Incomplete work will not be taken over. Any loss or damage to these services due to any reasons by anybody whatsoever before handing over will be at contractor's risk and cost. Any damage to any structural/finishing work done during the testing or rectification shall be made good by the contractor at his own cost and risk.

© 2022 MECON Limited All rights reserved

9.1.1.03 COST TO BE COVERED:

The rates quoted by the tenderer under this contract shall cover the cost of all the following elements.

9.1.1.04 MISCELLANEOUS WORK:

The contractor carrying out the construction work shall take effective measures to carefully open out all existing channels, culverts, bridges, pipelines, conduits, water courses, sewer, drains, electrical cables, transmission lines and their supports and all works buried or otherwise where such services have to be interfered with the purpose of the construction of the works. He shall provide and arrange all necessary temporary supports and diversions if necessary across/under/even through along sides of the trenches and all other parts of construction works for all such channels, culverts, bridges, pipe lines, conduits.

9.1.1.05 CLEARANCE FOR ROADS AND FOOT PATHS:

The contractor shall arrange to carry out all works with least interference practicable with public footpath and vehicular traffic and with existing waste water or storm water drainage arrangements and provide all necessary road barriers, fences, notices, lights, gangways, access crossings, diversions for traffic, temporary drains, dewatering channels, chutes pumping or water lifting arrangements and all other facilities for the proper execution of the works to the approval and satisfaction in all respects of the Engineer-in-Charge. Any work carried out by the contractor in this connection shall be deemed as temporary works incidental to the construction work.

9.1.1.06 LOCATION:

The rates quoted by the tenderer under this contract shall be applicable for the work at all floors and locations.

9.1.1.07 DEWATERING: The rates quoted by the tenderer under this contract shall include bailing or pumping out all the water which may accumulate during the progress of the work either through seepage, springs, rain or any other cause.

9.1.1.09 FORMALITIES WITH STATUTORY BODIES: The work shall be carried out in a manner complying in all respects with requirement of the codes and standards or as directed by the Engineer-in-Charge and, unless otherwise mentioned, nothing extra shall be paid on this account.

9.1.1.10 PTMT FITTINGS: The PTMT fittings shall be as per CPWD specifications.

© 2022 MECON Limited All rights reserved

9.1.2 LIST OF INDIAN STANDARDS

The following IS codes shall be referred in execution of PH Engineering works.

Indian Standard	Reaffirmation	Subject
27 - 1992	Reaffirmed 2019	Specifications for Pig Lead
407- 1981	Reaffirmed 2016	Brass tubes for General purposes
638- 1979	Reaffirmed 2018	Sheet rubber jointing & rubber insertion jointing
651- 2007	Reaffirmed 2017	Specifications for Salt glazed stoneware pipes & fittings.
771 (Pt I & VII)	-	Glazed Fire Clay Sanitary Appliances.
771 - 1979 (Pt. I)	Reaffirmed 2017	General requirements
771 - 1985 (Pt. II)	Reaffirmed 2018	Specific requirements of kitchen & laboratory sinks
771 - 1979 (Pt. III/ Sec 1)	Reaffirmed 2017	Specific requirements of urinals (section 1- slab urinals)
771 – 1985 (Pt. III/ Sec2)	Reaffirmed 2015	Specific requirements of urinals (section 2- Stall urinals)
771- 1979 (Pt. IV)	Reaffirmed 2017	Specific requirements of postmortem slabs.
771- 1979 (Pt.V)	Reaffirmed 2017	Specific requirements of shower trays
771- 1979 (Pt. VI)	Reaffirmed 2015	Specific requirements of bed pan sinks
771 - 1981 (Pt. VII)	Reaffirmed 2017	Specific requirements of slop sinks
774- 2004	Reaffirmed 2014	Flushing cistern for water closet and urinals (Other Than Plastic Cistern)
775- 1970	Reaffirmed 2000	Cast iron brackets and supports for wash basin and sink.
778- 1984	Reaffirmed 2015	Copper alloy gate & Globe check valves for water works
779- 1994	Reaffirmed 2015	Water meters (domestic type)
781- 1984	Reaffirmed 2015	Cast copper alloy screw down bib taps & stop cocks for water services
782- 1978	Reaffirmed 2017	Caulking lead.
783- 1985	Reaffirmed 2017	Code of practice for laying concrete pipes.
1172- 1993	Reaffirmed 2016	Code of basic requirements for water supply, drainage and sanitation
1200-1979 (Pt. 16)	Reaffirmed 2002	Method of measurements for Laying of water and sewer lines including appurtenant items.
1200-1981 (Pt. 19)	Reaffirmed 2002	Method of measurements for Water supply, plumbing and drains.

© 2022 MECON Limited All rights reserved

1239-2004 (Pt. I)	Reaffirmed 2019	Mild steel tubes
1239- 1992 (Pt. II)	Reaffirmed 2016	Mild steel Tubular & other wrought steel pipe fittings
1300- 1994	Reaffirmed 2015	Phenolic moulding material specification
1536- 2001	Reaffirmed 2016	Centrifugally cast iron (spun) pressure pipes for water, gas and sewage
1537- 1976	Reaffirmed 2014	Vertically cast iron pressure pipes for water, gas and sewage
1538 -1993	Reaffirmed 2018	Cast iron fittings for pressure pipes for water, gas and sewage
1700- 1973	Reaffirmed 2003	Drinking fountains
1701- 1960	Reaffirmed 2017	Mixing Valves for Ablutionary and Domestic Purposes
1703- 2000	Reaffirmed 2015	Water Fittings- Copper Alloy Float Valves (horizontal plunger type).
1711- 1984	Reaffirmed 2015	Self closing taps for water supply purposes.
1726- 1991	Reaffirmed 2017	Cast iron manhole covers and Frames.
1729- 2002	Reaffirmed 2017	Cast iron/ductile iron drainage pipes and fittings for over ground NP pipeline S/S series.
1742- 1983	Reaffirmed 2017	Code of practice for building drainage
1795- 1982	Reaffirmed 2015	Pillar taps for water supply purposes
1978- 1982	Reaffirmed 2002	Specification for line pipe (MS Seamless)
1979- 1985	Reaffirmed 2002	Specification for high test line pipe
2065- 1983	Reaffirmed 2017	Code of practice for water supply in buildings.
2097-2012	Reaffirmed 2018	Foam making branch pipe and Foam Inductor .
2104- 1981	Reaffirmed 2003	Water meter boxes (domestic type)
2267- 1995	Reaffirmed 2015	Polystyrene moulding and extension materials — specification
2326- 1987	Reaffirmed 2018	Automatic flushing cistern for urinals(Other than Plastic Cisterns)
2379- 1990	Reaffirmed 2015	Colour code for identification of pipe lines.
2401- 1973	Reaffirmed 2003	Code of practice for selection, installation & maintenance of domestic water meters
2527- 1984	Reaffirmed 2015	Code of practice for fixing rain water gutters and down pipes for drainage
2546 - 1974	Reaffirmed 2015	Specification for galvanized Mild Steel Fire bucket.
2548- 1996 (Pt. I)	Reaffirmed 2017	Plastic seats and covers for water closets.- Thermoset seats and covers

© 2022 MECON Limited All rights reserved

2548- 1996(Pt. II)	Reaffirmed 2017	Plastic water closet seats and covers.- Thermo Plastic Seats and covers
2556 (Pt. 1 to XV)	--	Specification for Vitreous (Vitreous China) sanitary appliances.
2556- 1994 (Pt.1)	Reaffirmed 2004	General requirements
2556- 1994 (Pt.2)	Reaffirmed 1999	Specific requirements of wash down water-closets
2556- 2004 (Pt.3)	--	Specific requirements of squatting pans
2556- 2004 (Pt. 4)	--	Specific requirements of wash basins
2556- 1994 (Pt.5)	Reaffirmed 2004	Specific requirements of laboratory sinks
2556- 1995(Pt.6)	Reaffirmed 2003	Specific requirements of urinals & partition plate
2556- 1995 (Pt.7)	Reaffirmed 2003	Specific requirements of accessories for sanitary appliances
2556- 1995 (Pt.8)	Reaffirmed 1998	Specific requirements of pedestal close coupled & wash down and siphonic water closets
2556- 2004 (Pt.9)	--	Specific requirements of pedestal type bidets
2643 -2005	Reaffirmed 2015	Pipe Threads where pressure tight joints are not made on the threads — dimension, tolerances and designation
2692- 1989	Reaffirmed 2018	Ferrules for water services.
2871- 2012	Reaffirmed 2018	Branch pipe, universal, for fire fighting purposes
2951 (Pt. Ito II)	--	Recommendation for estimation of flow of liquids in closed conduits.
2951- 1965 (Pt. I)	Reaffirmed 2017	Head loss in straight pipes due to frictional resistance
2951- 1965 (Pt. II)	Reaffirmed 2017	Head loss in valves & fittings.
3006- 1979	Reaffirmed 2017	Chemically resistant glazed S.W. pipes and Fitting
3076- 1985	Reaffirmed 2003	Low density polyethylene pipes for potable water supply
3114- 1994	Reaffirmed 2014	Code of practice for laying of Cast Iron pipes.
3311- 1979	Reaffirmed 2003	Waste plug & its accessories for sinks & wash basins.
3328- 1993	Reaffirmed 2019	Quality tolerances for water for swimming pools
3389- 1994	Reaffirmed 2015	Urea formaldehyde moulding materials
3486- 1966	Reaffirmed 2000	Specification for Cast iron spigot and socket drain pipes
3489- 1985	Reaffirmed 2000	Specifications for enameled steel bath

© 2022 MECON Limited All rights reserved

		tubs
3589- 2001	Reaffirmed 2017	Specifications for steel pipes for water & sewage (168.3 to 2540 mm outside dia.)
3844- 1989	Reaffirmed 2015	Code of practice for installation and maintenance of internal fire hydrants Hose Reels in premises.
3950- 1979	Reaffirmed 2003	Specification for Surface boxes for sluice valve.
3989- 1984	Reaffirmed 2000	Centrifugally cast (spun) iron spigot and socket soil, waste and ventilating pipes, fittings & accessories.
4111 (Pt. I to V)	-	Code of practice for ancillary structures in sewage system.
4111- 1985 (Pt. II)	Reaffirmed 2001	Flushing tanks
4111- 1985 (Pt. III)	Reaffirmed 2001	Inverted siphon
4111- 1968 (Pt. IV)	Reaffirmed 2001	Pumping stations & pumping mains (rising mains)
4111- 1993 (Pt. V)	Reaffirmed 2004	Tidal out-falls
4120- 1967	Reaffirmed 2000	Tubs and baths.
4854 (Pt. I to III)		Glossary terms for valves and their parts
4854- 1969 (Pt. I)	Reaffirmed 1999	Screw down stop, check & gate valves & their parts
4854- 1968 (Pt. II)	Reaffirmed 1999	Plug valves & cocks & their parts
4854-1974 (Pt. III)		Butterfly valves
4927- 1992	Reaffirmed 2002	Unlined flax canvass hose for fire fighting
4927- 1985	Reaffirmed 2000	Specification for gas cartridge for use in Fire extinguishers.
4985- 2000	--	Specifications for unplasticised PVC pipes for potable water supplies
5290- 1993	Reaffirmed 2003	Specifications for Landing valves.
5312 (Pt. I)		Swing check type reflux (non return) valves
5312- 1984 (Pt. I)	Reaffirmed 2000	Reflux (non return) valves — single door pattern
5329- 1983	Reaffirmed 2001	Code of Practice for sanitary pipe work above ground for building
5330- 1984	Reaffirmed 2000	Criteria for design for anchor blocks for pen-stocks with expansions joints.
5382- 1985	Reaffirmed 2003	Specifications for rubber sealing rings for water, gas & sewer mains
5822- 1994	Reaffirmed 2004	Code of Practice for laying of welded steel pipes for water supply
5961- 1970	Reaffirmed 2003	Specifications for Cast Iron grating for drainage purposes

© 2022 MECON Limited All rights reserved

6234-2003		Portable fire Extinguisher water Type (Stored Pressure) — Specification
6279- 1971	Reaffirmed 2001	Equipment for grit removal
6280- 1971	Reaffirmed 2001	Sewage screens
6295- 1986	Reaffirmed 2001	Code of practice for water supply & drainage in high altitude & / or sub-zero region
6392- 1971	Reaffirmed 1998	Steel pipe flanges
6411- 1985	Reaffirmed 2000	Specifications for gel coated glass fiber reinforced polyester resin bath tubs
6418- 1971	Reaffirmed 2000	Cast Iron & malleable flanges for general engg. Purpose
6494- 1988	Reaffirmed 2000	Code of Practice for water proofing of under ground water tanks & swimming pools
6587- 1987	Reaffirmed 2003	Specifications for Spun hemp yarn
7181- 1986	Reaffirmed 2000	Horizontally Cast Iron Double Flanged pipe for water, gas & sewage.
7231- 1994	Reaffirmed 2004	Specifications for Plastic Flushing Cisterns for w.c. & urinals
7558- 1974	Reaffirmed 2001	Code of Practice for domestic hot water installations
7634 (Pt. I to III)		Code of Practice for Plastic pipe work for potable water supplies
7634- 1975 (Pt. I)	Reaffirmed 2002	Choice of materials & general recommendations
7634- 1975 (Pt. II)	Reaffirmed 2002	Laying & jointing polyethylene (PE) pipes
7634- 2003 (Pt. III)	--	Laying & jointing un plasticised PVC pipes
7740- 1985	Reaffirmed 2001	Code of Practice for road gullies
7834 (Pt.I to VIII)		Injection moulded PVC socket fittings with solvent cement joints for water supplies
7834— 1987(Pt,I)	Reaffirmed 2003	General requirements
7834- 1987 (Pt.II)	Reaffirmed 2003	Specific requirements for 45 ^{0} elbows
7834- 1987 (Pt, III)	Reaffirmed 2003	Specific requirements for 90^0 elbows
7834- 1987 (Pt. IV)	Reaffirmed 2003	Specific requirements for 90^0 tees
7834- 1987 (Pt.V)	Reaffirmed 2003	Specific requirements for 45° tees
7834- 1987 (Pt. VI)	Reaffirmed 2003	Specific requirements for sockets
7834-1987 (Pt. VII)	Reaffirmed 2003	Specific requirements for unions
7834- 1987 (Pt. VIII)	Reaffirmed 2003	Specific requirements for caps
8008(Pt. I to VII)		Injection moulded HOPE fittings for potable water supplies

© 2022 MECON Limited All rights reserved

8008- 2003 (Pt. I)	--	General requirements for fittings
8008- 1976 (Pt. II)	Reaffirmed 1997	Specific requirements for 90 ° bends
8008- 2003 (Pt. III)		Specific requirements for 90 ° bends
8008- 2003 (Pt. IV)	--	Specific requirements for reducers
8008- 2003 (Pt, V)	--	Specific requirements for ferrule reducers
8008- 2003 (Pt. VI)	--	Specific requirements for pipe ends
8008- 2003 (Pt. VII)	--	Specific requirements for sandwich flanges
8090 — 1976	Reaffirmed 2000	Coupling, branch pipe, nozzle used in hose reel tubing for fire fighting
8329- 2000	--	Centrifugally cast (spun) ductile iron pressure pipes and fittings for water, gas & sewage
8413- 1977 (Pt. I)	Reaffirmed 2001	Trickling Filter
8718- 1978	Reaffirmed 2000	Specifications for vitreous enameled steel kitchen sinks
8727- 1978	Reaffirmed 2000	Specifications for vitreous enameled steel wash basin
8835-1978	Reaffirmed 1999	Guideline for planning and design of surface drains.
8931- 1993	Reaffirmed 2003	Specifications for copper alloys Fancy single taps, combination tap assembly & stop valves for water services
9140- 1996	Reaffirmed 2002	Method of sampling of vitreous & fire clay sanitary appliances
9338- 1984	Reaffirmed 2000	Specifications for Cast Iron screw down stop valves and stop & check valves for water works purposes.
9739- 1981	Reaffirmed 2003	Specifications for Pressure reducing valves I for Domestic water supply system.
9758- 1981	Reaffirmed 2003	Flush valves and Fittings for water closets and urinals
9762- 1994	Reaffirmed 2004	Specifications for polyethylene floats for float valves
9763- 2000	--	Specifications for Plastic Bib taps, pillar taps, angle valves and stop valves for hot & cold water service.
9972 -2002	--	Specification for Automatic sprinkler Heads for Fire Protection Service.
10221- 1982	Reaffirmed 1997	Code of practice for coating and wrapping of underground M.S. steel pipeline
11606 - 1986	Reaffirmed 2000	Method for sampling of cast iron pipes

© 2022 MECON Limited All rights reserved

		and I fittings.
12183- 1987 (Pt. I)	Reaffirmed 2004	Code of practice for Plumbing in multi-storied buildings (for water supply).
12231-1987	Reaffirmed 2003	UPVC pipes for section & delivery lines of agricultural pumps—Specification
12235 - 1986	Reaffirmed 1998	Method of test for UPVC pipe for potable water supply
12288 - 1987	Reaffirmed 2002	Code of practice for use and laying of Ductile Iron pipes.
12469 - 1988	Reaffirmed 2002	Specifications for pumps
12592- 2002	--	Precast concrete frame & cover (SFRC frame & cover)
12701-1996	Reaffirmed 2002	Specifications for rotational moulded polyethylene water storage tanks
12709 - 1994	Reaffirmed 2004	Glass fiber reinforce plastic(GRP) pipes, joints & fittings for use for potable water supply — Specification.
12820 - 1989	Reaffirmed 1999	Dimensional Requirements of Rubber Gaskets for Mechanical Joints & push in joints for use with Cast Iron Pipes & fittings for carrying water, Gas & sewarge.
13095-1991	Reaffirmed 2003	Butterfly valves for general purposes
13382-2004		Cast Iron specials for mechanical & push-on flexible joints for pressure pipelines for Water, gas & sewage
13592- 1992	Reaffirmed 2002	Specifications for PVC soil, waste & rain water (SWR) including ventilation pipes
13983-1994	Reaffirmed 2004	Specifications for stainless steel kitchen sinks & drain boards for domestic purpose
14333-1996	Reaffirmed 2001	Specification for HDPE pipes for sewerage system.
14402-1996	Reaffirmed 2001	GRP pipes, joints & fittings — Specification.
14735-1999		UPVC injection moulded fittings for UPVC SWR pipes Specifications.
14845- 2000	Reaffirmed 2004	Resilient seated cast iron air relief valves for water works purposes Spn
14846- 2000	--	Specifications for sluice valve for water works purposes (50 to 1200 mm size
15265 - 2003	--	Specifications for flexible PVC pipes or polymer reinforcement thermo plastic hoses for suction and delivery lines for Agricultural pumps.
15328 - 2003	--	UPVC non pressure pipes for use in

© 2022 MECON Limited All rights reserved

		underground drainage and sewerage system — Specifications.
15450- 2004	--	Polyethylene/Aluminium/Polyethylene composite pressure pipes for hot and cold water supplies — Specifications.

© 2022 MECON Limited All rights reserved

9.1.3: MINIMUM WEIGHT OF MOST COMMONLY USED SANITARY APPLIANCES & WATER FITINGS:

The minimum unit weight of each fitting shall not be less than as given in the following table and tolerance for weight shall be as per relevant IS code.

S.N.	Description of items	Nominal size/thickness	IS code	Minimum Unit Weight
1	Brass non-fancy type Bib Tap Please see Table under relevant item for other sizes.	15mm	781- 1984	400 Grams
2	C.P. brass fancy type Bib Tap	15mm	8931- 1993	550 Grams
3a	Brass non-fancy types Stop cock -Internally threaded	15mm	781- 1984	330 Grams
3b	Brass non-fancy types Stop cock -Externally threaded	15mm	781- 1984	400 Grams
4	C.P. brass fancy types Stop cock	15mm	8931- 1993	550 Grams
5	C.P. brass concealed typed Stop cock	15mm	8931- 1993	750 Grams
6	C.P. brass fancy Pillar Tap	15mm	1795- 1982	650 Grams
7	C.P. brass waste coupling	32mm	3311- 1979	200 Grams
8	C.P. brass waste coupling	40mm	3311- 1979	250 Grams
9 a	C.I. Nahani Trap 165mm inlet dia.	75mm(outlet)	1729-2002/ 3989- 1984	6.50 Kg.
9 b	CI. Floor Trap 100 mm inlet dia.	75mm(outlet)	1729-2002/ 3989- 1984	4.80 Kg.
9 c	C.I. Nahani Trap with 20 mm water seal	65mm(outlet)	non ISI	4.50 Kg.
10	Cast Iron surface box for sluice valve	(rectangular shape)	3950-1979	33 kg.

The minimum unit weight of each fitting shall not be less than as given in the following table which are used in General practice.

S.N.	Description of items	Nominal size/ thickness	Minimum Unit Weight

© 2022 MECON Limited All rights reserved

1.	C.P. brass fancy Shower rose	15mm	125 Grams
2.	C.P. brass bottle trap	32mm.	500 Grams
3.	C.P. brass bottle trap	40mm	550 Grams
4.	C.P. brass liquid soap dispenser		250 Grams
5.	C.P. brass coat and hat hook		150 Grams
6.	C.P. brass Towel rod bracket [pair]		100 Grams
7.	C.P. brass Towel rod [600 mm long]	20mm	150 Grams
8.	G.I. Clamps thickness for GI piping	2 MM	
9.	MS Clamps thickness for CI piping	3 MM	
10.	Rain water lead sheet flashing		38.00 kg/sqm
11.	C.I. frame and cover for Gully Trap		7.50 kg.
12.	S.S. Grating for Nahani Trap		50 Grams
13.	C.P. brass grating for Nahani Trap		190 Grams
14.	C.P. Brass Dome shape grating 1		275 Grams
15.	Cast Iron surface box for sluice valve 1 (circular shape)		14 kg.

9.1.4 MANDATORY TESTS / OPTIONAL TESTS

1. The following mandatory tests shall be carried out when the qty. of materials to be incorporated in the work exceeds the minimum qty. specified in col.5 of the table below irrespective of whether the materials are with I.S. mark, or otherwise.

2. Optional tests specified or any other tests shall be carried out in case of specialized work/ important structure at Engineer Incharge's discretion.

3. Testing charges including incidental charge and cost of sample for testing shall be borne by the contractors for all mandatory tests.

4. Testing charges for optional tests shall be paid by the Dept. However, the incidental charges and cost of sample for testing shall be borne by the contractor.

5. In case of non-I.S. materials, it shall be the responsibility of the contractor to establish the conformity of material with relevant specification by carrying out necessary tests. Testing charges including incidental charge and cost of sample for testing shall be borne by the contractors for such tests.

© 2022 MECON Limited All rights reserved

9.1.4.1 Mandatory tests for Sanitary & Plumbing works:

Material	Test	Field/lab test	Test procedure	Minimum quantity of material / work for carrying out the test 5	Frequency of sampling	Remarks
1	2	3	4	5	6	7
G.I. pipes	**Physical** Dimensional Nominal unit weight Tensile Elongation **Chemical** Mass of zinc coating sulphur, phosphorus	 Field /lab Field /lab Lab Lab Lab	 IS 4736 IS 228 IS 228	 >20tubes > 20tubes >1000/500 upto 25 mm bore >25 mm bore respectively. Up to bore 25mm 1 tube/1000 or part thereof >25mm bore 1 tube/500 tube	 Sampling & criteria for conformity as per IS 4711	
C.I. Pipe Soil quality	Dimensional Unit weight Hammer test Hydrostatic test Hardness & grade	Field/lab Field/lab Field/lab Field/lab Field/lab		>20 pipes >20 pipes	Sampling & Conformity as per IS 3981 IS 1729 IS 1500	Hardness & grade shall be optional
Pig lead	Chemical Analysis	Lab	IDS 1817	Lot >1000 kg, if less Mfr. test report to be furnished	Each lot >1000 Kg.	
Sanitary fittings	Manufacturer s test certificate to be produce IS mark materials.					
CP brass fittings	Manufacturer ’s test					

© 2022 MECON Limited All rights reserved

bib taps / stop cocks	certificate to be produced IS mark materials.					

9.1.4.2 Testing, tolerances and Acceptance.

a) The materials should pass all tests and tolerance in dimensional, chemical, physical properties should be within the limit as stipulated in relevant I.S. for acceptance. Such materials will be accepted as standard.

b) Payments shall be restricted to standard unit mass, or as specified in the schedule, without making any cost adjustment towards mass or any other properties provided the material pass all the tests and tolerance are within the specified limit.

c) In case of non-standard materials, materials not covered under any I.S specification, such as aluminium sections, the payment shall be made based on the actual unit weight as determined by testing at random sampling.

Post construction Inspection and testing: After completion of work and during the maintenance liability period of contract, the work shall be subjected to "Post construction and testing". In case, if the materials incorporated in the work are found to be inferior, though the sample collected from the materials might have been passed at the time of execution, it shall be the responsibility of the contractor to replace the same without any cost to the department failing which the department may rectify the same at the risk and cost of the contractor or the department may accept the same as sub standard, and cost be adjusted from the outstanding security deposit as per the terms and condition of the contract for the work.

9.1.5 SYSTEM TEST

The soil, waste piping system and rain water should be tested after installation as follows:

(a) **Water Test**

The pipes shall be tested after installation & before the appliances are connected, preferably in sections so as to limit the static head of 4.5m. The pipe shall be filled with water for at least 10 minutes. After filling, pipes shall be struck with a hammer and inspected for blow holes and cracks. Then it will be necessary to seal all openings and leaks at joints immediately as observed during the test and all defective pipes shall be rejected and removed from the site. Pipes with minor sweating shall be accepted at the discretion of the Engineer-in-Charge

© 2022 MECON Limited All rights reserved

(b) **Smoke Test**

Alternatively, the Contractor may test all Soil, Waste and Rainwater stacks by smoke testing machine. The smoke test shall be carried out as under:

Smoke shall be pumped into the stack after plugging all inlets and connections at the lowest points from a smoke testing machine which consists of a bellow & burner. The material usually burnt is greasy cotton waste which gives out a clear pungent smoke which is easily detected by sight as well as by smell, if there is leak at any points of the pipe. The top end shall however be left open. The stack shall then be observed for leakiness and all defective pipes and fittings removed or repaired as directed by the Engineer-in-Charge.

9.2.1 INDIAN WATER CLOSET

9.2.1.01 GENERAL:

The item pertains for providing white or colour glazed vitreous chinaware Indian water closet of size and colour as specified in the schedule including fixing.

9.2.1.02 MATERIAL:

Squatting Pan (Orissa Pattern) is of white or colour glazed vitreous China conforming to IS 2556 Part III. Pan shall have flushing rim and are inlet of self draining type. It shall have weep hole at the following inlet to the Pan. The flushing inlet shall be in front unless otherwise specified. The inside of the bottom of the pan shall have sufficient slope from the front to the outlet and surface shall be uniform and smooth to enable easy and quick disposal while flushing. The exterior surface of the outlet below the flange shall be an unglazed surface which shall have groove at right angle to the axis of the outlet. In all the cases pan shall have be provided with 100mm Glazed Vitreous China ‘P’ or ‘S’ trap with 50 mm water seal and 40 mm size vent.

9.2.1.03 FIXING:

The water closet pan shall be placed in position as shown in the drawing. The IWC shall be supported on brick masonry in CM 1:4 or as directed by the Engineer-in-charge. The pan shall be fixed slightly lower than the floor level. If the pan or trap is damaged during handling of fixing, it shall be replaced by the contractor at his own cost. The pan, trap and CI. pipe shall be jointed in 1:1 Cement Mortar with hemp yarn caulked. The gap between W.C. and floor shall be finished with white/matching cement as directed,

9.2.1.04 PROTECTION AND FINAL CLEANING:

The IWC shall be covered with husk and sand till all the civil and electrical

© 2022 MECON Limited All rights reserved

works are completed and shall be removed and cleaned on completion of civil and electrical works prior to testing and handing over. However, the contractor should ensure that the out let is plugged with gunny bags or similar materials to avoid the pipe getting blocked.

9.2.1.05 THE RATE INCLUDES FOR:

1. Water Closet pan with trap 'P' or 'S' type and jointing in 1:1 cement mortar with hemp yarn caulked.
2. Cutting wall / slab / beam etc. and making all the damage goods to original condition after completion of work.
3. Testing the entire system and rectification of defects, if any.
4. All necessary labour, material and use of tools.

9.2.1.06 MODE OF MEASUREMENT:

The measurement shall be for each unit of W.C. Pan fixed.

9.2.2 EUROPEAN OR ANGLO INDIA WATER CLOSET:

9.2.2.01 GENERAL:

The item pertains for providing white or colour glazed vitreous chinaware European or Anglo Indian water closet with seat and cover of size and colour as specified in the schedule including fixing.

9.2.2.02 MATERIAL:

European type water closet shall be wash down pattern unless otherwise specified. Water closet shall be vitreous china conforming to 1S 2556 (Part-I & II). The closet shall be of one piece construction and shall have minimum two hole of 6.5 mm diameter for fixing closet to floor. Closet shall have an integral flushing rims of self draining type. Each water closet shall have an integral trap with either 'S' or 'P' outlet with and trap shall be uniform and smooth in order to enable an efficient flush. Plastic seat and cover shall be of black colour or as specified. They shall have conformity to IS 2548 Part I & II.

9.2.2.03 FIXING:

The water closet pan shall be placed in position as shown in the drawing. If the pan trap is damaged during handling or fixing, it shall be replaced by the contractor at his own cost. The pan, soil pipe shall be jointed in 1:1 Cement Mortar with hemp yarn caulked. The gap between W.C. and floor shall be finished with white/matching cement and sand as directed. Seat and cover shall be fixed to the Pan by two corrosion resistance hinge with 65

© 2022 MECON Limited All rights reserved

mm shank and threaded to within 25 mm from of flange. Seat shall be fixed in level by providing the washers of rubber with non ferrous or stainless steel washer to bolt.

9.2.2.04 THE RATE INCLUDES FOR:

1. European type water closet with an integral 'P' or 'S' trap, plastic seat cover, etc. jointing in 1:1 cement mortar with hemp yarn caulked.

2. Cutting hole in wall / slab / beam etc. wherever required. and making all damages good to original condition after completion of work

3. Testing the entire system and rectification of defect if any.

4. All necessary labour, material and use of tools.

9.2.2.05 MODE OF MEASUREMENT:

The measurement shall be for each unit of W.C. fixed.

9.2.3 WASH BASIN:

9.2.3.01 GENERAL:

The item pertains for providing colour or white glazed vitreous chinaware wash basin with or without pedestal of size and colour as specified in the schedule including fixing.

9.2.3.02 MATERIAL:

Wash basins shall be of vitreous china conforming to IS: 2556(Part- IV) of flat back or angle back as specified shall be of one piece construction including combined over flow, basin shall be provided with single or double tap holes of size 28 mm square or 30 mm rounded. Each basin shall have circular waste hole, or 5 sq.cm slot type over flow. Pedestals for wash basin shall be exactly of the same glazing that of basin. Pedestal shall be capable of supporting the basin and completely recessed at the back to accommodate supply and waste pipes and fittings. The basin shall be supported on pan of C.I cantilever brackets conforming to IS 775. Use of MS angle or Tee Section as bracket is not permitted.

9.2.3.03 FIXING

The wash basin shall be fixed in position as indicated in the drawing. Basin shall be supported on a pair of C.I brackets which is embedded in cement concrete (1:2:4) block 100 x 75 x 150 mm or with the anchor fastner.

© 2022 MECON Limited All rights reserved

Oval shape or round shape wash basins are required to be fixed in polished granite slabs either fully sunk in stone top or flush with slab.

The wall plaster on seat shall be cut to rest over the top edge of the basin so as not to leave any gap for water seepage through between wall plaster & skirting of basin. The gap between basin and wall shall be finished with white matching cement.

9.2.3.04 THE RATE INCLUDES FOR:

1. Wash Basin with pair of C.I bracket as required.
2. Cutting hole in wall / slab / beam etc. wherever required. and making all damages good to original condition after completion of work.
3. All necessary material, labour and use of tools.

9.2.3.05 MODE OF MEASUREMENT:

The measurement shall be for each unit of wash basing fixed,

9.2.4 URINAL:

9.2.4.01 GENERAL: The item pertains to providing colour or white glazed vitreous chinaware urinal in single or range (1,2 & 3) and size as specified in the schedule with necessary fittings and appliances including fixing.

9.2.4.02 MATERIAL:

9.2.4.02.1 LARGE FLAT BACK TYPE (WITH FLUSHING RIM):

Urinal basin shall be flat back type lipped in front, the vitreous china conforming to IS 2556 (Part VI). Urinal shall have integral flushing rim and inlet or supply horn for connecting flush pipe. Flushing rim and inlet shall be of the self draining type. At bottom of basin and outlet horn for connecting outlet shall be provided. The inside surface of the urinal shall be uniform and smooth throughout to ensure efficient flushing.

9.2.4.02.2 LARGE FLAT BACK WITHOUT FLUSHING RIM:

They shall be of vitreous china conforming to 1S:2556 (Part-VI) constructed in one piece with providing slot or alternative fixing arrangement at flat back and where the integral flushing rim is not provided, they shall be provided with ridges in side the bowl to divert towards the front line of the urinal.

9.2.4.02.3 STALL URINALS:

© 2022 MECON Limited All rights reserved

The stall urinal and its screen shall be glazed fire clay conforming IS:771 (Part-Ill, Sec-2). The inside surface of stall and screen shall be regular and smooth throughout to ensure efficient flushing.

9.2.4.02.4 CP BRASS FLUSH PIPE:

The flushing arrangement to urinals for single or in range shall be of CP brass with CP brass spreader of 15 mm dia conforming to IS: 407.

9.2.4.03 FIXING:

9.2.4.03.1 LARGE FLAT BACK URINAL WITHOUT FLUSHING RIM

(Single or Range): Urinal shall be fixed in position by using rawl plug, wooden plug, C.P screws etc. It shall be fixed at height of 65 cm from the standing level to the top of the lip of urinal or as directed by the Engineer-in-charge. Each urinal shall be connected with 32 mm size waste pipe which shall discharge into channel or a floor trap.

9.2.4.03.2 STALL URINALS:

The lip of the stall urinal shall be flush with the finished floor level. The stall urinal shall be laid over a fine sand cushion on average 25 mm thickness. The gap between wall surface, finished floor level and urinals shall not be more than 3mm and filled with water proofing plastic compound.

9.2.4.03.3 CP BRASS FLUSHING ARRANGEMENT:

The flushing arrangement to urinal in single or in range shall be of CP brass from 25 mm dia to 15 mm dia and CP brass spreader of 15 mm size to each urinal including the cost of CP brass elbows, tees, coupling, crosses, clamps, clips, union CP brass check nut and screws etc. CP brass.

9.2.4.04 THE RATE INCLUDES FOR:

1. Glazed Urinals(single or in range) and CP brass pipe flushing arrangement including the cost of jointing material.
2. Cutting hole wherever required and making all damage good to original condition after completion of work.
3. Testing the entire system and rectification of defects if any.
4. All necessary materials, labour and use of tools.

9.2.4.05 MODE OF MEASUREMENT:

The measurement shall be for each unit of urinal set (single or range) fixed.

© 2022 MECON Limited All rights reserved

9.2.5 URINAL SOUATTING PLATE:

9.2.5.01 Material:

The squatting plates shall be of white vitreous china conforming to IS 2556 (Part-I), IS: 2556 (Part-VI) with internal flushing rim with front or side inlet. Each squatting plate shall have integral longitudinal flush pipe. These shall be of 100 mm dia white glazed vitreous china channel with slope and outlet piece in front.

9.2.5.02 FIXING:

The plate shall be fixed in position. The top edge of squatting plate shall be flush with the finished floor level adjacent to it. It shall be embedded on a layer of 25 mm thick cement mortar 1:6 laid over a bed of cement concrete 1:3:6. Gap between wall, floor etc. shall be finished with white/matching cement.

9.2.5.03 THE RATE INCLUDES FOR:

1. Urinals (single or in range) /squatting plate.
2. Cutting hole wherever required and making all damage good to original condition after completion of work.
3. Testing the entire system and rectification of defects if any.
4. All necessary materials, labour and use of tools.

9.2.5.04 MODE OF MEASUREMENT:

The measurement shall be for each unit of squatting plate (single or range) fixed.

9.2.6 MARBLE / GRANITE PARTITION:

9.2.6.01 GENERAL:

The item pertains for providing marble / granite partition of size and colour as specified in the schedule including fixing.

9.2.6.02 MATERIAL:

The partition shall be of marble/granite slab of size & thickness as specified in the schedule, it shall be polished on both sides with exposed to proper shape the exposed edges of Marble/granite shall be made smooth corners rounded. Cracked or damaged marble/granite slab shall not be used in the work and shall be replaced if any by the contractor at his own cost and charges +/- 3mm tolerance shall be permissible for thickness of slab.

© 2022 MECON Limited All rights reserved

9.2.6.03 FIXING:

Partition shall be fixed vertically in position as indicated in the drawing at proper height. 100 mm wide chases shall be cut in the wall and the partition shall be embedded at least 50 mm in the wall using 1:2:4 cement concrete. After fixing the partition slab, the chases cut in the wall shall be made good to original condition.

9.2.6.04 THE RATE INCLUDES FOR:

1. Marble/granite partition slab including cost of cement concrete, cement mortar etc.

2. All necessary labour, material and use of tools.

9.2.6.05 MODE OF MEASUREMENT:

The measurement shall be for each sqm of marble/granite partition fixed.

9.2.7 DIVISION PLATE / PARTITION PLATE:

9.2.7.01 GENERAL:

The item pertains for providing white or colour glazed vitreous chinaware division plate of size and colour as specified in the schedule including fixing.

9.2.7.02 MATERIAL:

Division plate shall be white or colour glazed of size as specified in the schedule, and shall conform to IS .2556 Part VI.

9.2.7.03 FIXING:

Division plate shall be fixed vertically in position at proper height with expandable anchor fasteners, CP brass screws, wooden plugs etc.

9.2.7.04 THE RATE INCLUDES FOR:

1. Glazed division plate including the cost of CP brass screws, wooden plugs, expandable anchor fasteners etc.

2. All necessary labour, material and use of tools.

9.2.7.05 MODE OF MESUREMENT:

The measurement shall be for each unit of division plate fixed,

9.2.8 HALF ROUND CHANNEL:

© 2022 MECON Limited All rights reserved

9.2.8.01 GENERAL:

The item pertains for providing colour or white glazed vitreous chinaware half round channel of size and colour as specified in the schedule including laying and fixing.

9.2.8.02 MATERIAL:

The half round channel shall be of white or colour glazed vitreous chinaware of size as mentioned in the schedule with or without dead end and shall conform to IS 2556 part VII.

9.2.8.03 FIXING:

The channel shall be laid to the correct alignment to required slope. It shall be fixed on 80 mm thick bed of 1:2:4 cement concrete. The channel shall be used in standard length. Pieces are not allow except where it is necessary to make up exact length. The joint and gap shall be finished with white / matching colour cement.

9.2.8.04 THE RATE INCLUDES FOR:

1. Cement concrete, cutting the channel and wastage etc.

2. Supplying & fixing vitreous china half round channel

3, All necessary labour, material and used of tools.

9.2.8.05 MODE OF MEASUREMENT:

The measurement shall be for unit running meter length of half round channel of specified diameter fixed.

9.2.9 GLAZED FLOOR TRAP WITH DOME SHAPED GRATING:

9.2.9.01 GENERAL:

The item pertains for providing white glazed vitreous chinaware floor trap with dome shaped C.P. Brass grating of size as specified in the schedule including fixing.

9.2.9.02 MATERIAL:

The trap shape be of white vitreous chinaware of 100 mm dia. or as specified in the schedule with hinged type dome shaped grating of chromium plated brass or stainless steel as specified.

9.2.9.03 FIXING:

© 2022 MECON Limited All rights reserved

The trap shall be laid to the correct alignment and to required slope. The trap shall be fixed on 80 mm thick bed or 1:2:4 cement concrete. The caulking shall be done using 1:1 cement concrete. The caulking shall be done using 1:1 cement mortar and hemp yarn.

9.2.9.04 THE RATE INCLUDES FOR:

1. Floor trap, dome shaped grating, concrete, cement mortar etc.
2. Caulking with 1:1 cement mortar with hemp yarn.
3. All necessary labour, material and use of tools.

9.2.9.05 MODE OF MEASUREMENT:

The measurement shall be for each unit of floor trap fixed.

9.2.10 TOILET PAPER ROLL HOLDER:

9.2.10.01 GENERAL:

The item includes providing white or colour glazed vitreous chinaware toilet roll holder of size as mentioned in the schedule including fixing.

9.2.10.02 MATERIAL:

The toilet paper roll holder shall be of CP brass or vitreous china on specified and of size and design as approved by the Engineer-in-charge. Toilet paper roll holder shall conform to IS standard and should have ISI mark.

9.2.10.03 FIXING:

Toilet paper roll holder shall be fixed in position by means of C.P brass covers and rawl plug embedded in the wall. Vitreous china toilet paper roll holder shall be fixed into the wall with 1:2 cement mortar. The pocket shall be cut in wall for toilet paper roll holder if not left finishing the gap with white/matching cement.

9.2.10.04 THE RATE INCLUDES FOR:

1. Toilet paper roll holder, cement, sand, curing etc.
2. Cutting the pocket if they are not left.
3. All necessary labour, material and use of tools.

© 2022 MECON Limited All rights reserved

9.2.10.05 MODE OF MEASUREMENT:

The measurement shall be for each unit of toilet paper roll holder fixed.

9.2.11 PVC WATER INLET CONNECTION:

9.2.11.01 GENERAL:

The item pertains to providing colour or white PVC water inlet connection for cistern and wash basins,

9.2.11.02 MATERIAL:

PVC water inlet connection shall conform to IS specifications and shall be of standard pattern with nylon insulation of minimum 450 mm long with CP brass check nut at both the ends and shall be able to withstand the testing pressure of 1 MPa (10 kg/sq.cm.)

9.2.11.03 FIXING:

The PVC water inlet connection shall be fixed in position as indicated in the drawing or as directed by the Engineer-in-charge for flushing cistern and wash basins.

9.2.11.04 THE RATE INCLUDES FOR:

1 Supplying and fixing of PVC water inlet connection.

2 All necessary labour, material and use of tools.

9.2.11.05 MODE OF MEASUREMENT:

The measurement shall be for each unit of water inlet connection fixed.

9.2.12 GLAZED FIRE-CLAY/ VITREOUS CHINA SINK:

9.2.12.01 GENERAL:

Item includes providing white or colour glazed -fire clay sink for kitchen or vitreous china sink for lab as specified in the schedule of quantities including fixing.

9.2.12.02 MATERIAL:

Laboratory sink shall be of vitreous china confirming to IS 2556 (PART-V) and kitchen sink shall be of glazed fire-clay conforming to 1S 771 (Part-II) and shall have combined over flow of the weir type and invert shall be 30 mm below the top edge. These shall be of one piece construction and floor of sink shall gently slope towards the outlet, The outlet of sink should be

© 2022 MECON Limited All rights reserved

suitable for waste fitting having flanges 88 mm diameter and waste hole of 65 mm diameter. the waster hole shall be either rebated or beveled having the depth of 10 mm. C.I brackets for supporting sink shall confirm to relevant IS.

9.2.12.03 FIXING:

The sink shall be supported on C.I cantilever brackets, embedded in cement concrete 1:2:4 block of size 100 x 75 x 150 mm. Bracket shall be fixed in the position before dado work is done. The height of front edge of sink from floor level shall be 80 cm or as directed by the Engineer-in-charge. The gap between floor/wall and sink shall finish with white cement.

9.2.12.04 THE RATE INCLUDES FOR:

1. Sink & C.I brackets (Pair) cement, sand etc.
2. All necessary labour, material and use of tools.

9.2.12.05 MODE OF MEASUREMENT:

The measurement shall be for each unit of sink fixed.

9.2.13 STAINLESS STEEL SINK:

9.2.13.01 GENERAL:

Item includes providing the stainless steel sink with or without drain board of size as specified in the schedule including fixing.

9.2.13.02 MATERIAL:

The sink shall be manufactured from stainless steel of Salem or equivalent steel conforming to IS: 13983. Stainless steel sink shall be of one piece construction moulded out of 19 SWG (1mm) stainless steel sheet of grade AISI 304 (18/8) with stainless steel choke — stop strainer (waste coupling) checknuts conforming to IS 13983.

9.2.13.03 FIXING:

The sink shall be fixed in position as indicated in the drawing. The sink shall be placed over the brackets or on the platform. Gap between sink and platform / wall shall be finished with white/ matching cement.

9.2.13.04 THE RATE INCLUDES FOR:

1. S.S. sink with waste coupling cement sand etc.
2. All necessary labour, material and use of tools.

© 2022 MECON Limited All rights reserved

9.2.13.05 MODE OF MEASUREMENT:

The measurement shall be for each unit of SS sink fixed.

9.2.14 SINK DRAIN BOARD:

9.2.14.01 GENERAL: The item includes providing white or colour glazed / fire clay drain board of size mentioned in the schedule fixing.

9.2.14.02 MATERIAL: The drain board shall be manufactured from stainless steel of Salem or equivalent steel conforming to IS: 13983. Stainless steel sink shall be of one piece construction and its thickness not less than 1 mm.

9.2.14.03 FIXING: The drain board shall be fixed in the position as indicated in the drawing. It shall be place over the brackets or on the platform. Gap between board and platform / wall shall be finished with white /matching cement.

9.2.14.04 THE RATE INCLUDES FOR:

1. Drain board, cement, sand etc.
2. All necessary labour, material and use of tools.

9.2.14.05 MODE OF MEASUREMENT: The measurement shall be for each unit of drain board fixed.

9.2.15 SOAP DISH:

9.2.15.01 GENERAL: The item includes providing white or colour glazed chinaware type soap dish of size as mentioned in the schedule including fixing.

9.2.15.02 MATERIAL:. Soap Dish shall be of CP brass or vitreous China on specified and of size, design an approved by the Engineer-in-charge. Soap Dish shall conform to relevant IS standard and should have ISI certification mark.

9.2.15.03 FIXING: Soap Dish shall be fixed in position by means of C.P brass covers and rawl plug embedded in the wall. Vitreous china Soap Dish shall fixed into the wall with 1:2 cement mortar. The pocket shall be cut in wall, if not left, finishing the gap with white/matching cement.

9.2.15.04 THE RATE INCLUDES FOR:

1. Soap dish, cement, sand, curing etc.
2. Cutting the pocket if they are not left.
3. All necessary labour, material and the use of tools.

© 2022 MECON Limited All rights reserved

9.2.15.05 **MODE OF MEASUREMENT:** The measurement shall be for each unit of soap dish fixed.

9.2.16 **GLASS MIRROR:**

9.2.16.01 **GENERAL:** The item providing beveled or plain edges mirror with or without frame of size as mentioned in the schedule including fixing.

9.2.16.02 **MATERIAL:** The mirror shall be of superior float glass with edges rounded off or beveled, size 600 x 450 mm unless specified in the schedule. It shall be free from flaws, specks or bubbles and thickness plated and should not be less than 5.0 mm. The back of mirror shall be uniformly silver plated and should be free from silvering defects. Silvering shall now have a protective uniform covering of red lead paint, where beveled edge mirror are not available. Fancy looking mirrors with PVC beading/border or aluminum beading or stainless steel beading/border based on manufacturer's specification, provided nothing extra shall be paid on this account. The backing of mirror shall be provided with 6mm thick marine plywood or environmentally friendly material other than asbestos cement sheet.

9.2.16.03 **FIXING:** Mirror shall be fixed in position with 6mm thick marine ply wood backing or 6mm thick cement board. It shall be fixed by means of 4 nos. of CP brass screws & caps over rubber washers and rawl plug or as per the manufacturer's specification unless specified otherwise the longer side shall be fixed horizontally.

9.2.16.04 **THE RATE INCLUDES FOR:**

1. Glass mirror with plywood backing CP screws and CP caps etc.
2. All necessary labour material and the use of tools.

9.2.16.05 **MODE OF MEASUREMENT:** The measurement shall be for unit square meter or each unit to glass mirror of size as specified in the schedule.

9.2.17 **GLASS SHELF:**

9.2.17.01 **GENERAL:** The item includes providing glass shelf of size as mentioned in the schedule including fixing.

9.2.17.02 **MATERIAL:** Glass shelf shall consist of an assembly of glass shelf frame of size as specified in the schedule. It shall be with a pair of CP Brass brackets fixed to the wall with CP screws and CP brass rails allround with guard bar of 6 mm diameter fixed to the glass shelf frame with five numbers CP brass brackets. . The glass shall not be less than 5 mm thick. PVC stainless steel shelf or as per manufacturer's specification and size as specified in the schedule of work shall be provided.

© 2022 MECON Limited All rights reserved

9.2.17.03 **FIXING:** The complete accessories shall be fixed to proper line and level as indicated in drawing with 40 mm long CP brass screws, wooden rawl plug, drilling hole and making good the wall to original condition after fixing the glass shelf.

9.2.17.04 **THE RATE INCLUDES FOR:**

1. Glass shelf with glass, CP bracket, guard bars, CP screws etc.
2. All necessary labour material and the use of tools.

9.2.17.05 **MODE OF MEASUREMENT:** The measurement shall be for each unit of glass shelf fixed.

9.2.18 **LIQUID SOAP DISPENSER:**

9.2.18.01 **GENERAL:** The item includes providing CP Brass or Stainless Steel liquid soap dispenser of shape as mentioned in the schedule including fixing.

9.2.18.02 **MATERIAL:** Liquid Soap Dispenser shall be of C.P brass or Stainless Steel of heavy quality and from list of approved make.

9.2.18.03 **FIXING:** The liquid soap dispenser shall be fixed to proper height and level as indicated in drawing with 40 mm long CP brass screws, wooden rawl plug, drilling hole etc. and making good the wall to original condition after fixing.

9.2.18.04 **THE RATE INCLUDES FOR:**

1. Liquid soap dispenser with CP brackets CP screws etc.
2. All necessary labour, material and the use of tools.

9.2.18.05 **MODE OF MEASUREMENT:** The measurement shall be for each unit of liquid soap dispenser fixed.

9.2.19 **TOWEL ROD /TOWEL RING:**

9.2.19.01 **GENERAL:** The item includes providing Towel rod / towel ring of size as mentioned in the schedule including fixing.

9.2.19.02 **MATERIAL:** Towel rail shall be of C.P brass with two CP brass bracket coated with chromium plating of thickness not less than grade No.2 of IS 4827. The size of rail shall be 600 mm x 20 mm dia unless otherwise specified in the schedule. Towel ring of CP brass with one CP brass bracket with thickness not less than Grade No.2 of IS 4827. The diameter of the ring shall be 175 mm unless otherwise specified in the schedule. The diameter of ring rod shall not be less than 8 mm.

© 2022 MECON Limited All rights reserved

9.2.19.03 **FIXING:** The towel rod/ ring shall be fixed to proper line and level as indicated in drawing with CP brass screws, wooden raw plug, drilling hole etc. and making good the wall to original condition after fixing the towel rod.

9.2.19.04 **THE RATE INCLUDES FOR:**

1. Towel rod rail/ring CP brackets & screws etc.
2. All necessary labour, material and the use tools.

9.2.19.05 **MODE OF MEASUREMENT:** The measurement shall be for each unit of towel rod fixed.

9.2.20 **SHOWER ROSE:**

9.2.20.01 **GENERAL:** The item pertains to provide chromium plated brass shower rose of specified diameter with accessories including fixing.

9.2.20.02 **MATERIAL:** The shower rose shall be CP brass of approved and heavy quality. It's accessories shall conform to IS 1239 Part II.

9.2.20.03 **FIXING:** Shower rose shall be fixed to be water supply pipe line with necessary G.I fittings etc. as required by the Engineer-in-charge. Jointing shall be done with the zinc, spun yarn etc. A few turns of fine hemp yarn dipped in linseed oil shall be taken over the threaded ends to obtain complete water tightness. Leaky joint shall be remade to make it leak proof at his risk & cost.

9.2.20.04 **THE RATE INCLUDES FOR:**

1. Shower rose, bend, socket, union/nuts, nipple etc.
2. All necessary labour, material and the use of tools.

9.2.20.05 **MODE OF MEASUREMENT:** The measurement shall be for each unit of shower rose fixed.

9.2.21 **BIB TAP, STOP COCK & ANGLE STOPCOCKS:**

9.2.21.01 **GENERAL:** The item pertains to provide CP brass or PTMT bib tap and stop cock and angle stop cocks, free flanges (if joined to concealed pipe) including fixing.

9.2.21.02 **MATERIAL:** Bib cock (Bib tap) is drawn off tap with a horizontal inlet and free out let and a stop cock is a valve with a suitable means of connections for insertion in a pipe line for controlling or stopping the flow. These shall be of size 15 mm size or as specified and shall be of screw down type. The closing device shall work by means of disc, carrying a

© 2022 MECON Limited All rights reserved

renewable non-metallic washer with shuts against the water pressure on a seating right angles to the axis of the threaded spindle which operates it. The handle shall be crutch, butterfly or fancy design type securely fixed to the spindle. The tap shall open anti clock wise direction.

Brass bib taps and stop cocks and angle stop cocks shall conform to IS 781, they shall be polished bright. The minimum finished weight of different sizes of bib tap weight of 15 mm size bib tap and stop cock shall be as per table given below. They shall be sound and free from taps, blow hole and fitting. Internal & External surface shall be clean, smooth and free from sand and neatly dressed. Taps shall be nickel chromium plated and thickness of coating shall not be less than service grade No.2 of IS 4827 and plating shall be capable of taking high polish which shall not be easily tarnished.

MINIMUM FINISHED MASS OF CP Brass BIB TAPS AND STOP VALVES AS PER IS 781:1984 (Reaffirmed 2001)

Size	Minimum Finished Mass			
	Bib taps	Stop Valves		
		Internally threaded	Externally threaded	Mixed end
1	2	3	4	5
mm	Kg	Kg	Kg	Kg
8	0.250	0.220	0.250	0.235
10	0.330	0.330	0.350	0.325
15	0.400	0.330	0.400	0.365
20	0.750	0.675	0.750	0.710
25	1.250	1.180	1.300	1.250
32	-	1.680	1.800	1.750
40	-	2.090	2.250	2.170
50	-	3.700	3.850	3.750

Every tap complete with its component shall withstand an internally applied hydraulic pressure of 2 MPa (20 kg/sq.cm) maintained for a period of 2

© 2022 MECON Limited All rights reserved

minutes during the period it shall neither leak nor sweat. Leaky joint shall be remade to make it leak proof without any extra cost from contractor.

9.2.21.04 **FIXING:** Bib tap stop cock shall be fixed to the pipe line with C.P. brass or G.I. specials, if required or as ordered by Engineer-in-charge. Jointing shall be done with white zinc, spun yarn etc. A few turns of fine hemp yarn dipped in linseed oil shall be taken over the threaded ends to obtain complete water tightness.

9.2.21.04 **THE RATE INCLUDES FOR:**

1. Bib tap and stop cock, special etc.
2. All necessary labour, material and the use of tools.

9.2.21.05 **MODE OF MEASUREMENT:** The measurement shall be for each unit of bib tap and stop cock fixed.

9.2.22 **COMBINATION TAP ASSEMBLY (WALL/ PILLAR MOUNTED):**

9.2.22.01 **GENERAL:** The item pertains to provide chromium plated brass combination tap assembly, wall mounted hot & cold mixing for bath, pillar mounted hot & cold mixing for sink ,basin, tub etc. including free flanges and fixing.

9.2.22.02 **MATERIAL:** The combination tap assembly shall be 15 mm nominal size or as specified in the schedule. It shall be of C.P. brass approved and heavy quality, and shall conform to I.S. 8931.

Combination tap assembly shall be chromium plated-brass and shall conform to IS 8931.The nominal size of combination tap assembly shall be 15 mm nominal size or as specified. Casting of combination tap assembly shall be sound and free from laps, blow hole and pitting. External and internal surface shall be clean, smooth and free from sand and be neatly dressed. All the parts fitted to pillar tap shall be axial, parallel and cylindrical with surfaces smoothly finished. Thickness of C.P coating shall not be less than service grade no.2 of IS 4827 and plating should be capable of taking high polish which shall not easily tarnish or scale.

9.2.22.03 **TESTING:** Combination tap assembly shall withstand and internally applied hydraulic pressure of 1.6Mpa (16 kg/ sq.cm) for period of 1 minutes during which, it shall neither leak nor sweat. Leaky joint shall be remade to make it leak proof.

9.2.22.04 **FIXING:** Combination tap assembly shall be fixed to the pipe line as indicated in the drawing with necessary special as required or as ordered by Engineer-in-charge. Jointing shall be done with white zinc, spun yarn etc. A few turns of fine hemp yarn dipped in linseed oil shall be taken over the

© 2022 MECON Limited All rights reserved

threaded ends to obtain complete water tightness.

9.2.22.05 THE RATE INCLUDES FOR:

1. Combination tap assembly (wall mounted / pillar mounted as specified in the schedule of work) including free flanges and fixing.
2. All necessary labour, material and the use of tools.

9.2.22.06 MODE OF MEASUREMENT: The measurement shall be for each unit of combination tap assembly fixed.

9.2.23 PILLAR TAP

9.2.23.01 GENERAL: The item pertains to provide chromium plated brass pillar tap or PTMT including fixing.

9.2.23.02 MATERIAL: The pillar tap shall be 15 mm nominal size or as specified in the schedule. Fancy type pillar tap shall be of C.P. brass conforming to I.S.8931 or PTMT of approved quality. Non fancy pillar tap shall be chromium plated-brass and shall conform to IS 1795. The nominal size of Pillar tap shall be 15 mm or as specified.

Casting of Pillar tap shall be sound and free from laps, blow hole and pitting. External and internal surface shall be clean, smooth and free from sand and be neatly dressed. All the parts fitted to pillar tap shall be axial, parallel and cylindrical with surfaces smoothly finished. The minimum of finish weight of Pillar tap shall not be less than 650 grams (body weight 250 gms, washer plate loose valve 150 gms and back nut 40 gms. Thickness of C.P coating shall not be less than service grade no.2 of IS 4827 and plating should be capable of taking high polish which shall not easily tarnish or scale.

9.2.23.03 TESTING: Pillar tap shall withstand and internally applied hydraulic pressure of 2 MPa (20 kg/sq.cm) for period of 2 minutes during which period, it shall neither leak nor sweat. Leaky joint shall be remade to make it leak proof without any extra cost from the contractor.

9.2.23.04 FIXING: Pillar tap shall be fixed to the pipe line as indicated in the drawing with necessary special as required or as ordered by Engineer-in-charge. Jointing shall be done with white zinc, spun yarn etc. A few turns of fine hemp yarn dipped in linseed oil shall be taken over the threaded ends to obtain complete water tightness.

9.2.23.05 THE RATE INCLUDES FOR:

1. Pillar tap including fixing.
2. All necessary labour, material and the use of tools.

© 2022 MECON Limited All rights reserved

9.2.23.06 **MODE OF MEASUREMENT:** The measurement shall be for each unit of pillar tap fixed.

9.2.24 **FLUSH VALVE:**

9.2.24.01 **GENERAL:** The items pertains to provide chromium plated brass or PTMT flush valve or a brass concealed type flush valve with necessary accessories including fixing. (Free flanges if joined to concealed pipes)

9.2.24.02 **MATERIAL:** The Flush valve shall be nominal diameter as specified in the schedule of quantities. It shall be of C.P. brass approved and heavy quality, and shall conform to IS. 9758. The fresh valve shall have working pressure of 0.15 to 0.5 MPa. The valve shall be tested to a Hydraulic pressure of 2 MPa for 2 minutes.

9.2.24.03 **FIXING:** Flush value shall be fixed to the pipe line as indicated in the drawing with necessary special as required or as ordered by Engineer-in-charge. Jointing shall be done with white zinc, sun yarn etc. A few turns of fine hemp yearn dipped in linseed oil shall be taken over the threaded ends to obtain complete water tightness. Leaky joint shall be remade to make it leak proof.

9.2.24.04 **THE RATE INCLUDES FOR:**

1. Flush valve, connecting pipe, socket, union, nipple, wall flanges if connected to concealed pipe.

2. All necessary labour, material and the use of tools.

9.2.24.05 **MODE OF MEASUREMENT:** The measurement shall be for each unit of flush valve fixed.

9.2.25 **WASTE COUPLING:**

9.2.25.01 **GENERAL:** The item pertains to providing chromium plated brass or PTMT waste coupling including fixing.

9.2.25.02 **MATERIAL:** Waste Coupling shall confirm to IS 3311. Waste fittings shall be of CP with thickness of CP coating not less than service Grade No.2 of IS 4827 which is capable of receiving polish and will not easily scale off. The fitting shall conform in all respect to IS 2963 and shall sound, free from laps below, holes and fittings and other manufacturing defects. External and internal surface shall be clean and smooth. They shall be neatly dressed. The waste fitting for wash basin shall be of nominal size of 32 mm and for sink shall be nominal size 50 mm.

9.2.25.03 **FIXING:** Waste coupling shall be fixed to wash basin, sink or urinal as ordered with necessary specials. Jointing shall be done with white zinc,

© 2022 MECON Limited All rights reserved

yarn etc. A few turns of fine hemp yarn dipped in the linseed oil shall be taken over the threaded ends to obtain complete water tightness. Leaky joint shall be remade to make it leak proof.

9.2.25.04 THE RATE INCLUDES FOR:

1. Waste coupling with necessary specials.

2. All necessary labour, material and the use of tools,

9.2.25.5 MODE OF MEASUREMENT: The measurement shall be for each unit of waste coupling fixed.

9.2.26 BOTTLE TRAP:

9.2.26.01 GENERAL: The item pertains to provide chromium plated brass or PTMT bottle trap including fixing.

9.2.26.02 MATERIAL: Bottle trap shall be of C.P with thickness of CP coating not less than service grade No. 2 of 1S 4827 which is capable of receiving polish and will not easily scale off. The fitting shall conform in all respect of IS 2963 and shall be sound, free from laps below, holes and fittings and other manufacturing defects. External and internal surface shall be clean and smooth. They shall be neatly dressed and be truly machined so that nut smoothly moves on the body. The Bottle trap for wash basin shall be of nominal size of 32 mm and for sink shall be nominal size 50 mm.

9.2.26.03 FIXING: Bottle trap shall be fixed to wash basin, sink or urinal as indicated in the drawing with necessary specials or as ordered by the Engineer-in-charge. Jointing shall be done with white zinc, spun yarn etc. A few turns of fine hemp yarn dipped in linseed oil shall be taken over the threaded ends to obtain complete water tightness. Leaky joint shall remade to make it leak proof.

9.2.26.04 THE RATE INCLUDES FOR:

1. Bottle trap with necessary specials.

2. All necessary labour, material and the use of tools.

9.2.26.05 MODE OF MEASUREMENT: The measurement shall be for each unit of bottle trap fixed.

9.2.27 COAT AND HAT HOOK:

9.2.27.01 GENERAL: The item pertains to provide chromium plated brass or PTMT coat and hat hook including fixing.

9.2.27.02 MATERIAL: Coat & hat Hook shall be of three way type of approved and

© 2022 MECON Limited All rights reserved

heavy quality. Coat & Hat Hook shall be CP brass and two/three way hook type or as specified in the BOQ. CP coating shall not be less than service grade No.2 of 1S 4827.

9.2.27.03 **FIXING**: The Coat and hat hook shall be fixed to proper line & level as indicated in drawing with CP brass screws.

9.2.27.04 **THE RATE INCLUDES FOR:**

1. Coat and hat hook with CP screws etc.

2. All necessary labour, material and the use of tools.

9.2.27.05 **MODE OF MEASUREMENT:** The measurement shall be for each unit of coat and hat book fixed.

9.2.28 **FLUSHING CISTERN:**

9.2.28.01 **GENERAL:** The item pertains to provide white or colour glazed chinaware / PVC flushing cistern with all inside syphonic fitting including fixing.

9.2.28.02 **MATERIAL:** The flushing cistern shall be automatic or manually of rates high level or low level as specified for water closets and urinals.

Cisterns shall be of vitreous china conforming to IS 2326 for Automatic flushing cistern and Plastic (IS 7231). Cistern shall be mosquito proof. All working parts shall be designed to operate smoothly and efficiently. The cistern shall have removable covers which shall fit closely on it and be screwed against top displacement where operating mechanism is attached to the cover. This may be made in two sections, but the section supporting the mechanism shall be securely fitted or screwed to the body. The outlet fittinq of the cistern shall be securely connected to the cistern. The nominal internal diameter of the cistern outlet shall not be less than 32 mm and 38 mm for high level and low level respectively. Length of outlet cistern shall be 37 +/-2 mm. Ball valve shall be screwed type 15 mm in diameter and shall confirm of IS 1703. The flat shall be made of polyethylene as specified in IS 9762. A low level cistern with maximum height of 30 cm between the top of the pan and under side of the cistern. In case of low level cistern handle shall be of CP brass. In case of Plastic cistern, operation of cistern shall be through Push Button at the top for dual system and beyond plastic handle.

The discharge rate of the cistern as per IS 774 shall be 10 +/- .5 litres 6 second and 5 +/-.5 litres in 3 second for cistern capacity 10 ltrs. and S ltrs. respectively. Flush pipe shall be of class ‘B’ G.I pipe of 32 +/- mm diameter for high level. Polyethylene flush pipe shall be low density confirming to IS 3076 or high density confirming to IS 4984 or UPVC pipe confirming to IS 4965 of 40 mm outer diameter.

© 2022 MECON Limited All rights reserved

Over flow pipe shall not be less than +/- 5mm 'B' diameter. It shall be of G.I valve with mosquito proof jalli of 1.25mm dia.

9.2.28.03 **FIXING:** The chinaware flushing cistern shall be placed over a pair of CI. brackets. C.P. brass flush pipe shall be fixed to cistern and W.C. pan using check nut, spun yarn, cement mortar etc.

The cast iron flushing cistern shall be placed over a pair of C.I. or G.I. or PVC flush pipe of specified diameter shall be fixed to cistern and W.C. pan by using check nut, white zinc, spun yarn, cement mortar etc.

The PVC flushing cistern shall be placed or fixed as recommended by the manufacturer, PVC flush pipe of specified diameter shall be fixed to cistern and W.C. pan by using check nut, white zinc, spun yarn, cement mortar etc.

9.2.28.04 **THE RATE INCLUDES FOR:**

1. Supply and fixing flush tank, flush pipe and over flow pipe.
2. Painting all the metallic parts with two coats of flat oil paint over a coat of primer.
3. Cutting hole in wall / slab / beam etc. wherever required and making good the same to original condition after fixing.
4. Cost of jointing materials such as zinc, spun yarn, cement mortar 1:1 etc.
5. Testing the entire system and rectification of defects, if any.
6. All necessary materials, labour and use of tools.

9.2.28.05 **MODE OF MEASUREMENT:** The measurement shall be for each unit of flushing cistern fixed as a whole.

9.2.29 **BRACKET:**

9.2.29.01 **GENERAL:** The item pertains to provide a pair of bracket for wash basin, sink, Flushing, cistern etc. including fixing.

9.2.29.02 **FIXING:** Brackets shall be embedded into or fixed to the wall with plugs, screws, nails etc. Hole shall be made in the wall, if they are not left for fixing the brackets and shall be made good after fixing. The gap shall be filled with 1:2 cement mortar and finishing shall be done with white / matching colour cement.

9.2.29.03 **THE RATE INCLUDES FOR:**

1. Supplying and fixing the brackets.

© 2022 MECON Limited All rights reserved

2. Painting brackets with two coats of flat oil paint over a coat of primer.

3. Cutting hole in wall beam etc. wherever required and making good the same to original condition after fixing.

4. All necessary materials, labour and use of tools.

9.2.29.04 **MODE OF MEASUREMENT:** The measurement shall be for each pair of bracket fixed included in the items of sink, wash basin, cu etc. as specified in schedule of quantities.

9.3 INSULATION

9.3.1 **GENERAL:** The insulation for hot water pipes shall be done as specified in Drawings and accordingly following guidelines shall be followed:

9.3.2 MATERIAL:

The specifications of the material shall be generally as follows, unless specified:

(a) Fibre glass wool -- Blankets/mats of 50 mm thickness in the density of 24 kg/m3

(b) Elastomeric Flexible Material -- Thermal Insulation tubings of 6mm thickness with density of 60-90 Kg/m3

9.3.3 FIXING

9.3.3.1 For Chased Internal Pipes

Hot water pipes fixed in chase shall be insulated by wrapping 6 mm thick thermal insulation tubings or Ceramic Rope made up of Ceramic fibres laid parallel to each other with stainless steel wire wrapped around for reinforcing the fibre complete as per requirement and finishing it with 6mm rough cement plaster 1:3 mixed with Rapid Hardening Cement.

9.3.3.2 For External Piping

External hot water line laid in trenches, exposed in shafts, on terrace and along ceiling level shall be insulated with either thermal tubings of specified thickness or fibre glass wool blankets/mats, as specified in Drawings. After the insulation, all the pipes shall be protected with either 12mm thick smooth finished cement plaster (two layers of 6 mm thick of mix 1:2 Portland cement and fine sand) or they shall be cladded with 24 SWG aluminum sheet as specified in Drawings.

9.3.5 THE RATE INCLUDES FOR:

© 2022 MECON Limited All rights reserved

(a) Cleaning the pipe surface to be insulated to make it free from dust &oil.

(b) Applying a layer of zinc chromate/anti-rust Japanese primer.

(c) Fixing fibre glass wool blankets or mats/Elastomeric Flexible Tubings as specified.

(d) Covering it alround with 24 gauge x 24 mm wire netting with proper butt joint and tightly wrapped.

(e) Applying two layers of 6 mm thick each cement plaster in the ratio of 1:2 (1cement: 2 fine sand).

(f) Applying weatherproofing coating of Insulkote OR of approved material over the cement plaster.

(g) For certain places, where exposed insulation is not to be plastered, then aluminum foil sheet of 24 gauge with 50 mm overlapping, fixed with self tapping recessed screwed shall be provided.

9.4 WATER SUPPLY SYSTEM:

9.4.1 G.I. PIPING WORK (Exposed):

9.4.1.01 **GENERAL:** The item includes provision of G.I. pipes with G.I. fitting of specified nominal bore and class as mentioned in the schedule including laying, fixing. The G.I. pipes and fittings shall run on the surface of the walls or ceilings unless otherwise specified.

9.4.1.02 **MATERIAL:** The pipes and fittings shall be of M.S. galvanised as specified in the schedule. They shall conform to IS 1239 (P-1). All the pipes and fitting shall have ISI certification mark. The specified nominal bore of the pipe shall refer to inside approximate bore according to the thickness corresponding to outside fixed diameter. The pipe and fittings shall be smooth, sound, free from any imperfections and neatly dressed and fitting shall be able to withstand a hydrostatic test pressure of 5 MPa (50 Kg/cm^2) maintained for at least 3 seconds at manufacturing works (lab test). The table showing the dimensions and different bores of pipes are given below.

9.4.1.03 **LAYING:** The plumbing contractor shall set the layout of the plumbing approved by the Engineer-in-charge as may be required by the bye-laws. Pipes shall be laid in plumb and in straight and parallel lines. When unavoidable, pipes may be buried for short distances provided additional protection is given against damage and where so required joints are not buried. Where directed by the Engineer —in-charge, a M.S. tube sleeve shall be fixed at a place the pipe is passing through a wall or floor for

© 2022 MECON Limited All rights reserved

reception of the pipe and to allow freedom for expansion ,contraction and other movements. In case the pipe is embedded in walls or floors the pipes shall be painted with anticorrosive bitumastic paints of approved quality. The pipe shall not come in contact with mortar or lime concrete as the pipe is affected by lime. Under the floors the pipe shall be laid in layer of sand filling as done under concrete floors.

9.4.1.04 **FIXING:** The entire pipe line shall be fixed in position as shown in the drawing or as directed by the Engineer-in-charge. All pipes shall be fixed truly vertical and horizontal unless unavoidable. The pipe line shall be supported with "U" type G.I. clamps not less than 2 mm thick and G.I. nails not less than 40 mm long, wooden gutties etc keeping the pipe about 15 mm clear of the wall.

Spacing between clamps for fixing internal piping shall be as per IS 2065 — 1983 as given below

Nom. bore of pipe	For Horizontal Runs	For Vertical Runs
15mm	2.0 M	2.5 M
20mm to 32mm	2.5M	3.0M
40 mm to 50 mm	3.OM	3.5M
65 mm to 80mm	3.5M	5.0M

No joints shall be located inside the wall. If the pipe is required to be cut and the end threaded, the burns of the cut end shall be filed smooth and any obstruction in bore shall be entirely eliminated, downtake line shall be provided with union at every floor for easy maintenance. This shall be made of line threaded pipe ends and coupler with checknut to avoid leakage. Die cast union shall not be permitted in the shaft.

9.4.1.05 **JOINTING:** While fixing the pipe line, the joints shall be made by applying a few turns of hemp yarn dipped in linseed oil, which shall be taken over the threaded end of the pipe and socket screwed home using the pipe wrench. The pipes connected shall touch each other and the socket covering each end about equally. The branch connection shall not protrude in the bore of parent pipe.

9.4.1.06 **PAINTING:** G.I. pipes and fittings running exposed shall be painted with two coats of oil paint of approved make and shade over a coat of approved primer.

9.4.1.07 **PRECAUTIONS**

a) All water supply pipes shall be so laid and so fixed and maintained as to be and remain completely water tight.

b) During installation open ends of each pipe shall be protected by suitable covers or plugs so that the ends, thread, sockets or spigot are

© 2022 MECON Limited All rights reserved

not damaged and no foreign materials can make its way into the pipe line.

c) Due care should be taken to ensure that there shall be no cross connection whatsoever between a pipe or fitting for conveying or containing wholesome water and a pipe or fitting containing impure water or water liable to contamination or of an uncertain quality of water which has been used for any other purposes.

d) Fittings and fixtures liable to be stolen shall be fitted and fixed just before testing and handing over.

9.4.1.08 **TESTING:** The pipes and fittings after they are laid and jointed shall be tested to hydraulic pressure of 1 MPa (10 Kg/sq.cm). The pipes shall be slowly and carefully charged with water allowing all air to escape and avoiding all shock or water hammer. The draw off taps and stop cocks shall then be closed and specified hydraulic pressure shall be applied gradually,

Pressure gauge must be accurate and preferably should have been recalibrated before the test. The test pump having been stopped, the test pressure should be maintained without loss for at least 2 (two) hours. The pipes and fittings shall be tested in sections as the work proceeds, having the joints exposed for inspection during the testing. Pipes or fittings which are found leaking shall be replaced and joints found leaking shall be redone, without extra payment.

9.4.1.09 **THE RATE INCLUDES FOR:**

1. Supplying GI pipes and GI fittings such as sockets,elbows, bends, tees, enlargers, reducers, checknuts, plugs, unions etc. of specified diameter & class including hemp yarn, linseed oil, clamps, screws, wooden gutties etc.

2. Laying, jointing and fixing the pipe with fittings including threading, cutting pipes, wastage etc.

3. All necessary materials, labour and use of tools.

9.4.1.10 **MODE OF MEASUREMENT:** The measurement shall be for unit running metre length of pipe line of specified nom. bore laid or fixed and shall be taken along center line of the pipe line.

9.4.2 **G.I. PIPING WORK (Concealed):**

9.4.2.01 **GENERAL:** The item includes provision of G.I. pipes with concealed type fittings of specified nom. bore and class mentioned in the schedule including laying, fixing, wrapping with hessian cloth, painting and testing.

© 2022 MECON Limited All rights reserved

9.4.2.02 **MATERIAL:** Please refer clause 9.4.1.02

9.4.2.03 **CHASES:** Chases of size 75 mm x 75 mm shall be cut in the wall, floor, slab wherever required or as directed by chases cutting machine. After testing the pipe line, the chases shall be filled with cement mortar 1:3 and surface made good to its original condition.

9.4.2.04 **LAYING:** The plumbing contractor shall set the layout of the plumbing as per the standard procedure and approved by the Engineer-In-Charge. Pipes shall be laid in plumb and in straight and parallel lines. No lime plaster or composition containing lime shall be allowed to come in direct contract with the pipe, which are to be concealed as the pipe is affected by lime.

9.4.2.05 **FIXING:** The entire pipe line shall be fixed in position as shown in the drawing or as directed by the Engineer-in-charge. All pipes and fittings, which are to be concealed, shall be properly embedded in the wall, flooring etc. after being treated. No moulding or plaster design or any ornamental plaster work shall be done over the walls or flooring or ceiling where concealed pipes have been laid.

If the pipe is required to be cut and the end threaded, the burns of the cut end shall be filed smooth and any obstruction in bore shall be entirely eliminated.

9.4.2.06 **JOINTING:** Please refer Clause No. 9.4.1.05

9.4.2.07 **PAINTING:** All the concealed piping work shall be thoroughly painted with two coats of anti-corrosive black bitumastic paint of approved quality shade over a coat of approved primer before concealing and filling the mortar.

9. 4.2.08 **PRECAUTIONS**

a) All water supply pipes shall be so laid and so fixed and maintained as to be and remain completely water tight.

b) During installation open ends of each pipe shall be protected by suitable covers or plugs so that the ends, thread, sockets or spigot are not damaged and no foreign materials can make its way into the pipe line.

c) Due care should be taken to ensure that there shall be no cross connection whatsoever between a pipe or fitting for conveying or containing wholesome water and a pipe or fitting containing impure water or water liable to contamination or of an uncertain quality of water which has been used for any other purposes.

d) Fittings and fixtures liable to be stolen shall be fitted and fixed just before testing and handing over.

© 2022 MECON Limited All rights reserved

9.4.2.09 **TESTING:** Please refer clause No. 9.4.1.07

9.4.2.10. **THE RATE INCLUDES FOR:**

1. Supplying GI pipes and concealed type G.I, fittings such as sockets, elbows, bends, tees, enlargers, reducers, checknuts, plugs, unions etc. of specified diameter and class including hemp yarn, linseed oil etc.

2. Laying, jointing and fixing the pipe with fittings including threading, cutting pipes, wastage, etc.

3. Wrapping the cold water pipe line with hessian cloth including painting and testing.

4. Wrapping the hot water pipe line with asbestos cloth.

5. Cutting 75 mm x 75 mm size chases in the wall, floor, slab, etc. and making good the same using 1:3 cement mortar after the pipeline is laid.

6. All necessary materials, labour and use of tools.

9.4.2.11 **MODE OF MEASUREMENT:** The measurement shall be for unit running metre length of pipe line of specified nom. bore laid or fixed and shall be measured along the center line of the pipe line.

9.4.3 **UNDER GROUND G.I. PIPING WORK:**

9.4.3.01 **GENERAL:** The item includes supplying G.I. pipes and fittings of specified nom. bore and class as mentioned in the schedule including laying, jointing and painting.

9.4.3.02 **MATERIAL:** Please refer clause 9.4.1.02

9.4.3.03 **TRENCHES:** The galvanised iron pipes and fittings are to be laid in trenches. The widths and depths of the trenches for different diameter of the pipes shall be as given below

Diameter of pipe (mm)	Min. Width of trench (mm)	Min. Depth of trench (mm)
15 to 50	300	600
65 to 100	450	750

When excavation is done in rock, it shall be cut deep enough to permit the pipes to be laid on a cushion of sand of min. 7.5 cm.

At joints, the trench width shall be widened where necessary. The work of excavation and refilling shall be done true to line and gradient in

© 2022 MECON Limited All rights reserved

accordance with general specifications for earth work in trenches as per clause 2.0.

9.4.3.04 **LAYING:** Where a pipe is to be laid under ground, the particular length of pipe should be protected by first painting before laying and then wrapping around the pipe a layer of jute or hessian cloth in the form of bandage, so that this cloth in the form of bandage, stick to the composition which has been freshly applied.

Pipes shall be so laid as not to expose to sun or be subjected to any injury or risk to the pipe. As far as possible, pipes shall be laid in straight and parallel lines. They shall be used in standard length pipe pieces being used only where necessary to make up the exact length.

9.4.3.05 **JOINTING:** Please refer clause No. 9.4.1.05

9.4.3.06 **DEWATERING:** The contract rate shall include bailing or pumping out all the water if accumulated during the progress of the work either from rain, seepage, springs or any other cause.

9.4.3.07 **TESTING:** Same as clause 9.4.1.07

9.4.3.08 **PAINTING:** G.I. pipes and fittings shall be painted with two coat of anticorrosive paint before pipe line is laid.

9.4.3.09 **PRECAUTIONS**

a) All water supply pipes shall be so laid and so fixed and maintained as to be and remain completely water tight.

b) During installation open ends of each pipe shall be protected by suitable covers or plugs so that the ends, thread, sockets or spigot are not damaged and no foreign materials can make its way into the pipe line.

c) Due care should be taken to ensure that there shall be no cross connection whatsoever between a pipe or fitting for conveying or containing wholesome water and a pipe or fitting containing impure water or water liable to contamination or of an uncertain quality of water which has been used for any other purposes.

d) Fittings and fixtures liable to be stolen shall be fitted and fixed just before testing and handing over.

9.4.3.10 **THE RATE INCLUDES FOR:**

1. Supplying G.I. pipes and fittings such as sockets, elbows, bends, tees, enlarges, plugs, reducers, checknuts, unions etc. of specified diameter including hemp yarn, linseed oil etc.

© 2022 MECON Limited All rights reserved

2. Laying, jointing and fixing the pipe with fittings including threading, cutting pipes, wastage etc.

3. Covering with hessian cloth, painting and testing the pipe line,

4. Dewatering the trench or pit till completion of work.

5. All necessary labour, material and use of tools.

9.4.3.11 **MODE OF MEASUREMENT:** The measurement shall be for unit running metre length of pipe line of specified nom, bore laid or fixed and shall be measured along the center line of the pipe line.

9.4.4 HIGH DENSITY POLYETHYLENE PIPING WORK FOR WATER SUPPLY:

9.4.4.01 **GENERAL:** The item includes supplying of HDPE pipes with fittings of specified diameter including laying, fixing, cutting, jointing.

9.4.4.02 **MATERIAL:** The pipes and fittings shall conform to series IV of IS 4984. HDPE pipes and fittings shall be free from cracks, flaws and defects and shall be able to withstand a pressure as mentioned in the schedule.

9.4.4.03 **EXAMINING:** Before laying the pipe line, if shall be first examined for damages and cracks, No cracked or damaged pipe and fittings shall be used in the work and they shall be removed from the site by the contractor at his own cost and charge.

9.4.4.04 **LAYING:** The pipes shall be carefully laid straight to the correct alignment in gradients as indicated in the drawing. All the pipe shall be used in standard length as far as possible. Cut length may be used only where it is necessary to make up exact length.

The entire length of pipe shall be evenly supported on bed of the trench throughout. Care shall be taken to prevent any sand, earth or other materials from entering into the pipes during laying. At the end of day's work, the open end shall be suitably plugged.

9.4.4.05 **FIXING:** The pipe line shall be fixed in position as shown in the drawing or as directed by the Engineer-in-charge. The pipe shall be fixed with G.I. clamps not less than 2 mm thick or with suitable diameter HDPE clamps. The clamps shall be fixed into the wall with M.S. nails not less than 40 mm long./ Wooden gutties etc. chromium plated screws with wooden gutties fixing the pipe line on internal wall surface.

9.4.4.06 **MAKING JOINT:** The joining of pipes and fittings generally shall be done by Butt weld with heat mirror jointing. The pipe shall be cut to desired length. Care shall be taken that profile of cut surfaces is not changed and

© 2022 MECON Limited All rights reserved

the fibrous material shall be removed with scraper or knife. The butt weld jointing shall be made with electrical heated plated at the required temperature around 205 ± 5 degree Centigrade. While jointing, care shall be taken that formation of the rim at end of pipe after heating by hot plate should be made uniform and complete on both the ends. Holding and pressing of pipe is done manually or mechanically to give the leak proof joint.

9.4.4.07 **DETACHABLE JOINT:** Detachable joints shall be made where pipes of different materials have to be jointed or as specified in the schedule. The flanges are first pushed over the pipe ends and a rim is made by heating the pipe end in a suitable device to 70-180 Centigrade and welding pre-heated rim of the pipe.

9.4.4.08 **DEWATERING:** In case of underground pipes, the contract rate shall include bailing or pumping out all the water till completion of work if accumulated during the progress of work either from seepage, springs, rain or any other cause.

9.4.4.09 **TESTING:** Solvent welded pipe shall not be pressure tested until at least 24 hours after the last solvent cemented joint has been done. All control valves shall be positioned open for the duration of the test and open end closed with water tight fittings. The testing pressure on completion of the work shall not be less than 1.5 times the working pressure of the pipes.

Pressure shall be applied either by hand pump or power driven pump. Pressure gauges shall be correctly positioned and closely observed to ensure that at no time are the test pressure exceeded. The systems shall be slowly and carefully filled with water to avoid surge pressure or water hammer. Air vents shall be open at all high points so that air may be expelled from the system during filling.

When the system has been fully charged with water and air displaced from the line, air vent shall be closed and the line initially inspected for seepage at joints and firmness of supports under load. After the pressure is reached, without any additional requirement of make-up-water, the test pressure should not fall more than 0.02 MPa (0.2 kg./sq.cm)at the end of one hour test duration.

9.4.4.10 **PRECAUTIONS**

a) All water supply pipes shall be so laid and so fixed and maintained as to be and remain completely water tight.

b) During installation open ends of each pipe shall be protected by suitable covers or plugs so that the ends, thread, sockets or spigot are not damaged and no foreign materials can make its way into the pipe line.

© 2022 MECON Limited All rights reserved

c) Due care should be taken to ensure that there shall be no cross connection whatsoever between a pipe or fitting for conveying or containing wholesome water and a pipe or fitting containing impure water or water liable to contamination or of an uncertain quality of water which has been used for any other purposes.

d) Fittings and fixtures liable to be stolen shall be fitted and fixed just before testing and handing over.

9.4.4.11 THE RATE INCLUDES FOR:

1. Supplying of HDPE pipes and fittings of specified diameter.
2. Laying and cutting the pipe wherever necessary and wastage.
3. Making the solution joint or mirror joint, painting if mentioned in schedule of quantities.
4. Fixing the pipe line with G.I. clamps not less that 20 mm x 1 mm thick and G.I./M.S. nails length not less than 40 mm or HDPE clamps, screws, rawl plug etc.
5. In case of underground pipes, dewatering the pit or trench till completion of work.
6. All necessary labour, materials and use of tools.

9.4.4.12 MODE OF MEASUREMENT: The measurement shall be for unit running meter length of pipe line laid or fixed. The measurement shall be taken along the centre line of pipe. No measurement shall be recorded separately for fitting, making joint, painting if mentioned in schedule of quantities and testing.

9.4.5 UPVC PIPING WORK FOR WATER SUPPLY:

9.4.5.01 GENERAL: The item includes supplying of UPVC pipes with fittings of specified diameter including laying, fixing, cutting, joining, painting etc. for vent, over flow, waste water pipe line etc.

9.4.5.02 MATERIAL: The pipes and fittings shall conform to series IV of IS 4985-2000, UPVC pipes and fittings shall be free from cracks, flaws and defects and shall be able to withstand a pressure as mentioned in the schedule of quantities.

9.4.5.03 EXAMINING: Before laying the pipe line, it shall be first examined for damages and cracks, No cracked or damaged pipe and fittings shall be used in the work and they shall be removed from the site by the contractor at his

© 2022 MECON Limited All rights reserved

own cost and charge.

9.4.5.04 **CLEANING:** All the pipes and fittings shall be thoroughly cleaned with brush and washed if necessary to remove any accumulated stone, soil or dirt inside and out side surfaces.

9.4.5.05 **TRENCHES:** The trench bottom shall be carefully examined for the presence of hard objects such as flints, rock projection or tree roots etc. Pipe shall be embedded in sand or soft soil, free from rock & gravel, back fill 150mm above the pipe shall also be of fine sand or soft soil. Pipe shall not be painted. The width of trench shall not be less than out side diameter of pipe plus 300 mm in case of gravel soils. Pipe shall be laid at-least 900 mm below the ground level (measured from the surface of the ground to the top of pipe).

9.4.5.06 **LAYING:** The pipes shall be carefully laid straight to the correct alignment in gradients as indicated in the drawing. All the pipe shall be used in standard length as far as possible. Cut length may be used only where it is necessary to make up exact length.

The entire length of pipe shall be evenly supported on bed of the trench throughout. Care shall be taken to prevent any sand, earth or other materials from entering into the pipes during laying. At the end of day's work, the open end shall be suitably plugged.

9.4.5.07 **FIXING:** The pipe line shall be fixed in position as shown in the drawing or as directed by the Engineer-in-charge. The pipe shall be fixed with G.I. clamps not less than 2 mm thick or with suitable UPVC clamps, The clamps shall be fixed into the wall with G.I. nails not less than 40 mm long and wooden gutties.

Spacing between clamps for fixing internal piping shall be as given below:

Pipe dia	For Horizontal Runs	For Vertical Runs
20 mm	700 mm	1050 mm
25mm	750mm	1125mm
32mm	825 mm	1240 mm
40 mm	975 mm	1460 mm
50 mm	975 mm	1460 mm

9.4.5.08 **MAKING JOINT:** The jointing of pipes and fittings generally shall be done with approved make cement solvent including making surface rough. The pipe shall be cut to desired length. Care shall be taken that that profile or cut surfaces shall not be changed and the fibrous material shall be removed with scraper or knife.

© 2022 MECON Limited All rights reserved

9.4.5.09 **DETACHABLE JOINT:** Detachable joints shall be made where pipes of different materials have to be jointed or as specified in the schedule. The flanges are first pushed over the pipe ends and jointing shall be made by cement solvent.

9.4.5.10 **PAINTING**: If mentioned in schedule of work, the exposed pipe line shall be painted with two coats of approved oil paint of matching colour over a coat of primer. Underground pipeline shall not be painted.

9.4.5.11 **DEWATERING:** In case of underground pipes, the contract rate shall include bailing or pumping out all the water till completion or work if accumulated during the progress of work either from seepage, springs, rain or any other cause.

9.4.5.12 **PRECAUTIONS**

a) All water supply pipes shall be so laid and so fixed and maintained as to be and remain completely water tight.

b) During installation open ends of each pipe shall be protected by suitable covers or plugs so that the ends, thread, sockets or spigot are not damaged and no foreign materials can make its way into the pipe line.

c) Due care should be taken to ensure that there shall be no cross connection whatsoever between a pipe or fitting for conveying or containing wholesome water and a pipe or fitting containing impure water or water liable to contamination or of an uncertain quality of water which has been used for any other purposes.

d) Fittings and fixtures liable to be stolen shall be fitted and fixed just before testing and handing over.

9.4.5.13 **TESTING:** Please refer clause No. 9.4.4.9

9.4.5.14 **THE RATE INCLUDES FOR:**

1. Supplying of UPVC pipes and fittings of specified diameter.

2. Laying and cutting the pipe wherever necessary and wastage.

3. Fixing the pipe line with G.I. clamps not less than 2 mm thick and G.I./M.S. nails length not less than 40mm or with PVC clamps, screws, wooden gutties etc.

4. Making the solution joint, painting the pipe line, if mentioned in schedule of quantities.

5. In case of underground piping, dewatering till completion of work.

© 2022 MECON Limited All rights reserved

6. All necessary materials, labour and use of tools.

9.4.5.15 **MODE OF MEASUREMENT:** The measurement shall be for unit running meter length of pipe line laid of fixed. The measurement shall be taken along the center line of pipe. No measurement shall be recorded separately for fittings, making joint, painting if mentioned in schedule of work and testing. length of pipe line laid or fixed.

9.4.6 CPVC PIPES AND FITTINGS

9.4.6.1 **GENERAL**: CPVC piping shall be Fire Proof, Corrosion resistance with smooth, friction free interior surfaces and with anti - bacterial growth properties.

9.4.6.2 **JOINING TUBING & FITTINGS**

(a) Cutting

CPVC tubing shall be cut with a wheel-type plastic tubing cutter, a hack saw or other fine toothed hand or power saws. Use of ratchet cutters shall be permitted, provided blades are sharpened regularly. A milter box should be used to ensure a square cut when using a saw.

(b) Deburring/Beveling

Burrs and fillings can prevent proper contact between tube and fitting during assembly, and should be removed from the outside and inside of the tubing. A chamfering tool shall be used for this purpose. A slight bevel on the end of the tubing shall be provided to enable entry of the tubing into the fitting socket and minimize the chances of pushing solvent cement to the bottom of the joint.

(c) Fitting Preparation

The surfaces shall be wiped clean of dirt and moisture from the fitting sockets and tubing end. Check the dry fit of the tubing and fitting. The tubing should make contact with the socket wall 1/3 to 2/3 of the way into the fitting socket.

(d) Solvent Cement Application

Only approved type Solvent Cement shall used for jointing the CPVC pipes, which shall be procured as per the manufacturer recommendations. Apply an even coat of Cement Solvent on the Pipe end after cleaning of whole pipe and also inside the fittings socket. Old or deteriorated or thickened or Lumpy Solvent Cement shall not be used.

© 2022 MECON Limited All rights reserved

(e) Assembly

Immediately insert the pipe into fitting socket, rotate the pipe ¼ to ½ turn while inserting. This motion ensures an even distribution of cement within the joint. Properly align the fitting. Hold the assembly for approximately 10 seconds, allowing the joint to set-up. An even bead of cement should be evident around the socket edge, it may indicate that sufficient cement was applied. In this case, remake the joint to avoid potential leaks. Wipe excess cement from the tubing and fitting surfaces for an attractive, professional appearance.

(f) Rating & Dimensional Details of CPVC Pipes SDR 11

Nominal Pipe Size		Average Outside Diameter		Wall Thickness		Pressure Rating
inch	mm	inch	mm	inch	mm	73.4o F psi
½	12.70	0.625	(15.9)	0.068	(1.73)	400
¾	19.05	0.875	(22.2)	0.080	(2.03)	400
1	25.40	1.125	(28.6)	0.102	(2.59)	400
1 ¼	31.75	1.375	(34.9)	0.125	(3.18)	400
1 ½	38.10	1.625	(41.3)	0.148	(3.76)	400
2	50.80	2.215	(54.0)	0.193	(4.90)	400

9.4.7 GUN METAL/ BRASS FULL WAY VALVE:

9.4.7.01 GENERAL: The item includes provision of full way (gate or globe) valve of specified diameter as mentioned in the schedule including fixing. Full way valve is a valve suitable for controlling or stopping the flow in water supply lines.

9.4.7.02 MATERIAL:

Full way valve shall be of either Brass fitted with a cast iron hand wheel or Gun metal fitted with a CI. hand wheel as the case may be and shall be of Gate valve type opening full way and of the size as specified conforming to IS 778. The weight of the full way gate valve shall be as per the table given below with a tolerance of 5 percent.

Diameter in mm	Flanged arch (Kg)	Screwed arch (Kg)
15	1.021	0.567
20	1.503	0.680
25	2.495	1.077
32	3.232	1.559
40	4.082	2.268
50	6.691	3.232

© 2022 MECON Limited All rights reserved

65	10.149	6.804
80	13.381	8.845

9.4.7.03 **FIXING:** The valves shall be fixed in position in the pipeline as shown in the drawing or as directed with necessary socket or union, nuts etc. The screwed, flanged joint shall be made with few turns of fine hemp yarn dipped in linseed oil taken over the threaded ends to obtain complete water tightness.

9.4.7.04 **TESTING:** The joints shall be tested to a hydraulic pressure of 1 MPa (10 kg/cm^2 along with the testing of pipe line.

9.4.7.05 **THE RATE INCLUDES FOR:**

1 Valve, G.I. fittings, hemp yarn, linseed oil, zinc, fixing and testing.

2. All necessary labour, materials and use of tools.

9.4.7.06 **MODE OF MEASUREMENT:** The measurement shall be for each unit valve of specified diameter fixed,

9.4.8 PRESSURE REDUCING VALVE:

9.4.8.01 **GENERAL:** The item includes provision of pressure reducing valve of specified diameter as mentioned in the schedule including fixing.

9.4.8.02 **MATERIAL**: Pressure reducing valve is a device with suitable means of connection for insertion in a vertical pipe line for controlling the water pressure. Valve shall be of brass and shall be vertical flow type, conforming to IS 9739-1981.

9.4.8.03 **FIXING:** The valve shall be fixed in position on the pipe line as shown in the drawing or as directed. The screwed or flanged joint shall be made to obtain complete water tight joint.

9.4.8.04 **TESTING:** The joints shall be tested to a hydraulic pressure of 1MPa (10 kg/cm^2 along with testing of pipe line for a minimum duration of 2 hrs.

9.4.8.05 **THE RATE INCLUDES FOR:**

1. Supplying Valve including fixing and testing.

2. All necessary labour, materials and use of tools.

9.4.8.06 **MODE OF MEASUREMENT:** The measurement shall be for each unit of valve of specified diameter fixed.

9.4.9 C.I. SLUICE VALVE CHAMBER:

© 2022 MECON Limited All rights reserved

9.4.9.01 **GENERAL:** The item includes construction of brick masonry valve chamber of size as specified in this schedule including providing M.S./G.I. frame and cover over R.C.C pre-cast cover with or without surface box.

9.4.9.02 **MATERIAL:** Brick work, plastering, concreting etc. shall be as per general specification . Precast RCC cover slab, surface box, C.I/M.S frame and cover etc. shall be size and weight as specified in the schedule.

9.4.9.03 **CONSTRUCTION:**

a) Foundation concrete of mix 1:4:8 shall be of 150 mm thick with 150 mm offset alround or as specified in the schedule.

b) Brick masonry in cement mortar 1:4 as specified.

c) Plastering inside and outside surfaces of walls in two courses using cement mortar 1:3 of thickness as specified mixed with water proofing compound of specified Quality including inner surfaces finished smooth with neat cement punning.

9.4.10 **FLANGES & FLANGED JOINT: (Screwed or welded Flanges)**

9.4.10.01 **GENERAL:** The item includes supplying flanges and providing flanged joint for G.I./ M.S./ C.I pipes, fittings and specials including testing.

9.4.10.02 **MATERIAL:** The CI flanges shall be confirming to IS 3516 or IS 1536. The heavy quality G.I./ MS. flanges shall be conforming to IS 6392 having thickness not less than 20 mm for pipes having diameter beyond 80 mm and 12 mm for pipes having diameter below 80 mm including drilling holes in new flanges, jointing with the pipe by means of welding or screwed joint. Rubber insertion shall be of three ply not less than 3 mm thick of approved make or fiber board impregnated with chemically neutral mineral oil having smooth & hard surface weighing not less than 112 gm/mm thickness. Bolts, nuts and washers used shall be of good quality.

9.4.10.03 **MAKING JOINT:** Flanged joints shall be made by jointing the facing of the flange with the packing of rubber insertion and boiling up evenly on all sides. A thin layer of lead wool shall be provided for making the joints water tight where facing of the pipe is not true. The packing shall be of rubber insertion of three ply and of approved make and thickness. The packing should be of full diameter of the flange with proper pipe hole and bolt hole; cut even at both the inner and outer edges.

9.4.10.04 **DEWATERING:** The contract rate shall include bailing or pumping out all the water if accumulated during the progress of the work either from rain, seepage, springs or any other cause till the completion of work,

9.4.10.05 **TESTING:** The joints shall be tested along with pipe line after the pipe line

© 2022 MECON Limited All rights reserved

is laid and jointed. The testing shall be as per the clause of testing of the pipe line

9.4.10.06 THE RATE INCLUDES FOR:

1 Cost of flanges, making bolt holes in flanges, supplying rubber insertion, making flanged joint.

2. Testing and making good the defective joints.

3. Dewatering the trench or pit till completion of work.

4. All labour, material and use of tools.

9.4.10.07 MODE OF MEASUREMENT: The measurement shall be for each unit of flange joint of specified size made with supplying one or two new flanges as specified in the schedule of quantities.

9.4.11 FLEXIBLE PUSH-ON JOINT (TYTON/ RING JOINT)

9.4.11.1 GENERAL: The item includes push-on joint with rubber ring for C.I. pipes, fittings and including testing.

9.4.11.2 MATERIAL: Rubber ring shall be moulded or tubular natural or synthetic rubber gasket conforming IS 12820.

9.4.11.3 JOINTING: The groove and the socket shall be thoroughly cleaned before inserting the rubber gasket while inserting the gasket it shall be made sure that it faces the proper direction and that it is correctly seated in the groove. After cleaning dirt or foreign materials from the plain end, non petroleum lubricant shall be applied in accordance with the pipe manufacturer's recommendations. The plain end of the pipe is pushed into the socket of the pipe and while pushing, the pipe shall be kept straight. If any deflections are to be made in the alignment, it may be made after the joint is assembled. The permissible deflection shall not be exceeded as per IS 3114 for socket and spigot rubber joint is 5 for 80 to 300 mm nom. bore, 43 for 350 to 400 mm nom bore and 33 for 450 to 750 mm nom bore pipe. A timber header shall be used between the pipe and crowbar or jack to avoid damage to the pipe while the plain end of the pipe is pushed into the socket either with a crowbar or jack or lever puller.

9.4.11.4 TESTING: The joints shall be tested along with pipe line after the pipe line is laid and jointed. The testing shall be as per the clause of testing of the pipe line

9.4.11.5 DEWATERING: The contract rate shall include bailing out all the water if accumulated during the progress of the work either from rain, seepage,

© 2022 MECON Limited All rights reserved

springs or any other cause till the completion of work.

9.4.11.6 THE RATE INCLUDES FOR

1. Rubber ring, lubricant etc.
2. Testing and making good the defective joints.
3. Dewatering the trench or pit till completion of work,
4. All labour, material and use of tools.

9.4.11.7 MODE OF MEASUREMENT: The measurement shall be for each unit of rubber ring joint made.

9.4.12 AIR VALVE:

9.4.12.01 GENERAL: The item includes supplying of single, double action or kinetic air Valve of specified diameter as mentioned in the schedule including fixing.

9.4.12.02 MATERIAL: The Air Valve shall be of heavy quality conforming to IS 14845 with IS certification mark and isolation valve. The body, domes, covers, stuffing box, thrust plates, wedges, gland and cap shall be of cast iron not less than of grade 20 and inside working parts should be of any non-ferrous or ferrous materials.

9.4.12.03 FIXING: The Air Valve shall be fixed in position as indicated in the drawing or as directed. They shall be fitted by means of flange joints or screwed joint to the pipe line.

9.4.12.04 TESTING: The Air Valve and the joints shall be tested hydraulically to a minimum pressure as per testing clause of piping work. The testing shall be done along with the testing of pipe line.

9.4.12.05 THE RATE INCLUDES FOR:

1. Supplying and fixing Air Valve of specified diameter and type.
2. Supplying G.I. pipe and fittings if required.
3. All necessary labour, material and use of tools.

9.4.12.06 MODE OF MEASUREMENT: The measurement shall be for each unit of Air Valve fixed CI. and G.I. specials, making lead or flange joint etc. shall be measured under the relevant items.

9.4.13 BUTTER FLY VALVE:

© 2022 MECON Limited All rights reserved

9.4.13.01 **GENERAL:** The item includes supplying and fixing of butterfly valve of specified diameter as mentioned in the schedule.

9.4.13.02 **MATERIAL:** The butterfly valve shall be flanged type or as specified conforming to IS 13095 & BS - 5155. The valve shall be bubble tight, resilient sealed suitable for flow in either direction with accompanying flanges and steel handle.

9.4.13.03 **FIXING:** The butterfly valve shall be fixed to the pipe line in position as indicated in the drawing and as directed by the Engineer-In-Charge.

9.4.13.04 **TESTING:** The valve and the joints shall be tested to a minimum hydraulically pressure of 10kg/sqcm for a duration of two hours or as per testing clause of piping work, The testing shall be done along with the testing of pipe line. The leaky joints shall be rectified to the satisfaction of the Engineer-in-Charge.

9.4.13.05 **THE RATE INCLUDES FOR:**

1. Supplying and fixing Butterfly Valve of specified diameter.
2. Supplying G.I. pipe and fittings if required.
3. All necessary labour, material and use of tools.

9.4.13.06 **MODE OF MEASUREMENT:** The measurement shall be for each unit of butterfly Valve fixed. CI. and G.I. specials, making lead or flange joint etc. shall be measured under the relevant items.

9.5 DRAINAGE SYSTEM

9.5.1 CAST IRON SOIL QUALITY PIPING WORK:

9.5.1.01 **GENERAL:** The item includes supplying of soil quality CAST IRON pipe of specified diameter with fittings and fixtures including laying, fixing, cutting, jointing and painting the pipe line.

9.5.1.02 **MATERIAL** Cast Iron soil quality pipes and fittings shall have ISI certification mark. Sand -Cast, Cast Iron Soil quality or rain water pipes and fittings shall confirm to IS 1729 and centrifugally cast (Spun Cast) cast iron soil quality pipe shall confirm to IS 3989. All the pipes and fittings shall be cylindrical reasonably true with inner and outer surfaces and nearly concentric as practicable. The outer surface of the pipe and fitting shall be finished well, sound, free from pin hole, cracks and other imperfections. The pipes & fittings shall be treated with solution of Dr. Angus Smith's solution.

The dimensions, weight of Sand-Cast Iron/ Ductile Iron pipes and fittings shall be as per following table of IS 1729 - 2002 or its latest revision.

© 2022 MECON Limited All rights reserved

Tolerance: Mass (-) 5%, thickness (-) —2mm, pipe length (+/-) 20 mm, fitting length (+/-) 10mm

Sr. No.	Nominal Dia	Thickness of wall	Nominal weight for pipes of overall length (L) (Exclusive of ears								
			2.0 m	1.80M	1.50m	1.20	0.90m	0.75m	0.6m	0.45m	0.3m
			Kg.	Kg.	Kg	Kg.	Kg.	Kg.	Kg.	Kg.	Kg.
1.	50mm	5mm	12.65	11.41	9.56	7.9	6.0	5.1	4.2	3.3	2.4
2.	75mm	5mm	18.37	16.52	13.83	11.5	8.8	7.5	6.1	4.8	3.4
3.	100 mm	5 mm	24.15	21.67	18.14	15.1	11.6	9.8	8.0	6.3	4.5
4.	150 mm	5 mm	35.66	31.92	26.70	22.6	17.3	14.7	12.1	9.5	6.9

The Dimensions, weight of Spun cast pipes and fittings shall be as per following table of IS 3989 - 1984 or its latest revision,

Tolerances: ((a) Thickness (-)15% (b) Weight (-) 10% (C) Length (+ / -) 20 mm) shall as per IS 3989

SN	Nominal Dia.	Thickness	Approximate weight for pipes of overall length (L)				
			3.0 m	2.5 m	2.0 m	1.8 m	1.5 m
			Kg	Kg	Kg	Kg	Kg
1.	50 mm	3.5 mm	13.4	11.3	9.2	8.4	7.1
2.	75 mm	3.5 mm	20.0	16.8	13.8	12.5	10.6
3.	100 mm	4 mm	30.0	25.5	21.0	18.8	16.0
4.	150 mm	5 mm	56.0	47.0	38.5	34.9	29.5

9.5.1.03 **EXAMINING:** Before laying the pipe line, it shall be first examined for damages and cracks. No cracked or damaged pipe and fittings shall be used in the work and they shall remove from the site by the contractor at his own cost & charge.

9.5.1.04 **CLEANING:** All pipes and fittings shall thoroughly cleaned with brush and washed if necessary to remove any accumulated stone, soil or dirt inside and outside of piping material.

9.5.1.05 **FIXING:** The pipe shall be fixed as shown in the drawing. If the holes are not left in parapet, wall, beam, slab, floor, etc., they shall be cut and cavity surrounding the pipe made good properly after fixing the pipe. The pipe shall be fixed with nails and MS. clamps having thickness not less than 3 mm , 20 mm wide or as specified in the schedule with socket facing up.

Spacing between clamps for fixing internal piping shall be as per IS 2065 — 1983 as given below:

© 2022 MECON Limited All rights reserved

Nom. dia of pipe	Horizontal runs	Vertical runs
50 mm	2 M	2 M
80 & 100 mm	2.5 M	2.5 M

The pipe and fitting shall be kept 50 mm away from the wall face to facilitate cleaning and painting etc. For rain water pipe the inlet end shall be carefully fixed to admit water from roof and shoe shall be fixed at outlet. Cowl shall be fixed at top end of the vent pipe.

9.5.1.06 **LAYING:** The pipes shall be carefully laid straight to correct alignment in gradients as indicated in the drawing or as directed by the Engineer-in-charge. The socket end of the pipe shall be uphill. All the pipes shall be used in standard length as far as possible. Cut length may be used only where it is necessary to make up exact length. While joining, the spigot shall be neatly placed into the socket for full length and properly supported, The entire length of pipe shall be evenly supported on the trench bed through out. Care shall be taken to prevent any sand, earth or other materials from entering into the pipes during laying. At the end of days work the open end shall suitably plugged.

No pipe shall be laid until the trench has been excavated to its required depth for a distance of about 5 M in front of the pipe to be laid. No pipe shall be covered until it has been passed by the Engineer-in-charge.

9.5.1.07 **MAKING LEAD JOINT:** The spigot shall be carefully centered in the socket by one or more laps of spun hemp yarn twisted into ropes of uniform thickness thoroughly soaked in hot coal-tar or bitumen and cooled before use. The joints shall be made with molten lead and hemp yarn. The lead shall be melted rendering it thoroughly fluid and each joint shall be filled in one pouring. The lead may project 3 mm beyond the face of the socket against the outside of spigot, but must be flushed with the outside edge of the socket.

After the lead has been run into the joint, the lead shall be thoroughly caulked by a suitable caulking tool and 2 Kg hammer and the joint left neat and smooth. The consumption of lead will be worked out on the basis of actual observation at sit. The following table shows consumption of lead and yarn per joint.

DIAMETER OF PIPE (MM)	YARN (in kg.)	LEAD (in kg.)
50	0.06	0.77
80	0.09	0.88
100	0.11	0.98
150	0.18	1.20

9.5.1.08 **TESTING:** The pipe line which is laid on the ground or below the ground level, the joints shall be tested with two meter head of water from a higher

© 2022 MECON Limited All rights reserved

section of pipe line.

The pipe line fixed vertically on the wall shall be tested by the smoke test. The Greasy cotton waste shall be burnt in a smoke machine consisting of bellows and a burner. If any lead joint is found to be sweating or leaking, the contractor shall rectify the same till water tightness is attained to the full satisfaction of the Engineer-in-charge.

9.5.1.09 **DEWATERING:** In case of underground piping, the contract rate shall include bailing or pumping out all the water till completion of work if accumulated during the progress of work either from seepage, springs, rain or any other cause,

9.5.1.10 **THE RATE INCLUDES FOR:**

1. Supplying of C.I. soil quality Pipes and fittings, cowl for vent and shoe for rain water pipe of specified diameter with M.S. clamps and nails.
2. Laying, fixing, cutting and joining the pipe wherever necessary and wastage.
3. Making the lead joint including cost of fuel, wood, jointing with lead, spun yarn etc.
4. Fixing the pipe line with MS. clamps not less than 3 mm thick, 20 mm wide and M.S. nails length not less than 60mm and painting the clamps and nails.
5. Supplying and fixing rubber gasket to every cleaning access of cast iron pieces.
6. Painting the pipe line with two coats of black anti corrosive bitumastic paint or painting with synthetic enamel paint over appropriate primer, in case the pipe line exposed in elevation.
7. Testing the pipe line with smoke test or with two meter head of water.
8. Dewatering, if necessary till completion of work.
9. All necessary materials, labour and use of tools.

9.5.1.11 **MODE OF MEASUREMENT:** The measurement shall be for unit running meter length of pipe line laid or fixed. The measurement shall be taken along the center line of pipe. No measurement shall be recorded separately for fittings. Making lead joint, painting and testing.

9.5.2 **UPVC- SWR PIPING WORK:**

9.5.2.01 **GENERAL:** The item includes supplying of UPVC soil, waste and rain

© 2022 MECON Limited All rights reserved

water (SWR) and ventilation pipes with fittings of specified diameter including laying, fixing, cutting, joining, painting if required etc.

9.5.2.02 **MATERIAL:** The pipes shall conforming to IS 13592, UPVC - SWR and all fittings conforming to IS 13593 shall be free from cracks, flaws and defects and shall be able to withstand a pressure as mentioned in the schedule of work. Rubber sealing rings conforming to IS 5382 with lubricant for sliding socket joints as mentioned in the schedule of work.

9.5.2.03 **EXAMINING:** Before laying the pipe line, it shall be first examined for damages and cracks, No cracked or damaged pipe and fittings shall be used in the work and they shall be removed from the site by the contractor at his own cost and charge.

9.5.2.04 **CLEANING:** All the pipes and fittings shall be thoroughly cleaned with brush and washed, if necessary to remove any accumulated stone, soil or dirt inside and out side surfaces.

9.5.2.05 **LAYING:** The pipes shall be carefully laid straight to the correct alignment in gradients as indicated in the drawing. All the pipe shall be used in standard length as far as possible. Cut length may be used only where it is necessary to make up exact length.

The entire length of pipe shall be evenly supported on bed of the trench through out. Care shall be taken to prevent any sand, earth or other materials from entering into the pipes during laying. At the end of days work the open end shall be suitably plugged.

9.5.2.06 **FIXING:** The pipe line shall be fixed in position as shown in the drawing or as directed by the Engineer-in-charge. The pipe shall be fixed withG.I. clamps not less than 2.0 mm thick of with suitable UPVC clamps/clips, The clamps/clips shall be fixed into the wall with C.I. nails not less than 40 mm long and wooden gutties keeping the pipe about 15 mm clear of the wall.

9.5.2.07 **MAKING JOINT:** The jointing of pipes and fittings generally shall be done with approved make cement solvent including making surface rough or rubber sealing rings with lubricant for sliding socket joints . The pipe shall be cut to desired length. Care shall be taken that that profile or cut surfaces shall not be changed and the fibrous material shall be removed with scraper or knife.

9.5.2.08 **DETACHABLE JOINT:** Detachable joints shall be made where pipes of different materials have to be jointed or as specified in the schedule. The flanges are first pushed over the pipe ends and jointing shall be made by cement solvent.

9.5.2.09 **PAINTING :** In case of underground piping, the pipe line shall be painted with two coats of approved oil paint of matching colour over a coat

© 2022 MECON Limited All rights reserved

of primer.

9.5.2.10 **DEWATERING:** In case of underground pipes ,the contract rate shall include bailing or pumping out all the water till completion or work if accumulated during the progress of work either from seepage, springs, rain or any other cause.

9.5.2.11 **TESTING:** Please see clause no.9.5.3.10

9.5.2.12 **THE RATE INCLUDES FOR:**

1. Supplying of UPVC-SWR pipes and fittings of specified diameter.
2. Laying and cutting the pipe wherever necessary and wastage,
3. Fixing the pipe line with G.I. clamps not less than 2mm thick and G.I./MS. nails length not less than 40mm or with UPVC clamps, screws, wooden gutties etc.
4. Making the solution joint and painting if mentioned in schedule of work the pipe line.
5. In case of underground pipes, dewatering if necessary till completion of work.
6. All necessary materials, labour and use of tools.

9.5.2.13 **MODE OF MEASUREMENT:** The measurement shall be for unit running meter length of pipe line laid of fixed. The measurement shall be taken along the center line of pipe. No measurement shall be recorded separately for fittings, making joint, painting if mentioned in schedule of work and testing.

9.5.3 **HIGH DENSITY POLYETHYLENE PIPING WORK FOR DRAINAGE:**

9.5.3.01 **GENERAL**: The item includes supplying of HDPE pipes with fittings of specified diameter including laying, fixing, cutting, jointing.

9.5.3.02 **MATERIAL:** The pipes and fittings shall conform to IS 14333. HDPE pipes and fittings shall be free from cracks, flaws and defects and shall be able to withstand a pressure as mentioned in the schedule.

9.5.3.03 **EXAMINING:** Before laying the pipe line, if shall be first examined for damages and cracks, No cracked or damaged pipe and fittings shall be used in the work and they shall be removed from the site by the contractor at his own cost and charge.

9.5.3.04 **LAYING:** Please refer clause 9.4.4.03

© 2022 MECON Limited All rights reserved

9.5.3.05 **FIXING:** Please refer clause 9.4.4.05

9.5.3.06 **MAKING JOINT:** Please refer clause 9.4.4.06

9.5.3.07 **DETACHABLE JOINT:** Please refer clause 9.4.4.07

9.5.3.08 **ANTISYPHONAGE:** The HDPE pipes shall be used for anti-syphonage including provision, cutting, wastage, bending, dressing, jointing with cement solution, necessary plugs, brass fittings such a brass thimbles, brass union, brass cleaning caps and other brass fittings as required.

9.5.3.09 **DEWATERING:** In case of under ground piping works, the contract rate shall include bailing or pumping out all the water till completion of work if accumulated during the progress of work either from seepage, springs, rain or any other cause

9.5.3.10 **TESTING:** The joints shall be tested by either smoke test for vertical stacks or 2.5 m head of water at the highest point of the section under test for horizontal drainage pipes. Smoke shall be pumped into the pipes at the lowest end from a smoke machine which consists of a below and burner .The material usually burnt is greasy cotton waste which gives out a clear pungent smoke which is easily detectable by sight as well as by smell, if there is leak at any point of the drain. The water head test shall be carried out by suitably plugging the lower end of the drain and the ends of the connection if any and filling the system with water. A knuckle bend shall be temporarily jointed to it so as to provide required test head , or the top may be plugged with a connection to a hose ending in a funnel which could be raised or lowered till the required head is obtained and fixed suitable for observation. The leaky joints shall be remade and section re-tested at no extra cost.

9.5.3.11 **THE RATE INCLUDES FOR:**

1. Supplying of HDPE pipes and fittings of specified diameter.
2. Laying and cutting the pipe wherever necessary and wastage.
3. Making the solution joint or mirror joint, painting if mentioned in schedule of work
4. Fixing the pipe line withG.I. clamps not less that 20 mm x 1 mm thick and C.I./M.S. nails length not less than 40mm or HDPE clamps, screws, rawl plug etc.
5. In case of underground pipes, dewatering the pit or trench till completion of work.
6. All necessary labour, materials and use of tools.

© 2022 MECON Limited All rights reserved

9.5.3.12 **MODE OF MEASUREMENT:** The measurement shall be for unit running meter length of pipe line laid or fixed. The measurement shall be taken along the centre line of pipe. No measurement shall be recorded separately for fitting, making joint, painting if mentioned in schedule of work and testing.

9.5.4 UPVC PIPING WORK:

9.5.4.01 **GENERAL:** The item includes supplying of UPVC pipes with fittings of specified diameter including laying, fixing, cutting, joining, painting etc. for vent, over flow, waste water pipe line etc.

9.5.4.02 **MATERIAL:** The pipes and fittings shall conform to series IV of IS 4985, UPVC pipes and fittings shall be free from cracks, flaws and defects and shall be able to withstand a pressure as mentioned in the schedule.

9.5.4.03 **EXAMINING:** Before laying the pipe line, it shall be first examined for damages and cracks, No cracked or damaged pipe and fittings shall be used in the work and they shall be removed from the site by the contractor at his own cost and charge.

9.5.4.04 **CLEANING**: All the pipes and fittings shall be thoroughly cleaned with brush and washed if necessary to remove any accumulated stone, soil or dirt inside and out side surfaces.

9.5.4.05 **LAYING**: Please refer clause 9.4.5.05

9.5.4.06 **FIXING:** Please refer clause 9.4.5.06

9.5.4.07 **MAKING JOINT:** Please refer clause 9.4.5.07

9.5.4.08 **DETACHABLE JOINT:** Detachable joints shall be made where pipes of different materials have to be jointed or as specified in the schedule. The flanges are first pushed over the pipe ends and jointing shall be made by cement solvent.

9.5.4.09 **PAINTING:** If mentioned in schedule of work, the pipe line shall be painted with two coats of approved oil paint of matching colour over a coat of primer.

9.5.4.10 **DEWATERING:** In case of underground pipes, the contract rate shall include bailing or pumping out all the water till completion or work if accumulated during the progress of work either from seepage, springs, rain or any other cause.

9.5.4.11 **TESTING:** The joints shall be tested hydraulically to a pressure as specified in the schedule. The leaky joints shall be remade and section re-tested at no extra cost. The period of test shall be for maximum 2 (two)

© 2022 MECON Limited All rights reserved

hours.

9.5.4.12 THE RATE INCLUDES FOR:

1. Supplying of PVC pipes and fittings of specified diameter.
2. Laying and cutting the pipe wherever necessary and wastage.
3. Fixing the pipe line withG.I. clamps not less than 2mm thick and Cl/MS. nails length not less than 40mm or with PVC clamps, screws, wooden gutties etc.
4. Making the solution joint and painting the pipe line, if mentioned in schedule of work.
5. In case of underground piping, dewatering, if necessary till completion of work.
6. All necessary materials, labour and use of tools.

9.5.4.13 MODE OF MEASUREMENT: The measurement shall be for unit running meter length of pipe line laid of fixed. The measurement shall be taken along the center line of pipe. No measurement shall be recorded separately for fittings, making joint, painting and testing.

9.5.5 GULLY TRAP:

9.5.5.01 GENERAL: The item includes provision of SW. Gully trap with C.I. frame including construction of Gully Trap Chamber.

9.5.5.02 MATERIAL: The Gully Trap shall be of salt glazed stoneware with 150 mm nominal square inlet or as specified in the schedule with 100mm diameter outlet. Brick work, plastering, concreting shall be as per general specifications under section-II.

9.5.5.03 CONSTRUCTION:

1. Internal dimension of the Gully trap chamber shall be as specified in the schedule.
2. Foundation of 1:4:8 concrete shall be 150 mm thick, and shall have 100mm offset.
3. Brick masonry shall be of 230mm thick in cement mortar 1:4 and masonry shall be plastered with 15mm thick plaster in 1:3 cement mortars inside and outside surface with smooth finish.

9.5.5.04 C.I. FRAME AND COVER: C.I. frame and cover shall be fixed with the cement concrete 1:2:4 at the top of Gully trap chamber, the weight of frame

© 2022 MECON Limited All rights reserved

and cover shall not be less than 7.5 kg. and they shall be painted with two coasts of black bitumastic paint.

9.5.5.05 **DEWATERING:** The contract rate shall include bailing or pumping out all the water till completion or work if accumulated during the progress of work either from seepage, springs, rain or any other cause.

9.5.5.06 **THE RATE INCLUDES FOR:**

1. Supplying of stoneware gully trap with C.I. frame and cover.
2. Concreting, brick work, plastering, fixing frame and cover.
3. Dewatering if necessary till completion of work.
4. All necessary materials, labour and use of tools.

9.5.5.07 **MODE OF MEASUREMENT:** The measurement shall be for unit of Gully Trap chamber of specified internal size and depth constructed including stoneware Gully Trap and CI. frame and cover fixed.

9.5.6 **C.I. NAHANI FLOOR TRAP:**

9.5.6.01 **GENERAL:** The item includes supplying of cast iron nahani / floor trap with CP brass/stainless steel grating of specified diameter with fittings and fixtures including fixing and jointing with the pipe line,

9.5.6.02 **MATERIAL:** 65 mm nominal outlet dia C I Nahani trap weighing not less than 4.5 kg with an effective water seal of 20 mm or 75mm nom. outlet dia. floor trap (100mm inlet dia.)/ nahani trap (165mm inlet dia.) conforming to IS 3989 or IS1729 shall be provided as specified in the schedule of quantities. Top grating shall be of CP brass or stainless steel of heavy quality of size and shape to suit the trap.

9.5.6.03 **FIXING:** C.I. nahani/ floor trap with the bend and pipe piece shall be fixed in position over the bed of 1:2:4 cement concrete. The jointing trap and pipe shall be caulked with 1:1 cement mortar. The grating shall be fixed over the nahani / floor trap flush with the floor level and the gap finished with matching cement.

9.5.6.04 **THE RATE INCLUDES FOR:**

1. C.I . nahani/ floor trap with CP brass or stainless steel grating as specified in the item.
2. Fixing the trap and getting with cement mortar or concrete.
3. All necessary materials, labour and use of tools.

© 2022 MECON Limited All rights reserved

9.5.6.05 **MODE OF MEASUREMENT:** The measurement shall be for unit of nahani trap fixed.

9.5.7 **RAIN WATER GRATING:**

9.5.7.01 **GENERAL:** The item includes supplying of cast iron grating of specified diameter including fixing and painting.

9.5.7.02 **MATERIAL:** The rain water grating shall be Cast Iron with closed grained without any casting defects. The thickness should be uniform throughout, one shaped C.I. grating.

9.5.7.03 **FIXING:** C.I. rain water grating shall be fixed in position with 1:1 cement mortar.

9.5.7.04 **THE RATE INCLUDES FOR:**

1. The cast iron rain water grating cement, sand etc.
2. Fixing the grating.
3. All necessary materials, labour and use of tools.

9.5.7.05 **MODE OF MEASUREMENT:** The measurement shall be for each unit of grating fixed.

9.5.8 **LEAD SHEET FLASHING:**

9.5.8.01 **GENERAL:** The item includes supplying lead sheet flashing of specified size including laying, fixing, cutting, jointing and laying.

9.5.8.02 **MATERIAL:** Lead sheet flashing shall not be less than 3 mm thick & weight should not be less than 38 Kg. per sqm.

9.5.8.03 **FIXING:** The lead sheet shall be fixed all around the rain water pipe. The sheet shall project one diameter of socket all-round beyond the outer face of the socket & shall project inside the socket at least half the diameter of the rain water pipe socket. It shall be fixed by bending & breaking the sheet to shape, placing, tucking below waterproofing courses etc.

9.5.8.04 **THE RATE INCLUDES FOR:**

1. The lead sheet flashing, cement concrete and cement mortal etc.
2. Fixing the lead sheet in position.
3. All necessary materials, labour and use of tools.

9.5.8.05 **MODE OF MEASUREMENT:** The measurement shall be for each unit

© 2022 MECON Limited All rights reserved

of lead sheet flashing fixed.

9.5.9 RAIN WATER G.I. SPOUT:

9.5.9.01 GENERAL: The item include supplying of G.I. rain water spouts of specified diameter with or without fitting at outlet including fixing. Cutting and painting.

9.5.9.02 MATERIAL: The rain water spout shall be of heavy quality G.I. pipe of approximate 400 mm length or as specified in the schedule of work. The 'T' of same diameter shall be fixed at the outlet of spout. G.I. Pipe and fitting shall be as per specifications.

9.5.9.03 FIXING: G.I rain water spout shall be fixed in the position as shown in the drawing including breaking, cutting RCC pardi, brick wall, RCC floor etc. It shall be fixed with 1:1 cement mortar and 1:2:4 cement concrete.

9.5.9.04 PAINTING: The exposed part of spout shall be painted with two coats of approved flat oil paint over a coat of primer.

9.5.9.05 THE RATE INCLUDES FOR:

1. The G.I. rain water spout, cement concrete and cement mortar.
2. Fixing and painting the spout.
3. All necessary materials, labour and use of tools.

9.5.9.06 MODE OF MEASUREMENT: The measurement shall be for each unit of C.I. spout fixed.

9.5.9.07 MODE OF PAYMENT: The contract rate shall be for each unit of G.I. spout fixed.

9.5.10 CAST IRON HUBLESS PIPES & FITTINGS

9.5.10.1 GENERAL All pipes shall be straight and smooth and inside free from irregular bore, blowholes, cracks and other manufacturing defects. Pipes shall be centrifugally cast (spun) iron pipes conforming to I.S:15905 as specified in Drawings.

9.5.10.2 Fittings

(a) Fittings used for C.I. drainage pipe shall conform to I.S. 1538-1976. Wherever possible junction from branch pipes shall be made by a 'Y-tee.'

(b) Fittings shall conform to the same Indian Standard. The Contractor shall use pipes and fittings of matching specifications.

© 2022 MECON Limited All rights reserved

(c) Fittings shall be of the required degree of curvature with or without access doors.

(d) Access door shall be made up with 3mm thick insertion rubber washer and white Lead. The bolts shall be lubricated with grease or white Lead for easy removal later. The fixing shall be air and watertight.

9.5.10.3 FIXING

(a) All vertical pipes shall be fixed by M.S. clamps truly vertical. Branch pipes shall be connected to the stack at the same angle as that of the fittings. No collars shall be used on vertical stacks. Each stack shall be terminated at top with a Cowl (terminal guard).

(b) Horizontal pipes running along ceiling shall be fixed on structural adjustable clamps of special design shown on the drawings or as directed. Horizontal pipes shall be laid to uniform slope and the clamps adjusted to the proper levels so that the pipes fully rest on them.

(c) Contractor shall provide all sleeves, openings, hangers, inserts during the construction. He shall provide all necessary information to the building contractor for making such provisions in the structure as necessary. All damages shall be made good to restore the surface.

9.5.10.4 JOINTING

C.I pipes wherever used shall be jointed with SS 304 grade coupling with EPDM rubber gasket

9.6.0 WATER TANK

9.6.1 OVER FLOW COUPLING:

9.6.1.01 GENERAL: The item includes supplying of C.P. Brass over flow coupling with mosquito proof jalli of size as specified in the schedule including fixing and painting.

9.6.1.02 MATERIAL: The overflow coupling shall be of heavy quality. Over flow coupling and Mosquito proof Jalli shall be of C.P. brass.

9.6.1.03 FIXING: The over flow coupling & jalli shall be fixed in position as shown in the drawing with leak proof joints.

9.6.1.04 THE RATE INCLUDES FOR:

1. Supplying & fixing Overflow coupling with mosquito proof jalli.

© 2022 MECON Limited All rights reserved

2. All necessary materials, labour, painting and use of tools.

9.6.1.05 **MODE OF MEASUREMENT**: The measurement shall be for each Over flow coupling fixed with mosquito proof jalli.

9.6.2 BALL VALVE:

9.6.2.01 **GENERAL:** The item includes providing horizontal type ball valve with PVC or copper float of size as mentioned in the schedule including fixing.

9.6.2.02 **MATERIAL:** Horizontal plunger type ball valve with PVC or copper float shall be conforming to IS 1703. The lever shall be of brass and may be made in one piece and the diameter of the lever rod shall not be less than the diameter of the thread for boss of ball. Float shall be watertight and non-absorbent and shall not contaminate water. Adhesives for joining the part shall not be used. The minimum thickness for copper sheet of copper float shall be 0.45 mm up to 115 mm diameter and 0.55 mm for ball over 115 mm diameter. Valve shall be tested in closed position to the hydraulic pressure of 2 MPa for a minimum period of 2 minutes without leakage and sweating.

9.6.2.03 **MINIMUM MASS:** The minimum mass of finished ball valve and float of different size and class shall be as per Table No. 8 of IS 1703.

9.6.2.04 **FIXING:** Valve shall be fixed in position as indicated in the drawing with necessary socket, union nuts etc. as per site requirements. A few turns of fine hemp yarn dipped in linseed oil shall be taken over the threaded ends to obtain complete water tight joint. Leaking joint if any shall be rectified to make it leak proof.

9.6.2.05 **TESTING:** Testing shall be done along with the testing of pipe line, Separate testing if required shall be done as per ISI norms.

9.6.2.06 **THE RATE INCLUDES FOR:**

1. Supply of specified diameter ball valve with copper or PVC float & brass lever arm, hemp yarn, linseed oil, zinc etc.

2. All necessary materials, labour and use of tools.

9.6.2.07 **MODE OF MEASUREMENT**: The measurement shall be for each ball valve fixed.

9.6.3 RUNGS

9.6.3.01 **GENERAL:** The item includes supplying of copolymer polypropylene, steel reinforced plastic foot rests/ Rungs of size as specified in the schedule including fixing and painting

© 2022 MECON Limited All rights reserved

9.6.3.02 **MATERIAL:** The Steps shall be of 20 mm size, round or square of copolymer poly propylene, steel reinforced plastic foot rests conforming to ASTMD-4101 or as specified in the schedule of work,

9.6.3.03 **FIXING:** The Rungs shall be fixed in position as shown in the drawing or as directed by the Engineer-in-charge. It shall be fixed with cement concrete 1:2:4 in position in stone / brick masonry wall or direct cast to concrete wall. The first step shall be fixed 450 mm below from the top surface of structure and other rungs shall be fixed 300 mm center to center (staggered) as shown in the drawing.

9.6.3.04 **THE RATE INCLUDES FOR:**

1. Copolymer steel reinforced rungs, cement concrete etc.
2. All necessary materials, labour and use of tools.

9.6.3.05 **MODE OF MEASUREMENT:** The measurement shall be on the basis of unit rung fixed.

9.6.4 **POLYETHYLENE WATER TANK:**

9.6.4.01 **GENERAL:** The item includes providing polyethylene plastic water tank with cover of capacity as mentioned in the schedule including fixing and making connections such as inlet, outlet, scour, overflow etc.

9.6.4.02 **MATERIAL:** The water tank shall be made out of best moulded Polyethylene plastic. It shall be vertical or horizontal type as specified, watertight and non-absorbent and shall not contaminate water. Adhesives shall not be used in joints. The cover shall be of polyethylene / MS. / C.I. as approved.

9.6.4.03 **FIXING:** The plastic water tank with cover shall be installed and fixed as per the manufacturer's specification. The connections such as inlet, outlets, over flow, scour etc. of specified diameter shall be made as mentioned in the schedule including the cost of fittings, fixtures and pipe of approximate 400 mm long.

9.6.4.04 **THE RATE INCLUDES FOR:**

1. Supply of polyethylene plastic tank, cover, C.I. pipe, fittings etc.
2. Installation of tank and making connections.
3. All necessary materials, labour and use of tools.

9.6.4.05 **MODE OF MEASUREMENT:** The measurement shall be for each polyethylene water tank of specified capacity installed or per litre capacity of water tank.

© 2022 MECON Limited All rights reserved

10.0 MISSCELLANEOUS ITEMS

10.1 STONE CLADDING

The stone shall be cut by gang saw into slabs of required thickness, shape and size along the places parallel to the natural bed so as to free from any waviness and to give truly vertical horizontal surface as required. Care shall have to be taken that corners of the stone are not damaged. The exposed face and sides of stones forming joints shall be such that the straight edge laid along the face of the stone is in contact with every point on it. All the visible angle and edges shall be square and free from chipping. Stone shall be covered with gunny bags before tying chain or rope is passed over and it shall be handled carefully. No pieces which has been damaged shall be used that work. Shop drawings for stone cladding to be submitted by contractor.

10.1.1 Storage and Stacking of Stone

Stone shall be stacked on edge on timber or like runners. Packing pieces inserted between the slabs may be rope or timber. Slabs shall be well covered with plastic sheeting to protect them from any possible staining.

10.1.2 WET STONE CLADDING

Material

Stone thickness shall be as specified in contract specifications or in the drawings. Stone material will be hard, sound durable and tough free from cracks, decay and weathering and defects like cavities cracks, flaws, holes, veins, patches of soft or loose materials etc. Approval of stone sample to be taken before starting the cladding work and to be stored for reference. If thickness of stone for cladding is not specified in contract specifications or drawings then following thickness may be applied:

Marble- 18.0 mm, Granite stone/ Marble Stone Tile - 8.0 mm, Kota Stone- 20.0 mm, Sand Stone- Minimum 30.0 mm to 70.0 mm

Pointing with White Cement and Marble Stone dust mixture.

Fixing with Gunmetal cramps and Expansion hold fasteners.

Cladding shall be done over minimum 12.0 mm thick backing filled cement mortar.

10.1.3 DRY STONE CLADDING

Material

Stone thickness shall be as specified in contract specifications or in the

© 2022 MECON Limited All rights reserved

drawings. Stone material will be hard, sound durable and tough free from cracks, decay and weathering and defects like cavities cracks, flaws, holes, veins, patches of soft or loose materials etc. Approval of stone sample to be taken before starting the cladding work and to be stored for reference. If thickness of stone for cladding is not specified in contract specifications or drawings then following thickness may be applied:

Marble- 18.0 mm, Granite stone/ Marble Stone Tile - 8.0 mm, Kota Stone- 20.0 mm, Sand Stone- 30.0 mm

Structural steel framing system with M.S. square/ rectangular tube as per design, fixed to the wall with welded M.S. Brackets/ Lugs of angle Iron/ Flats etc embedded in concrete block, expansion hold fasteners

Adjustable S.S. cramps/ pins, S.S. nuts- bolts & Washers

Steel work will be provided with a Zinc primer coat and painted with two or more coats of Epoxy paint

10.2 ACP CLADDING

Designing & testing of ACP cladding including Structural analysis and preparation of shop drawings for pressure equalisation or rain screen principle as required, proper drainage of water to make it watertight including checking of all the structural and functional design having all the performance characteristics

ACP cladding in pan shape in metallic colour of approved shades made out of 4mm thick aluminium composite panel material consisting of 3mm thick FR grade mineral core sandwiched between two Aluminium sheets (each 0.5mm thick). The ACP cladding sheet shall be coli coated, with Kynar 500 based PVDF / Lumiflon based fluoropolymer resin coating on face # 1 and polymer (Service) coating on face # 2

The fastening brackets of Aluminium alloy 6005 T5/ MS with Hot Dip Galvanised with serrations and serrated washers to arrest the wind load movement, fasteners, 88 316 Pins and anchor bolts of approved make in 88 316, Nylon separators

Testing in an approved laboratory, field tests on the assembled working curtain wall with ACP cladding, cleaning and protection of the curtain wall with ACP cladding till the handing over of the building for occupation.

Base frame work for ACP cladding with Aluminium frame to withstand a wind pressure of minimum 190 Kg/ Sqm if not specified in contract specifications/ drawings.

© 2022 MECON Limited All rights reserved

However, for the purpose of payment, only the actual area on the external face of the curtain wall with ACP Cladding (including width of groove) shall be measured in sqm. up to two decimal places

10.3 HIGH PRESSURE LAMINATE(EXTERIOR GRADE) CLADDING

Exterior grade laminate of desired and approved color with 6mm thickness on Aluminium Grid Frames Sub Strucutre consisting of AL Box Section Anodized at 60 Micron, Minimum 2mm Thickness & Accessories Includes L & T profiles of Aluminium , Anchor Fastners, Nuts & Bolts, Self Tapping Screws , Load Brackets etc with MBE Grade and Blind coloured non corrosive of size 25 x 10 mm Aluminium Rivets etc

10.4 STRUCTURAL GLAZING:

All component/parts/ fittings of Structural glazing i.e. Aluminium, Stainless steel, Silicone sealant, Gasket, backer rod, fire stop cum smoke barrier, Fasteners, Glazing (Spandrel glass, Colour tinted float glass, IGUs, DGUs, Vision Panels etc.), Insulation material, Shadow Boxes, Hardware etc shall be as per CPWD specifications/ item description. Door in structural glazing to be provided as Aluminium glazed door with 6 mm toughened glass.

Structural analysis & design and preparation of shop drawings for the specified design loads conforming to IS 875 part III (the system must passed the proof test at 1.5 times design wind pressure without any failure), including functional design of the aluminum sections for fixing glazing panels complete and all required performance test shall be as per CPWD specifications/ item description.

Fabricating of Structural glazing, other technical requirements and measurements will be as per CPWD item description/ specifications

10.5 DRY WAL PARTITION

Frame

Partition upto ceiling height consisting of G.I. frame and board including frame work made of special section power pressed/ roll form G.I. sheet with zinc

Dash fastener of or metal screws with nylon plugs, bolts and nuts, anchor fastener or metal screws with nylon plugs, dry wall screws etc as per manufacturers specifications

The boards are to be fixed to the frame work with joints staggered to avoid through cracks, M.S. fixing channel to be provided at the

© 2022 MECON Limited All rights reserved

horizontal joints of two boards, fixed to the studs using metal to metal flat head screws.

After jointing, finishing to a flush finish with recommended jointing compound, jointing tape, angle beads at corner, joint finisher and two coats of primer suitable for board.

i. Fire rated Glass Reinforced Gypsum (GRG) Plaster board conforming to IS:2095 (Part 3), IS:1996 (Board with BIS certification marks) or Plain Gypsum Plaster board conforming to IS:2095 (Part 1), IS:1996 (Board with BIS certification marks)

   Minimum thickness of Partition (12.5 mm thick board with Double skin) will be 75 mm overall (minimum) until otherwise mentioned in contract specifications/ Drawings.

ii. Calcium Silicate Board made with Calcareous & Siliceous materials reinforced with cellulose fiber manufactured through autoclaving process with Compressive Strength 225 kg/sq.cm, Bending Strength 100 kg/ sq.cm

iii. Multipurpose cement board reinforced with cellulose fibre manufactured through autoclaving process (High pressure steam cured) as per IS: 14862 with suitable fibre cement screws

iv. Multipurpose cement bonded wood particle board manufactured as per IS: 14276 with suitable cement bonded board screws Minimum thickness of Partition (8 mm thick board with Double skin) will be 66 mm overall (minimum) until otherwise mentioned in contract specifications/ Drawings.

10.6 STAINLESS STEEL RAILING:

Stainless steel (Grade 304) railing made of Hollow tubes, channels, plates etc., including welding, grinding, buffing, polishing and making curvature and fixing on the top of the floor or the side of waist slab with suitable arrangement

Fitting with necessary stainless steel nuts and bolts, necessary accessories & stainless steel dash fasteners etc

Stainless steel railing with Glazing to be provided with 12 mm thick Toughened glass as per contract specifications/ Drawings

11.0 LANDSCAPE

11.1 SOFT LANDSCAPE

11.1.1 Scope of work

© 2022 MECON Limited All rights reserved

The contractor shall provide all horticultural operations and services specified in the drawings / Technical specification or specified herein or both, including labour, equipment, services and transport for all plant materials, good earth, top soil, manures, pesticides etc. completing the entire work within the scheduled time.

The work will also include trenching, making pits, mixing suitable quantity of good earth, manures, staking, mulching etc. refilling the excavated trenches, tree pits etc. all complete to achieve the desirable landscape as conceived by Engineer in charge in the scheme drawings.

In order to achieve this, the Contractor shall prepare and issue all required working drawings and get them approved by EIC.

11.1.2 Special condition

- The contractor shall without any additional charge to the EIC renew any dead or defective plant material and shall fully maintain including watering, de-weeding etc. of the whole landscape as mentioned above.
- The member of and species of plant material may vary according to site condition and other design reasons and only the final count at site will be considered for payments.
- While executing the work, the contractor shall ensure that existing cables / pipelines, structural members, fittings of any kind are not damaged; the same shall be set right at no extra cost to the owner.
- Contractor shall follow GRIHA or IGBC guidelines as per the project requirement.
- Contractor shall submit the shop drawings and get them approved before start the work.

11.1.3 General requirement of Plants

- Plants shall be typical of their species and variety, well-developed branches, well foliated with healthy root system
- Plants shall be free from defects and injuries. They shall be free of diseases and insects. Plant root system shall be maintained moist at all times till actual planting.
- All trees soon after planting, shall be properly supported with stakes made of bamboo sticks or any hardwood and they shall go at least 300 mm below ground.

© 2022 MECON Limited All rights reserved

- The height of the plants will be measured from top of the pots.
- There should be proper drainage in pots for plants, no stagnation of water.
- The flowering plants should also have proper flowering and should be true to the variety.
- In case of flowering pots flower should be on bud stage / semi bloom stage.

11.1.4 Ground preparation

- Leveling and Rough Dressing

  All horticultural operations shall start with trenching/ excavating up to 300mm of existing soil. This will be valid only if the top soil is favorable for planting.

  In case the soil quality is poor due to construction work, the soil will be replaced by a mixture of Good earth and manures as per specification.

  The trenched ground, after rough dressing shall be flooded with water in order to enable the soil to settle down. Weeds and other vegetation which appear on the ground shall be thoroughly uprooted and disposed.

  After the trenching is done and/or good earth mixed with manure is evenly spread, Rough dressing will be done. In rough dressing, soil below shall be broken down to particles of size not more than 10mm in any direction.

- **Fine Dressing**

  Sight unevenness, ups and downs and shallow depressions shall be removed by fine dressing the surface to the formation levels of the adjoining land, as directed by ER/PMC and adding suitable quantities of Good earth, brought from approved source, if necessary. In fine dressing, the soil at the surface and for 40mm depth below shall be broken down to particle of size not exceeding 6mm in either direction.

- **Mounding**

  In addition to general spreading of topsoil etc., additional soil will be added in areas that are to be mounded as per Landscape drawings.

© 2022 MECON Limited All rights reserved

11.1.5 Basic materials

- **Good Earth**

  The soil shall be suitable for gardening free from pebbles/ boulders, murum, rocks, stones, brick bats, building rubbish, cement, plastic and any other foreign materials. The earth shall be free from clods or lumps of sizes bigger than 75mm in any direction. The pH value shall range between 6.5-7.5.

- **Farmyard manure**

  It shall be well decayed, free from grits, insects and other unwanted material.

- **Vermicompost**

  It should be collected from approved sources. P)roper sieving has to be carried out before applying to the fields.

- **Pesticides**

  This shall be organic to the extent possible depending on the quality of soil. Neem based organic pesticide either in liquid or powdered from will be used. The insecticides shall be from approved manufacturer and shall be applied as specified by the manufacturer.

- **Mixing of Good Earth & Manure**

  The earth to be used shall be broken down to particles and will be thoroughly mixed with manure/ vermicompost / pesticide in desirable proportion mentioned in specification of different types of vegetation.

11.1.6 Planting processes

- **Trees**

  Trees shall be planted in pits of size 750x750x750mm excavated neatly. They will be filled up with Good earth, river sand and manure / vermicompost in a ratio of 3:1:1.

  However, the requirement of sand will be determined after seeing the soil quality in the area.

  The pits will be properly watered after almost 50% is filled up and the balance 50% after the soil is more or less settled.

© 2022 MECON Limited All rights reserved

The item for planting includes supply, making pits, mixing media etc and filling the pit completely and leveling after the tree is planted.

Height refers to the vertical height of the plant from the stem at ground level to the topmost branch or tip.

Generally, all trees shall be minimum 2.5M high after planting with respect to the Ground level. The stem dia after planting, at 150mm from Ground Level shall be around 100mm or more.

Mulching shall be done with insect free cut straw in an average thickness of 75mm.

Staking shall be done with longitudinally cut bamboo tied with commonly used eco-friendly jute fibre threads.

Watering cycle

In dry summer months, the tree pits will be flooded manually twice a day, once between 7 and 8pm and once between 5 and 6pm. In other months when the humidity is high and the temperature is below 35 degree Celsius, watering will be done once a day, preferably in the morning. However, the contractor will use his own judgment to assess water requirement at a particular season and prevailing climate.

- **Shrubs**

Shrub beds shall be 300mm deep and filled with Earth, sand and manure in the same proportions mentioned above.

A saucer shall be created around each shrub to facilitate watering. Watering shall be done immediately after planting. Planting shall never be done in dry climatic condition and during the noon time.

Shrubs shall be minimum 500mm high after planted. Spacing shall be as per drawing or intent of the Landscape design.

Wherever applicable, multi-stemmed shrubs will be chosen for planting.

Mulching with cut straw free of insects shall be done after planting to a thickness of 75mm.

Watering Cycle

© 2022 MECON Limited All rights reserved

Shrubs will be watered once a day, preferably in the morning. However, the contractor will use his own judgment to assess water requirement at a particular season and prevailing climate.

- **Ground Covers**

Soil preparation shall be similar to what has been mentioned above. Ground covers shall be planted at spacing to achieve dense green cover and nowhere soil shall remain exposed. Minimum size shall be 150mm. Pits or trenches shall not be less than 150mm. After the plant material gets settled, more plants may be required to get dense green effect as per guidance of the EIC at site.

50mm thick Mulching shall be applied with insect free cut straw.

Watering Cycle

Ground covers will be watered once a day, preferably in the morning. However, the contractor will use his own judgment to assess water requirement at a particular season and prevailing climate.

- **Lawns**

This operation shall start after the fine dressing work and mounding is completed as per design and drawings. Good earth, river sand and manure (cow-dung, vermin-compost etc.) are mixed in a proportion of 3:1:1. The soil should be adequately wet and ground smoothly finished.

The source shall be approved prior to supply to site. The planting should be done through dibbling and spacing shall not be more than 50mm in any direction. However, spacing may be moderately varied depending on the climatic and soil conditions and soil conditions and the location. Dead grass and seeds etc. shall not be planted. The contractor shall be responsible for a thick smooth Lawn, free from weeds and is fit for mowing. At the time of handover grass to be 50mm thick.

Any irregularities arising in ground due to watering or any other reasons shall be corrected by adding spreading additional quantities of earth manure mix.

For the purpose of Lawns, Mexican Grass from approved source shall be used. Grass samples shall be approved by the EIC before planting.

Watering Cycle

© 2022 MECON Limited All rights reserved

Lawns shall be watered by sprinklers thoroughly once a day. There should not be any water logging due to the watering process. However, the contractor will use his own judgment to assess water requirement at a particular season and prevailing climate.

11.1.7 Landscaping in podiums / terrace

All Masonry work that would be attached with Soil shall be treated with water proofing as per civil specification. Adequate drainage system as per Civil / Plumbing specification shall be provided in order to drain out the extra water added for the plants. The rich soil content should not be allowed to be drained and adequate measures and technique shall be applied to stop soil to be drained.

Polyester non woven geo-textiles fabric of approved make shall be used in all sunken areas, podiums, planters etc. The polyester fibers will form a network that will retain dimensional stability in all directions. The material shall be resistant to Chemicals normally available in soil and also the micro-organisms and should not be affected by soil pH value between 2 to 10. Mass per unit area shall not be less than 150 gram per sqm and width shall not be less than 1.1mm.

Cellular HDPE drain boards shall be used as per drawing in all terraces / podiums, minimum 30mm thick with a compressive strength of 100 t per sqm. The drain boards shall be Biological and chemical resistant. Drain boards shall be approved by EIC before procurement.

The remaining part of the sunken portion shall be filled with soil mixture made of Good Earth, river sand and Manure / vermicompost in 3:1:1. However, proportion of River sand shall be decided finally at site depending on the quality of Good earth. If, sand is not required to be mixed, Good earth and manure shall be mixed in 4:1 proportion. The soil mix shall be adequately compacted with water before normal planting process starts.

11.1.8 Maintenance

- The Contractor shall be fully responsible for maintaining the entire soft Landscape for 6 months from the dated of Virtual completion.
- Virtual completion certificate shall be issued by the EIC / CLIENT.
- Maintenance shall cover irrigation, general care of all materials including all necessary consumables.

© 2022 MECON Limited All rights reserved

- All dead plant materials shall be immediately replaced by the contractor with same species having similar size and healthy condition.

- Between each watering, the soil shall be loosened everyday initially, till the time the plant is settled for all species except Grass. After the plant is well settled, loosening of soil may be carried out every 3rd day.

- Pruning and trimming shall be done strictly as per instructions from EIC. Pruning to achieve a particular shape or height shall be as per drawing or items in Bill of Quantities.

- Thinning will be done to remove growth that is weak or has injuries. The intensity of thinning will be as per site condition.

- Regular removal of weeds shall be Contractor's responsibility.

- Pesticides will generally be of organic variety like Oil of Neem cake / Powder.

- If in case the infection or disease cannot be handled by organic agents, chemical pesticides will be used only after permission of EIC.

- The entire Landscaped area will be kept clean by the agency free of cost for the 6 months maintenance period.

11.1.9 Irrigation system

The Contractor would plan an effective Sprinkler based Irrigation system for the entire Landscaped Area. For this purpose, a shop drawing will be submitted for prior approval.

In areas where dense planting has been done with trees, an underground water supply network system consisting of PVC pipes of required dia with outlets above ground level at suitable locations at a spacing not more than 10 to 12m shall be provided. Flexible PVC pipes shall be used to draw water from these outlets for watering. The Contractor shall submit a complete network drawing for approval of EIC / Client / Landscape Architect.

11.2 HARD LANDSCAPE

a) All materials to be used in construction shall be subject to approval of Engineer in Charge (EIC) The contractor shall apply sufficiently in advance with samples of the materials including the supporting test results from the approved laboratory and other documentary

© 2022 MECON Limited All rights reserved

evidence from the manufacturer wherever applicable and indicating the types of materials and their respective sources. The delivery of materials at site shall commence only after the approval of the quality, grading and sources of the materials by the Engineer in Charge (EIC).

b) The quality of all materials once approved shall be maintained throughout the period of construction and periodical tests shall be carried out to ensure that it is maintained. Such routine tests shall be listed under the different materials and/or as may be ordered by the EIC from time to time.

c) During use of this specification, the latest publication of codes as on date shall be referred to. BIS or IRC, adoptable British Standards or other International Standards shall apply.

d) Any material brought to site which, in the opinion of the EIC is damaged, contaminated, deteriorated or does not comply with the requirement of this specification shall be rejected. The Contractor at his own cost shall remove from site any and all such rejected materials within the time specified by EIC.

11.2.1 Materials for construction

- **Aggregates**

It shall comply with the requirements of IS: 383-1970 "Coarse and fine Aggregates for concrete". They shall be hard, strong, dense, clean and free from veins and adherent coating, vegetable matter and other deleterious substances; and shall be obtained from approved sources. Aggregates shall not contain any harmful material such as pyrites, coal, lignite, shale or similar laminated material, clay, alkali, soft fragments, sea shells and organic impurities in such quality as to affect the strength or durability of concrete. Aggregates which are chemically reactive with alkalis of cement shall not be used. Aggregates which are not sufficiently clean shall be washed in clean fresh water to the satisfaction of the EIC. The grading shall conform to IS: 383-1970 and shall be within the limits of Grading Zone-III. The maximum size of particle shall be 4.75mm and shall be graded down. Sand containing more than 10% of fine grains passing through 150 micron sieve or having the fineness modulus less than 2 shall not be used for concrete work. The nominal maximum size of the aggregates for each mark of concrete or for each type of work shall depend upon the description of the particular item in the Schedule of item and/or according to relevant clauses of IS: 456-1978. The aggregates shall be well-graded and the grading shall conform to relevant requirements of IS: 383-1970 depending upon the maximum nominal size as specified or as the required.

© 2022 MECON Limited All rights reserved

Stone chips shall be crushed or broken from hard stone obtained from approved quarries of igneous or metamorphic origin. The stone chips shall be hard, strong, dense, durable or angular in shape. It shall be free from soft, friable, thin , flat, elongated and flaky pieces and free from dirt, clay lumps, and other deleterious materials like coal, lignites, sit, soft fragments, and other foreign materials which may affect, adversely the strength & durability of concrete. The total amount of deleterious/foreign material shall not exceed 5% by weight according to relevant clause of IS: 383-1970.

If found necessary the stone chips shall be screened and washed before use.

- **Cement**

Ordinary Portland cement/Portland slag cement complying with the requirements of IS: 269-1989 and IS: 455-1989 respectively shall be used for making plain and reinforced concrete, cement grout and mortar.

Other types of cement may be used depending upon the requirements of certain jobs with the approval of the EIC. These shall conform to the following standards:-

Portland Pozzolana ..... IS: 1489-1991

Rapid Hardening Portland Cement ..... IS: 8041-1990

43 Grade Ordinary Portland Cement ..... IS: 8112-1989

53 Grade Ordinary Portland Cement .... IS: 12269-1987

- **Admixture**

Admixture to concrete shall not be used without the written consent of the Engineer in Charge (EIC). When permitted, the Contractor shall furnish full detail from the manufacturer and shall carry out such test as the EIC may require before any admixture is used in the work. Admixture shall procured from approved and reputed manufacturer.

- **Steel**

Reinforcing bars for concrete shall be round steel bars of the following types as may be shown on the drawing:

Plain mild steel bars conforming to Grade-I of IS: 432-1982 "Mild Steel & Medium Tensile Steel for Concrete Reinforcement".

© 2022 MECON Limited All rights reserved

"High strength deformed steel bars conforming to IS: 1786-1985 for Concrete Reinforcement".

Reinforcement fabrics conforming to IS: 1566-1982 "Hard Drawn Steel Wire Fabric for Concrete Reinforcement".

All reinforcement bars shall be of uniform cross sectional area and be free from loose mill scales, dust, loose rust, coats of paint, oil or other coatings which may destroy or reduce bond. Unit weight of reinforcement bars conforming to IS: 1786-1985.

- **Fly-ash Bricks**

The specific conditions as a laid down by EIA, Fly-ash to be used in construction. The brick shall be machine molded and made from suitable Fly-ash, Sand, Cement and Water. The brick shall be free from cracks and flaws.

The standard size of bricks shall be 250mm. (length) X 125mm (width) X 75mm. (height). The bricks when tested in accordance with the procedure laid down in IS: 3945 (part-I) - 1992 shall have a minimum average compressive strength of 50kg. Per Sq.cm.

The bricks when tested in accordance with the procedure laid down in IS:3495 (part-II) - 1992 after immersion in cold water of 24 hours, water absorption shall not be more than 20 percent by weight.

- **Concrete Blocks**

The blocks shall be machine molded and made from suitable Fly-Ash, Sand, Cement and Water. The bricks shall be free from cracks and flaws.

The standard size of solid blocks and hollow blocks shall be 400 mm (Length) X 200 mm (Width) X 200 mm (height). When tested at site the blocks shall have a minimum average compressive strength of 75 kg. Sq.cm. The hollow blocks shall be with 2/4 cavities per block.

A suitable hard standing shall be prepared for storing blocks They shall not be off-loading by tipping from vehicles, but shall either be off-loaded by hand or in pellets by means of a forklift truck, crane or similar lifting device. The shall not be stacked directly on sulphate bearing ground. They shall be stacked on newly cast hard-standing. Blocks shall be arranged in orderly stacks and used approximately in the order in which they were delivered. Broken and rejected blocks shall be stacked separately and removed from site as soon as possible.

© 2022 MECON Limited All rights reserved

Block shall not be used until one month after casting. All blocks shall be well soaked before being used and tops of walls left off shall be wetted before work is restarted. Blocks shall be laid on a full bed of mortar and all joints filled and thoroughly flushed up as work proceeds. All joints shall be uniform and shall not exceed 12 mm. The maximum height of block work built in a day shall be 1.2 m and the Contractor shall be fully responsible for ensuring the stability and strength of the work as they proceed. Any wall of partition necessarily left at different levels must be racked back. All perpends, quoins, internal and external angles etc. shall be kept strictly true and square and the whole properly bonded together and leveled round at each floor.

Partitions shall be bonded to the main walls by toothing every fourth course into the main walls to a depth of not less than 100mm.

Block should be manufactured with minimum cement content of 20 kg. per cubic meter.

- **Stone (Granite, Sandstone, Marble)**

Stone used shall be strong, durable, dense, compact, close grained, homogeneous, fire resistance and shall be obtained from sources approved by of Engineer in Charge (EIC). Stone shall additionally be hard, sound, free from crack, decay and other flaws or weathering and shall be easily workable. Stones with round surfaces shall not be made use of.

11.2.2 Pavings

- **Marble, Kota or other stone flooring / paving**

These shall be hard, sound, dense and homogeneous in texture. It shall be free from stains, cracks, decay and weathering. Samples must be approved by the of Engineer in Charge (EIC) before laying. The minimum thickness of marble shall be 20mm and 25mm for Kota stone or as specified.

The joints shall be cleaned and then grouted with white cement mixed with pigments.

Stone pavers on structures shall be laid over a 20mm thick dry sand setting bed, which will be laid on approved lightweight structural fill.

Stone pavers on grade shall be laid on 20mm thick dry sand setting bed which will be laid over 100 thick PCC (1:3:6). PCC will be laid over 230mm thick boulder soling.

© 2022 MECON Limited All rights reserved

Stone used shall be pre-polished or flame finished wherever mentioned.

- **Concrete Unit pavers**

Concrete Unit pavers shall be pre-cast with chamfered/straight edges as per instruction of the Engineer in Charge (EIC). Pre-cast concrete Blocks shall be made in a proportion of 1 cement: 2 coarse sand: 4 graded stone aggregates 20mm nominal size. Unit pavers shall be 80mm thick in case of Type A pavers and 50mm thick in case of Type B pavers. Pavers shall be laid over 20mm dry sand setting bed. When laid on grade, sand bed shall be laid over 100 thick PCC (1:3:6). PCC will be laid over 100mm thick bounder soling. Compressive strength of the pavers shall not be less than 2502 kg/Sq.cm.

- **Cement Concrete Paving**

CC paving shall be in a proportion of 1 cement: 2 coarse sand: 4 graded stone aggregates 20mm nominal size. Such paving shall have nominal reinforcement as per structural drawings. On grade, this will be 150 thick and shall be laid over 200mm thick Bounder soling while on structure this will be laid over lightweight structural fill as per civil specification.

- **Gravel paving**

60mm thick compacted crushed stone of nominal size 25-30mm shall be laid dry on a filter fabric (synthetic, Ref point no. 7 above). The fabric shall be evenly laid on 200mm thick Bounder soling. Crushed stones shall be approved color and sizes. Crushed stone shall be made out of river pebbles.

- **Grass jointed pavers**

The pavers shall be procured from approved sources as per vendor list. The minimum size shall be 305 X 305 with a thickness of 60mm. Tiles shall be of GRC and the compressive strength shall not be less than 350 kg per Sq.cm.

11.2.3 Water features

- **Civil Work**

All water features shall be made of Reinforce Cement Concrete as per structural requirements. Glass Mosaic tiles of approved make

© 2022 MECON Limited All rights reserved

shall be used. Tiles shall be laid over 20 Cement mortar (1:4) on floors and 12 Cement mortar with water proofing admixtures as per manufacturer's specification.

- **Plumbing And Electrical work**

The Contractor shall provide with vendor drawings issued by Fountain Manufacturer for all these works based on Schematics requirements. The capacities of Pump etc. shall be so as to get the desired effect. Successful commissioning will be part of the scope of the Fountain Manufacturer/supplier and the Contractor.

Submersible pumps shall be of approved makes. All pipes shall be of UPVC and of approved make. All submersible lights shall be of approved make.

The work will include all required accessories like Sand / Bio filters, Electrical panels, Cleaning Kits, Chlorine feeders etc. with all complete.

12.0 GENERAL FINISHING:

If finishing items for building are not mentioned in Contract technical specifications/ drawings, following finishing items to be considered:

Sl. No.	Location	Flooring	Skirting/ Dado	Walls	Ceiling	Remarks
1.	Electrical room/ Electrical Panel Room	9.1mm Thick (approx.) Double Charge Vitrified Tile of Approved Shade & Make	150 high Vitrified Tiles (description same as floor)	Acrylic Emulsion Paint over wall putty	Acrylic Emulsion Paint over wall putty	-
2	Lobby, Corridor, Reception area, Office, Incharge/ HOD	-Do-	-Do-	-Do-	Calcium silicate board False ceiling	
3.	UPS room	Antistatic PVC Tiles	150 high Antistatic PVC Tiles	-Do-	-Do-	

© 2022 MECON Limited All rights reserved

Sl. No.	Location	Flooring	Skirting/ Dado	Walls	Ceiling	Remarks
4.	AHU Room, store room	40 mm thick (including 12 mm topping) Indian Patent Stone flooring with non metallic hardener.	150 high cement plaster skirting with a floating coat of neat cement.	White Cement Wash	White Cement wash	-
5.	Control Room, PLC room, VFD room,Soft starter room, HMI room	Min. 18 mm Granite stone slab fin. on RCC floor slab/ 10 mm thick minimum 600x600 mm (approx) Granite tiles fin. on false flooring	150 high Min. 18 mm Matching Granite stone skirting/ 10 mm thick matching Granite tiles	Aluminium composite panel (ACP) wall cladding	Aluminium false ceiling with suitable hanging arrangements, accessories etc & under-deck insulation	
6.	Storage area (outside)	52 mm thick cement concrete flooring with non metallic hardener topping.	150 high cement plaster skirting with a floating coat of neat cement	White cement wash (if applicable)	White cement wash (if applicable)	This is not Applicable for Shed with Structural sheeting
7.	Staircase & all other rooms.	Min. 20 mm Kota stone slab with good finish.	150 high Min. 20 mm Kota stone slab with good finish.	Acrylic Emulsion Paint over wall putty	Acrylic Emulsion Paint over wall putty	Nosing will be with double layer of 25 mm projected kota stone
8.	Toilet, Drinking Water & Janitor	Ceramic Tiles (450x 450 x 7mm min.) of 1st quality of approved finish, shade	2100 high Ceramic Tiles same as floor of approved finish, shade	-Do-	-Do-	

© 2022 MECON Limited All rights reserved

Sl. No.	Location	Flooring	Skirting/ Dado	Walls	Ceiling	Remarks
9	Class Room, Activity Room, Infants Room & Sick Room	2 mm thick Ante-bacterial solvent free epoxy flooring system over a coat of solvent free epoxy primer on minimum 30 days old cleaned & scarified thoroughly with vaccum cleaner 40 mm thick Cement concrete flooring 1:2:4 (1cement: 2 coarse sand:4graded stone aggregate), as per approved colour and shade, all complete	1200 mm high solvent free water based epoxy coating over a coat of solvent free epoxy primer on minimum 30 days old cleaned & scarified thoroughly with vaccum cleaner on cement plaster, as per approved colour and shade, all complete	Acrylic Emulsion Paint over wall putty	Calcium silicate board False ceiling	
10	Kitchen/ pantry	1. 18mm thick kota stone with good finish 2. Granite finished platform at 800 height from FFL.	1. 150 high kota stone (Similar as Floor) 2. 600mm high ceramic wall tiles dado above platform	-Do-	Acrylic Emulsion Paint over wall putty	
11	Play Area, Parking area (outside)	80 mm thick Interlocking paver block	150 High Kota Stone	Exterior Grade acrylic emulsion		

© 2022 MECON Limited All rights reserved

Sl. No.	Location	Flooring	Skirting/ Dado	Walls	Ceiling	Remarks
				paint		
12.	Waiting, pass Section, projector room, room for Attendant ,Room for Biometric Equipment & Gadget, Morcha, PRO, Control Cabin at Gate	9.1mm Thick (approx.) Double Charge Vitrified Tile of Approved Shade & Make	150 high Vitrified Tiles (description same as floor)	Interior grade acrylic emulsion paint over wall putty	Calcium silicate board False ceiling	
13	Doctor's room, EGG, Vision Examination Room, PFT Room, Audiometry Room, Doctor's Rest Room, Nurse's Rest Room, Observation Room, Nurses Station, Change Room, Conference Hall, Industrial, Registration,	9.1mm Thick (approx.) Double Charge Vitrified Tile of Approved Shade & Make	150 high Vitrified Tiles (description same as floor)	-Do-	-Do-	
14.	Medicine Store & Medical Equipments, Pharmacy, Linen Store, Pantry, Record Room,	20mm thick Kota Stone with Good Finish	150 High Kota Stone (Similar as Floor)	Acrylic Emulsion Paint over wall putty	Acrylic Emulsion Paint over wall putty	

© 2022 MECON Limited All rights reserved

Sl. No.	Location	Flooring	Skirting/ Dado	Walls	Ceiling	Remarks
	X-Ray Room,					
15.	Pathology, Biochemistry Room, Dressing/ Surgery Room, Sterilization, Hygiene Lab	2 mm thick Ante-bacterial solvent free epoxy flooring system over a coat of solvent free epoxy primer on minimum 30 days old cleaned & scarified thoroughly with vaccum cleaner 40 mm thick Cement concrete flooring 1:2:4 (1cement: 2 coarse sand:4graded stone aggregate), as per approved colour and shade, all complete	1200 mm high solvent free water based epoxy coating over a coat of solvent free epoxy primer on minimum 30 days old cleaned & scarified thoroughly with vaccum cleaner on cement plaster, as per approved colour and shade, all complete	Interior grade acrylic emulsion paint over wall putty	Calcium silicate board False ceiling	
16.	INSTRUMENTAL ANALYSIS ROOM	Antistatic PVC Tiles	150 high Antistatic PVC Tiles	-Do-	Calcium silicate board False ceiling	
17.	COMPUTER ROOM	-Do-	-Do-	-Do-	-Do-	
18.	SPECTROMETER ROOM	-Do-	-Do-	-Do-	-Do-	

© 2022 MECON Limited All rights reserved

Sl. No.	Location	Flooring	Skirting/ Dado	Walls	Ceiling	Remarks
19.	BALANCE ROOM	-Do-	-Do-	-Do-	-Do-	
20.	Chemical Analysis ROOM	Chemical Resistant Vitrified tiles	150 high Chemical Resistant Vitrified tiles	-Do-	Acrylic emulsion paint over Wall putty	
21.	Spectrometric sample preparation room, raw material sample preprn. & test room, chiller room, store room, gas cylinder room	IPS Flooring (40 mm thk. Including 12 mm topping) with non metallic hardner	150 high Cement plaster skirting with a coat of neat cement with non metallic hardner	-Do-	-Do-	
22.	MCC/ PCC/MLDB/ PDB Room	9.1mm Thick (approx.) Double Charge Vitrified Tile of Approved Shade & Make	150 high Vitrified Tiles (description same as floor)	Acrylic Emulsion Paint over wall putty	Acrylic Emulsion Paint over wall putty	-
23.	Chemical House	Acid resistance tile (minimum 14 mm thick) flooring	2100 high Acid resistance tile dado	Acid proof paint above dado height	Acid proof paint	
24.	Cable Floor, Transformer Room, Pump Room, Ventilation room, DG set room	40 mm thick (including 12 mm topping)Indian Patent Stone flooring with non metallic hardener.	150 high cement plaster skirting with a floating coat of neat cement	Acrylic Emulsion Paint over wall putty	Acrylic Emulsion Paint over wall putty	-

© 2022 MECON Limited All rights reserved

Sl. No.	Location	Flooring	Skirting/ Dado	Walls	Ceiling	Remarks
25.	Utility Room, Dry type Battery room, all other room which is not specified	Min. 20 mm Kota stone slab with good finish.	150 high & Min. 20 mm Kota stone slab skirting with good finish.	-Do-	-Do-	-
26.	Living Room, Drawing Room, Dining Room, Bed Room, Puja Room, Verandah (in Residence)	9.1mm Thick (approx.) Double Charge Vitrified Tile of Approved Shade & Make	150 high Vitrified Tiles (description same as floor)	-Do-	-Do-	

© 2022 MECON Limited All rights reserved

SPECIFICATION FOR CIVIL WORKS
PART – II WORKMANSHIP

CONTENTS

1.0 GENERAL

1.1 Standard

1.2 Supervision

1.3 Temporary Works

1.4 Codes

1.5 Base Lines and Bench Marks

1.6 Setting Out

1.7 Dewatering

1.8 Safety of Existing Work

1.9 Protection of Existing Services

1.10 Handing Over of Work Site

2.0 EARTH WORK

2.1 Scope

2.2 General

2.3 Setting Out

2.4 Site Clearance and demolition

2.5 Classification of Soil

2.6 Method of Excavation

2.7 Excavation of Soils Other than Hard Rock

2.8 Excavation in Hard Rock

2.9 Cutting and Filling for Site Levelling

2.10 Excavation for Trenches

© 2022 MECON Limited All rights reserved

2.11 Excavations for Foundations

2.12 Excess Excavation

2.13 Disposal of Excavated materials

2.14 Backfilling of Trenches

2.15 Backfilling of Foundations

2.16 Filling Under Floors

2.17 Load Bearing Fills

2.18 Turfing

3.0 ANTI-TERMITE TREATMENT

3.1 Scope

3.2 Execution

3.3 Acceptance Criteria

4.0 CONCRETE (PLAIN & REINFORCED)

4.1 Scope

4.2 Materials

4.3 Grades of Concrete

4.4 Mix Design

4.5 Water/Cement Ratio

4.6 Workabilitiy

4.7 Durability

4.8 Trial Mixes

4.9 Nominal Mix Concrete

4.10 Volumetric Mix concrete

© 2022 MECON Limited All rights reserved

4.11 Batching of Concrete

4.12 Water

4.13 Mixing and Transportation of Concrete

4.14 Preparatory Works/Surface Preparation

4.15 Placing and Compaction of Concrete

4.16 Construction Joint & Cold Joints

4.17 Requirements for Concreting in Special cases

4.18 Finishes to Exposed Surfaces of Concrete

4.19 Curing of Concrete

4.20 Testing of Concrete

4.21 Steel Reinforcement

4.22 Shuttering

4.23 Damp Proof Course Concrete

4.24 Grout

4.25 Concreting in Water Retaining Structures

4.26 Application of Live Load

4.27 Foam Concrete

5.0 MASONRY

5.1 General

5.2 Materials

5.3 Selection of Mortars

5.4 Cement Mortar

5.5 Brick work

5.6 Stone masonry

© 2022 MECON Limited All rights reserved

5.7 Hollow Concrete Block Masonary

6.0 PLASTERING AND POINTING

6.1 Materials

6.2 Plastering

6.3 Cement Pointing

6.4 Rough Cast Concrete Facing

6.5 Punning with Lime or Plaster of Paris

7.0 FLOORING, PAVING & FACING

7.1 Scope

7.2 Materials

7.3 General

7.4 Sub-base

7.5 Subgrade

7.6 Cement Concrete Flooring with Integral Finish

7.7 Concrete Flooring with Granolithic Finish (Artificial Stone Flooring)

7.8 Dado & skirting Work (Grey Cement Skirting / Dado)

7.9 Flooring & Facing with Redoxide of Iron (Red Artificial Stone Flooring)

7.10 Glazed Tile Finished Flooring & Facing

7.11 Marble Flooring

7.12 Marble in Facia or Dado

7.13 Flooring/Paving with Hardener like Ironite.

7.14 Chemical resistant tile flooring/facing

7.15 Chemical resistant In-Situ Finished Flooring / Facing

© 2022 MECON Limited All rights reserved

7.16 Acceptance Criteria

8.0 WOOD WORK

8.1 General

8.2 Joinery

8.3 Shrinkage & Tolerance

8.4 Fixing

8.5 Tarring

8.6 Fittings

8.7 Doors, windows & ventilators

8.8 Panelled Shutters

8.9 Glazed Shutters

8.10 Flush Door Shutters

8.11 Other type of shutters

8.12 Inspection

9.0 METAL DOORS, WINDOWS AND ROLLING SHUTTERS

9.1 General

9.2 Fixing

9.3 Fittings

9.4 Normal Steel Plate Doors

9.5 Pressed Steel Doors

9.6 Steel Windows, Sashes, Ventilators, etc.,

9.7 Collapsible Gate (Steel)

9.8 Steel Rolling Shutters and Grills

© 2022 MECON Limited All rights reserved

9.9 Guarantee

9.10 Aluminium Doors. Windows, Frames

10.0 GLAZING

10.1 General

10.2 Doors, Windows and Ventilators.

10.3 Northlight Glazing

11.0 WHITE WASHING, COLOUR WASHING & PAINTING

11.1 Scope

11.2 Materials

11.3 White Washing, Colour Washing

11.4 Cement Primer Coat

11.5 Water Proof Cement Paint

11.6 Oil Bound distemper

11.7 Dry Distemper

11.8 Plastic Emulsion Paint

11.9 Bitumen Painting

11.10 Tarring

11.11 Painting to Timber & Steel Surface

12.0 INTERNAL WATER SUPPLY, PLUMBING, DRAINAGE AND SANITATION

12.1 Scope of work

12.2 Water Supply & Plumbing

12.3 Drainage and Sanitation (Internal)

13.0 EXTERNAL SEWERAGE & DRAINAGE

© 2022 MECON Limited All rights reserved

13.1 Scope of work

13.2 Materials

13.3 Excavation of trenches and pits

13.4 Cast Iron pipes

13.5 Stone ware glazed pipelines (S.W.G)

13.6 Man holes

13.7 Marker plates

14.0 ROAD WORK

14.1 General

14.2 Excavation for roadway

14.3 Embankment & subgrade construction

14.4 Granular Sub-Base (GSB)

14.5 Water Bound Macadam (WBM)

14.6 Wet Mix Macadam

14.7 Bituminous Macadam

14.8 Dense Bituminous Macadam

14.9 Bituminous Concrete

14.10 Dry Lean Cement Concrete (DLC) sub-base

14.11 Cement Concrete Pavement

14.12 Miscellaneous Items

15.0 WATERPROOFING TO ROOFS, BASEMENTS & WATER PROOFING PAINTS

15.1 Scope

© 2022 MECON Limited All rights reserved

15.2 Material

15.3 General Workmanship

15.4 Painting with Hot Bitumen

15.5 Painting with Bitumen Emulsion

15.6 Waterproofing of Roof

15.7 Waterproofing for Basement

15.8 Surface Application

15.9 Guarantee

15.10 Waterproofing with Non-shrink polymeric waterproof grouting compound.

16.0 MISCELLANEOUS

16.1 False Ceiling

16.2 Wooden Partition

16.3 Expansion and Isolation Joints

16.4 Barbed Wire Fencing

16.5 Chain link fencing

GENERAL

1.1 Standard

A high standard of workmanship in all trades will be required. The Contractor shall ensure that only skilled and experienced workmen are employed.

1.2 Supervision

The Contractor's supervising staff shall be fully qualified and experienced in the types of work being carried out under their supervision and shall be capable of ensuring that work is executed efficiently and as per specification.

© 2022 MECON Limited All rights reserved

1.3 Temporary works

Where required, the Contractor shall furnish such details of his temporary works as may be called for by the Engineer and the Contractor shall satisfy the Engineer as to their safety and efficiency. The Engineer may direct that temporary works, which he considers unsafe or insufficient, shall be removed and replaced in a satisfactory manner.

1.4.0 Codes

1.4.1 The years of publication against various standards, referred in the 'list of IS and IRC Codes (ANNEXURE-A)' of this specification correspond to the latest standards as on date of preparation of this specification. During use of this specification in future, the latest publication as on date shall be referred to. Where standards are not yet published by the BIS or IRC, adoptable British Standards or other International Standards shall apply.

In case of any conflict in meaning between these specifications and those of BIS or IRC, or British/International Standards, the provisions of these specifications shall prevail.

1.5 Base lines and bench marks

The Contractor shall establish and maintain, to the satisfaction of Engineer, the base lines and bench marks, based on which the works are set out. Where such base lines and bench marks are provided by the Engineer, the Contractor shall maintain these throughout the period of construction without causing any disturbance to them.

1.6 Setting out

The Contractor shall set out all the works to be executed by him, in line with the standard base lines, levels, position and bench marks and truly as per drawings within the accepted tolerance limits at no extra cost to Owner. The Contractor shall be solely responsible for the setting out of all the works, to be executed by him and the approval of such setting out by the Engineer shall in no way absolve the Contractor his responsibility for carrying the work to the true lines, levels and positions as per drawings.

1.7 Dewatering

The Contractor shall carry out all the works, in dry and workable condition and maintain the same in dry condition till the final handing over of works at no extra cost to the Owner. For this the Contractor shall make all the

© 2022 MECON Limited All rights reserved

necessary provisions of dewatering, wherever necessary, to the entire satisfaction of the Engineer.

1.8 Safety of existing work

Before taking up any construction adjoining other property or existing work, the Contractor shall take all steps necessary for the safety and protection of such property or work at no extra cost to the owner.

1.9 Protection of existing services

The Contractor shall take all precautions necessary to prevent damage to or interference with underground or overground services such as cables, drains, piping or piles, whether shown on drawings or not. Equipment etc., mounted in position shall be protected against falling debris etc., by means of tarpaulin or such other material at no extra cost to the owner.

1.10 Handing over of work site

On completion of work, the Contractor shall remove all rubbish, debris, surplus materials, temporary work etc., from the site. The site shall be handed over in a tidy and workmanlike manner at no extra cost to the owner.

2.0 EARTH WORK

2.1 Scope

This chapter deals with earth work and excavation for civil works in site, formation/oversite leveling, foundations, cutting and grading for roads/pavement and railways, canals, embankments other than water retaining embankments trenching for drainage and other burried services and the like.

2.2 General

The Contractor shall carry out the excavation strictly to the lines and levels, in conformity with the drawings or instructions of the Engineer.

2.3 Setting out

Before commencement of earthwork block levels of existing ground shall be taken by the Contractor jointly with the Engineer, plotted and signed in token of acceptance of ground levels. Excavation shall not be commenced until the initial ground levels have been recorded and accepted. Reference lines, bench marks and base lines shall be set out by the Contractor for control of earthwork operation. Setting out shall be done with pegs, blocks,

© 2022 MECON Limited All rights reserved

bamboo poles or rails, marking boundaries or centre lines, as the case may be, and the same maintained for reference and future checking. Chainaie stones at regular intervals shall be set up for embankments. All setting out operations shall be got checked and approved by Engineer. However, such checking and approval by the Engineer shall in no way absolve the Contractor of his responsibilities for carrying out the work to the true lines, levels and positions as per drawing, and in case any error is noticed at any stage in the contractor's work, it shall be corrected/rectified by him without any cost to the Owner.

2.4 Site clearance and demolition

The site shall be cleared of all trees, stumps, roots, brush wood, bushes and other objectionable materials. Useful and saleable material, if any, shall be the property of the owner and shall be stacked properly as directed by the Engineer. The areas to be covered with embankments shall be stripped of top soil to required depths to expose acceptable founding strata. Top soil unsuitable for use in embankment construction and other fills shall be disposed off as directed. All combustible materials shall be stacked and burnt in locations sufficiently remote to eliminate all danger of fire hazards. All old concrete, brick works and drains which interfere with construction works shall be dismantled with the approval of the Engineer taking all necessary precautions prescribed in safety specification. Top soil which is suitable for use in construction work shall be stockpiled for later use. Other objectionable materials such as trash, debris, stones, brick, broken concrete, scrap metal etc., shall be disposed off as directed by the Engineer. Payment for cutting and removal of trees, stumps, dismantling existing structures and stripping shall be regulated by the description in the Schedule of Items or Part V of these specifications.

2.5 Classification of soil

The Engineer will decide the class of any particular soil. Classification of soil shall be as under and the decision of the Engineer shall be binding on the Contractor:

A) Ordinary Soil

Soils which yield to ordinary application of pick and shovel, phawra rake or other ordinary digging implements (including earth moving equipment such as bulldozer, shovels without resorting to blasting) without offering much resistance, shall be classified as ordinary soil. This includes organic soil, turf, sand, gravel, loam clay, mud, peat, black cotton soil, soft shale and loose moorum etc.

© 2022 MECON Limited All rights reserved

B) Hard Soil

This comprises of all soils that cannot reasonably be excavated by the above mentioned digging implements, but can be excavated with close application of pick axe or scarifiers or jumpers to loosen. This includes compact moorum, stiff clay, hard shale, cobble stone etc.

C) Soft /Decomposed Rock

This comprises of rock or boulders which may be quarried or split with crow bars, pavement breakers etc., This include lime stone, sand stone, weathered rocks and hard conglomerates etc .and existing structures embedded in earth and tarred macadam roads, pavements, met in the excavation. The fact that contractor resorts to blasting for his own reasons shall not mean that the rock is hard and classified as hard rock.

D) Hard Rock

This comprises of rocks which require blasting for excavation. Where blasting is prohibited, excavation has to be carried out by chiseling, wedging or any other agreed methods.

2.6 Method of excavation

The Contractor may carry out excavations, filling and compaction by any method considered most suitable, and befitting the site conditions subject to any stipulations contained in the contract and the specifications. All excavations shall be required to be kept completely free from water, from whatever source it may come, during the construction. No foundation work shall be taken up until the surfaces are properly drained.

2.7 Excavation of soils other than hard rock

Excavation shall be carried out in the most expeditious and efficient manner to the lines and levels as indicated in drawings or as directed by Engineer. Prior approval of the Engineer shall be taken for the method to be adopted for excavation including dimensions, side slopes, dewatering, shoring etc., Such approval shall not make the Engineer responsible for any consequent damage or loss caused. All precautions shall be taken to preserve the material below and beyond line of excavation in soundest condition. All damages done beyond limits of excavation shall be made good by the Contractor at his own cost in a manner approved by the Engineer. All excavated materials shall be removed to spoil heaps, dumping yards or transported for filling as may be necessary. When soil heaps are formed for future use, heaps shall be protected from washing away due to rain or surface run off. The sides of excavation shall be

© 2022 MECON Limited All rights reserved

maintained in stable condition by adequate stepping and batter. To prevent entry of surface water and accumulation of subsoil water in excavated areas, suitable drainage arrangements as may be needed and directed by Engineer, shall be provided and maintained. Pumped out water shall be drained off properly avoiding damage to other existing works. If any pipelines, cables or service lines are likely to be exposed, excavation around these services shall be carried out manually and all such services shall be adequately supported and protected at no extra cost.

Excavation shall be carried out in any material encountered including road surfaces, pavements, burried parts of old foundations, pits or other structures. Excavated materials shall be placed beyond 1.5 metres of the edge of the excavation pit/trench or half the depth of the pit/trench whichever is more or further away as directed by the Engineer. Sumps made for dewatering must be kept clear of the foundations.

In firm soil the sides of the trenches shall be kept vertical upto a depth of 2.0m from the bottom and for a greater depth, trench shall be widened by allowing steps of 50cm on either side after every 2.0m depth from the bottom, so as to give a vertical side slope of 1/4: 1. Where the soil is soft, loose or slushy, the width of the steps shall be suitably increased or sides suitably sloped or suitable shoring and strutting provided as directed by the Engineer. For trenches deeper than 2.0m, the Contractor shall obtain detailed instruction from the Engineer in writing regarding the stepping, sloping of sides or shoring and strutting to be done. For these bye-works, no extra cost will be paid to the Contractor.

2.8 Excavation in hard rock

Where hard rock is met and blasting is considered necessary for its excavation, the Contractor shall intimate the Engineer in writing. Excavation in hard rock shall be done either by blasting or chiseling or by such other agreed methods as may be required. Levels of hard rock surface shall be taken and got approved by Engineer before start of excavation. Blasting shall be permitted only when proper precautions are taken for protection of persons, works and property. The Contractor shall obtain the necessary licence for procuring, storing and using explosives.

Blasting operations shall be carried out by a licensed Blaster. The quality and quantity of explosives, size and spacing of holes depth of holes etc., shall be such that they will neither open seams nor damage or shatter the rock beyond the specified lines of excavation. A tolerance of 150 mm will however be allowed beyond the excavation lines. As excavation approaches final stages, the depth of holes and the amount of explosives used shall be reduced progressively to avoid over breakage or damage to founding strata. Any fissures, cracks and voids below prescribed depth of excavation shall be corrected by removing loose pieces, shattered or

© 2022 MECON Limited All rights reserved

affected rock and replaced by lean concrete of M-5 grade or (1:5:10) cement concrete in the case of foundations. Where excavated surface is to receive structural concrete, the surface shall be cleaned of dust and other objectionable materials.

In cases where blasting, though otherwise required, is prohibited because of any reason, the excavation shall be carried out by chiseling, wedging or such other agreed methods. All materials excavated from blasting, chiseling or any such methods shall be stacked for measurement as directed by Engineer.

2.9 Cutting and filling for site leveling

Excavation and filling operations for site leveling shall be so planned and executed, that transportation and re-handling are minimised. The sides of excavation and fills shall be maintained in stable condition by adequate batters, stepping and dewatering. Materials not desirable shall be disposed off in area indicated by Engineer. When it is required to blend the material, it shall be done by selective excavation and filling operation. Wells, ponds, cesspools and water logged areas shall be emptied of water and deslushed before filling. Filling shall be done in horizontal layers not exceeding 300mm in thickness as specified or as directed by the Engineer. All clods shall be broken before placing the fill. Earth moving equipment shall be allowed to ply over the fill to permit compaction. Adequate allowance shall be made for subsidence of fill material. Levels shall be taken and excess or shortfall shall be made good by appropriate cutting or filling.

2.10 Excavation for trenches

Excavation for trenches shall be carried out in materials encountered to enable laying of service lines or drainage channels or any other desired purpose. Excavation shall be done to lines and levels shown in drawings and shall be done providing adequate measures for stability. Vertical wooden sleepers or light rails shall be erected at uniform levels at places where changes of direction and gradients occur. Centre lines shall be marked on horizontal sleepers or rails, laid across the trenches. Depths of excavation and pipe invert levels shall be checked by means of boning rods of appropriate lengths. Trench beds shall be trimmed and rammed with sprinkling of sand or moorum to required gradients for continuously supporting the pipelines. Trenches shall be locally deepened and widened to receive sockets and permit joints to be inspected.

Timbering

In case of trenches, tunnels, channels, drains, manholes, chambers, basement and other places where the soil is not capable of being retained without the support, timbering as directed by the Engineer shall be resorted

© 2022 MECON Limited All rights reserved

to. It shall be the responsibility of the Contractor to take all the necessary steps to prevent the sides from collapsing.

2.11 Excavations for foundations

Excavation for foundation shall be done to the lines and levels indicated in the drawings. Excavated material shall be transported and stored at convenient spots for reuse in back filling of foundations and other fills. Surplus material shall be transported, spread and levelled at dumping areas. Side slopes of excavation and/or shoring shall be adequate from consideration of stability and working space. When so required and authorised by Engineer, the sides of excavation shall be protected with proper shoring, strutting, sheeting and sand bags etc., These shall be removed only when work in the pit is completed, with the approval of the Engineer. When it is felt that removal of supports may result in side collapse or settlement of adjoining ground or endanger adjoining structures and foundations, they shall be left permanently in position. The last 150 mm of excavation shall be done and the bottom trimmed to the required levels only when concreting is imminent. If at any point the natural ground is disturbed or loosened for any reason, it shall be consolidated by tamping or rolling or made up with concrete of M-5 grade, or (1:5:10) cement concrete if so ordered by the Engineer at no extra cost. Where the soil encountered at depths indicated in drawings is loose or weak, it shall be further excavated to levels of firm strata as may be directed by the Engineer and filled with lean concrete of M-5 grade/(1:5:10) cement concrete or sand as directed. If the bottom of excavation has been left exposed not through neglect or fault of the Contractor and it has become deleteriously affected by atmospheric action and water, such portion of deteriorated foundation material shall be removed and made good by lean concrete of grade M-5/(1:5:10) cement concrete or sand as directed.

2.11.1 For deep excavation in the proximity of existing buildings, foundations, streets, railway tracks, underground cabling, gas piping, water and drainage lines, and the like, adequate appropriate precautions shall be taken to protect such structures or works from damage, displacement or settlement, either as an immediate result of the excavation or as after effect, discernible with the passage of time. The method of protection of existing structures and services may include sheet piling, shoring, strutting slinging or any other method including dewatering. Payment for such protective work shall be governed by the description given in the Schedule of Items for the particular work.

2.11.2 For excavation adjoining existing piles care shall be taken to ensure that no pile under any circumstances is exposed from the top for a height exceeding 2 metres. No strutting shall be done against exposed piles, nor exposed piles ever used for tying guy ropes or supports either temporarily or permanently.

© 2022 MECON Limited All rights reserved

2.12 Excess excavation

All excavation done beyond the specified limits or directions of Engineer shall be considered as excess excavation. They shall be made good as prescribed below by the Contractor at his cost:

i) Excess excavation in case of site leveling shall be made good by filling and compacting with material same as the surrounding material. Degree of compaction shall be at least the same as the surrounding material.

ii) Excess excavation in case of trenches shall be made good by filling and compacting with selected earth to the same compaction as the surrounding material or as directed by Engineer. This shall be done in layers not exceeding 150 mm thick, moistened and thoroughly compacted by tamping.

iii) Excess excavation in case of foundation beyond required depths shall be made good by filling with lean concrete of M-5 grade/(1:5:10) cement concrete.

2.13 Disposal of excavated materials

Excavated materials that are unsuitable for use in construction works or in excess of construction requirements shall be disposed off in dumping yards or in locations indicated by Engineer. Waste piles/heaps shall be located in such places where they will not interfere with natural flow of rain water access or transport or with the access to nearby structures. When required, they shall be levelled and trimmed to such lines and levels as indicated by Engineer.

2.14 Back filling of trenches

Trenches shall be backfilled after pipes or service lines are tested and approved. Filling shall be done with earth in 150 mm thick layers free from unwanted material and well rammed. Soft material shall be used in bottom of trenches upto a level of 150 mm above the top of pipes before backfilling with other fill materials. All clods and lumps shall be broken before placement. Care shall be taken not to disturb, break or damage the pipes during backfilling and compaction process.

2.15 Backfilling of foundations

Backfilling of foundations shall be done using suitable soils from excavations. Soil shall be free from organic matter and other materials

© 2022 MECON Limited All rights reserved

which would affect the stability of the fill and shall be free from boulders, brick bats wood pieces and other injurious materials, lumps and clods. Before commencement of backfilling of foundations. all shoring and formwork, bits of timber, cement bags and all other rubbish shall be removed. Hydro-insulation, Bitumen painting or application of anti-corrosive protective and anti-termite treatments shall have been completed. Backfilling operation shall not commence without approval of Engineer. Backfilling shall be carried out in well compacted layers of 150 mm thickness. Each layers shall have near optimum moisture content. Layers will extend to the entire width of excavation and shall be sprinkled with water during compaction process. Ramming shall be done to achieve firm compaction. Backfill shall be trimmed and finished to lines and levels indicated in the drawings and/or as directed by the Engineer. Mechanical equipment like vibratory roller, vibro earth rammer or vibratory compactor shall be used for compaction.

2.16 Filling under floors

Material for filling under floors shall be soil free from harmful minerals, vegetable matter etc., and shall not be expansive soils. Filling shall be done in well compacted layers not exceeding 150 mm in thickness. Each layer shall be compacted to 95% Standard Procter Density. Sufficient soaking shall be done before compaction. The entire area to be covered by flooring shall be finally dressed and trimmed to required levels. Mechanical equipment like vibratory roller, vibro earth rammer or vibratory compactor shall be used for compaction.

2.17 Load bearing fills

Load bearing fills include embankments for roads and railways and such other earth fills above ground levels provided for protection of fuel oil tanks, pads for storage tanks, drain, bunds and the like. Fill materials shall either be selected earth obtained from excavations for site leveling, trenches and foundations or from selected borrow areas as may be required. Soils selected for filling in embankments shall be of uniform quality and free from boulders, organic materials and other objectionable matter. Soils having high silt and clay content and having laboratory maximum dry density less than 1.44 gms per c.c. shall not be used for load bearing fills. For fills greater than 3 m in height soils shall have laboratory density not less than 1.52 gms per c.c. Soils for top 500 mm of fills for roads and railways shall have laboratory density not less than 1.65 gms per c.c. and shall not have marked swelling and shrinkage properties.

Foundation preparation for embankments shall be done as prescribed under site clearance. The founding strata shall be compacted as much as possible by rolling or tamping before placement of fill material. The water content of founding strata should be same as that specified for embankment fill.

© 2022 MECON Limited All rights reserved

Any pockets of loose material or depressions left in founding strata as a result of clearing operation shall be filled and compacted with the same material as the surrounding founding strata. When an embankment is to be placed on steep sloping ground the surface of the ground shall be trenched in steps or trenched or broken up in such a manner that the new materials bonds well with the founding strata.

Fill material shall not be placed until foundation has been inspected and approved by Engineer. Material shall be placed in even, continuous, horizontal layers over full width of embankment in well compacted layers not exceeding 200 mm thickness. Each layer shall be compacted by means of smooth rubber tyred rollers, sheep-foot rollers, tractors, tampers or other mechanical means as may be found suitable for the location. Before rolling, the water content shall be checked and corrected by sprinkling with water or adding dry material or aeration as may be required. This shall be followed by mixing and the layer left for soaking before compaction. The water content shall be within plus or minus 2% of Standard Proctor Optimum. Density of compacted layers shall be determined by sand replacement method. Average compacted density shall be at least 95% of Standard Proctor Density. The number of tests to be conducted for determination of moisture content and density shall be as prescribed by the Engineer. Side slopes of embankments shall be formed along with the main embankment. No side dumping shall be done for the formation of slopes. When required the width of each layer shall be constructed slightly in excess of required width and slopes trimmed to remove loose edge materials and completed to lines shown in drawings or as directed by the Engineer. Subgrades for road works shall be thoroughly wetted sufficiently in advance of placing of any base course and it shall be ensured that it is firm and moist for at least 50 mm below the surface. Should the subgrade for any reason be loose or have density less than required, it shall be recompacted and refinished. Excessive loss of moisture in the subgrade shall be prevented by sprinkling and/or scaling. No traffic or hauling equipment shall be permitted to ply on finished subgrade and any damage caused to such portion shall be made good by the Contractor at his own cost.

2.18 Turfing

The slopes of embankment shall be dressed to line and slightly roughened to bond and hold a surface dressing consisting of 150 mm humus layer of soil. The entire surface shall then be covered with turf consisting of blocks or strips of grass of approved species. The sod shall include a net of roots and earth at least 75 mm thick. The sod shall be laid on slope in close contact and then tamped in place so as to close and fill the joints between blocks.

© 2022 MECON Limited All rights reserved

Immediately after placing the turf, slope shall be thoroughly wetted and kept wet for a sufficient period to assure plant growth. Watering shall be continued until the grass takes root firmly and the whole area presents a uniform appearance. In the event that the plant growth has not taken place within the period of maintenance such areas or patches shall be redone by the Contractor at his own cost.

3.0 ANTI-TERMITE TREATMENT

3.1 Scope

The scope of work includes setting up a chemical barrier against attack by subterranean termites while the building is under construction.

3.2 Execution

3.2.1 General

Unless otherwise specified all work shall in general be executed as specified in IS: 6313 Part-II and as per approved specification of the agency having special know-how for the job.

All necessary work to ensure uniform distribution and proper penetration of treating solution shall be done according to the instruction of the Engineer.

Soil treatment shall not be done when it is raining or when the soil is wet with rain or subsoil water. Once formed, the treated soil barrier shall not be disturbed.

3.2.2 Chemicals and rate of application

Chemical like chlorpyriphos 20% EC (Conforming to IS 8963) in 1% emulsion shall be applied by pressure pumps, uniformly over the area treated. (1 part chemicals + 20 parts water = 1% emulsion).

3.2.2.1 Treatment of pits, trenches & basement excavations

Foundations, basements etc. may either be fully enveloped by the chemical barrier or the treatment may start 500 mm below ground level. The bottom surface and sides of excavation (upto a height of about 300mm) for column pits, walls, trenches and basements shall be treated with emulsion @ 5 liters per sq.m. of surface area. Backfills around columns, walls, etc., shall be treated @ 7.5 liters per sq.m. of the vertical surface. Treatment shall be done in stages following the compaction of earth in layers. The treatment shall be carried out after the ramming operation is done by rodding the earth at 150mm centers closed to the wall surface and spraying the emulsion in the specified dose.

© 2022 MECON Limited All rights reserved

3.2.2.2 Treatment of top surface of plinth filling

Holes 50 mm to 75 mm deep at 150 mm centres both ways shall be made with crow-bars on the surface of compacted plinth fill. Emulsion at the rate of 5 litres per sq.m of surface shall be applied prior to laying soling or subgrade. Special care shall be taken to maintain continuity of the chemical barrier at the junction of vertical and horizontal surfaces.

3.2.2.3 Treatment of doors, windows & soil surrounding pipes, Wastes and conduits.

Special care shall be taken at the points where pipes and conduits enter the building and the soil shall be treated for a distance of 150 mm and a depth of 75 mm at the point where they enter the building. All the wooden door/window frames on the ground floor of the buildings shall be treated with the insecticidal solution.

3.2.2.4 Treatment of expansion joints

These shall receive special attention and shall be treated in a manner approved by the Engineer.

3.3 Acceptance Criteria

The Contractor shall give a 10 year service guarantee in writing supplemented by a separate and unilateral guarantee from the specialised agency for the job to keep the building free of termites for the specified period at no extra cost to the Owner.

4.0 CONCRETE PLAIN & REINFORCED

4.1 Scope

This chapter covers the workmanship, special requirements & regulations with which the contractor must comply to achieve the following two objectives:

(a) The provision, at all locations on the site, of dense workable concrete, having the specified characteristic strength.

(b) The placing of concrete at all elevations, well compacted by vibrations, in well aligned and well fixed formwork ensuring the internal and external dimensions of structures as per drawings and maintaining the size, shape number and locations of reinforcements, inserts etc., as specified in the drawings providing the surface

© 2022 MECON Limited All rights reserved

finish after stripping off the formwork to ensure the structural configurations as per drawings as well within the specified tolerance limits, curing and guaranteeing the characteristic strength, all as specified.

4.1.1 The mixing, placing, compacting, curing and finishing of concrete shall be done according to IS: 456 "Code of Practice for Plain and Reinforced Concrete".

4.2 Materials

For materials, reference to Part - I (Materials) shall be made.

4.3 Grades of Concrete

The grades of concrete unless otherwise specified shall be in accordance with the following table. The grade of concrete to be used in each section of work will be shown in the drawings or in the schedule of items:

Grade off Concrete	Characteristic Strength i.e. Compressive Strength of 15 cm cubes at 28 days (N/mm^2)	Nominal Maximum Aggregate Size (mm)
M-5A	5	63
M-5B	5	40
M-7.5A	7.5	63
M-7.5B	7.5	40
M-10A	10	63
M-10B	10	40
M-10C	10	20
M-10D	10	12
M-15A	15	63
M-15B	15	40
M-15C	15	20
M-15D	15	12

© 2022 MECON Limited All rights reserved

Grade off Concrete	Characteristic Strength i.e. Compressive Strength of 15 cm cubes at 28 days (N/mm^2)	Nominal Maximum Aggregate Size (mm)
M-20A	20	63
M-20B	20	40
M-20C	20	20
M-20D	20	12
M-25C	25	20
M-25D	25	12
M-30C	30	20
M-30D	30	12
M-35C	35	20
M-35D	35	12
M-40C	40	20
M-40D	40	12

Notes: A,B,C,D mentioned along with grade of concrete correspond to the maximum size of coarse aggregate being 63mm, 40mm, 20mm & 12mm respectively.

Unless otherwise specified in the drawings or schedule of items the maximum nominal size of coarse aggregates for different grades of concrete shall be as under:

a)	For concreting in very narrow space or in very small thickness	12 mm
b)	For all reinforced concrete work except in massive foundations	20 mm
c)	For all ordinary plain concrete & massive reinforced foundations	40 mm & 63 mm

© 2022 MECON Limited All rights reserved

4.4 Mix Design

4.4.1 General

At the commencement of the contract the Contractor shall make preliminary tests to determine the proportions by weight of cement, fine aggregates, coarse aggregates and water necessary to produce required grades of concrete. The mix proportions shall be selected to ensure that workability of the fresh concrete is suitable for the conditions of handling and placing and when concrete hardens, it shall have the required strength, durability and surface finish. The Contractor shall get approval of Engineer to such proportions before he starts concreting. However, such approval shall not relieve the Contractor of his responsibility to produce concrete having compressive strengths as laid down in the foregoing Table.

No departure from the approved proportions will be permitted during the works unless and until the Engineer gives written authorisation for any change in proportion. The Engineer shall have authority at any time to check whether the mixing of concrete is being carried out according to the approved proportions.

4.4.2 For the all major and important R.C. works and for all special works, the design of mixes shall be made by the Contractor at his own cost, for each grade of concrete as well as for various workability. The design of mixes shall be made according to I.S. 10262 or any other approved standard methods.

4.4.3 The concrete made by designing the mix is termed hereinafter as "Design Mix Concrete".

4.4.4 The cement content for various grades of concrete shall be based on design mix. However, irrespective of requirement of cement found out from design mix, the minimum cement content & maximum cement content of concrete shall be in accordance with Clause No. 8.2.4.1 & Clause No. 8.2.4.2 of I S 456 respectively.

4.5 Water/Cement Ratio

4.5.1 Where a particular water/cement ratio is stipulated in the design or drawing along with the characteristic grade of concrete the design of mix shall be carried out by adjusting the other variable factors to obtain the characteristic strength of concrete with stipulated water/cement ratio.

4.5.2 In the structures where the impermeability and shrinkage of concrete have an important bearing on the durability and serviceability of the structures, such as water retaining structures, basements, underground premises, tunnels, pump houses, exposed structures near sea side or deserts,

© 2022 MECON Limited All rights reserved

prestressed structure, thin precast members etc. the water cement ratio shall be kept low and preferably not exceeding 0.45.

4.5.3 The water cement ratio, as achieved in the Mix Design, or as specified in the drawings shall be adhered to strictly and shall not be varied without the permission of the Engineer.

4.6 Workability

4.6.1 The workability of fresh concrete shall be such that the concrete is just suitable for the conditions of handling & placing so that after compaction if becomes completely consistent and homogeneously surrounds all the reinforcement and completely fills the formwork.

4.6.2 The workability of fresh concrete at the place of batching/mixing shall be measured by compacting factor test and at the place of disposition by means of slump test. During the finalisation of Trial Mixes, the relationship between compacting factor and slump test shall be established for each grade of concrete as well as for various levels of workability. The workability tests shall be carried out in accordance with IS:1199.

4.6.3 Normally, in the condition of low water cement ratio as well as for medium/high workability, the workability shall be achieved by increasing the cement content, in consistent with added water.

4.6.4 In cases where the cement content is to be limited to reduce the heat of hydration, and the water/cement ratio is also to be kept low to reduce the permeability or due to other requirements the desired workability may be achieved with use of limited doses of plasticiser or air entraining agent. In such cases the method of mixing and dosage of the plasticiser/air entraining agent shall be according to the manufacturer's specification and with the approval of the Engineer.

4.6.5 The usual limits of consistency for various types of structures are given below:

Limits of consistency

Degree of Workability	**Slump in mm with Standard - Cone**		**Use for which concrete is suitable as per IS: 1199**
	Minimum	**Maximum**	
Very low	0.0	25.0	Large mass concrete structure with heavy compaction equipment, roads and the like.

© 2022 MECON Limited All rights reserved

Low	*25.0*	*50.0*	*Uncongested wide and shallow R.C.C structures*
Medium	25.0	75.0	Deep but wide R.C.C structures with congestion of reinforcement and inserts
High	75.0	125.0	Very narrow and deep R.C.C structures with congestion due to reinforcement and inserts

Note: Not withstanding anything mentioned above, the slump to be obtained for work in progress shall be as per direction of the Engineer. With the permission of the Engineer, for any grade of concrete, if the water has to be increased in special cases, cement shall also be increased proportionately to keep the ratio of water to cement same as adopted in trial mix design for each grade of concrete. No extra payment will be made for this additional cement.

4.7 Durability

The durability of concrete, depending on the exposure condition, is to be taken into account while designing the mix. For given aggregates, the cement content should be sufficient to make sufficiently low water cement ratio and Appendix A of IS: 456 shall be taken as guideline for durability considerations.

4.8 Trial Mixes

4.8.1 After approval of the Mix Design by the Engineer, the Contractor shall make in presence of Engineer the Trial Mixes for each grade of concrete as well as for required workability.

4.8.2 Before starting the trial mixes, necessary preparatory works like sieve analysis of the aggregates, determination of densities of different ingredients and moisture contents in the aggregates, shall be completed according to the I.S. Codes 383 and 2386.

4.8.3 Each trial mix shall be handled and compacted by the method which the Contractor proposes to use for that mix in the works and the mixes shall not show tendency of inadequate compaction by the method proposed.

4.8.4 The compacting factor and the slump of each trial mix shall be determined immediately after mixing and the values shall not exceed the maximum value obtained in the mix design.

4.8.5 Six numbers of 150 mm test cubes shall be made from each trial mix. These shall be cured and tested in accordance with relevant I.S. codes. In

© 2022 MECON Limited All rights reserved

order to have the specified characteristic strength in the field, the concrete mix as designed in the Design Mix shall have higher average compressive strength depending on the degree of quality control at site. If the size and special requirement of the work so warrants, the trial may be extended to cover larger ranges of mix proportions as well as other variables such as alternative source of aggregates, maximum size and grading of aggregates and different type and brands of cement.

4.8.6 Before commencement of the concreting works of particular grade of concrete, the Contractor must complete the work of trial mixes and subsequent testing of the test cubes obtained therefrom the design of the Approved Mix for that particular grade of concrete.

4.8.7 The entire cost of all the trial mixes including all the preparatory works for trial mixes, preparation of test cubes and their testing shall be borne by the Contractor.

4.9 Nominal Mix Concrete

4.9.1 Nominal mix concrete may be used for all concrete of Grade M-20 and below. If design mix concrete cannot be used for any reason for Grade M-15 & M-20, nominal mix concrete may be used with the permission of Engineer, Nominal mix concrete shall not be used, in any case for Grade of concrete above M-20.

4.9.2 The proportioning of materials for nominal mix concrete shall be in accordance with Table-9 of clause 9.3 of I.S. 456. The stipulations of Clause 9.3.1 of IS: 456 shall also be taken into consideration.

4.10 Volumetric Mix Concrete

Where concrete is specified in volumetric proportions such as 1:4:8, 1:3:6, 1:2:4, 1:1 1/2:3, 1:1:2 etc., in the schedule of items, coarse and fine aggregates shall be measured by volume and cement by weight. The water cement ratio shall be within 0.45 to 0.70 depending upon the workability.

4.11 Batching of Concrete

4.11.1 Cement

Cement shall always be batched by weight. A separate weighing device shall be provided for weighing cement. Where the weight of cement is determined by accepting the weight per bag, number of bags shall be weighed separately to determine the average net weight of cement per bag and the same shall be checked regularly

4.11.2 Aggregates

© 2022 MECON Limited All rights reserved

4.11.3 For both Design Mix concrete and Nominal Mix concrete, the aggregates (coarse and fine) shall be batched by weight.

4.11.4 In particular cases, or where weigh-batching is not possible proportioning by volume batching may be allowed by the Engineer, provided the Contractor guarantees the uniformity of aggregates through out the period of construction. For this purpose, the Contractor shall submit to the Engineer sufficient data indicating the weight/volume relationship of aggregates for different types of concrete and after such approval, periodic checks on the weight/volume relationship of the aggregates shall be made by the Contractor to the satisfaction of the Engineer. Where aggregates are moist and volume batching is adopted, allowance shall be made for bulking in accordance with I.S. 2386 (Part-III).

4.11.5 Suitable adjustments shall be made for the variation in the weight of aggregates due to variation in their moisture contents.

4.12 Water

4.12.1 Water may be measured either by weight or by volume. When measured by volume, it shall be by well calibrated conical shaped jar or vessel or from a calibrated tank fitted to the mixer.

4.12.2 Adjustment of water due to moisture contents in coarse and fine aggregates

It is very important to maintain the water cement ratio constant at its correct value. For the correct determination of amount of water to be added in the concrete mix, to maintain the water cement ratio constant, the amount of moisture content in both coarse and fine aggregates shall be taken into consideration, be as frequently as possible, the frequency for a given job being determined by the Engineer according to weather conditions.

4.12.3 Determination of moisture content in the aggregates

Determination of moisture content in the aggregates shall be according to I.S. 2386 (Part-III). Where tests are not conducted, the amount of surface water may be estimated from the following table:

Aggregates	**Surface water carried by Aggregates**	
	% by weight	**Lit / m^3**
Very wet sand	7.5	120
Moderately wet sand	5.0	80

© 2022 MECON Limited All rights reserved

Moist sand	2.5	40
Moist gravel & stone chips**	1.25 - 2.5	20-40

** - Coarser the aggregate, less the water it will carry.

4.12.4 Admixtures

Any solid admixture, to be added, shall be measured by weight, but liquid or semi-liquid admixture may be measured by weight or volume.

4.12.5 Accuracy of batching

The accuracy of batching shall be within the following tolerance:

Cement within plus or minus	2%	by weight.
Aggregate within plus or minus	5%	by weight.
Water within plus or minus	0.5%	by weight.

4.13 Mixing & Transportation of concrete

4.13.1 Mixing of Concrete

4.13.1.1 Machine mixing

Concrete shall always be mixed in mechanical mixer. Water shall not, normally, be charged into the drum of the mixer until all other ingredients are already in the drum and mixed for at least one minute. Mixing shall be continued until there is uniform distribution of materials and the mass is uniform in colour and consistency. The mixing time from the time of adding water shall be in accordance with IS: 1791 but in no case less than 2 minutes or at least 40 revolutions.

4.13.1.2 Hand mixing

When hand mixing is permitted by the Engineer it shall be carried out on a water tight platform and care shall be taken to ensure that mixing is continued until the mass is uniform in colour and consistency. In case of hand mixing 10% extra cement shall be added to each batch at no extra cost to the Owner.

4.13.2 Transportation of concrete

4.13.2.1 Concrete shall be transported from the place of mixing to the place of placing concrete as rapidly as practicable by such means which will prevent the segregation or loss of any of the ingredients and maintain the required workability. No water shall be mixed with the concrete after it has left the mixer.

© 2022 MECON Limited All rights reserved

4.13.2.2 Where concrete is transported over long distances, the Contractor shall provide suitable means by which different grades of concrete are readily identifiable at the place of final deposit.

4.13.3 Actions before placement of concrete

4.13.3.1 Programme of works

At the beginning of every fortnight, the contractor shall give his detailed concreting programme for that fortnight to the Engineer. Such programmes, shall specify all information such as the locations where concrete is to be poured, type/grade of concrete, volume of concrete to be poured, number and Type of vibrators proposed to be used as well as proposed to keep as standby, number of skilled technicians and supervisors proposed to be engaged, the proposed time and period of pouring etc.

4.13.3.2 Checking & approval

Before placement of concrete, the contractor shall get all the form works, reinforcements, inserts, conduits, openings, surface preparation etc., checked and approved by the Engineer. To facilitate such checking, the contractor shall complete all his works according to the drawings and specifications well in advance before placement of concrete at least 36 hours for all major/important/complicated works and 24 hours for all minor/ordinary/simple works. The checks are purely in the interest of the work and to draw the contractor's attention to his contractual obligations to execute the works according to the drawings/specification and do not relieve the contractor from his responsibility in getting the end results for the quality & strength of concrete and for maintaining the shape, level & dimensions of the finished concrete, as well as the inserts, openings, other features within the tolerance limits.

4.14 Preparatory Works/Surface Preparation

4.14.1 For concrete directly on earth foundation

4.14.1.1 Earth foundation on which direct placement of concrete is specified, shall be rammed and consolidated as directed by the Engineer such that it does not crumble and get mixed with concrete during or after placement. If the foundation is quite wet, the same shall be kept dry and then sufficiently consolidated, if necessary, a thin top layer of the wet soil shall be removed and replaced by sand or other suitable materials as directed by the Engineer without any extra cost to the Owner. Care shall also be taken that earth from the sides also does not get mixed with the concrete, during or after placement, before it has sufficiently set and hardened.

© 2022 MECON Limited All rights reserved

4.14.1.2 The earth foundation, over which concrete is to be placed direct, shall not be kept abandoned at the specified level and concrete shall be placed immediately following the final preparation of the formation otherwise suitable measures shall be taken, as directed by the Engineer without any extra cost to the Owner.

4.14.2 For construction joints

All such joints shall have continuous square bond grooves to produce a substantial and water-tight key. Where the placement of concrete has to be resumed on a surface which has hardened, it shall be roughened, cleaned by wire or bristle brushing, compressed air, water jet etc., and thoroughly wetted. For vertical construction joints a neat cement slurry shall be applied on the surface immediate before the placement of concrete. For horizontal joints the surface shall be covered with a layer of freshly mixed mortar about 10 to 15 mm thick composed of cement and sand in the same proportion as the cement and sand in the concrete mix and applied immediately before placing of the concrete. On this surface (i.e. on the surface of joints) a layer of concrete not exceeding 150 mm in thickness shall first be placed and shall be well rammed against old work, particular attention being paid to corners and close spots. To ensure water tightness, care shall be taken to punn concrete properly against the old surface.

4.14.3 (a) On vertical surfaces of masonry

When the concrete is placed on the vertical surface of masonry (as in the case of thin concrete fins projected from the vertical masonry surface), a groove of dimension as directed by the Engineer shall be cut in the masonry to ensure a proper bond and the surface shall be cleaned thoroughly. Before the placement of concrete, the surface shall be kept moist by spraying water at least for the period of 2 hours and a thick coat of cement slurry shall be applied immediately before the placement of concrete.

b) Over walls

Building paper over average 12mm thick cement sand bearing plaster of 1:4 mix with neat cement finish shall be provided at the bearings of slabs over walls as directed by the Engineer.

4.14.4 Inside the formwork (cleaning, surface preparation etc.,)

The interior of the form works, where the concrete is to be placed, shall be thoroughly washed by high pressure water jet or air jet to completely clean the entire volume from all sort of dirts, grease/oil, foreign and deleterious materials etc. The reinforcement shall be completely clean and free from all sorts of dirts, grease/oil, rust, foreign/deleterious materials etc., Before placement of concrete, the form works coming in contact with concrete,

© 2022 MECON Limited All rights reserved

shall be coated with form oil or raw linseed oil material or provided with any approved material to prevent adhesion of concrete to the form work, but utmost care shall be taken so that such oily material do not come in contact with the reinforcement.

4.15 Placing and Compaction of Concrete

4.15.1 The concrete shall be placed and compacted before setting commences & should not be subsequently disturbed. No water shall be mixed with the concrete after it has left the mixer. Method of placing should be such as to preclude segregation. Approved mechanical vibrator shall be used for compacting concrete, and concrete shall not be over vibrated or under vibrated.No concrete shall be placed until the place of deposit has been thoroughly inspected and approved by the Engineer. all inserts and embedments properly secured in position and checked and forms properly oiled. No concrete shall be placed in the absence of the Engineer.

4.15.2 Concrete shall be placed on clean bed having the designed level. The bed shall be cleaned of all debris and other objectionable materials. Seepage water, if any, shall be controlled or diverted.

4.15.3 Concreting shall not be carried on during rains unless all precautions have been taken by the Contractor and necessary permission has been given by the Engineer. Suitable measures shall be taken to control the temperature of concrete.

4.15.4 Where plums are permitted in massive concrete, they shall be washed and carefully placed. No stone shall be closer than 30 cm to an exposed face, nor nearer than 15 cm to an adjacent stone.

4.15.5 Concrete shall not be dropped from a height of more than 2m except through a chute, the design and type of which shall be subject to approval of the Engineer.

4.15.6 The concrete shall be placed, spread and compacted by approved mechanical vibrator. Vibrators shall not be used for pushing concrete to adjoining areas.

4.15.7 For members involving vertical placing of concrete (eg. columns, walls etc.,), each lift shall be deposited in horizontal layer extending the full width between shutterings and of such depth that each layer can be easily and effectively vibrated and incorporated with the layer below by means of compaction.

4.15.8 For member involving horizontal placing of concrete (e.g. slabs, beams etc.,) the concrete shall be placed along the line of starting point in such quantities as will allow members to be cast to their full depth along the full

© 2022 MECON Limited All rights reserved

width between side shuttering and then gradually brought towards the finishing point along its entire front parallel to the starting line. Vibration and surface finish shall follow behind the placement as closely as possible.

4.15.9 Utmost care shall be taken to avoid the displacement of reinforcements/embedded parts or movement of formwork or damage to faces of the form work or transmission of any harmful vibration/shocks to the concrete which has not yet hardened sufficiently.

4.15.10 All members shall be concreted at such a rate that no cold joint is formed and fresh concrete is placed always against green concrete which is still plastic and workable.

4.15.11 Should any unforeseen occurrence results in a stoppage of concreting for one hour or such other time as might allow the concrete, already placed, to begin to set before the next batches can be placed, the Contractor shall make at his own cost, suitable tongue, and groove construction joint, as approved by the Engineer. Any additional reinforcement required as directed by the Engineer shall also be provided by the Contractor at his own cost. Before placement of new batches of concrete over that construction joint, the surface preparation according to this specification stipulated earlier, shall be done by the Contractor at his own cost.

4.15.12 The concrete shall be worked well up against whatever surface it adjoins and compacted to such a degree that it reaches its maximum density as a homogeneous mass, free from air and water holes and penetrates to all corners of moulds and shuttering and completely surrounds the reinforcement. All measures shall be taken to make the shape, size, and location of the finished concrete including its embedments, holes, openings etc., well within the accepted tolerance limit.

4.16 Construction Joint & Cold Joints

4.16.1 Construction joints

4.16.1.1 Normally, the construction joints including crank inducing joints shall be constructed as per locations and details indicated on the drawings.

4.16.1.2 Where the location of the joint is not specified in the drawings, it shall be in accordance with the following guide lines:

(a) In Columns

(i) In case of Projection from basement slab, 300 mm from the top of base slab or 75 mm from the top of the haunches whichever is higher.

© 2022 MECON Limited All rights reserved

(ii) In framing of beam at different elevation, 75 mm below the lowest soffit of the beam and in case of projection from beams and slabs 75 mm from the top surface of the beam/slab or at the top surface of beam/Slab whichever facilitates formwork.

(iii) For columns under flat slabs 75 mm below the lowest soffit of the slab.

(b) In walls (horizontal construction joints)

(i)	Walls projecting from base slab	:	300 mm from top of base slab
(ii)	Walls supporting the suspended slab	:	75 mm from the lowest soffit of the slab

Note:

In the case of water retaining structures and structures under the influence of ground water, approved water bars of suitable size shall be provided to make the joint completely water-tight.

(c) In beams

Beams shall be cast, as a rule, without a joint. But if provision of a joint is unavoidable, the joint for simply supported beam shall be vertical and at the middle of the span ; in continuous beam, the same shall be at the point of minimum shear force.

(d) In suspended slabs

(i) In slab of small span, there shall be no construction joints.

(ii) In slabs of large span and continuous slabs, construction joint, if allowed by the Engineer shall be vertical at the middle of span and at the right angles to the principal reinforcement.

(e) In walls (Vertical construction joint)

As a rule, walls shall be cast monolithically without any vertical construction joint, unless specified in the drawing. However, for a long wall, the Engineer may allow vertical

© 2022 MECON Limited All rights reserved

construction joint and the same shall be at the place of minimum shear force. In water retaining structures and in structures under the influence of ground water approved water bars of suitable size shall be provided to make the joints completely water tight.

(f) In slabs resting on ground

(i) For Plain concrete

Concreting shall be done in alternate panels not exceeding 10 sq.m in area. The largest panel dimension shall be 5 m.

(ii) For nominally reinforced slab

The area of pour shall not exceed 40 sq.m and the maximum panel dimension shall not exceed 8m.

(i) For the basement slabs which act as structural member

There shall be no construction joint.

(g) In ribbed beam

The beams shall be cast monolithically with the slab in one continuous operation.

4.16.1.3 In all construction joints the reinforcements shall pass through as per drawings and the same shall not be disturbed in any way.

4.16.1.4 The vertical construction joints shall be provided by insertion of board keeping provision for passage of reinforcement/fixtures / embedments. All construction joints shall be made to form a tongue and groove joint.

4.16.2 Cold joint

An advancing face of a concrete pour, which could not be covered before expiry of initial setting time for unexpected reasons, is called a cold joint. The Contractor shall remain always vigilant to avoid cold joints. If however, a cold joint is formed due to unavoidable reasons, the following procedures shall be adopted for treating it:

(a) If the concrete is so green that it can be removed manually and if vibrators can penetrate the surface without much effort, fresh concrete can be placed directly over the old surface and the fresh

© 2022 MECON Limited All rights reserved

concrete along with the old concrete shall be vibrated systematically and thoroughly.

(b) In case the concrete has hardened a bit more than (a), but can still be easily removed by a light hand pick, the surface shall be raked thoroughly and the loose concrete removed completely without disturbing the rest of the concrete in depth. Then a rich mortar layer of 12 mm thickness, shall be placed on the cold joint and then the fresh concrete shall be placed on the mortar layer and vibrated thoroughly, penetrating deep in to the layer of concrete.

(c) In case the concrete at the joint has become so stiff that it cannot be remoulded and mortar or slurry does not rise in spite of extensive vibration, a tongue and groove joint shall be made by removing some of the older concrete and the joint shall be left to harden at least for 12-24 hours. It will then be treated as regular construction joint and the surface preparation of the same, before placement of concrete, shall be as described in the appropriate clauses of these specifications.

4.17 Requirements for Concreting in Special Cases

4.17.1 Concreting in deep lifts

Placing of concrete in lifts exceeding 2 M in columns and walls is in the category of deep lifts.

4.17.1.1 Before commencement of work, the contractor shall submit for the approval of the Engineer, the details of the methods he proposes to adopt for concreting.

4.17.1.2 The placement of concrete shall preferably be by tremie, chute or any other approved method.

4.17.1.3 In structures of heavy/complicated reinforcement or in complicated form works, the contractor shall provide sufficient number of windows in the form works as directed by the Engineer to check the placement and compaction of concrete in different stages. Such windows shall be closed as soon as the concreting reaches the bottom level of the same.

4.17.2 Concreting under water

When it is necessary to deposit concrete under water, the special requirements, over and above those of this specification shall be in accordance with Clause 14.2 of IS: 456.

4.17.3 Cold weather concreting

© 2022 MECON Limited All rights reserved

When conditions are such that the ambient temperature may be expected to be 4.5 C degree or below during the placing and curing period, the work shall conform to IS: 7861 (Part-II).

4.17.4 Hot weather concreting

When concreting in very hot weather the Contractor shall take all precautions as stipulated in IS: 7861 (Part-I) and stagger the work to cooler parts of the day to ensure that the temperature of wet concrete used, specially in massive structure, does not exceed 38 degree 'C'.

Positive temperature control by methods like pre-cooling, post cooling or cooling of concrete by circulating cold water through small embedded pipe lines inside concrete, if required, shall be specified and shall be undertaken.

4.18 Finishes to Exposed Surfaces of Concrete

The Contractor is to include in his quoted rate for concrete, the provision of normal finishes in both formed & unformed surfaces as and where required by the Engineer without any extra cost to the owner. Some common finishes are indicated below:

4.18.1 Surface which do not require plastering

Surface in contact with casings shall be brought to a fair and even surface by working the concrete smooth against casings with a steel trowel while it is being deposited and also by working over the surface with a trowel immediately after the removal of the casings or centerings, removing any irregularities and stopping air holes, etc. Use of mortar plaster is not permissible for correcting levels, removing unevenness etc. However, if, in the opinion of the Engineer, such plastering is unavoidable then the thickness of plaster shall in no case exceeds 5 mm and the plastering shall be in cement and sand mortar.(1:3).

4.18.2 Exposed surfaces which need plastering

Surfaces of beams/columns flushing with the block work or other structures where intended to plaster, shall be hacked adequately as soon as the shuttering is stripped off so that proper bond with the plaster can develop.

4.18.3 Surface for non-integral finish

Where a non-integral finish such as floor finish is specified or required, the surface of the concrete shall be struck off at the specified levels and finished rough.

© 2022 MECON Limited All rights reserved

4.18.4 For monolithic finish

Where no more finishing course is to be applied as in the case of basement floor, industrial flooring or the screed concrete flooring etc, the concrete shall be completed and struck off at the specified levels and sloped with a screed, board and then floated with a wooden float. Steel troweling is then started after the concrete has hardened enough to prevent the excess of fines and water to rise to the surface but not hard enough to prevent proper finishing. Troweling shall be such that the surface is flat, smooth and neatly finished.

4.19 Curing of Concrete

4.19.1 General

The purpose of curing is to prevent loss of moisture from the concrete itself so that the cement inside the concrete is sufficiently hydrated which of course is slow and prolonged process. As soon as the concrete has hardened sufficiently the curing shall be started. To cure the concrete properly and sufficiently is also the sole responsibility of the contractor.

4.19.2 Different methods of curing

Any one of the following methods may be used for curing as approved by the Engineer.

(a) Curing by direct water.

(b) Curing by covering the concrete with absorbent material and kept damp.

4.19.3 Curing by direct water

This is done either by ponding or spraying water.

(a) Ponding

Ponding is widely used for curing slab and pavements. Earth bunds are formed over the slabs and water is pumped or poured into them and the same is replenished at interval to make up for the loss of evaporation. As this type of curing is one of the best methods, 10 days of curing after final setting is sufficient.

(b) By spraying water

Curing is done by spraying water by suitable means at approved time intervals. While spraying, it shall be ensured that the complete

© 2022 MECON Limited All rights reserved

area is covered. In order to avoid cracking, cold water shall not be applied to massive members immediately after striking the form work, while the concrete is still warm. Alternate wetting and over drying shall be avoided.

Curing by spraying water shall be continued at least for 18 days after final setting.

4.19.4 Curing of concrete with absorbent material kept damp

The entire concrete surface is covered either with hessian, burlap, sawdust, sand, canvas or similar material and kept wet continuously for at least 12 days after final setting.

4.20 Testing of Concrete

4.20.1 General

The Contractor shall carry out, entirely at his own cost, all sampling and testing in accordance with the relevant I.S. standards and as supplemented herein. The Contractor shall get all tests done in approved Laboratory and submit to the Engineer, the test result in triplicate within 3 days after completion of the test.

4.20.2 Consistency test (tests of fresh concrete)

4.20.2.1 At the place of deposition/pouring of the concrete, to control the consistency, slump tests and/or compacting factor tests shall be carried out by the Contractor in accordance with I.S. 1199 as directed by the Engineer.

4.20.2.2 The results of the slump tests/compacting factor tests shall be recorded in a register for reference duly signed by both the Contractor and the Engineer. That register shall be considered as the property of the Owner and shall be kept by the Contractor at site in safe custody.

4.20.2.3 The results of the slump tests/compacting factor tests shall tally, within accepted variation of plus or minus 12% with the results in the respective design mix, in case of mix design concrete and with the values indicated in the table under clause 7.1 of IS: 456 in case of nominal mix concrete.

4.20.2.4 For any particular batch of concrete, if the results do not conform to the requirements as specified in 4.20.2.3 or do not conform to any requirement of this specification, the Engineer has the right to reject that batch and the Contractor shall remove the same immediately from the site, at no cost to the Owner.

4.20.3 Strength test of concrete

© 2022 MECON Limited All rights reserved

4.20.3.1 While placing concrete, the Contractor shall make 6 nos. of 15 cm test cubes from particular batches of concrete as desired by the Engineer. The frequency of taking test cubes shall be either according to clause 15.2 of IS: 456 or as directed by the Engineer.

4.20.3.2 The cubes shall be prepared, cured and tested according to IS: 516. Out of 6 nos. of test cubes 3 shall be tested for compressive strength at 7 days after casting and the remaining 3 at 28 days after casting.

4.20.3.3 A register shall be maintained at site by the Contractor with the following details entered and signed by both the Contractor and the Engineer. That register shall be considered as the property of the Owner.

(a) Reference to the specific structural member

(b) Mark on cubes

(c) The grade of concrete

(d) The mix of concrete

(e) Date and time of casting

(f) Crushing strength at 7 days

(g) Crushing strength at 28 days

(h) Any other information directed by the Engineer.

4.20.4 Acceptance criteria for test cubes

The acceptance criteria of concrete on strength requirement shall be in accordance with the stipulations under clause 16 of IS: 456.

4.20.5 Non-destructive tests on hardened concrete

4.20.5.1 If there is doubt about the strength or quality of a particular work or the test results do not comply with the acceptance criteria as stipulated under clause 15 of IS: 456, non-destructive tests on hardened concrete like core test and/or load tests or other type of non destructive tests like ultrasonic impulse test etc. shall be carried out, as may be directed by the Engineer, by the Contractor at entirely his own cost.

4.20.5.2 The core tests and load tests shall comply with the requirements of clause 17.4 and 17.6 of IS: 456 respectively. In case of other types of special tests

© 2022 MECON Limited All rights reserved

like ultrasonic impulse test etc., the stipulation of clause 17.8 of IS: 456 shall be applicable.

4.20.6 Concrete below specified strength

In case of failure of test cubes to meet the specified requirements the Engineer may take one of the following actions:-

1) Instruct the Contractor to carryout additional test and/or works to ensure the soundness of the structure at Contractor's expense.

2) Reject the work and instruct that section of the works to which the failed cubes relate shall be cut out and replaced at Contractor's expense and the resultant structures affected due to such rejection shall be made good at contractor's expense.

3) Modification/remedial measures if approved by the engineer to be carried out at contractor's expense.

4) Accept the work with reduction in the rate in appropriate item subject to the provisions of clause 16 of IS 456 provided it is technically acceptable. The reduction in the rate shall be as given below:-

   i) When test strength of the sample is above 90% of the characteristic strength, payment shall be made 10% less than the contract rate.

   ii) When test strength of the sample is between 80-90% of the characteristic strength, payment shall be made 25% below than the contract rate.

4.20.7 Concrete failed in non-destruction tests

In case the test results of the core tests or load tests in a particular work do not comply with the requirements of respective clause (17.4 for core test and 17.6 for load tests) of IS: 456 the whole or part of the work concerned shall be dismantled and replaced by the Contractor as may be directed by the Engineer at no extra cost to the Owner and to the satisfaction of the Engineer. No payment for the dismantled concrete including relevant form work, reinforcement, embedded fixtures etc. shall be made. In the course of dismantling if any damage occurs to the adjacent structure or embedded item, the same shall be made good, free of charge by the Contractor, to the satisfaction of the Engineer.

4.21 Steel Reinforcement

© 2022 MECON Limited All rights reserved

4.21.1 Material

Material shall be as specified in the respective schedule of Items. The specifications of materials shall be as per Part-I.

4.21.2 Storage

Steel reinforcement shall be stored in such a manner that they are not in direct contact with ground. Bars of different classifications and sizes shall be stored separately. In cases of long storage or in coastal areas, reinforcement shall be stacked above ground level by at least 15 cm, and a coat of cement wash shall be given to prevent scaling and rusting at no extra cost of the owner.

4.21.3 Bending and placing

Bending and placing of bars shall be in conformity with IS: 2502 "Code of Practice for Bending and Fixing of Bars for Concrete Reinforcement" and IS: 456 "Code of Practice for Plain and Reinforced Concrete".

4.21.4 Welding of Reinforcement

Welding of mild steel reinforcement bars conforming to IS:432 (Part-I) shall be done in accordance with IS: 2751 "Code of Practice for Welding of Mild Steel Bars used for Reinforced Concrete construction" with additional precaution that for lap welded joints the throat thickness of weld beads shall be at least 3 mm or 0.6 times the nominal size of weld (which is the radius of bar) whichever is more.

Welding of cold worked high strength deformed bars conforming to IS: 1786 shall be done using electric arc welding process using low hydrogen electrodes (Ferro Weld- I or Ferro Weld-II or equivalent). Oxy-acetylene welding shall not be used.

Butt welding of bars upto 32 mm diameter for vertical splices shall be done either by single bevel groove weld or double bevel groove weld, with bevel angle 45 degree. Butt welding of bars upto 32 mm diameter for horizontal splices shall be done either by single Vee-groove weld or double Vee-groove weld with chamfered angle of 45 degree to 60 degree. The diameter of welded joint shall be 1.2 times the diameter of bar. Edge preparation for butt welding shall be done by shearing, machining and grinding. Oxy-acetylene flame shall not be used for cutting. Chamfered faces shall be smooth finished by hand file if required.

Lap welding of bars upto 20 mm diameter shall have a minimum bead length of 12 times the diameter of bar or 200 mm whichever is more

© 2022 MECON Limited All rights reserved

arranged on one or both sides. The throat thickness of weld beads shall be 5 mm or 0.75 times the nominal size of weld (which is the radius of bar) whichever is more. In case of unsymmetrical lap weld with weld bead on one side only, the maximum length of each weld bead shall be 6 times the diameter of bar or 100 mm (whichever is more), separated by an equal length in between weld beads. Splice bars used in symmetrical weld joint shall have same diameter as the parent bars. Lap joint with single splice bars shall have weld beads on both sides.

Lap welding of bars above 20 mm shall be done using splice plate or splice angle. Thickness of splice plate shall not be less than 0,65 times the diameter of bar and width shall not be less than twice the diameter of bar. The size of splice angle shall be such that its area of cross section is at least 1.62 times the area of bar being spliced.

More than one third of the bars shall not be welded at any one section and welded joints shall be staggered at a distance of 50 times the diameter of bars. Welding shall not be done at bends or curved parts of bars and it shall be located at least at a distance of 50 times the diameter of bar from bends.

Tests

Test pieces of welded bars shall be selected and tested in accordance with the provisions of IS: 2751. The number of tests will be as laid down in IS: 2751 or such larger number as the Engineer may decide having regard to the circumstances.

4.21.5 Cleaning

All steel for reinforcement shall be free from loose scales, rust coatings, oil, grease, paint or other harmful matters immediately before placing the concrete. To ensure this, reinforcements with rust coatings shall be cleaned thoroughly before bending/placement of the same.

4.21.6 Placing in position

All reinforcements shall be accurately fixed and maintained in positions as shown on the drawings and by adequate means like mild steel chairs and/or concrete spacer blocks as required. Bars intended to be in contact at crossing points, shall be securely tied together at all such points by 20G annealed soft steel wire or by tack welding in case of bars larger than 25 mm dia, as may be directed by the Engineer. Binders shall tightly embrace the bars with which they are intended to be in contact and shall be securely held. The vertical distance between successive layers of bars shall be maintained by provision of mild steel spacer bars. They should be spaced such that the main bars do not sag perceptibly between adjacent spacers.

© 2022 MECON Limited All rights reserved

4.21.7 Clear cover

Clear cover shall be as specified in the drawings. If nothing is specified in the drawing the clear cover shall be in accordance with the relevant clause of IS: 456.

4.21.8 Light structural work and embedded metallic parts, conduits

4.21.8.1 Fabrication of metallic parts & light structural works

Fabrication of all structural steel work shall be done in accordance with IS: 800 "Code of Practice for use of Structural Steel in General Building Construction". Workmanship shall match to the best practice in modern structural shops. Greatest accuracy shall be observed in the manufacture of every part and all identical parts shall be strictly inter-changeable. Steel work shall be shop fitted and shop assembled as far as practicable to minimise site work and to meet transport restrictions. All materials shall be straight and if necessary before being worked shall be straightened of flattened by pressure and shall be free from twists. Shearing or flame cutting may be used and the resulting edges shall be clean and straight. Flame cut edges shall be planed/cleaned by chipping or grinding. Sheared members shall be free from distortion at sheared edges. Welding and welded work shall conform to IS: 816 "Code of Practice for use of metal arc welding for General Construction in Mild Steel". Mild steel electrodes conforming to IS: 814 "Specification for covered electrodes for metal arc welding of mild steel shall be used.

4.21.8.2 Transportation and Storages

All pieces shall be properly identified and bundled for transportation to work site. Care shall be exercised in the delivery, handling and storage of material to ensure that material is not damaged in any manner. Materials shall be kept free of dirt, grease and foreign matter and shall be stored properly on skids or any other suitable supports to avoid contact with ground, damage due to twisting, bending etc.

4.21.8.3 Erection of light structural work

Erection of light structural work shall be carried out in accordance with the provisions of IS: 800. No component which is bend or twisted shall be put in place until the defects are corrected. Components seriously damaged during handling shall be replaced. No riveting, permanent bolting or welding shall be done until proper alignment has been completed. Whenever field welding is to be done it shall be in accordance with the requirements of shop fabrication. Shop paints shall be removed before field welding for a distance of at least 50 mm on either side of the joints.

© 2022 MECON Limited All rights reserved

4.21.8.4.1 Erection of embedded metallic parts, inserts, conduits

Bolts and inserts shall be securely fixed in position as shown in the drawings, before commencement of concreting. Bolts shall be checked for accuracy in alignment on both the axes. Limits of tolerance in alignment and level shall be as shown in the drawing or described elsewhere in these specifications.

Where bolts are housed in sleeves, special care shall be taken after concreting is over and has partly set to ensure that the bolts move within the sleeves. The annular space of the sleeve shall be plugged with suitable stoppers to prevent the ingress of water, grout, dust, rubbish or other foreign material into it, both during and after concreting. Opened conduits shall be plugged similarly. Where channels, Unshapely profiles or other similar inserts are required to be placed in concrete, special care shall be taken to keep the grooves of such profiles free from the ingress of concrete, slurry etc., by suitable packing material, if necessary.

All threads for bolts and inserts shall be greased at intervals and kept covered to prevent damage.

4.21.8.4.2 Necessary templates, jigs, fixtures, supports shall be used as may be specified or required or directed by the Engineer free of cost to the Owner.

Exposed surfaces of embedded materials shall be painted with one coat of anticorrosive paint or bituminous paint, as desired, without any extra cost to the Owner. If welding is to be done subsequently on the exposed surfaces of the embedded parts, the painting for a length of 50mm beyond each side of the weld line shall be cleaned off.

4.22 Shuttering

4.22.1 General

All shuttering, formwork, supports and staging shall be designed by the Contractor and be subject to approval by the Engineer. The Contractor shall submit drawings and calculations to the Engineer for scrutiny when called upon to do so. The shuttering shall be designed for a live load of 400 Kg/m2 in addition to the weight of the green concrete, or such other load as the Engineer may specify. The Contractor shall be responsible for the correctness and strength of the formwork including its supports and centering and approval by the Engineer will not relieve him of his responsibilities.

4.22.2 Material

© 2022 MECON Limited All rights reserved

The staging and supports may be of round or sawn timber or tubular or other shapes in steel. Round timber shall preferably extend over the full height in one piece. These shall be securely jointed or otherwise fastened and spaced at suitable intervals as the design may warrant and shall be suitably braced at regular intervals horizontally and diagonally.

The form work shall be of steel plate on steel frame, wooden boards with steel sheet lining, or plywood or seasoned timber board. Where ornamental and curved surfaces are required the material shall be very good seasoned timber or plywood which can be shaped correctly.

4.22.3 Fixing

The shuttering shall conform to the shapes, lines, levels and dimensions shown in the drawing. It shall be fixed in perfect alignment and securely braced so as to be able to withstand, without appreciable displacement, deflection or movement of any kind, the weight of all construction, movement of persons and plant. It shall be so constructed as to remain rigid during the placing and compacting of concrete without shifting or yielding and shall be sufficiently water tight to prevent loss of slurry from the concrete.

All props shall be supported on sole plates and double wedges. At the time of removing props these wedges shall be gently eased and not knocked out. The form work shall be so designed that the sides are independent of the soffits and the side forms can be removed easily without any damage or shock to the concrete.

4.22.4 Wrought shuttering

Wrought shuttering shall be such as to produce a first class fair face on the concrete free from board marks or any other disfigurements. This shall be used for exposed surfaces where specified or directed by the Engineer. It may be made of heavy quality plywood or steel sheets having smooth, plain surface.

The joints in shuttering shall be arranged in a regular pattern approved by the Engineer. Wrought shuttering shall be aligned within a tolerance of 3 mm.

4.22.5 Rough shuttering

Rough shuttering shall be used for all surface of concrete walls, footings etc., which are not exposed in the finished work or which are to receive plaster and as directed by the Engineer. It may be made of timber, ordinary plywood or steel sheets.

© 2022 MECON Limited All rights reserved

4.22.6 Special provision

4.22.6.1 Wherever concreting of narrow member is required to be carried out within shutters of considerable depth, temporary openings in the sides of the shutters shall, if so directed by the Engineer, be provided to facilitate cleaning, pouring and consolidation of concrete.

4.22.6.2 In liquid retaining structures and structures below ground water level, through bolts for the purpose of securing and aligning the form work shall not be used.

4.22.6.3 Forms shall be given an upward camber, if so desired by the Engineer, to ensure that long beams do not have any sag. The camber may be 1 in 250 or as the Engineer may direct.

4.22.6.4 The joints in form work shall be sealed by adhesive tapes or by other means, to prevent any leakage of slurry or mortar if so directed by the engineer.

4.22.7 Preparation for concreting

Before any concreting is commenced the shuttering shall be carefully examined for dimensional accuracy and safety of construction. The space to be occupied by concrete shall be thoroughly cleaned out to remove rubbish, debris, shavings and saw dust. The surface in contact with concrete shall be coated with an approved substance such as mould oil or other non-staining mineral oil to prevent adhesion. Where necessary the surface shall be wetted to prevent absorption of moisture from concrete. Care shall be taken to avoid the reinforcements coming in contact with shutter oil.

4.22.8 Removing

4.22.8.1 Removal of forms shall never be started until the concrete has thoroughly set and aged to attain sufficient strength to carry twice its own weight plus the live load that is likely to come over it during construction

4.22.8.2 Removal of forms shall not entail chipping or disfiguring of the concrete surface. Shuttering shall be removed without shock or vibration and shall be eased off carefully in order to allow the structure to take up its load gradually.

4.22.8.3 Under normal circumstances (generally where temperatures are above 21 degree 'C'), and where ordinary portland cement is used shuttering may be struck after the expiry of the following periods:-

© 2022 MECON Limited All rights reserved

	Walls, columns & vertical faces	24 to 48 hours as may be directed by the Engineer.
ii)	Bottom of slab upto 4.5 m span	7 days
iii)	Bottom of slab above 4.5 m span, bottom of beam and arch, rise upto 6 m span	14 days
iv)	Bottom of beam and arch rise over 6 m span	21 days

These periods may be increased at the discretion of the Engineer. Special care shall be taken while striking the shuttering of cantilevered slabs and beams, portal frames etc.,

4.22.8.4 Before removing the form work, the Contractor must notify the Engineer to enable him to inspect the condition of the finished concrete immediately after the removal of the form works.

4.22.9 Contractor's responsibility

Any damage resulting from faulty preparation, premature or careless removal of shuttering shall be made good by the Contractor at his own expense.

4.22.10 Irrecoverable shuttering

In cases where the shuttering cannot be removed without damaging the structure itself or where removal of shuttering is rendered impossible due to the nature of construction or where the Engineer may so instruct, such shuttering shall be classified as irrecoverable shuttering. However, such abandoning of shuttering will be permitted only in situations where it will not remain exposed or otherwise cause damage of any kind.

4.22.11 Metal Forms

Where permanently left-in-place metal forms or deck are shown in drawings or otherwise ordered to be provided by the Engineer, they shall satisfy the requirements with regard to load carrying capacity. The metal forms shall be obtained from a reputed manufacturer, whose performance guarantee shall be obtained and submitted to the Engineer. Designs and drawings giving full details shall be submitted to the Engineer in advance for approval.

4.23 Damp Proof Course Concrete

© 2022 MECON Limited All rights reserved

4.23.1 Thickness

It shall be as specified in the drawings or in the items.

4.23.2 Mix

The grade of mix shall be as specified in the drawing or schedule of quantities. If nothing is specified, the mix shall be 1 part of cement: 1 1/2 part of coarse sand: 3 parts of stone chips. The stone chips shall be 12 mm down graded.

Approved water proofing admixture shall be mixed with cement as per manufacturer's specifications. The water cement ratio shall be as low as possible to increase the impermeability of concrete and in no case more than 0.5.

4.23.3 Preparation of base surface

The base surface shall be well roughened by chipping and brushing with steel brush and shall be cleaned of all dirt, dust, grease, oil and all other foreign & deleterious materials. Then the surface shall be well moistened with water.

4.23.4 Placing and compaction

Just prior to placement of D.P.C. Concrete, a thick coat of cement slurry shall be applied on the base surface. The placement shall be as specified for the concrete in beams. The concrete shall be well compacted to make it dense.

4.23.5 Finishing

When the concrete has set enough but remains still green, the top surface shall be marked in regular pattern by steel trowel so as to have proper bond with the future work.

4.23.6 Curing

The D.P. course shall be kept continuously moist at least 10 days.

4.24 Grout

4.24.1 Scope

The scope covers the grouting under base plates, grouting between the joints of precast concrete, grouting the pockets/holes/opening etc.

© 2022 MECON Limited All rights reserved

4.24.2 Grouting under base plates

Unless otherwise specified in drawing, grouting under base plates of equipments / technological structures shall be with ready-mix flow able non-shrink type as per recommendation of equipment supplier. The grout shall be placed in position well rammed until the whole space is completely filled with grout. No vibrators shall be used.

Grouting below base plates of structural members and in pockets of shear key below base plate, the mix of the grout shall be with concrete using 12mm down aggregates. Normally the grade of such concrete/mortar shall be one grade higher than the grade of structural concrete (minimum M-30) unless specified otherwise. Expanding admixture of approved type shall be used as per manufacturer's specification in such grout.

4.24.4 Workmanship

4.24.4.1 The surface of the concrete over which grouting is to be applied shall be thoroughly prepared to provide a clean rough surface. If necessary, chipping shall be carried out on such surface to make it completely rough. Then the surface shall be wetted. Bolt pockets shall be cleaned immediately before the base plate is placed in position. Before grouting the surface shall be thoroughly cleaned with compressed air/water jet.

4.24.4.2 Before placement of grout, the surfaces (except in the case of bolt holes) shall be wetted with cement slurry. In case of bolt holes/pockets water from such pockets shall be thoroughly removed by some suitable means and no cement slurry shall be applied.

4.24.4.3 Hand mixing is not permitted and the grout shall always be machine mixed. If however in some special cases where the quantity of grout is so small that it cannot be machine mixed, hand mixing may be allowed but the same shall be done under the strict supervision of an experienced supervisor of the Contractor.

4.24.4.4 The grout shall be placed within 30 minutes of being mixed. The grout shall be poured and then worked into position by suitable means until the space is completely filled. The Contractor shall take all possible measures during grouting so that the grout fills the space completely and thoroughly. Where the gap is very small or unapproachable for the placement of concrete, the Contractor shall grout by pressure grouting and in that case the mix may be of cement sand mortar of the appropriate grade but in any case the water cement ratio shall be as low as possible. Neither "Dry" grout (having slump 6mm or less) nor expanding wet grout shall be grouted with any type of vibrating machine

© 2022 MECON Limited All rights reserved

4.24.5 Curing

After 10 hours of grouting, the same shall be covered with wet gunny bags and the surface shall be kept continuously moist at least for 10 days.

4.25 Concreting in Water Retaining Structures

General requirements

The basic specifications as regards 'mix' design, placing, compacting, curing etc. shall conform to the requirements as specified herein before in this Chapter. Over and above the materials and workmanship shall conform to the stipulations of IS: 3370 (Part-I & II) to make dense and impervious concrete. As specified herein before all the construction joints shall be provided with approved water bars. The expansion and construction joints, if any, shall be provided with the requirements as specified in the drawing or as directed by the Engineer.

4.26 Application of Live Load

The designated live load shall be allowed on any structure only after 28 days, after proper curing is carried out on the last concrete poured in structure.

4.27 Foam Concrete

This shall be of average 50mm thickness or as specified or as shown on the drawings. This may be laid in in-situ in suitable panels or in precast blocks. The insulating properties shall be such that the thermal conductivity shall not exceed 0.125 Kcl m/m2h/degree C. The weight of the insulating material shall be from 0.5 to 0.75 gm/cm3, strength not less than 5 Kg/sq.cm or (0.5N/sq.mm.). In general, the main ingredients of Foam Concretes are cement, fly ash and foaming agent and the work shall be carried on by specialised Agencies/Companies. Before starting the laying of foam concrete sample shall be prepared at site and got tested for approval of the Engineer.

The foam concrete laid shall be sufficiently strong to take the usual work loads and standard loads expected on the roof. Any damaged portion shall be removed and replaced forthwith. Approval of the Engineer shall be taken before laying the waterproofing over the insulation.

While laying the foam concrete, sample batches of mix shall be kept for test if so desired by the Engineer.

5.0 MASONRY

© 2022 MECON Limited All rights reserved

5.1 General

This specification deals with masonry and allied works in foundation,

plinth and superstructure.

5.2 Materials

For specifications of materials Part-I shall be referred.

5.3 Selection of Mortars

Mortar for masonry shall conform generally to IS: 2250 "Code of Practice for Preparation and Use of Masonry Mortars", and proportion shall be as specified in the drawing or in the Schedule of Items.

5.4 Cement Mortar

5.4.1 Cement mortar shall be prepared by mixing cement and sand in specified proportion. It is convenient to take unit of measurement for cement as a bag of cement weighing 50 Kg equivalent to 0.035 cubic metre. Sand is measured in boxes of suitable size (say of 40 x 35 x 25 cm). It shall be measured on the basis of dry volume. In case of damp sand, the quantity shall be increased suitably to allow for bulkage in accordance with IS:2386 (part-III) or by any approved method.

5.4.2 The mixing of the mortar shall be done preferably in a mechanical mixer. This condition may be relaxed by the engineer taking into account the nature, magnitude and location of the work.

If mixed in the mixer, cement and sand in the specified proportion shall be fed in the mixer and mixed dry thoroughly, water shall be then added gradually and wet mixing continued for at least 3 minutes. In case of hand mixing also after mixing dry on a water-tight masonary platform, water shall be added and the mortar turned over and over, backward and forward several times.

5.4.3 Fresh mixed mortar, in case becoming stiff due to evaporation of water may be retempered by adding water as frequently as needed to restore the requirement of the consistency but this shall be permitted only upto a maximum of 2 hours from the time of addition of cement in the mortar.

5.5 Brick Work

5.5.1 Storage and handling bricks

© 2022 MECON Limited All rights reserved

Bricks shall not be dumped at site. They shall be carefully handled and carefully stacked in regular tiers to avoid breakage and defacement of bricks and prevent contamination by mud or other materials. The supply of bricks shall be so arranged that as far as possible at least two days' requirement of bricks is available at site at any time. Bricks selected for different situations of work shall be stacked separately.

5.5.2 Soaking & Cleaning bricks

Bricks required for masonry shall be cleaned to be free from dirt, dust and sand and fully soaked in clean water by submerging in vats before use, till air bubbling ceases. The bricks shall not be too wet at the time of use. After soaking they shall be removed from the tank sufficiently early so that at the time of laying they are skin dry and stacked on a clean space.

5.5.3 Setting out

The building lines shall be set out by the Contractor as per clause 7 of IS: 2212 and got checked by the Engineer.

5.5.4 Laying of bricks

5.5.4.1 Brickwork in general shall be as per IS 2212. Bricks shall be laid in English bond, unless otherwise specified, with frogs upward over a full bed of evenly laid mortar, and slightly pressed and tapped into final position to the lines levels and shape as shown in the drawing fully embedded in mortar. All joints including inside faces shall be flushed and packed. Not more than 8 courses shall generally be laid in a day. The first course itself shall be made horizontal by providing enough mortar in the bed joint to fill up any undulations. The horizontality of courses and the verticality of wall shall be checked very often with spirit level and plumb bob respectively.

5.5.4.2 Horizontal joints shall be truly horizontal and vertical joints shall line up in every alternate course. The joints shall not exceed 10 mm in thickness and shall be well finished and neatly struck. The joints shall be kept uniform throughout the brick work. All the brick joints of the face works shall be neatly raked out to a minimum depth of 15 mm with the help of raking tools and the faces of brick wall cleaned with wire brush to remove any splashes of mortar before the close of the day's work, while the mortar is still green and the last brick layer shall be cleaned with wire brush and the frogs free from mortar.

5.5.4.3 Walls coming in contact with R.C.C. structures shall perfectly be bonded with M.S. inserts or lugs where shown on drawings and the sides butting against the R.C.C structures neatly and efficiently flashed and packed with rich mortar & cement slurry at no extra cost (cost of M.S. inserts or lugs used shall be measured and paid separately under relevant items). Where

© 2022 MECON Limited All rights reserved

such lugs are not required to be provided, brick work shall be built tightly against columns, slabs or other structural parts, around door and window frames with proper distance to permit caulked joint. Where drawings indicate structural steel column or beam to be partly or wholly covered with brick work, bricks shall be built closely against all flanges and webs, with all spaces between steel and brick work filled solid with mortar not less than 10 mm thick.

5.5.4.4 Damaged or broken brick or brick bats shall not be used in brick work. Cut bricks may be used to complete bond or as closers or around irregular openings.

5.5.4.5 Bricks shall not be thrown from heights to the ground, but shall be handled carefully and put gently in position to avoid damaging their edges.

5.5.4.6 Selected bricks of regular shape and dimension shall be used for face work.

5.5.4.7 Making of grooves, sleeves and chases shall be done, during the construction, to the lines, levels and position as shown in the drawing or as instructed by the Engineer. Such sleeves shall slope outward in external walls so that their surface cannot form channels for the easy passage of water inside.

5.5.4.8 Fixtures, plugs, frames,pipes, inserts etc., if any, shall be built in at the right places to the lines & levels as shown in the drawings while laying the course and not later by disturbing the brick work already laid.

5.5.4.9 Brick walls of one brick thick or less shall have one selected face in true plane and walls more than one brick thick shall have both the faces of wall in true plane.

5.5.4.10 All connected brick work shall be carried out simultaneously with uniform heights throughout the work, and in exceptional cases, with the approval of the Engineer, the brick work built in any part of the work may be lower than another adjoining wall/connected wall by a maximum of one metre and the difference in height of adjoining wall/connecting wall shall be raked back according to bond by stepping at an angle not steeper than 45 degree, without sacrificing the necessary bond, horizontality of layers, verticality of joints and the wall. Toothing shall not be allowed in brick work, for raking back. The top layer just below the R.C.C slab or beam shall be laid with frogs down over a layer of mortar on full width.

5.5.4.11 Openings in brick work

Openings shall be made in brick work, which may be of any shape, size, at all levels, heights or depths, including round openings, as shown in the drawing or as directed by the Engineer, maintaining the necessary bond

© 2022 MECON Limited All rights reserved

using a minimum of cut bricks. Openings in external face walls, the sills, jambs, soffits of opening may be rebated and the sill shall be sloped slightly for drainage of rain water.

5.5.4.12 All exposed brick work shall be rubbed down, thoroughly washed, cleaned and pointed as specified. Where face bricks of specific quality are used the same shall be rubbed with carborundum stone.

5.5.5 Half-brick masonry

5.5.5.1 Half-brick work shall be done in the same manner as for brick work except that all courses shall be laid in stretchers. Both faces shall be true to plane and the joints raked on both faces.

Where reinforcement is considered necessary or specified and shown in drawing, M.S. bars or hoop iron shall be provided as stipulated in the Schedule of Items or as directed by the engineer. The reinforcement shall be cleaned of rust and loose scale with a wire brush, and shall be laid straight on the mortar and lapped with the dowel bars provided in the column, securely anchoring them at their ends where the half-brick wall butts. The batching of mortar usually shall be in the proportion of 1:4 or as stipulated in the Schedule of Items. Half of the mortar for the joints shall first be laid and the other half laid after the reinforcement is laid in position, so that the reinforcement is fully embedded in position.

5.5.6 Brick on edge masonry

The work brick on edge masonry wall in superstructure shall be done in the same manner as mentioned for brick work except that it shall always be reinforced with wire mesh netting of approved variety as specified in the item and embedded in cement mortar at interval as specified in the Schedule of Items. The wire netting shall be continuously laid and securely anchored with the dowel bars provided & projecting from the walls/RCC structure or steel structures at their ends where brick on edge wall butts. The batching of mortar usually shall be in the proportion of 1:3 or as stipulated in the Schedule of Items.

5.5.7 Protection of brick work

The brick wall shall be protected and covered with gunny bags or

water proof sheets from the effects of inclement weather, rain, frost, etc., during the construction and until the mortar sets. Care shall be taken during construction that the edges of jambs, sills and soffits of openings are not damaged.

5.5.8 Curing

© 2022 MECON Limited All rights reserved

All brick works shall be kept moist for 10 days after laying.

5.5.9 Scaffolding

5.5.9.1 Necessary and suitable scaffolding shall be provided at all heights to facilitate the construction of brick wall. Scaffolding shall be sound, strong and all supports and other members shall be sufficiently strong and rigid, stiffened with necessary bracings and shall be firmly connected to the walls securing them against swing or sway. Planks shall be laid over the scaffolding at required levels. Scaffolding shall preferably be of tubular steel, although the Engineer may permit other material, depending upon the circumstances.

5.5.9.2 Scaffolding shall be double, having two sets of vertical supports, particularly for the face wall and all exposed brick work. Single scaffolding may be used for buildings upto two storeys high or at other locations, if permitted by the Engineer. In such case the inner ends of horizontal members shall rest in holes provided in header course only. Such holes shall not be allowed in pillars under one metre in width, or immediately near the skew backs or arches. The holes thus left in masonry shall be filled with bricks set in rich mortar and the surface made good on removal of scaffolding.

5.5.9.3 If for any reason the Contractor is required to erect scaffolding in property other than that belonging to the Owner, including municipal corporation or local bodies, necessary permission shall be obtained by the Contractor from the appropriate authorities and necessary licensing fees if any shall have to be borne by him.

5.5.9.4 All scaffoldings once erected shall be allowed to remain in position, efficiently maintained by the Contractor, till all the finishing works required to be done are completed and shall not be removed without the approval of the Engineer.

The Contractor shall allow workmen of other trades to make reasonable use of the scaffolding without any extra cost.

5.6 Stone masonry

5.6.1 General

All aspects of the work shall be in conformity with the "Code of Practice for Construction of Stone Masonry, IS: 1597 (Part-I & II). Relevant clauses

© 2022 MECON Limited All rights reserved

under brick work, such as setting out, making chases, openings, fixing frames and plugs, protection, curing, scaffolding etc., shall apply to stone masonry and concrete block masonary.

5.6.2 Mortar

The mortar used shall be as specified in the Schedule of Items or drawing.

5.6.3 Holes and Plugs

Holes in stone walls shall be left for water supply, plumbing, sanitation, electrification, etc., where shown on drawings or ordered by the Engineer as the work proceeds. These holes shall, on completion, be made good to match with the adjoining wall. The Contractor shall provide and fix wooden plugs, water supply piping and electric conduit pipes etc. where so specified.

5.6.4 Random rubble masonry

5.6.4.1 Laying

All stones shall be wetted and cleaned of all dust and loose materials before laying. Stones shall be laid on their natural beds, fitted carefully to the adjacent stones to form neat and close joints fully packed with mortar and chips and spalls of stone may also be used wherever necessary to avoid thick mortar bed or joints. Walls shall be carried to plumb or to the specified batter. Stones may be brought to level course at plinth, window sills and roof levels and the leveling shall be done with concrete comprising of 1 part of the mortar as used for the masonry and 2 parts of 20 mm down graded hard stone chips at no extra cost. Bond shall be provided by fitting in closely the adjacent stones and by using bond stones running through the thickness of wall in a line from the face to back with at least one bond stone, or a set of bond stones, for every 0.5 sq.m. of the wall surface. Face stones shall extend and bond well into the backing. These shall be arranged to break joints as much as possible, and to avoid long vertical lines of joints.

5.6.4.2 Quoins

Quoins shall be of selected stones, neatly dressed with hammer or chisel to form the required angle and laid header and stretcher alternately. No quoin stone shall be smaller than 0.025cum (25dcum in volume and it shall also not be less than 300mm in length, 25% of them being not less than 500mm in length).

5.6.4.3 Joints

© 2022 MECON Limited All rights reserved

The stones shall be so laid that the joints are fully packed with mortar and chips and face joints shall not be more than 20 mm thick. When plastering or pointing is not required to be done, the joints shall be struck flush and finished at the time of laying, otherwise the joints shall be raked to a minimum depth of 20 mm by raking tool during the progress of work, when the mortar is still green.

5.6.5 Coursed rubble masonry - First sort

5.6.5.1 Laying

All stones shall be wetted before use. The walls shall be carried up truly plumb or to specified batter. All courses shall be laid truly horizontal and all vertical joints shall be truly vertical. The height of each course shall not be less than 15 cm nor more than 30 cm.

Face stones shall be laid alternate headers and stretchers. No pinning shall be allowed on the face. No face stone shall be less in breadth than its height and at least one third of the stones shall tail into the work for length not less than twice their height.

The hearting or the interior filling of the wall shall consist of stones carefully laid on their proper beds in mortar, chips and spalls of stone being used where necessary to avoid thick beds of joints of mortar and at the same time ensuring that no hollow spaces are left anywhere in the masonry. The chips shall not be used below the hearting stone to bring these upto the level of face stones. The use of chips shall be restricted to the filling of interstices between the adjacent stones in hearting and these shall not exceed 10% of the quantity of stone masonry. The masonry in a structure shall be carried up regularly but where breaks are unavoidable, the joints shall be raked back at an angle not steeper than 45 degree. Toothing shall not be allowed.

5.6.5.2 Bond Stones

Bond stone or a set of bond stones shall be inserted 1.5 to 1.8 metres apart, in every course.

5.6.5.3 Quoins

The quoins, shall be of the same height as the course in which these occur. These shall be at least 45 cm long and shall be laid stretchers and headers alternately. These shall be laid square on the beds, which shall be rough-chisel dressed to a depth of at least 10 cm. In case of exposed work, these stones shall have a minimum of 2.5 cm wide chisel drafts at four edges, all the edges being in the same plane.

© 2022 MECON Limited All rights reserved

5.6.5.4 Joints

All bed joints shall be horizontal and all side joints vertical. All joints shall be fully packed with mortar, face joints shall not be more than one cm thick.

When plastering or pointing is not required to be done, the joints shall be struck flush and finished at the time of laying. Otherwise, the joints shall be raked to a minimum depth of 20 mm by raking tool during the progress of work, when the mortar is still green.

5.6.6 Coursed rubble masonry - Second sort

5.6.6.1 Laying

Shall be as specified in 5.6.5.1 except that the use of chips shall not exceed 15% of the quantity of stone masonry, and stone in each course need not be of the same height but more than two stones shall not be used in the height of a course.

5.6.6.2 Bond stone, quoins

Shall be as specified for first sort respectively.

5.6.6.3 Joints

All bed joints shall be horizontal and all side joints vertical. All joints shall be fully packed with mortar, face joints shall not be more than 2 cm thick.

When plastering or pointing is not required to be done, the joints shall be struck flush and finished at the time of laying. Otherwise, the joints shall be raked to a minimum depth of 20 mm by raking tool during the progress of work, when the mortar is still green.

5.7 Hollow concrete block masonry

5.7.1 Construction of hollow concrete masonry shall be done in accordance with procedures laid down in IS: 2572. General procedures for construction shall conform to IS: 2212 except for the following:

5.7.2 Storage, handling and preparation

The blocks shall be stored in stable stacks over planks or other supports with sufficient care taken to prevent ingress or moisture.

© 2022 MECON Limited All rights reserved

Blocks shall be handled carefully to avoid cracking. All damaged units shall be rejected and removed from site.

Blocks need not be wetted before or during placement. Unless the climatic condition so require, the top and sides may be slightly wetted.

5.7.3 Mortars

Mortar for use in hollow concrete block masonry shall be made from cement, slaked lime and sand unless otherwise specified. The mix preparation shall be as recommended in Table-I of IS: 2572. Preparation of mortar shall be in accordance with IS: 2250.

5.7.4 Laying

Laying of block for first and subsequent courses and requirements of horizontal and vertical joints shall be as described in IS: 2572. Use of hollow blocks in foundations shall be avoided. Use of blocks filled with sand and blocks filled with 1:3:6 concrete for foundation courses, plinths and basements shall be done with approval of Engineer. Closure blocks of superstructure shall have all openings battered with mortar. A course of solid concrete block masonry shall be provided under door and window openings or a 10 cm thick precast concrete sill block shall be provided under windows. This course shall extend at least 20 cm beyond the openings on either side. Solid blocks or hollow blocks filled with 1:3:6 concrete shall be used for jambs or fixing of hold fasts etc., Similarly solid blocks or U-shaped blocks filled with 1:3:6 concrete shall be used for roof course. They shall be finished smooth at top with 1:3 cement mortar and covered with a coat of crude oil, craft paper or oil paper for free roof movement.

5.7.5 Bond

Wherever two walls intersect, bond between at least 50% of the units intersecting shall be provided. If intersecting walls are laid separately pockets shall be left in the first wall at a maximum vertical spacing of 20 cm for the corresponding course of second wall to be built into these pockets.

Pilasters shall be of twice the thickness. Hollow blocks shall not be used for isolated piers unless they are filled with 1:3:6 concrete.

6.0 PLASTERING AND POINTING

6.1 Materials

© 2022 MECON Limited All rights reserved

The specification of materials shall conform to the requirements as specified in Part-I.

6.2 Plastering

6.2.1 General

Plastering shall be done in accordance with provisions of IS: 1661. Mix proportions of mortar for plastering and thickness of plaster shall be as given either in the drawing, or as per Schedule of Items or as directed by the Engineer. For special plaster work, necessary admixtures shall be added to mortar in required proportion as per manufacturer's specifications or as specified herein. The thickness mentioned in the Schedule of Items shall be minimum thickness.

6.2.2 Preparation of surface

The surface to be plastered shall be cleaned of all extraneous matter and rubbish. In masonry the joints shall be raked to a minimum depth of 12 mm and cleaned with wire brush. Concrete surfaces to be plastered shall be roughened and hacked to form key for plastering. All plastered surfaces shall be finished smooth with a wooden float in one plane and all internal angles shall be finished slightly rounded. If desired by the Engineer, any unevenness shall be rubbed down by carborundum stones. The surface to be plastered shall be wetted evenly before the application of plastering. Trimming of projections on brick/concrete surfaces wherever necessary shall be done.

For one coat plastering the plaster shall be laid slightly thicker than the specified thickness and the surface then leveled with flat wooden float to the required thickness. For two coat plaster work, the first coat (usually half of total thickness) shall be applied as detailed above except that the surface shall be left rough and keys formed for the application of second coat. The second coat shall be laid on with a wooden float to the specified thickness and shall be applied a day or two after the first coat has set, but has not dried up.

Cement mortar for plastering work shall be used within 30 minutes after adding water to cement and should be kept agitated at intervals of 20 minutes.

If specified cement punning shall be done over the plastered surface by sprinkling neat cement powder evenly on the surface and rubbed smoothly with a trowel to give a fine coating. The plaster shall be kept wet for at least seven days and protected from extreme temperature and weather during this period

© 2022 MECON Limited All rights reserved

The arises of doors and windows shall have richer mortar 1:3 in a width of 75 mm on either side or as required at respective location.

6.2.3 Concrete beams, slabs, columns etc. framing into masonry are to be plastered along with masonry walls with these edges wrapped with chicken wire mesh of gauge 24. Overlapping of mesh shall be minimum 75 mm on either side of the edge of the concrete element. Minimum lap for chicken wire mesh shall be 50 mm.

6.3 Cement Pointing

6.3.1 Where shown on drawing, Schedule of Items, or as directed by the Engineer, exposed brick faces shall be cement rule pointed. The mortar shall be raked out of the joints to a depth of 12 mm. The dust shall be brushed out of the joints and the wall well wetted.

Unless otherwise specified the pointing shall be made with cement and sand mixed in proportion 1:3. The joints of the pointed work shall be neatly finished truly vertical and horizontal or as directed and the lines shall be kept wet till the cementing material has set and become hard. If required, the whole brick face shall be rubbed and polished with fine grade of carborundum stones. Particular care shall be taken to see that no brick face or brick edge is damaged during this work.

6.3.2 Flush pointing

The mortar shall be pressed into the joints and shall be finished flush and levelled. The edges shall be neatly trimmed with trowel and straight edges.

6.3.3 Ruled pointing

The joint shall be initially formed as for flush pointing and then, while mortar is still green, a groove of required shape and size shall be formed by running a forming tool straight along the centre line of the joint till a smooth and hard surface is obtained. The vertical joints shall also be finished in similar way. The pointing line shall be uniform in width and truly horizontal in case of floors and ceilings.

6.3.4 Cut or weather struck pointing

The mortar shall first be pressed into joints. The top of the horizontal joints shall then be neatly pressed back by about 3mm with the pointing tool so that the joint is sloping from top to bottom. The vertical joint shall be ruled pointed. The junctions of vertical joints with the horizontal joints shall be at true right angles.

6.3.5 Raised and cut pointing

© 2022 MECON Limited All rights reserved

This type of pointing shall project from the wall facing with its edges cut parallel so as to have a uniformly raised band about 6mm raised and width 10mm or more as directed. The pointing shall be finished to a smooth but hard surface. the superfluous mortar then shall be cut off from the edges of the lines and the surface of the masonry shall also be cleaned off all the mortar.

Curing

The pointing shall be kept wet for 7 days. During this period it shall be suitably protected from all damages.

6.3.6 Pointing on brick flooring

Specification for this shall be conforming to under sub head "Pointing".

6.3.7 Pointing on random rubble stone masonry

In such pointing, the mortar shall be simply struck off with a trowel and the work left showing the natural irregularities in line and surface of the stones themselves. Other specifications shall remain same as per para 8.3 under sub head "Pointing".

6.4 Rough Cast Concrete Facing

6.4.1 The surface shall be prepared as for Cement plaster and then 2 cm backing coat of cement sand mortar 1:3 shall be applied. Subsequently, when the backing coat is in plastic state, a top coat 12 mm average thick cement and stone chips mixture in proportion 1:3 (stone chips 10 mm size and below) shall be applied by dashing the mixture on top with trowel to produce uniform rough texture. The mix shall again be dashed over the vacant spaces if any. The surface shall afterwards be cured for 10 days. After curing, the surface shall be brushed with hard wire brush to remove loose chips from the surface. A coat of cement wash shall then be applied, the cost of which shall be included in the rate of the item.

6.4.2 Rendered sand faced cement plaster

The surface shall be prepared as for cement plaster. The backing coat shall be 12 mm thick of cement plaster proportion 1:4 (1 cement and 4 sand) and keys shall be formed on the surface. After curing this coat sufficiently, the finishing coat 6 mm thick consisting of grey cement and screened coarse sand to required gradation (1:3) shall be applied and finished to the desired te texture to the satisfaction of the Engineer. The surface afterwards shall be cured for 7 days.

© 2022 MECON Limited All rights reserved

6.4.3 Plaster moulding

Where specified, plaster moulding shall be strictly as per drawings and details, and shall run clean and true from proper templates and moulds, to the entire satisfaction of the Engineer. Rates shall include for brick or concrete cores and for any necessary dabbing in cement mortar or brick or metal lath curing and final finish as desired. Where desired, all angles in internal moulding work shall be covered to a radius of 50 mm or as directed without any extra charges.

6.4.4 Floating coat with neat cement

When the plaster has been brought to a true surface with the wooden straight edge, it shall be uniformly treated over its entire area with a paste of neat cement and rubbed smooth so that whole surface is covered with neat cement coating. Smooth finishing shall be completed with a trowel immediately and in no case later than half an hour of adding water to cement.

6.4.5 Pebble dash plaster

Specification shall be same as that for rough cast concrete facing vide 8.4.1 except that pebbles or graded crushed stone, of size 10mm to 20mm or as specified/directed by the Engineer, shall be well washed and drained and then dashed/thrown wet on the plaster surfaces while it is still plastic, using strong whipping motion at right angles to the face of wall, pressed flat and filling uncover parts by hand so that finished surface represents homogeneous look. The finished surface shall be lightly tapped with a trowel to ensure good bond.

6.5 Punning with Lime or Plaster of Paris

6.5.1 Lime Punning

Lime punning shall be carried out with best quality approved lime. Lime shall be properly stirred, tempered with water to form a homogeneous mass and strained through fine cloth. The punning shall be laid and rubbed and troweled to an uniform smooth even finish using special trowels. Any unevenness shall be rubbed down with fine sand paper. The plaster must be dry before the lime punning is applied. The punning shall be kept wet for a period of 7 days. The lime paste shall be kept wet until use and no more quantity than can be consumed in 10 days shall be prepared at a time. No portion of the surface shall be leftout initially to be patched up later on.

6.5.2 Plaster of Paris punning

© 2022 MECON Limited All rights reserved

This shall be provided by using the best quality of plaster of Paris from approved manufacturer. Unless otherwise specified same procedure as for lime punning shall be followed for getting uniform smooth finish.

7.0 FLOORING, PAVING & FACING

7.1 Scope

Flooring, Paving and facing includes flooring, skirting and dado of various types encountered in plants, buildings, pavements etc. as described under respective heads. For the items which have not been covered up in this chapter completely or covered up only partly, specifications suggested by the manufacturers for the materials, surface preparation, workmanship and all other byeworks etc., shall be strictly followed. In addition to this the entire job will have to be carried out as per direction of the engineer, which shall be final.

7.2 Materials

Materials shall conform to Part-I of this series.

7.3 General

Flooring, skirting & dado may have to be done in discontinuous strips or areas to suit the needs of erection and commissioning of equipment. Flooring shall be done in close co-ordination with erection of equipment or other services and shall keep pace with the demands in respect of commissioning of individual equipment. No claims for extra shall be tenable for reasons of discontinuity of work or delay in having areas available for work.

Unless otherwise specifically included in the Schedule of Quantities or stated in the description of work, no extra shall be payable for works such as forming coves at internal angles, nosing at plinths, steps, window sills and stair treads, dishing in bath rooms, toilet & other places and cutting to line and fair finish to top edge of skirting and dado. Thickness mentioned shall be the minimum.

7.4 Sub-base

Flooring at ground level having sub-base of sand or earth as specified shall be laid in layers of 15 cm, watered and consolidated by rolling with hand roller or ramming with iron rammer and with butt ends of the crow bars. When filling reaches the required level, the surface shall be flooded with water for 24 hours, allowed to dry and then rammed and consolidated to avoid any settlement later. The thickness of the sub-base shall be as specified either in the drawing or in the Schedule of Items.

© 2022 MECON Limited All rights reserved

7.5 Subgrade

The surface shall be brought to the desired level before subgrade is laid, loose pockets shall be filled up and whole surface shall be consolidated by tamping. Vegetable growth and other decomposed matter, rubbish etc., shall be removed.

7.5.1 Hard core subgrade

Where hardcore subgrade is specified, stone/slag boulders/laterite boulders shall be laid closely stacked together, the longer edge being laid vertically. All interstices shall be filled with smaller particles of the same material or with gravel or red earth. The top surface shall be spread with loose moorum sufficient to cover the gap and to achieve uniform top surface. The surface shall then be adequately watered and rolled by roller.

Hard core shall be laid to form the desired slope in the finished floor.

7.5.2 Brick Khoa subgrade

Over burnt bricks shall be used for getting brick khoa as per sizes described in Schedule of Items. The khoa shall be laid uniformly and rammed in dry and wet conditions so as to get a uniform compact surface.

7.6 Cement Concrete Flooring with Integral Finish

Cement concrete shall be mixed, laid, consolidated and cured as described in Chapter "Concrete". Laying of concrete shall be done in alternate panels. The size and division of panels shall be as per direction of Engineer. The mix or grade of concrete shall be as specified in Schedule of Items.

The finished surface may be rendered smooth by trowel finishing to provide an appearance of fine and smooth textured surface and in panels or in geometric pattern as specified in Schedule of Items or as directed by Engineer.

7.7 Concrete Flooring with Granolithic Finish (Artificial Stone Flooring)

Granolithic finish shall either be laid monolithically over base concrete or separately over hardened base concrete. The subgrade shall be either brick khoa/lime concrete/cement concrete, as specified. Flooring shall be laid and finished according to IS: 5491.

7.7.1 Thickness

© 2022 MECON Limited All rights reserved

Unless otherwise mentioned the thickness of flooring including topping shall be either 25 mm or 40 mm or 50 mm as shown on drawing/Schedule of Items. The net thickness of topping shall be 6 mm for 25 mm thick floor, 10 mm for 40 mm and 12 mm for 50mm thick floor. An additional allowance of 2mm in thickness of topping shall be made for cutting and grinding margin wherever polishing is specified in the item. The rate of the item will be inclusive of this.

7.7.2 Mix

For base or under bed course, the mix shall be 1:2:4 concrete, unless specified otherwise. The mix of the topping shall consist of 1 part cement:1 part coarse sand: 1 part coarse aggregated by volume or 1 part cement and 1 part stone chips. The coarse aggregate shall very hard like granite and well graded and size of chips shall be 3mm for 6mm topping & 6mm to 3mm for 10mm or more thick topping. Minimum quantity of water to get workability shall be added.

7.7.3 Laying

a) Laying of monolithic topping

The concrete base or underbed shall be laid as per specification "Cement Concrete" and levelled upto the required grade. The surface shall remain sufficiently rough to take the finish.

To prevent construction cracks, the panels shall be divided in square or rectangular pattern. For floor finish of 40mm thickness or above, the maximum panel area shall be 2.5 sq.m. with none of the sides exceeding 2.5m, however for lesser thickness these shall be 1.5sq.m. and 2.5m respectively. The dividing strip may be aluminium or glass or as specified and shall have the same depth as that of floor. Within about 2 to 3 hours of laying the base while it is still fully 'green' the topping shall be laid evenly to proper thickness and grade. The topping shall be pressed firmly and rigorously to form full bond with the base/underbed.

The laitance brought to the surface during compression shall be removed carefully without disturbing the stone chips. The surface shall then be lightly troweled to remove all marks and shall be left for sometime till moisture disappears from it. Fresh quantity of cement @ 2.2 Kg per sq.m. of the flooring shall be mixed to form a thick slurry and spread over the surface while concrete is still green. The cement slurry then shall be floated even & smooth. Polishing, if specified, shall be done with polishing machine and the portion where machine cannot be used manually to the satisfaction of the Engineer. If specified so the surface of the flooring shall be finished

© 2022 MECON Limited All rights reserved

ribbed, chequered or laid in slope without any extra cost unless specified so in the item. On completion, the floor shall be kept flooded with water for 10 days and shall be adequately protected before it is sufficiently hard.

(b) Laying of topping separately on hardened base

The sub base shall be laid as in clause 7.7.3. The surface of the base concrete shall be thoroughly brushed and cleaned free from all dirt, mortar droppings and laitance etc.. Where the surface has hardened too much, chipping or hacking of the surface may be necessary. The surface shall then be wetted with water for several hours and surplus water mopped. Neat cement slurry at 2.75Kg/sq.m. of surface shall be brushed into the clean surface. The topping then shall be laid as described in clause 7.9.3.

7.7.4 General

The junction of the floors with all plaster dado or skirting shall be rounded of with 1:1 cement sand mortar & polished, if specified or shown in drawing.

7.7.5 Curing

Immediately after laying, the finish shall be protected against rapid drying. As soon as the surface had hardened sufficiently, it shall be kept continuously moist for at least 10 days by means of wet gunny bags or ponding of water on the surface. The floor shall not be exposed to use during this period.

7.7.6 Grinding & finishing

Where grinding is specified, it shall start only after the finish has fully set. The grinding shall be done with carborundum stone of No. 60, then No. 80 and then 120 as per the method as specified in in-situ mosaic flooring. After final polishing, the floor shall be rubbed with oxalic acid and then wax polished.

7.8 Dado & Skirting Work (Grey Cement Skirting/Dado)

A backing coat of 12 mm thick and 15 mm thick shall be applied on walls after proper dabbing of the surface for a finished thickness of 18 mm and 21 mm thick respectively, with cement plaster of proportion 1:4 (1 cement and 4 approved quality sand) or as specified. Over this a top coat 6mm/7mm thick consisting of one cement to one stone chips 3 mm nominal size shall be applied. If grinding and polishing specified, the same shall be done as per granolithic flooring with carborundum stones.

© 2022 MECON Limited All rights reserved

7.9 **Flooring & Facing with Redoxide of Iron (Red Artificial Stone Flooring)**

It shall consist of an underbed or base course and topping over already laid & matured concrete subgrade.

7.9.1 Thickness

Unless otherwise specified the total thickness of the flooring shall be either 40 mm or 25 mm of which the topping shall not be less than 6 mm (net) for 25 mm thickness and 10 mm (net) for 40 mm thickness. The topping shall be of uniform thickness, the underbed may vary in thickness to provide necessary slopes. For vertical surfaces the total thickness shall be 18 mm, of which the topping thickness shall be 6 mm (net). Where grinding (cutting) & polishing is specified a minimum allowance of 2 mm shall be kept for cutting & polishing so that the net specified top thickness is achieved. All junctions of vertical with horizontal shall be rounded neatly to uniform radius of 25 mm or as shown in the drawing.

7.9.2 Mix

i) Course or base course

The underbed for floors and similar horizontal surfaces shall consist of a mix of 1 pert cement, 2 parts coarse sand and 4 parts 10 mm down graded stone chips by volume. For vertical and similar surfaces the mix shall consist of 1 part cement to 3 or 4 parts coarse sand by volume as specified in the item.

ii) Topping course

For the topping white cement and red oxide of iron pigment powder shall be dry mixed thoroughly (generally 10:1 by weight) to produce the desired colour when laid. The mix shall then be prepared with 1 part white cement (mixed with pigment) and 3 parts coarse sand by volume. The whole quantity required for each visible area shall be prepared in one batch to ensure uniform colour.

7.9.3 Laying

The underbed shall be laid in panels of maximum area 2.5 sq.m. each and no side shall be more than 1.5m long. For outdoor locations the maximum area shall be 2.0 sq.m. or as specified. The forms for the panels shall have perfectly aligned edges to the full depth of the total thickness of finish. Aluminium or glass dividing strips shall be used as forms. The underbed shall be laid compacted, levelled and brought to proper grade with a screed

© 2022 MECON Limited All rights reserved

or float. The topping shall be placed after about 24 hours while the underbed is still somewhat 'Green' but firm enough to receive the topping.The surface of the underbed shall be roughhead for better bonding. The topping shall be rolled for horizontal areas and thrown and pressed for vertical areas to extract all superfluous cement and water to achieve a compact dense mass fully bonded with the underbed. The topping shall then be levelled up by troweling and finished smooth with a slurry made with already prepared cement and pigment mixture. About 2.0 kg of the mixture shall be consumed/per sq.m. for horizontal surface, and 1.0 kg for vertical surface.

7.9.4 Grinding & polishing

Where grinding & polishing specified, the same shall be done 36 hours after laying when the surface has hardened sufficiently. It shall be polished with polishing stone, in sequence of different grades of carborundum stones (first No. 60, then No. 80 & then No.120) till a smooth shiny surface to the satisfaction of the Engineer is achieved. After final polishing, the finished areas shall be rubbed with oxalic acid and then wax polished.

7.10 Glazed Tile Finished Flooring & Facing

This finish shall be composed of glazed earthen tiles with an underbed laid over a concrete or masonry base.

7.10.1 Thickness

Unless specified the total thickness shall be 21 mm for flooring & 18 mm for dado/skirting for the underbed.

The necessary cutting into the surface receiving the finish, to accommodate the specified thickness shall be done.

7.10.2 Tiles : Glazed

These shall conform to the requirement of IS: 777. The tiles shall be of earthenware, covered with glazed white or coloured, plain or with designs, of 149 mm x 149 mm or 99mm x 99mm nominal sizes and 5,6 & 7 mm thick unless otherwise specified. Specials like internal and external angles, beads, covers, cornices, corner pieces etc., shall match. The top surface of the tiles shall be glazed with a gloss or matt unfading stable finish as desired by the Engineer. The tiles shall be flat and true to shape. The colour shall be uniform, and fractured section shall be fine grained in textures, dense and homogeneous.

The coloured tiles, when supplied, shall preferably come from one batch to avoid difference in colour.

© 2022 MECON Limited All rights reserved

7.10.3 Mix : Underbed

The mix for the underbed shall consist of 1 part cement and 3 parts coarse sand mixed with sufficient water or any other mix if specified and shall be 12mm thick minimum or as specified.

7.10.4 Laying & finishing

The underbed mortar shall be evenly spread and brought to proper grade and consolidated to a smooth surface. Before laying the underbed, over the base/subgrade a coat of cement slurry shall be applied over the subgrade. Before the underbed has time to set and while it is still fairly moist but firm, cement shall be hand dusted over it and the tiles shall immediately be placed upon and firmly pressed by wooden mallet on to the underbed until it achieves the desired level. The joints shall be practically invisible and filled with non-staining white cement/white cement mixed with pigment for coloured tiles. Internal angles shall be provided with `specials'. Drains shall be provided with `specials'. The tiles shall be thoroughly cleaned after completion. The tiles shall be laid to the slope specified in the drawings and truly vertical on walls when used as skirting.

7.10.5 Curing & cleaning

After flush pointing the joints, the surface shall be cured for 7 days by keeping it wet. The surface shall be then cleaned with soap or suitable detergent, washed fully and wiped with soft cloth to prevent scratching before handing over.

7.11 Marble Flooring

7.11.1 Thickness

Unless specified otherwise the underbed shall be average 20 mm for flooring and 12 mm thick for vertical surfaces. The slabs may be 20 mm, 25 mm, 30 mm or 40 mm thick as specified.

7.11.2 Marble slab

The slabs shall be made from selected stock which are hard, sound, homogeneous and dense in texture and free from flaws, angles and edges shall be true, square, free from chipping and surface shall be plane. The slabs shall preferably be machine cut to the required dimensions. Tolerance of plus or minus 5 mm in dimensions and plus or minus 2 mm in thickness will be allowed. Unless specified the slabs shall be minimum 300 mm x 300 mm. The stone slabs shall come from specific regions and

© 2022 MECON Limited All rights reserved

in specified quality with top surface fine chisel dressed. All sides shall also be fine chisel dressed to the full depth to allow finest possible joints.

The slabs shall be delivered to the site well protected against damages and stored in dry place under cover.

7.11.3 Mix : Underbed

The underbed, unless specified otherwise for floor and similar horizontal surfaces shall be 1 part lime putty: 1 part surkhi: 1 part coarse sand or 1 part cement: 4 parts coarse sand mixed with sufficient water to form a stiff workable mass and shall be on 20mm thick bed. For skirting and dado and all vertical surfaces it shall be 12 mm thick and composed of 1 part cement and 3 parts coarse sand.

7.11.4 Laying

The sides and top surface of the slabs shall be machine rubbed with coarse sand stone and washed clean before laying. The underbed mortar shall be evenly spread and brought to proper level on the area under each slab. The slab shall be laid over the underbed, pressed and tapped down with wooden mallet to the proper level. The slab shall then be lifted and the underbed corrected as necessary and allowed to stiffen a little. Next, a thick cement slurry at 4.4 Kg of cement per sq.m. shall be spread over the surface. The edges of the slab shall be buttered with slurry of cement, grey/ white/mixed with pigment matching the colour of the stone slabs. The slab shall be gently laid and tapped with wooden mallet to bed properly to a very fine joint and to the required level. All surplus cement slurry shall be removed and the surface mopped clean with wet soft cloth. The laid finish shall be cured for 7 days by keeping it wet.

7.11.5 Polishing, finishing

Fine chiseling shall be done to remove the slight undulations that usually exist at the joints. The polishing and finishing shall be done as specified under terrazzo flooring. However, the joints shall be so fine in the case of stone slabs that grouting shall not be called for.

7.12 Marble in Facia or Dado

Marble tiles of approved shade, variety, size and thickness as specified in the item shall be used. They shall be of selected quality, dense, uniform and homogeneous in texture and free from cracks or other structural defects. The exposed face shall have no unsightly stains, veins and defects. They shall have uniform milky white or coloured shade or patterns of colours approved by the Engineer before ordering the tiles. The surface shall be fine polished and sides machine cut, true to square.

© 2022 MECON Limited All rights reserved

When a single course of marble slab is to be fixed as in dado etc., the slabs shall be fixed as described below:

Mortar pads of 1:3 C.M. (1 cement: 3 coarse sand) of uniform width shall be stuck on to the wall at close intervals and the marble slabs shall be pressed on to them firmly. The remaining cavities if any shall then be filled with thin grout of cement mortar of the same proportion. The sound coming, on gently tapping of the slab, will indicate if there are hollows. When the hollow cannot be filled with grout and the finished slab continues to give a hollow sound on tapping, the slab shall be removed and reset. For the facia work where more than one course is required the marble slabs shall be of matching stand and veins to form architectural pattern as per drawings and shall be fixed in the same way as described above except for the horizontal joints of the slabs, where adjacent slabs shall be held together by a brass pin passing through a hole drilled into the slabs. In addition, wrought iron/dowels shall be provided to anchor the slabs to the wall. The metal cramps shall be counter sunk into the joints of the slab and it shall be located about a metre apart subject to a minimum of one for each slab for each horizontal joint.

The facing shall be fixed truly in plumb and in perfect line or curves as shown on the plans. The courses and joints shall be as directed by the Engineer. The surface shall be protected from sun and rain and cured for 10 days and shall be finally polished with carborundum stones as for skirting & dado of cast-in-situ terrazzo.

7.13 Flooring/Paving with Hardener like Ironite

This will consist of a topping (incorporating iron particles) to bond with concrete base while the latter is 'Green'.

7.13.1 Thickness

Unless otherwise specified in the Schedule of Items, the total thickness of the floor with metallic hardener finish shall be 40 mm or 50 mm of which the topping shall be 10 mm (net) for 40 mm & 12 mm (net) for 50 mm

7.13.2 Material (metallic hardener)

The hardening compound shall be uniformly graded iron particles free from non-ferrous metal impurities, oil, grease, sand soluble alkaline compounds or other injurious materials. When desired by the Engineer, actual samples shall be tested.

7.13.3 Mix

© 2022 MECON Limited All rights reserved

Unless otherwise specified, the mix for underbed shall be of 1:2:4 concrete and stone chips shall be 12 mm down grade. For topping the proportion of the metallic hardener shall be as specified or as indicated by the manufacturer. However, in absence of any such direction 1 part metallic hardener shall be mixed dry with 4 parts cement, by weight. To this mixture 6 mm nominal size stone chips shall be added in proportion of 1 part cement (mixed with hardener) to 2 parts of stone chips by volume and uniformly mixed. Minimum quantity of water shall be added to make it workable.

7.13.4 Laying & finishing

The under bedding course of base course shall be laid as per specification of laying underbed for Red artificial stone flooring. The surface shall be roughened by wire brush as soon as possible. The finish top coat shall be laid while the concrete base is still fairly 'green' within about 3 hours of laying of the later. The finish shall be of uniform and even dense surface without trowel marks, pin holes etc. This topping layer shall be pressed firmly and worked vigorously and quickly to secure full bond with the concrete base. Just when the initial set starts the surface shall be finished smooth with steel trowel.

7.13.5 Curing

The finished floor shall be cured for 7 days by keeping it wet.

7.14 Chemical Resistant Tiles Flooring / Facing (Either of natural stone or prepared tiles)

This shall include all varieties of special tiles used for specific chemical resistance function and an underbed over already laid concrete or masonry. The Contractor shall get it done by specialised manufacturer & get guarantee of its performance.

7.14.1 Tiles

The chemical resistant tiles as detailed in the Schedule of Items shall be of the best indigenous manufacture unless otherwise specified and shall be resistant to the chemical described in the Schedule of Items. The tiles shall have straight edges, uniform thickness, plain surface, uniform non-fading colour and textures.

Usually the chemical resistant tiles shall not absorb water more than 2% by weight. The tiles shall have at least compression strength of 700 kg/cm2. The surface shall be abrasion resistant and durable.

© 2022 MECON Limited All rights reserved

7.14.2 Laying

The mortar used for setting or for underbed the tiles shall be durable and strong. The grout which shall be to the full depth of tile shall have same chemical resistant properties as that of tiles. Joints shall be pointed if so desired. The setting and fixing shall be according to the manufacturer's specification approved by the Engineer.

7.15 Chemical Resistant in Situ Finished Flooring/Facing

Chemical resistant in situ finish shall be as called for in the Schedule of Items. About its performance the Engineer shall have to be fully satisfied by test results and examination of similar treatment already in existence. The Contractor shall get it done by a specialised manufacturer, get guarantee of performance from the organisation and pass it on to the owner in addition to his own guarantee.

7.16 Acceptance Criteria

The Contractors shall satisfy the Engineer specially for the workmanship of the following finished floor:

(a) Level, slope, plumb as the case may be

(c) Alignment of joints, dividing strip etc.

(d) Colour, texture

(e) Surface finish

(f) Thickness of joints including the workmanship in joints.

(g) Details at edges, junctions etc.

(h) Performance

(i) Precautions specified for durability.

(j) Effluent treatment plant

8.0 WOOD WORK

8.1 General

Wood work shall be neatly and truly finished to exact dimensions and details as per drawings, without patching or plugging of any kind. Rebates, roundings and mouldings as shown in drawings shall be made before assembling. Exposed work shall be finished smooth with well planed faces.

© 2022 MECON Limited All rights reserved

All assembly of shutters of doors, windows, ventilators and frames thereof shall be exactly at right angles. In the case of frames, the right angle shall be checked from the inside surfaces of the respective members.

All door and window frames shall be clamped together so as to be square and flat at the time of delivery. Door frames without sills shall be fitted with temporary stretchers.

Horns of frames and other parts that go into or butt against the masonry, shall be protected against moisture and decay with two coats of coal tar or other approved protective material.

All surfaces of the door, window and ventilator frames and shutters which are required to be painted ultimately shall be covered evenly by brush with a priming coat of approved primer. In the case of doors to be polished or varnished, a priming coat of approved polish or varnish shall be given before delivery. No primer shall be applied to the wood work until it has been inspected and passed by the Engineer.

8.2 Joinery

All heads, posts, transoms and mullions etc., of doors, windows and ventilators shall be made out of single pieces of timber only. The heads and post shall be through- tenoned into the mortices of the jamb posts to the full width of the latter and the thickness of the tenon shall be not less than 1.25 cm. The tenons shall be close fitting into the mortices and pinned with corrosion resisting metal pins not less than 8 mm diameter or with wood dowels not less than 10 mm diameter. The depth of rebate in frames for housing the shutters shall in all cases be 1.25 cm and the rebate in shutters for closing in double shutter doors or windows shall be not less than 2 cm. Unless otherwise specified, all joints shall be mortice and tenon joints with the ends of the tenons exposed to view. Joints shall fit truly and fully without fillings. The contact surfaces of tenons and mortices shall be treated, before putting together, with an approved adhesive conforming to I.S:848 and 851.

8.3 Shrinkage & Tolerance

The arrangement, joining and fixing of all joinery work shall be such that shrinkage in any part and in any direction shall not impair the strength and appearance of the finished work.

The tolerance on overall dimensions shall be within the limits prescribed in IS: 1003 (Part 1 & 2).

8.4 Fixing

© 2022 MECON Limited All rights reserved

Door and window frames shall generally be built in at the time the walls are constructed. Alternatively, where permitted by the Engineer, the frames may be subsequently fixed into prepared openings for which purpose holes to accommodate the holdfasts shall be left at the time of construction. Where the frames are subsequently fixed into prepared openings in the wall such openings should be 25 mm more than the overall width of the door, window or ventilator frame to allow minimum 12mm plaster on each jamb. The height of the unfinished opening shall depend upon whether a threshold is required or not. While fixing the door care shall be taken to see that at least 6 mm space is left between the door and the finished floor. The M.S. clamps fixed to the frame shall be inserted in the holes and jammed in cement concrete M-15 or (1:2:4 mix) with 20 mm down graded stone chips after holding the frame in proper position to the line, level and plumb.

The size of the concrete block shall be 250 x 125 x 85mm unless otherwise specified.

8.5 Tarring

Timber in contact with earth, concrete, plaster or masonry shall be treated with boiling coal tar or 2 coats of wood preservative treatment like hot solingnum or creosite oil etc. before fixing the frame in position.

8.6 Fittings

Unless otherwise specified, three holdfasts shall be fixed on each side of a door frame, one at the centre point, and the other two at 30 cm from the top and the bottom of the door frames. In the case of windows and ventilators, a pair on each side shall be fixed at quarter points of the frames. Unless otherwise specified the hold-fasts shall be of mild steel plate 40 x 3 x 225 mm long, fish tailed at one end and screwed to the frame in the formed rebates.

Generally, each door shutter shall be fixed to the frame with three hinges of approved manufacture, one at the centre and the other two approximately 24 cm from the top and bottom of the shutter. Each window shutter shall be fixed to its frame with two hinges at the quarter points.

Locks, handles, door closers, stoppers etc., shall be fitted as shown in drawing or described in the Schedule of Items.

8.7 Doors, windows & ventilators etc.

© 2022 MECON Limited All rights reserved

Dimensions of the various components of doors, windows and ventilators shall be in accordance with IS: 1003 (Part 1&2) Table- III or as shown on the drawings. The work shall be carried out as per detailed drawing. The wooden members shall be planed, smooth and accurate. They shall be cut to the exact shape and size without patching or plugging of any kind. Mouldings, rebates, curves and roundings etc. shall be done as shown in the drawing before the pieces are assembled into the shutter.

The thickness of stiles and rails etc shall be as per IS: 1003 (Part 1&2) unless otherwise specified in the item of works. These shall be properly and accurately mortised and tenoned. Rails which are more than 180mm in width shall have 2 tenons. Stiles and rails shall be made out of single piece upto 200mm in width. In case more than one piece of timber is used for members exceeding 200mm width, they shall be joined with a continuous tongued and grooved joint, glued together and reinforced with rust proof metal dowels or headless pins. The tenons shall pass clear through stiles. the stiles and rails shall have a 12mm groove, unless otherwise shown in the drawing, to receive the panel. In case of double shutters the rebate at the closing junction of the two shutters shall be as per clause 5.5 of IS: 1003 or as shown in the drawing. Primer coat shall not be put before shutters are passed by the engineer.

8.8 Panelled Shutters

These shall conform to IS: 1003 (Part I). Timber panelled shutters shall be constructed in the form of timber frame work of stiles and rails with panel inserts of timber, plywood, block board, veneered particle board, hard board or asbestos cement board.

Stiles, rails and panels in door shutters shall be of the same species of wood.

Timber panels shall be of minimum width of 150mm. When made from more than one piece, the pieces shall be jointed with a continuous tongued and grooved joint, glued together and reinforced with metal dowels. No single panel shall exceed 0.5 m2 in area. Timber panels shall be fixed only with grooves but additional beadings may be provided either on one side or both sides.

Unless otherwise specified thickness of panel for 35mm thick shutter shall be 15mm and for 40mm and above thick shutter, it shall be 20mm. For 25mm thick shutter, panel thickness shall be 12mm.

Apart from timber panels other materials like plywood, Block board, particle board, Hard board and Asbestos cement may also be used for panelling purpose and shall be fixed with grooves or beading or both as per provisions made in IS:1003 (Part-1).

© 2022 MECON Limited All rights reserved

Timber suitable for manufacture of door shutter have been grouped under class a,b,c & d in Table 1 of IS: 1003 (Part-1).

8.9 Glazed Shutters

The openings for glazed shutters shall be rebated and moulded out of solid timber. Plain sheet glass for panels shall be of approved quality as specified. Wherever specified, ground glass or frosted glass of approved quality shall be used in place of plain sheet glass. Unless otherwise specified glass panes shall be fixed by means of moulded beads and suitable MS panel pins. A thin layer of putty shall be applied between glass panes and sash bars and also between glass panes & beading.

8.10 Flush Door Shutters

Unless otherwise specified, flush door shutters shall have a solid/cellular core, a teak wood frame, and shall be faced with approved quality of plywood on both faces. The core and stock shall be made from well seasoned approved timber and treated with approved preservatives. The plywood faces shall be glued on to the solid/cellular core with waterproof glue under pressure and heat. The construction of flush doors shall be such that no difficulty should arise in fixing mortice locks, hydraulic door closers etc. The shutters shall be rebated in the case of the double leaf doors. Where specified flush doors shall be provided with vision panels, rectangular/ round or louvered.

If specified so, the flush door shall be solid block board core or solid particle board core construction. The workmanship and overall finish shall be of very high standard and shall conform to IS:2191 (Part 1&2) & 2202 (Part 1&2). The shutters shall be procured from approved manufacturer bearing IS certification mark only.

8.11 Other types of shutters

8.11.1 Wooden hand rails

Wooden hand rails shall be of approved quality teak wood fixed to concrete or metal balustrade with concealed steel or metal lugs and bolts as per drg. Joints will be made with concealed crews and dowels. All bends, mitres, coves, moulds etc. will be strictly to proper profile and finally smoothened by sand paper. The hand rail shall be finished with wax or french polish or painting as per direction of the engineer.

8.11.2 Hardware fittings for door, windows & ventilators

© 2022 MECON Limited All rights reserved

All mortice or rim locks, latches, cabinet and wardrobe locks, hydraulic door closers, floor springs etc. shall be of Godrej, Everite make or of similar approved make. The rate shall include for all necessary screws, other adjuncts, fixing in position and is for the completed work. the finish shall be as specified in the schedule of quantities. Door, window and ventilator fittings shall be as per specifications already described. The rates for doors, windows and ventilator shutters shall include the cost of fixing the fittings, with the necessary screws to the shutters and the frame. The cost of fittings only shall be paid separately. Where specified in the schedule of quantities, the cost of fittings shall be included in the rates for doors, windows and ventilators shutters. In such case the contractor shall supply and fix the various fittings strictly to the standard laid down in the schedule of hardware fittings and no separate payment for this shall be made.

8.12 Inspection

The Contractor shall provide all facilities to the Engineer for the inspection of the goods at his premises. No primer shall be applied until the wood work has been inspected and passed by the Engineer. The Engineer shall have the option of rejecting any article or asking for replacement of any article found to be defective or not complying with the requirements of this specification and the relevant Schedule of Items.

9.0 METAL DOORS, WINDOWS AND ROLLING SHUTTERS

9.1 General

Doors, windows and ventilators etc., shall be truly square and flat, i.e. free from twist and warp. The general fabrication shall conform to IS:1038 & IS: 1361 as applicable.

9.1.1 Frames shall be constructed of sections which have been cut to length and mitred. They shall be morticed, reinforced, drilled and tapped for hinges and lock and bolt strikes. Where necessary, frames shall be reinforced for door closers. Flash butt welding or any other suitable method which gives the desired requirement, with mitred corners shall be used. Rubber door silencers shall be furnished for the striking jamb. Loose "T" masonry anchors shall be provided. Frames shall finish flush with floor and adjustable floor anchors shall be supplied. Frames shall be brought to site with floor ties/weather bars installed in place. All frames shall be square and flat. Door thresholds shall be provided as shown on drawing. Doors without threshold shall have bottom tie of approved type.

9.1.2 The Contractor shall first submit for the approval of the Engineer, the name and address of the manufacturer whose metal casements and doors and windows he intends to use, together with typical drawings and specifica-

© 2022 MECON Limited All rights reserved

tions, describing the details of construction for each type of door/window/ventilator etc.

9.1.3 All steel doors, windows and ventilators shall be either galvanised or painted. All steel surfaces shall first be thoroughly cleaned free of rust, scale or dirt and mill scale by pickling or similar process and then shall be painted with one coat of an approved primer conforming to IS: 102 before despatch. Alternatively they may be galvanised by the "Hot Dip" zinc spray or electro- galvanizing process as described in IS: 1361.

9.2 Fixing

Doors, windows and ventilators shall not be built in at the time the walls are constructed but shall be subsequently fixed into prepared openings, as laid down in IS: 1081. Holes to accommodate the fixing lugs are to be left or cut, and the casements fixed after all the rough masonry and plaster work have been finalised. The lugs of the casement shall be jammed in cement concrete (15C Mark)/(1:2:4) mix after holding the casement in proper position, line and level.

The width of the clear unfinished opening in the wall should be 25 mm more than the overall width of the door frame to allow for plaster on each jamb. The height of the unfinished opening shall depend upon whether a threshold is required or not. While fixing the door, care shall be taken to see that at least 6 mm space is left between the door and the finished floor.

9.3 Fittings

Hardware shall be fixed as late as possible, preferably just before the final coat of paint is applied. It shall be fitted in a workmanlike manner, so that it may not work loose and in such a way that screws and pins are not marked and mutilated by hammers and screw drivers. It shall be tested for correct operation. Where specified, doors shall be fitted with a three-way bolting device which can be operated from outside as well as inside, and a locking system, which can similarly be operated from either side. Solid steel bolt handles shall be provided, one on the outside and one on the inside of each shutter. In case of doors provided with a service door, the lock shall be fitted on the service door. All materials shall be the best procurable and shall be approved by the Engineer.

9.4 Normal Steel Plate Doors

Steel doors may be of the hinged type or sliding/ folding type, single shutter or double shutter, and of single-walled or double walled construction, as specified on the drawings or Schedule of Items. All doors shall be provided with a sturdy frame and hold fasts for fixing into the wall. Unless otherwise specified, the frame shall be prepared from mild steel

© 2022 MECON Limited All rights reserved

angles of size not less than 65 x 65 x 6 mm electrically welded at the corners and the shutter shall be made from flat steel sheet of 18 gauge or 1.25mm thickness with a frame of mild steel angles not less than 50 x 50 x 6 mm all round, suitably braced. The whole shutter shall be of welded construction and shall be hung at the sides by means of three or four hinges as specified.

9.4.1 Double Plate flush door shutters

Door shutters shall be 45 mm thick, completely flush design and shall comprise of two outer sheets or 18G or 1.25mm thick steel sheets, rigidly connected and reinforced inside with continuous vertical 20G or 0.99mm thick stiffeners, spot welded in position at not more than 150 mm on centres. Both edges of doors shall be joined and reinforced full height by steel channels placed immediately inside and welded to the door faces. Top and bottom of doors shall be reinforced horizontally by steel channels running full width of door. Doors shall not have more than 2.5 mm clearance at jambs and head, shall have proper level on lock stiles and rails and shall be reinforced at corners to prevent sagging or twisting. Pairs of double doors shall have meeting style edges bevelled or rebated. Where shown on drawing, or in the Schedule of Items, the doors shall be sound-deadened by filling the inside voids with mineral wool or other suitable approved materials. Doors shall be mortised, reinforced, drilled and tapped in shop for hinges, locks and bolts. They shall also be reinforced for closers, push-plates and other surface hardwares where necessary. Any drilling and tapering required for surface hardware shall be done at site. Where shown in drawing, provisions, shall be made for fixing glazing, vision panels, louvres etc. Glazing mouldings shall be of 18G or 1.25mm thick steel or extruded aluminium sections with profiles shown in drawing and suitable for fixing 6 mm glass. Louvre blades shall be V or Z shaped sections.

9.4.2 Single sheet door shutters

Single sheet doors shall be made from best quality 18g/1mm mild steel sheets, and shall present a flush surface on the outside. The inside shall be stiffened with a semi-tubular edge and central stiffening rail which shall convey the lock and other fixture. The frames shall be made from best quality steel sections. Wherever required or shown on drawings, provision for fixing glass panes, louvres etc., shall be made.

The manufacturing shall done as specified in "Double Plate Flush Door Shutters".

© 2022 MECON Limited All rights reserved

9.5 Pressed Steel Doors

All pressed steel doors shall be obtained from an approved manufacturer. The frame and shutters shall be fabricated from cold rolled or pressed steel sections. Unless otherwise specified, the thickness of all sheets used for frames shall be not less than 5 mm. The shutters shall be made of sheet steel of 2 mm thickness for single shutter doors and double shutter doors with or without service door. The plates shall be adequately stiffened with suitably placed stiffeners

The double-walled door shutter shall consist of two plates each 2.5 mm thick, separated by a gap of 33 mm in between making an overall thickness of 38 mm or as shown in drawing. The plates shall be adequately stiffened by means of suitably spaced horizontal steel stiffeners.

9.6 Steel Windows, Sashes, Ventilators, etc.

These shall conform to IS: 1038 and IS: 1361 as appropriate and as shown in drawings. The details as called for in the above codes shall be applicable for coupling mullions, transoms, weather bars, pivot arrangements for ventilators, etc.

9.6.1 Where composite unit openings are shown in drawings, the individual window units shall be joined together with requisite transoms and mullions. Where aluminium glazing beads are specified, they shall be extruded aluminium channel 9.5 mm x 1.6 mm (Indal Section No. 2209) unless otherwise shown in drawings.

All welds at the corner of casement shall be done by flash butt welding process or any other suitable method which gives the desired requirement and dressed flush on all exposed and contact surfaces

9.7 Collapsible Gate (Steel)

Mild steel collapsible gates shall be obtained from an approved manufacturer. These shall be of mid bar type made out of double channels each 20 x 10 x 2 mm with 20 x 5 mm diagonals and shall be top hung with roller bearings, and fitted with locking arrangement.

Collapsible gates under 3.0 metre height shall generally have 3 sets of lattices and those over 3.0 metre height, 4 sets of lattices. Guide tracks shall be fitted at the top and bottom, of T-iron 40 x 40 x 6 mm with 40 mm dia bearings in every fourth double channel

9.8 Steel Rolling Shutters and Grills

9.8.1 Unless otherwise specified the shutters shall conform IS:6248. Laths for rolling shutters shall be made from tested bright cold rolled, annealed M.S.

© 2022 MECON Limited All rights reserved

strips, not less than 0.9 mm thick for shutters upto 3.5 M wide and not less than 1.25 mm thick for shutters above 3.5 M wide and machine rolled at 75 mm rolling centres, interlocking with each other. The profile will be such as to prevent excessive deflection under specified wind load.

9.8.2 Rolling grills shall be constructed out of 6/8 mm dia rods at 35 mm on centres running horizontally flexible connected with vertical links spaced not more than 200 mm centres. Alternatively, rolling grills shall be made from perforated laths of approved design reinforced with 6 mm dia rods. End locks shall be heavy type and shall be provided at each end of alternate laths unless specified otherwise. Bottom bars shall be finished with two angles not less than 6 mm thick for external shutters. When shown in drawings, a flexible weather strip shall be applied to make tight contact with the floor. Guides shall be of such depth as to retain the shutter under a wind pressure of 150 kg/sq.m. or as specified. Shafts shall be of steel pipe of sufficient size to carry the torsional load with a maximum deflection of 1/360 th of span. Grease packed ball bearings or bushings shall be provided for smooth trouble free operation.Hoods shall be formed of not less than 20 gauge or 0.90 mm thick sheet mild steel, suitably, reinforced to prevent sag. Locks shall be slide bolt and hasp, or cylinder lock operable from both sides. Provision for securing hand chain with padlock, removable handle for hand cranks etc, shall be made as described in scheduled of items and as directed by the Engineer.

9.8.3 Laths for rolling shutters shall be made from tested bright cold rolled, annealed M.S. strips, not less than 0.9 mm thick for shutters upto 3.5 M wide and not less than 1.25 mm thick for shutters above 3.5 M wide and machine rolled at 75 mm rolling centres, interlocking with each other. The profile will be such as to prevent excessive deflection under specified wind load. Rolling grills shall be constructed out of 6/8 mm dia rods at 35 mm on centres running horizontally flexible connected with vertical links spaced not more than 200 mm centres. Alternatively, rolling grills shall be made from perforated laths of approved design reinforced with 6 mm dia rods.

9.8.4 End locks shall be heavy type and shall be provided at each end of alternate laths unless specified otherwise. Bottom bars shall be finished with two angles not less than 6 mm thick for external shutters. When shown in drawings, a flexible weather strip shall be applied to make tight contact with the floor. Guides shall be of such depth as to retain the shutter under a wind pressure of 150 kg/sq.m. or as specified. Shafts shall be of steel pipe of sufficient size to carry the torsional load with a maximum deflection of 1/360 th of span. Grease packed ball bearings or bushings shall be provided for smooth trouble free operation. Hoods shall be formed of not less than 20 gauge or 0.90 mm thick sheet mild steel, suitably, reinforced to prevent sag. Locks shall be slide bolt and hasp, or cylinder lock operable from both sides. Provision for securing hand chain with

© 2022 MECON Limited All rights reserved

padlock, removable handle for hand cranks etc, shall be made as described in scheduled of items and as directed by the Engineer.

9.8.5 Manually operated shutters/grills

Manually operated shutters shall be easily operable by one person. The speed of operation shall be about 0.3 metres per second. In general, manually operated shutters shall be push pull type for openings upto 9 sqm in area. Larger shutters shall be either chain and gear operated or crank and gear operated. The crank/handle shall be removable. All shutters shall be lockable from one or both sides as described in Schedule of Item or as desired by the Engineer.

9.8.6 Priming coat of shop coat

Shutters shall be painted with one coat of red lead or zinc chromate primer after they are inspected and found in order and acceptable. Where specified, doors shall be galvanized and subsequently painted one coat of zinc chromate for adhesion of field coat.

9.8.7 Erection

Door shall be installed by the manufacturer or his authorised representative and all work shall be as per manufacturer's instructions. Any drilling or cutting to concrete, masonry etc., shall be made good after erection of shutters and all abrasion to shop coat shall be touched up. All electrical work shall be in strict accordance with prevailing Indian Electricity Rules.

9.8.8 Inspection

After completing the manufacture of the different components of the rolling shutter, an arrangement for shop inspection by the Engineer shall be made to check the conformity with approved shop drawings.

9.8.8.1 Field inspection

After installing the shutters, the Contractor shall test the performance of the shutter in the presence of the Engineer. The doors shall be smoothly operable under all ambient conditions. All control and locking devices shall give fault-free performance.

9.9 Guarantee

The Contractor shall give one year's guarantee for the successful operation of the shutters. This shall be supported by a separate and unilateral guarantee from the manufacturer of the shutters.

© 2022 MECON Limited All rights reserved

9.10 Aluminium Doors, Windows, Frames

9.10.1 Anodised tubular aluminium doors shall be of approved make and shall be of size and design as per relevant drawing. Unless otherwise specified, the door frame shall be of 101.4mm x 44.6mm and shutter of 50mm tubular extrusions, 3mm thick. The opening arrangement shall be single action or double action as shown in drawing with spring hinges in floor. The glazing shall be 5.5mm thick plain glass panes fixed with necessary gaskets and aluminium beading strip. The door shall be provided with one security lock. The shutters shall be provided with 1.6mm thick 300x150mm push plates and 1.6mm thick 300mm wide kick plate of anodised aluminium for full width of door inside and outside.

The door frames shall be polished and anodized with approved colour. The average thickness of anodic coating shall not be less than 15 microns as per IS: 1868. Door frame shall be provided with approved anchors @ 90 cm c/c maximum for fixing.

9.10.2 Aluminium windows

Aluminium windows and ventilators shall conform to IS:1948 or equivalent as approved by the Engineer. Fixed frame shall be manufactured from aluminium alloy conforming to ISS-HE-9 WP. The fixtures like handles, stoppers, stays, etc., shall also be anodized aluminium and shall be of approved make. Glazing shall be 4mm thick plain glass and shall be fixed with glazing clips and metal putty. It shall conform to IS:1081. Average anodizing coating to windows, ventilators and fixtures shall not be less than 15 microns as per IS: 1868.

9.10.3 All work shall be fitted and shop assembled to a first job, and ready for erection. Shop joints shall be made to hair lines and then welded or braced by such method as will produce a uniform colour throughout the work. Wherever possible, joints shall be made in concealed locations and on edges of doors. Field connections of all work may be made with concealed screws or other approved type of fasteners. Glazing beads shall be shape fit type without visible screws and shall be of sizes to accommodate glazing. All work shall be adequately braced and reinforced as necessary for strength and rigidity.

10.0 GLAZING

10.1 General

Glazing shall be done with plain, frosted, ground glass or wired cast glass, laminated safety glass or toughened glass etc. as shown on drawings, described in the Schedule of Items or approved by the Engineer. The method of glazing adopted shall be such that movement of the structure, to

© 2022 MECON Limited All rights reserved

which the securing is done, does not transmit strain to windows, doors or ventilators as the case may be. The work shall generally conform to IS:1081 "Code of Practice for Fixing and Glazing of Metal Doors, Windows & Ventilators". The material for putty shall consist of whiting and linseed oil, raw-mixed in such proportion as to form a paste conforming to IS: 419.

10.2 Doors, Windows and Ventilators

Windows and ventilators shall be designed for putty glazing fixed from outside and glazed doors for fixing from inside. In addition, spring type glazing clips shall be provided at intervals of 30 cm, or as shown otherwise on drawings or described in the Schedule of Items. These shall be inserted into holes drilled in the shutters or frames as the case may be.

All glazing shall be puttied to the shutters of frames with good quality putty in addition to glazing clips. Glass panes shall not be placed directly against the metal/timber. A thin layer of putty shall be even spread over the glazing rebate and the glass pressed firmly against it. It shall be secured in position by means of teak wood beads for wooden shutters. Glass panes shall be set without springing & shall be bedded in putty and back puttied, except where moulding or gasket are specified. Putty etc. shall be smoothly finished to even lines. Figured glass shall be set with smooth side out. After completion of glazing work, all dirt stains, excess putty etc., shall be removed and the glass panes shall be left in perfectly acceptable condition. All broken cracked or damaged glass shall be replaced by new ones at the Contractor's cost.

10.3 Northlight Glazing

This shall consist of aluminium or steel glazing bars as shown on drawings or described in the Schedule of Item and be subject to approval of Engineer.The glazing parts shall be securely fixed in their frame and shall be weather-proof. All glazing shall be flashed to the surrounding so as to be weather-proof. Glass shall be fixed to the a astragals with glazing clips and putty.

11.0 WHITE WASHING, COLOUR WASHING AND PAINTING

11.1 Scope

This chapter deals with white washing, colour washing, distempering, cement washing, emulsion painting, silicate painting etc., to concrete and masonry surfaces and painting to the wood works and steel works. For the items which have not been completed or partly covered in this chapter, specifications suggested by the manufacturers for the materials, surfaces

© 2022 MECON Limited All rights reserved

preparation, workmanship and all bye works shall be strictly followed and shall be carried out as per direction of the Engineer.

11.2 Materials

Materials shall conform to Part - I

11.3 White Washing, Colour Washing

11.3.1 General

Wherever scaffolding is required/necessary, it shall be erected on double support tied together by horizontal pieces, over which the scaffolding planks shall be fixed. No part of it shall rest on or touch the surface which is being washed/painted. Where ladders are used, pieces of old gunny bags shall be tied on their tops to avoid damage or scratches to walls. For white washing the ceiling, proper stage scaffolding shall be erected. The surface on which wash is to be applied shall be thoroughly brushed free from mortar droppings and foreign matter.

11.3.2 White Wash

The wash shall be prepared from fresh stone white lime of approved quality and shall be thoroughly slaked on the spot mixed and stirred with sufficient water to make a thin cream. This shall be allowed to stand for 24 hours and then shall be screened through a clean coarse cloth. 4 Kg of gum dissolved in hot water shall be added to each cubic metre of the cream.

The approximate quantity of water to be added in making the cream will be 5 litres of water to 1 Kg of lime. Indigo/ultramarine blue upto 3 gm per kg of lime dissolved in water shall then be added and wash stirred well. Water shall then be added at the rate of about 6 litres per kg of lime to produce a milky solution. The white wash shall be applied with approved brushes to the specified number of coats. The operation for each coat shall consist of stroke of brush given from the top downwards, another from the bottom upwards over the first stroke and similarly one stroke horizontally from the right and another from the left before it dries. The white washing on ceiling shall be done prior to that on walls.

Each coat shall be allowed to dry before the next one is applied and shall be subjected to inspection and approval by the Engineer. No portion of the surface shall be left out initially to be patched up later on.

The finished dry surface shall not show any signs of cracking and peeling nor shall it come off readily on the hand when rubbed. Doors, windows, floors and such other parts of the building not to be white washed shall be protected from being splashed upon.

© 2022 MECON Limited All rights reserved

11.3.3 Colour Wash

A priming coat of white wash with lime shall be applied before applying two or more coats of the colour wash (as specified). Entire surface should represent a smooth and uniform finish. Sample of colour wash shall be duly approved by the Engineer before application. Same specification as that of white wash shall be followed for colour wash also using necessary amount of colouring ingredient of approved tint.

11.3.4 White Washing with Whiting

Whiting (ground white chalk) shall be dissolved in sufficient quantity of warm water and thoroughly stirred to form a thin slurry which shall then be screened through a clean coarse cloth. 2 Kg of gum and 0.4 Kg of copper sulphate dissolved separately in hot water shall be added for every cum. of slurry which shall then be diluted with water to the consistency of milk so as to make wash ready for use. Other specification remains same as per white washing with lime.

11.4 Cement Primer Coat

The surface shall be thoroughly cleaned of dust, mortar, droppings etc., and shall be allowed to dry for at least 48 hours. It shall then be rubbed thoroughly be sand paper to give a smooth and even surface. Any unevenness shall be made good by applying putty, made of plaster of paris mixed with water on the entire surface including filling up the undulation and then sand papering the same after it is dry. The cement primer shall preferably be applied by brushing and not by spraying. Horizontal strokes shall be given first and vertical strokes shall be applied immediately, afterwards. This entire operation will constitute one coat. The surface shall be finished as smooth as possible, leaving no brush marks.

11.5 Water-proof cement paint

The prepared surface shall be thoroughly wetted with clean water before water proof cement paint is applied. The paint shall be prepared strictly as per manufacturer's specifications, in the absence of which it shall be mixed in two stages. The first stage shall comprise of 2 parts of water proof cement paint and one part of water stirred thoroughly and allowed to stand for 5 minutes. Care shall be taken to add the paint gradually to the water and not vice versa. The second stage shall comprise of adding further one part of water to the mix and stirring thoroughly to obtain a liquid of workable and uniform consistency. The paint shall be mixed in such quantities as can be used up within an hour of its mixing.

© 2022 MECON Limited All rights reserved

Paint shall be applied with brushes or spraying machine The solution shall be kept well stirred during the period of application. It shall be applied as far as possible on the surface which is on the shady side of the building so that direct heat of the sun on the surface is avoided. Painted surfaces shall be sprinkled with water 2 or 3 times a day. This shall be done between coats and for at least 2 days following the final coat. The curing shall be started as soon as paint has hardened so as not to damage by sprinkling of water say about 12 hours after the application. A uniform shade should be obtained after application of paint. Cement paint shall not be applied on surfaces already treated with white wash, colour wash, distemper, varnish paint etc., and on gypsum, wood and metal surfaces.

11.6 Synthetic washable distemper

The surface shall be prepared as for Cement Primer Coat. A primer coat of cement or distemper primer shall be applied as specified in the description of the item. Unevenness in the plaster shall be made good by applying plaster of Paris putty mixed with distemper of the colour to be used on the entire surface including filling up the undulations. The surface shall then be rubbed down with a fine grade sand paper and made smooth. After the primer coat has dried for at least 48 hours, the surface shall be lightly sand papered to make it smooth, taking care not to rub the priming coat out. All loose particles shall be dusted off. One coat of distemper properly diluted with thinner, shall be applied with brushes/rollers in horizontal strokes followed immediately by vertical ones which together constitute one coat. The subsequent coats shall be applied in the same way. Two or more coats of distemper as are found necessary shall be applied to obtain an even shade. A time interval of at least 24 hours shall be allowed between consecutive coats. The brushes shall be of 15 cm. double bristled type. They shall be maintained in proper condition and those that are dirty or caked will not be allowed to be used. The finished surface shall be even and uniform without patches, brush marks, distemper drops etc. Sufficient quantity of distemper shall be mixed to finish one room for applying one coat in one operation.

11.7 Dry Distemper

The surface shall be prepared in the same manner as for synthetic washable distemper. A primer coat using approved whiting shall be applied over the prepared surface. Distemper prepared as per manufacturer's direction shall be applied and each coat shall be allowed to dry before subsequent coat is applied. The finished surface shall be free from chalking when rubbed, even, uniform and shall show no brush marks.

11.8 Plastic emulsion paint

© 2022 MECON Limited All rights reserved

The surface on which plastic paint has to be laid must be thoroughly cleaned and prepared and all defects rectified and finally prepared in the same manner as for synthetic washable distemper. The surface shall be dry and rubbed smooth by means of sand paper to the satisfaction of the Engineer. One coat primer and two coats of plastic emulsion paint are to be applied. The work is to be carried out under direct guidance and instructions from the manufacturers whose expert advise and supervision are to be made available in order to achieve the high grade finish. The painters employed for this work must be capable of producing the highest standard of workmanship required. If the finish is of doubtful nature, the contractor shall have to rectify at his own cost to the entire satisfaction of the Engineer.

11.9 Bitumen painting

Bitumen painting to concrete surface shall be done as follows:

(i) Hot application

The surface shall be cleaned of all mud etc., before painting. The honey-combs and other defects of concrete surfaces to be painted shall be rectified properly. Any projection of binding wire shall be cut to keep it 10 mm inside the concrete surface and then filled with mortar. Before application the surface shall be absolute dry.

Bitumen of standard quality as specified shall be heated to the temperature specified by the maker and then applied hot with brushes on the prepared surface. The surface shall be allowed to cool before applying the second coat.

(ii) Cold application

The surface shall be prepared in the same way as for hot application. The bitumen emulsion of approved quality shall be applied with special brushes. Where acid resistant treatment is specified such surface shall be covered with approved acid resisting coating to the satisfaction of the Engineer. Before the coating is applied, the surface shall be properly cleaned and prepared in the manner described above.

11.10 Tarring

(i) Timber surfaces in contact with earth/concrete/ plaster shall be treated with one coat of hot tar or as specified in schedule before fixing.

© 2022 MECON Limited All rights reserved

(ii) If required steel work in holdfasts and the like shall be treated as above and sanded in addition before being fixed in position.

11.11 Painting to Timber & Steel Surface

11.11.1 General

The priming coat for steel/wood work shall be applied after the surface has been prepared. After the priming coat has dried, all nails, screw holes and cracks shall be filled with putty and surface smoothened with sand paper.

All surfaces must be thoroughly dry before painting work is started and painting in exterior/exposed parts shall not be taken up in wet/humid or otherwise unfavourable weather.

All stains of paint to glasses, walls, fittings and fixtures etc. shall be cleaned thoroughly by applying required turpentine or thinner. The contractor's rate shall include all these.

11.11.2 Painting to timber

(i) Unless otherwise specified, all timber surfaces shall be treated with one priming coat, one under coat and one finishing coat. Under coat and finishing coat shall be synthetic enamel or as specified. Priming coat shall be of approved primer. In case the surface is to be polished or varnished, a priming coat as approved or specified shall be given. No primer shall be applied to wood work until it has been inspected and passed by the Engineer.

(ii) Polishing

The surface to be polished shall be prepared in the same manner as specified under painting.

(iii) French Spirit Polish

After preparation of the surface it will be well dusted and then the pores of the wood shall be filled up with a filler made of a paste of whiting in water or methylated spirit with a pigment if so required. The spirit polish shall be prepared by dissolving pure shellac in methylated spirit, @ 0.75 Kg of shellac to 5 litres of spirit, with the addition of pigment if so required.

The polish shall be applied with a pad consisting of cotton wool inside a clean white cloth. Several coats shall be applied with light sand papering from time to time and cleaning the dust before

© 2022 MECON Limited All rights reserved

applying next coat except the final coat. The final coat of the polish shall be rubbed thoroughly until the wood feels perfectly dry when touched and gives a satisfactory smooth shining.

(iv) Wax Polishing

After preparation of surface wax polish will be applied. The polish shall be prepared by heating together 2 parts of pure bees wax and boiled linseed oil each over a slow fire. When the wax is completely dissolved the mixture shall be cooled till it is just warm and one part of genuine turpentine is to be added and entire mixture shall be well stirred.

Polish shall be applied in the same manner as specified for spirit polish.

11.11.3 Painting to Steel Surface

11.11.3.1 General

All surfaces shall be thoroughly cleaned of all dirt, grease, rust and mill scale. Areas which become inaccessible after assembly shall be painted before assembly after cleaning the surfaces as described above. The surfaces shall be perfectly dry before painting.

Wherever shop primer painting is damaged, the surfaces shall be thoroughly cleaned and touched up with corresponding primer.

Site painting shall not be done in frosty or foggy weather or when humidity is such as to cause condensation on the surface to be painted.

11.11.3.2 Steel Structures

Unless otherwise specified all structures shall be painted with two coats of primer. One coat shall be applied at shop and the second coat at site. All structures after erection shall be given two coats of finishing paint and shall be of synthetic enamel of approved colour. The under coat shall have different tint to distinguish from the finishing coat.

11.11.3.3 Galvanized Iron Sheets

All plain and CGI sheets requires surface pre-treatment or use of other patented primer to ensure adhesion of paint to zinc coated surfaces. Such pre-treatment shall be as per manufacturer's specifications. Where pre-treatment is adopted one coat of primer paint of suitable quality shall be applied. Unless otherwise specified the finishing coats shall consist of an

© 2022 MECON Limited All rights reserved

under-coat of an aluminium paint having blue tint and a second coat of aluminium paint having aluminium colour.

11.11.3.4 Structures embedded

Exposed surfaces of embedded parts shall be given two coats of red lead graphite primer at shop and finished with two coats of anti-corrosive paint at site after embedment. Type of paint and procedure of painting shall be as per manufacturer's specification. Surfaces to be field welded shall have no paint applied within 100 mm of the welding zone.

12.0 INTERNAL WATER SUPPPLY PLUMBING, DRAINAGE & SANITATION

12.1 Scope of Work

The work comprises supply, laying testing, commissioning etc. of water supply, plumbing, drainage & sanitation.

The work includes the following activities connected with the job:

i) Supply and delivery of all required pipes and other materials.

ii) Earthwork in excavation for trenches, pits/chambers/manholes etc.

iii) Civil works connected with the laying/erection of pipe lines such as making holes in the wall etc. and repairing them after pipe erection, construction of pipe supports, valve chambers, manholes, bedding and covering of pipe laying wherever required.

iv) Laying and jointing of pipe lines as specified in this chapter

v) Testing of pipe lines after laying as per standard tests specified in this chapter.

vi) Back filling of trenches after successful and satisfactory testing.

vii) Disinfection of the complete piping system in the case of water supply.

viii) Commissioning of entire network.

ix) Safe custody of the pipes/materials/equipment/work and other obligation stated elsewhere in the specification.

x) Any other activities which are not mentioned above but essential and required.

© 2022 MECON Limited All rights reserved

12.1.1 Materials

The materials shall conform to Part-I of this series.

12.2 Water Supply & Plumbing

12.2.1 General

12.2.1.1 General Requirements

The Contractor shall lay all the pipes and fittings in the best workman like manner by skilled workmen and licensed plumbers in conformity with the regulations and requirements of the local appropriate authorities and to the satisfaction of the Engineer. Unless otherwise specified water supply works in buildings shall be carried out in accordance with IS:2065 "Code of Practice for Water Supply in Buildings" & IS:2064 "Code of practice for selection, installation and maintenance of sanitary appliances".

12.2.2 Installation

All works like earth work, masonry, concrete, steel work, cutting holes, chases in brick, concrete & RCC works, cutting of roads, repairs and rectifications associated directly with the installation of water supply system shall come under the scope of the contractor and shall be governed by the specification of the relevant chapter.

12.2.3 Laying

Before lowering down for laying in the trenches, the pipes shall be checked against crack by means of light hammering and for any other damage. All fixing shall be carefully aligned and spaced at a distance from the main structure to give reasonable all round access for maintenance and inspection and laid true to line plumb and level. Any deviation shall need approval of the Engineer. Meticulous care shall be taken to avoid chances of airlock and water hammer.

Pipes shall be laid on continuous unyielding surface holder or on reliable supports at least one near each joint and spacings as directed by the Engineer. The support must be strong, neat and shall have provisions for securing the pipes in every direction and easy maintenance. If situation requires, pipes shall be encased or concealed in masonry or concrete if shown on drawing or directed by the Engineer. Pipes embedded in floors and wall shall be securely bound so as not to allow any movement due to expansion and contraction. adequate width shall be provided to lay the pipes as per standard practice.

© 2022 MECON Limited All rights reserved

Excavation below the required level is not permitted. The contractor shall make good any excess excavation as directed by the Engineer.

Soft spots in the bottom of beds for pipe lines in rock shall be leveled with sand or soft soil or concrete as approved by the Engineer and the thickness of the layer shall not be less than 100mm.

12.2.4 Excavation for pipe lines in trenches

Excavation shall comply with chapter 2. The sides of pits and trenches shall be adequately supported at all times, except where otherwise directed by the Engineer.

12.2.5 Underground piping in and around building

Underground piping shall be laid at such a depth that it is not likely to be damaged by traffic and other loads and frost, where applicable, and as shown in the drawing and instructed by the Engineer. The thrust blocks shall be provided wherever required.

The size and depth of the trench shall be as approved by the Engineer. Backfilling in trenches shall be done with selected fine earth, unless otherwise permitted, in 150mm layers and carefully consolidated and well treated so that it does not set as a drainage channel. Special care shall be taken while filling in the vicinity of the pipe to avoid damages. Before backfilling the laid pipe shall be fully tested and approved.

12.2.6 Concealed piping

Where desired by the Engineer or shown on the drawings the pipes shall be concealed in masonry or concrete of the adjoining structure by making chases in walls/floors and these shall be secured by hooks and the chases filled with concrete 1:2:4 (1 cement, 2 sand and 4 aggregate). The contractor will rectify, if required the chases, openings and pipes, supplement and make good after laying and testing of the concealed pipelines.

12.2.7 GI.Piping

12.2.7.1 The pipes shall be fixed in longest lengths possible with all necessary bends, tees, couplings, reducing ockets, short piece, jamnut and tees etc. in perfect straight lines both vertically and horizontally.

12.2.7.2 All exposed GI pipes shall be fixed at least 15mm clear of wall face with holder bat clamps at suitable places not exceeding (2.5 metres) centre to centre. Where the pipes are laid in chases in walls as shown in the drawing, these shall be secured to walls by hooks. Chases in walls and floors shall be

© 2022 MECON Limited All rights reserved

filled in with cement concrete 1:2:4. Where the pipes are to be run underground these may be laid at least 60 cm below ground level.

12.2.7.3 The joints of pipes and fittings shall be sealed with red lead paint and fine spun yarn. Joints must be perfectly water tight when put under maximum test pressure.

12.2.7.4 Unless otherwise specified the exposed portion of pipes and fittings shall be given two coats of approved synthetic enamel paint over a coat of approved priming. Pipes laid underground or concealed in walls/floors shall be treated with two coats of bituminous paint.

12.2.8 Jointing of pipes

The interior of all pipes and joints shall be cleaned before jointing commences. Jointing of pipes shall be done in such a manner as to render them completely leakproof and durable. Instruction of the manufacturer shall be followed unless desired otherwise by the Engineer. However, the general norms and recommended practices for different types of pipes are given below for guidance:

(a) Cast Iron

i) Spigot and socket joints:

Interior surface of bells and exterior surface of smooth ends of pipes shall be cleared of redundant insulating cover and other foreign materials particularly of oil, burning off materials from bells and smooth pipe ends. Sharp rises on interior bell surface shall be smoothed out.

Bells should be lined up, in compliance with direction of pipe. Laying work shall be started from lower points.

ii) Lead and Flanged Joint:

Lead joints shall be made as per Sl. 15.4.6.1 and flanged joints as per Sl. 15.4.6.2 of chapter 15.

b) Steel Pipes

Plain ended steel pipes may be jointed by welding. Screwed and socketed joints shall be carefully tightened. Care shall be taken to remove burring from the ends of the pipes. Jointing compound, if used, shall be lead free and approved by the Engineer.

© 2022 MECON Limited All rights reserved

c) G.I Pipes

Threads shall be cut with, sharp tools, and before jointing all scale shall be removed from pipes by suitable means. The screw threads of the pipe shall be cleaned out and the joint made by screwing the fitting after treating the threads with approved pipe jointing compound. Once a joint has been screwed up it shall not be backed off unless threads are recleaned and new compound applied.

d) Asbestos cement pipes

Socket and spigot ended pipes shall be jointed by caulking with tarred gaskets and grouted with 1:3 cement sand mortar.

12.2.9 Precautions

a) All water supply pipes shall be so laid and so fixed and maintained as to be and remain completely water tight.

b) During installation open ends of each pipe shall be protected by suitable covers or plugs so that the ends, thread, sockets or spigot are not damaged and no foreign materials can make its way into the pipe line.

c) Due care should be taken to ensure that there shall be no cross connection whatsoever between a pipe or fitting for conveying or containing wholesome water and a pipe or fitting containing impure water or water liable to contamination or of an uncertain quality of water which has been used for any other purposes.

d) Fittings and fixtures liable to be stolen shall be fitted and fixed just before testing and handing over.

12.2.10 Painting

When mentioned in the schedule of item underground steel and cast iron pipes shall be treated with 2 coats of anticorrosive bituminous paint on the outside surface after cleaning the surface from soil, dust, moisture, rust, scales soot etc. When painting is to be done for pipes above ground, G.I. pipes shall be given a coat of zinc chromate primer, C.I. & M.S. pipes shall be given one coat of red lead or zinc chromate primer over which at least 2 coats of paint of best quality and manufacture as approved by the Engineer shall be provided or as specified in the schedule of item.

© 2022 MECON Limited All rights reserved

12.2.11 Ferrule and stop cock box with chamber

Square cast iron surface box 15 cm square and 22.5 cm deep weighing not less than 4.54 Kg with hinged lid shall be provided in masonry chamber. Top of box shall be made flush with the finished level of the chamber. The chamber 25cm x 25cm inside shall be with half brick wall in cement mortar 1:4 over a cement bed concrete of 75mm thick in proportion 1:4:8 with stone chips. The inside wall faces shall be plastered with 12mm thick cement mortar 1:4 finished smooth with a floating coat of neat cement.

The exposed surfaces of cast iron box and cover shall be treated with two coats of bituminous paint.

12.2.12 Inspection, Testing and Acceptance

12.2.12.1 Pipes, fittings and fixtures before laying

All pipes, fittings and appliances shall be inspected, before delivery at the site to see whether they conform to accepted standards. The pipes and fittings shall be

inspected on site before laying and shall be sounded to disclose cracks. Any defective items shall be clearly marked as rejected and forthwith removed from the site.

12.2.12.2 Testing of pipes after laying

General

a) The contractor shall ensure the safety of the pipe work under test and provide all necessary stoppers, testing apparatus etc. that are required for testing.

b) The contractor shall be responsible for any damage done to pipe work and ancillary work while testing and shall replace any pipe or fitting which does not satisfactorily withstand the test.

c) The contractor shall give written notice of the times at which tests are to take place. On completion of each test two copies of the complete records shall be given to the Engineer.

d) The work will not be considered complete until the tests are found satisfactory and a certificate issued by the Engineer.

After laying and jointing, the main shall be slowly and carefully charged with water, so that all air is expelled from the main by providing a 25mm inlet with a stop-cock, allowed to stand full of water for a few days if time

© 2022 MECON Limited All rights reserved

permits and then tested under pressure. The test pressure shall be 6Kg/cm2 or double the maximum working pressure, whichever is greater The pressure shall be applied by means of a manually operated test pump, or in the case of long mains or a large diameter, by a power driven test pump, provided that pump is not left unattended. In either case due precaution shall be taken to ensure that the required test pressure is not exceeded. Pressure gauges shall be accurate and shall preferably have been re-calibrated before the test. The pump having been stopped, the test pressure shall maintain itself without measurable loss for at least five minutes. The end of the main shall be closed by fitting a water-tight expanding plug and the plug shall be secured by struts to resist the end thrust of the water pressure in the mains.

12.2.12.3 Testing of service pipes and fittings

The service pipes shall be slowly and carefully charged with water allowing all air to escape avoiding all shock or water hammer. The service pipe shall then be inspected under working conditions of pressure and flow. When all draw-off taps are closed, the service pipes shall be absolutely watertight. All pipings, fittings and appliance shall be checked for satisfactory support and protection from damage, corrosion and frost.

12.2.13 Storage Tank

12.2.13.1 Pressed steel tank

Pressed steel water storage tanks shall be of nominal size and capacity as mentioned in the Schedule of Item and fabricated with all flanges external / internal or bottom flange internal and side flanges external, as shown on drawings or schedule of items. Inlet, overflow, vent pipes and manholes shall be arranged and provided as shown in drawing or mentioned in the schedule. Unless otherwise specified, the outlet pipe shall be 50mm above the bottom of the tank and there shall be 150mm free board at the top of the tank. The fabricator shall supply 5 prints of fabrication drawing to the Engineer for prior approval showing thickness of plates, method of jointing the plates. All supports, stays, gussets etc. Pads, cleats etc., required for supporting the tanks shall also be supplied by the manufacturer.

All tanks shall be supplied with mosquito-proof top with manhole not less than 450mm diameter. Tanks deeper than 1.00 Metre shall be provided with M.S. internal access ladder adjacent to the manhole. Meter level indicator shall be provided if asked for. Two coats of anticorrosive paint over a suitable primer shall be applied to both internal a external surface of tanks. The paint shall be so selected as not to impart any taste or odour of water and be of lead free composition.

© 2022 MECON Limited All rights reserved

12.2.13.2 G.I. Water Tank

G.I. water tanks shall be procured from a reputed manufacturer. The design shall be good enough to withstand the loads safely. Galvanized iron water storage tank shall be made of minimum 16 gauge galvanized iron sheet. Unless otherwise specified plain sheets shall be fixed at the corner to angle iron frames by means of 6 mm rivets at 40 mm pitch for tanks upto 1000 litres capacity and 8 mm rivets at 35 mm pitch for tanks above 1000 litres capacity. Tanks above 1000 litres shall have 20 mm dia. galvanised iron stays, one fixed to angle framing at topand two in the body of the tank for extra strength. Holes for rivetting shall be drilled and not punched. Lead shall be applied to the joints before rivetting.

Tanks shall have 400 mm dia. holes at the top with hinged covers. The covers shall be made of galvanised iron sheet with angle iron frame. The cover shall be just loose but close fitting to keep out dust and mosquito and will not be airtight. It shall be complete with lockable arrangement.

Tanks unless otherwise specified shall be provided with rising main inlets of 40 mm dia. galvanised iron pipe or as shown on drawing and 40 mm dia. G.I. overflow pipe and 25 mm washout with plug. If specified the rising main shall be connected to the tank with a ball valve near the top which disconnects the supply when tank is full up to the point of overflowing.

The ball valve shall permit the entry of water when the tank is empty and disconnect the supply when the tank is full. It consists of a hollow floating ball made of copper, plastic or hard rubber, 110 mm in diameter attached to an arm which is so pivoted that the end near the pivot close the orifice of the main when the ball is raised to the required height of water in the tank and opens the main as soon as the ball drops with the fall of water level as it is drawn off through the distribution. The ball valve shall be fixed to the tank in such a position that the body of the ball valve submerge when the tank is full upto the water line. The ball valve shall be so adjusted as to limit the level of the water in the tank below the lip of the over-flow pipe, and above the maximum water filled level shall be as per the standard norms for GI water tank.

12.2.13.3 Water reservoirs made of concrete or masonry shall be governed by the specification in the relevant chapter. It shall have, inlet, outlet, overflow and wash out with plug and a top MS/CI cover as per schedule of items and drawings.

12.3 Drainage and Sanitation (Internal)

© 2022 MECON Limited All rights reserved

12.3.1 Scope

This section covers the layout and construction of drains for waste water, surface water and sewage together with all fittings and fixtures inclusive of ancillary works, such as connectins, manholes and inspection chambers used within and around the building and the connection to a public sewer upto treatment work, septic tank and soak pit. All sewerage and drainage works shall be executed in accordance with specifications given for different works. All sewerage and drainage works shall be executed by a licensed plumbing supervisor or a licensed plumber and in accordance with IS: 1742 "Code of Practice for Building Drainage" unless otherwise specified.

12.3.1.1 Installation

All pipe lines, locations of fittings and fixtures, etc. shall be as per drawings or as directed by the Engineer. Correctness of lines, plumbs, orientation, symmetry and levels shall be strictly ensured. All items shall be fully secured against movement in any direction and shall be located so as to allow easy maintenance.

All pipelines, fittings and fixtures shall be installed leakproof; when the works under scope of this specification are linked up with works executed by others, the connections shall be such as to prevent any splashing or spilling or emission of foul odour and gasses.

12.3.2 Rainwater Downcomers

Rainwater downcomers shall be standard cast iron or asbestos cement pipes. In case where specifically desired, M.S. pipes may also be used. M.S. pipes shall be painted outside with two coats of anticorrosive paint over a coat of primer. Rain water downcomers shall run along and be secured to walls columns, etc. Where desired by the Engineer these may have to be installed in chases cut in the structure. All pipes shall be well secured and supported by adequately strong brackets. The brackets may be wrought iron clamp type, split ring type or perforated strap iron type as approved by the Engineer. For vertical runs each pipe shall hang freely on its brackets fixed just below the socket. Suitable spacer blocks shall be provided against the vertical surface to which the pipe is fixed. Roof and floor drains and yard gullies shall be installed, if required, by cutting into the structure and grouted with 1:2:4 cement concrete. All gutters shall be provided with removable gratings. All horizontal pipes shall have a minimum fall of 1 in 100.

© 2022 MECON Limited All rights reserved

12.3.3 Gutter

The gutters shall be made of G.I. or A.C. Gutters shall be supplied by reputed specialised firms. Each section shall be sufficiently rigid, edges and corners straight and the slopes perfectly uniform. GI gutters shall have the edges strengthened by suitable means. The joints may be made by rivetting, bolting or soldering.

Unless specified otherwise the gutters shall have a minimum fall of 1 in 120. Adequate number of string supports shall be provided so that there is no deflection even when the gutter is full. Each joint must have a support. Unless otherwise specified the supports shall be fabricated of MS brackets. All junctions shall be thoroughly watertight. The joints may be made by rivetting, bolting or soldering. All joints between successive lengths of gutters shall have an overlap of at least 5 cm. The drop in the overlap shall always be in the direction of the fall of the gutter. Ends of gutters shall be closed watertight. Junction with rainwater downcomers shall be made fully watertight and secured.

12.3.4 Soil and Drainage Pipes

12.3.4.1 Gradients

If not specified the minimum gradients of soil and drainage pipe line shall be as follows:

100 mm nominal dia	:	1 in 35
150 mm nominal dia	:	1 in 65
230 mm nominal dia	:	1 in 120
300 mm nominal dia	:	1 in 200

12.3.4.2 Relation with water supply pipe lines

Unless specifically cleared by the Engineer, under no circumstances shall drainage and soil pipes be allowed to come close to water supply pipelines.

12.3.4.3 Laying

Each separate pipe shall be individually set for lines and levels. Where lengths of sewer or drain pipes are laid in trench, properly painted sight rails shall be fixed across the trench at a height, equal to length of the boning rod to be used, above the required invert level of the drain or sewer at the point where the sight is fixed. More sight rails shall be required at manholes, change of gradient and intermediate positions if the distance for

© 2022 MECON Limited All rights reserved

sighting is more than 16 m apart. The excavation shall be boned in at least one in every 2 m. The foot of the boning rod shall be set on a block of wood of the exact thickness of the wall of the pipe. Each pipe shall be separately and accurately boned between sight rails.

12.3.4.4 Support and protection on pipelines

All pipes shall be laid with sockets leading uphill. Preferably the pipe shall rest on solid and even foundations for the full length of the barrel. However, the pipe manufacturer's instruction as approved by the Engineer shall be followed in the matter of support and jointings.

Where pipes are not bedded on concrete, the bed shall be left slightly high and carefully placed so that the pipe barrels rest on undisturbed ground. If anywhere the excavation has been carried too low packing shall be done in concrete. Where laid on rock or very hard ground which cannot be easily excavated to a smooth surface, the pipes shall be laid on a cradle of sand or gravel as desired by the Engineer. PVC or similar pipes shall be laid directly on stable soil and packed with selected soil.

The minimum support and protection for glazed stoneware pipes shall be as follows:

a) When cover is less than 1 metre and where pipes are unavoidably exposed above ground surface, the pipes shall be completely encased surrounded with concrete as per IS:4127.

b) Where pipes are laid on soft soil with the maximum water table laying at the invert of the pipes, the sewer shall be bedded on concrete 1:4:8 mm with 20mm down aggregates as per IS:4127.

c) Where the pipes have to be laid on soft soil with the maximum water table rising above the invert of the pipe, but below the top of the barrel, the pipe sewer shall be haunched with concrete 1:4:8 mm with 20mm down aggregates as per IS:4127.

d) Where maximum water table is likely to rise above the top of the barrel the pipe sewers shall be completely encased/surrounded with 1:4:8 concrete with 20mm down aggregate as per IS:4127.

Vitrified clay pipes shall be laid on a bed of 150mm thick cement concrete (1:3:6) nominal mix by volume.

Cast iron pipes and concrete pipes may be supported on suitable concrete or brick support, where specified. The support shall be unyielding and strong enough. At least one support shall be located close to ends. Spacing of

© 2022 MECON Limited All rights reserved

intermediate supports shall be as decided by the Engineer. Pipes shall be secured to the supports by approved means.

Anchoring of pipes where necessary shall be achieved by suitable concrete encasing designed for the expected thrust.

12.3.4.5 Entry into structures

For entry of the pipes lines into any building or structure suitable conduits under the structure or sleeves shall be used. The conduits and sleeves shall be such as to allow easy repairs and replacement of the pipes. Where openings or chases are required to be made in the structure for entry of pipe lines, locations and sizes shall be marked and checked by the Engineer. After laying of the pipeline, the openings and chases shall be mended.

12.3.4.6 Traps and Ventilating pipes

a) Pipes carrying the sewage from water closets and waste water and overflow water from baths, wash basins, sinks shall be trapped immediately beneath such fixtures. Traps shall have minimum water seal of 50mm and shall be ventilated whenever such ventilation is necessary to maintain water seal of the trap. Ventilating pipes shall be carried up vertically from the drain to a height of at least 600mm above the outer covering of the roof top of the building or as shown on drawings. All vertical ventilating, anti-siphonage and similar pipe shall be covered on top with a cowl. The cowl shall be made of C.I. unless desired otherwise by the Engineer.

Connecting to existing sewer lines shall be through a manhole.

b) Sand Cast Iron Spigot and Socket pipe and fittings

All soil waste and vent pipes and fittings used in the work shall be cast iron and shall conform to IS:1729. The pipes shall have spigot and socket ends, with bead on spigot end and shall be with or without ears. The pipes shall be free from cracks and other flaws. The interior. of the pipes and fittings shall be clean and smooth and painted inside and outside with Dr. Angus Smith's solution or other approved anticorrosive paint. Fittings shall include bends, offsets, branches of various types, junctions etc. as required for the work which shall be provided according to drawings and directions of the engineer.

The fittings shall be provided with access doors where so specified or directed by the engineer. The access door fittings shall be of proper design so as not to form cavities in which the filth may accumulate. Doors shall be provided with 3mm thick rubber

© 2022 MECON Limited All rights reserved

insertion packing, and when closed and bolted they shall be watertight. The access doors shall have MS studs and bolts or screws or bolts and nuts.

Fixing

The pipes and fittings shall be fixed to wall by means of MS holder bats clamp of approved type and steel bolts or by pipe nails, bobbins etc. as the case may be, keeping the pipe clear from the finished surface of the wall. The holder bat nails shall be fixed to the wall in wooden block. The soil pipe shall be supported at the foot upon a bed of cement concrete of proportion 1:3:6 and firmly attached to the wall.

The pipes shall be laid truly vertically or along the line as shown in the drawing. Connection between main pipe and branch pipe shall be made by using branches and bends with access door for cleaning.

All vertical soil waste, ventilating and anti-siphonage pipes shall be carried up above the roof and provided with suitable C.I. cowl on top.

Pipes outside the building shall be laid underground for which trenches shall be excavated as required for the work. The trenches shall be back-filled with excavated material after the drainage system has been tested and passed.

Jointing (Lead Caulked Joint)

Unless otherwise specified, the pipes and fittings shall be jointed with lead joints as described below:

The annular space between the socket and spigot will be first well packed in with tarred gasket or hemp yarn leaving 25mm from the lip of the socket for the lead. The joint may be leaded by using proper leading rings or if they are not available by wrapping a ring of hemp rope covered with clay round the pipe at the end of the socket, leaving a hole through which lead shall be poured in (for pipes with sockets facing a upwards 15mm high small clay band on socket edge may be used).

The lead shall be rendered thoroughly fluid and each joint filled in one pouring. Before caulking, the projecting lead shall be removed by flat chisels and then the joint caulked round with proper caulking tools and a hammer of 2 to 3 pounds in weight in such manner as to make the joint quite sound. After being well set up the joint is to be left flush neat and even with the socket.

© 2022 MECON Limited All rights reserved

Lead for caulking shall conform to IS:782.

Painting

All the exposed CI pipes and fittings shall be painted to match the colour of the surroundings. The surface of the pipes and fittings to be painted shall be cleaned thoroughly and painted 2 coats with approved paint over and including 1 coat of approved primer. Pipes laid underground shall be painted with 2 coats of anti-corrosive paint.

12.3.4.7 Cutting of pipes

Manufacturer's instructions shall be followed for cutting of pipes where necessary. Suitable and approved tools shall be used for the cutting so as to leave surface clean and square to the axis of the pipe.

12.3.4.8 Jointing

Jointing of laid pipes shall be so planned as to avoid completely any movement or strain to the joints already made. If any joint is suspected to be damaged it shall be opened out and redone.

All joints between pipes, pipes and fittings and man- holes shall be gas tight when above ground and watertight when underground. Method of jointing shall be as per instructions of the manufacturer and as approved by the Engineer. However, in the absence of any instruction available from the manufacturer the methods as detailed hereunder shall be used.

(a) Sand Cast Iron Pipes

Jointing of cast iron pipe shall be done as described in Sl. No. 12.3.4.7(b).

(b) Concrete pipes

i) Spigot & Socket Joint

The opening of the joint shall be filled with stiff mixture of cement mortar 1:2 (1 cement: 2 fine sand) which shall be rammed with caulking tool.

ii) Collar Joint

Joint shall be done by slipping the collar over and clear of the end of the pipe. The recess at the end of the pipe shall be filled with jute braiding dipped in hot bitumen. Care

© 2022 MECON Limited All rights reserved

shall be taken that no off-set of the jute braiding shall be visible either outside or inside the pipe. The collar shall be then set up over the joint covering equally both the pipes and leaving an even caulking space all round. cement and sand mortar (1:1.5) shall then be well punched or pressed home with a caulking tool.

(c) Glazed stoneware pipes

Tarred gasket or hemp yarn soaked in thick cement slurry shall first be placed round the spigot of each pipe and the spigot shall then be placed into the socket of the pipe previously laid. The pipe shall then be adjusted and fixed in the correct position and the gasket caulked tightly so as not to fill more than 1/4 of the socket. The reminder of the socket shall be filled with a stiff mixture of cement mortar of 1:1 proportion. When the socket is filled, a fillet shall be formed round the joint with a trowel, forming an angle of 45 degree with the barrel of the pipe. The newly made joints shall be protected, until set, from sun and rain and shall be covered with damp sacking or other suitable materials.

12.3.5 Trenches and other excavations

Excavation shall be carried out according to chapter-2, Earthwork.

Width of the trench at the bottom shall be such as to provide 200 mm clearance on either side of the pipe for facility of laying and jointing.

Excavated material shall be stacked sufficiently away from the edge of the trench. The spoil bank shall not be allowed to endanger the stability of the excavation. Spoil may be carted away and used for filling the trench behind the work. Turf, top soil or other surface material shall be set aside, turf being carefully rolled and stacked for use in reinstatement. All excavations shall be properly timbered, where necessary. Efficient arrangements for dewatering during excavation and keeping it dry till back filling shall be made to the satisfaction of the Engineer. Sumps for dewatering shall be located away from the pipe layout.

Where the excavation proceeds through roads necessary permissions shall be secured by the contractor from the appropriate authorities.

Special care shall be taken not to damage underground services, cables etc. These when exposed shall be kept adequately supported till the trench is backfilled.

© 2022 MECON Limited All rights reserved

The backfilling shall be done only after the pipeline has been tested and approved by the Engineer. Special care shall be taken for packing with selected material in areas 300 mm around the pipe. At least 300 mm over the pipe shall also be filled with soft earth or sand.

Consolidation shall be done in 150 mm layers. The surface water shall be prevented from getting into the filled up trench. Traffic shall not be inconvenienced by heaping up unduly the backfilling material to compensate future settlement. All settlements shall be made good regularly to minimise inconvenience or traffic where applicable.

12.3.6 Installation of fittings & fixtures

12.3.6.1 General

All fittings & fixtures shall be laid out as per drawings and in proper line, level and shall be firmly secured to floors with screws and ditto fix and to walls with wall plugs and screws. Unless otherwise specified only C.P. Brass screws shall be used for fixing sanitary fittings to wall plugs and floors.

12.3.6.2 European pattern WC

Water closet shall be fixed with floor by means of 75 mm long, 6.5 mm diameter counter sunk bolts & nuts embedded in floor using rubber or fibre washers so as not to allow any lateral displacement.

12.3.6.3 Indian Patttern W.C.

The water closet pan shall be sunk into the floor and embedded in a cushion of average 150 mm cement concrete 1:4:8 (1 cement, 4 sand and 8 broken brick ballast of 40 mm size). The concrete shall be left about 125 mm below the top level of the pan so as to allow for flooring and its bed concrete. The joint between the pan and trap shall be made with C.M. 1:1 and joint between trap and CI soil and waste pipe to be made with lead. All the joints shall be leak proof. The WC floor shall slope towards the pan. The foot rest shall be set in cement mortar 1:3 (1 cement: 3 sand).

The cast iron cistern, brackets and flush pipe etc. shall be painted with two coats of approved paint, over and including a coat of approved priming.

12.3.6.4 Wash basin

Wash basin shall be fixed to C.I./R.S. brackets fixed in cement mortar 1:3 (1 cement:3 sand). The brackets shall be fixed to approved wooden wall

© 2022 MECON Limited All rights reserved

plugs with screws. C.P. brass trap and union shall be connected to waste pipe if specified.

12.3.6.5 Urinals

The urinal shall be fixed to the walls with C.P. Brass screws fixed to wooden wall plugs. Urinal partitions shall be fixed to walls by making chases in walls and grouting the same in 1:2:4 cement concrete.

12.3.6.6 Mirror

Fixed type mirror shall be screwed to wall plugs with CP brass screws and shall have a backing of asbestos or similar material as specification in the item.

Swivel type mirror shall be fixed with C.P. brackets which shall be fixed to wall plugs with CP brass screws

12.3.6.7 Soap tray / toilet paper holder

This shall be of flush mounting design and shall be housed in walls by making chases and grouting the same in cement mortar 1:3 unless otherwise specified. All other fittings shall be fixed with screw or as per manufacturer's specification

12.3.6.8 Towel rail & Toilet glass-shelf unit

This shall be fixed with CP Brass screws which shall be fixed to wall plugs.

12.3.6.9 Gully trap

This shall be fixed on 100 mm thick bed and encasement of size 600mm x 600mm x full height of trap shall be provided with cement concrete of proportion 1:4:8 with 40mm stone aggregate. The gully outlet shall be jointed to the branch drain as specified or directed by the Engineer.

12.3.6.10 Masonry chamber for Gully Trap

After fixing and testing gully and branch drain, a brick masonry chamber 300mm x 300mm x 450mm deep or as specified (internal dimensions) in cement mortar 1:4 (1 cement and 4 sand) shall be built with half brick thick wall round the gully trap from the top of the concrete. The internal faces of the chamber shall be finished smooth with 15 mm thick cement plaster (1:4) and neat cement finish. Brick wall exposed to outside shall be finished with 12 mm thick cement plaster 1:4. P.C.C. (1:2:4) band 100 mm thick shall be provided over the brick work with suitable grooves for

© 2022 MECON Limited All rights reserved

accommodating R.C.C. cover to be supplied as per drawing and made water tight by providing suitable beading in the band.

12.3.6.11 High level flushing cistern - (fixing flush pipe & cistern)

The W.C. pan shall be connected to the cistern by G.I. 32mm dia or 40mm (O.D) high density polythene flush pipe with holder clamp and brass coupling.

12.3.6.12 Low level flushing cistern

Unless otherwise specified, it shall be connected to the closet by means of 40mm dia white porcelain enameled flush bend using rubber adaptor joints.

12.3.7 Septic tank and effluent disposal

12.3.7.1 Septic tank

Septic tank shall consist of the tank itself with inlet and outlets therefrom complete with all necessary earthwork and backfilling. The details of septic tank shall be as shown on drawing. This item shall also include ventilating pipe of at least 100mm dia whose top shall be provided with a suitable mosquito proof wire mesh and cowl. Generally ventilating pipe shall extend to a height of about 2 metres when the septic tank is at least 15 metres away from the nearest building and to a height of 2 metres above the top of building when it is located closer than 15 metres. Ventilating pipes can be connected to the normal soil ventilating system of the building where allowed.

12.3.7.2 Effluent disposal

The effluent from the septic tank shall be disposed by allowing it into an open channel or a body of water if the concerned authority approves or into a soak pit for absorption by soil or shall be allowed to be absorbed by soil through open jointed S.W pipes laid in a trench filled with broken bricks.

12.3.7.3 Soak Pit

Shall be complete as shown on drawing. In absence of a detailed drawing it shall consist of a 900mm dia pit 1000mm in depth below the invert level of the inlet pipe. The pit shall be lined with stone, brick or concrete blocks with dry open joints backed with at least 75 mm of clean coarse aggregate. The lining above the inlet level shall be set in cement mortar (1:6). The pit shall be filled with brick bats. Inlet pipe shall be taken down to a depth of 900mm from the top as an anti-mosquito measure.

© 2022 MECON Limited All rights reserved

12.3.7.4 Open jointed S.W pipes

Minimum dia of the S.W pipes shall be 200mm nominal. The trench for laying the pipes shall be minimum 600x600mm. The joints of the pipes shall be left unsealed.

12.3.7.5 Commissioning septic tank

After the septic tank has been proved water-tight and the sewage system is checked, the tank shall be filled with water to its outlet level before the sewage is let into the tank. It shall be seeded with well digested sludge obtained from septic tank or sludge digestion tank. In the absence of digested sludge a small quantity of decaying organic matter such as digested cow dung may be introduced.

12.3.8 Manhole/Inspection chambers

Necessary excavation as required for the manhole shall be done true to dimensions and levels as shown in the drawing. The manhole chamber shall be built with brick work in C.M. 1:4 with minimum one brick thick on a base of 100mm thick cement concrete 1:4:8 with 40mm down aggregate or as specified. The concrete bed shall extend beyond the external face of brick work on all sides by at least 75mm . The thickness of wall shall be as indicated. The work shall be carefully built in English bond, the jointing faces of each brick being wall buttered with cement mortar before laying so as to ensure a full joint.

The inside of the walls shall be plastered with 15mm thick cement mortar 1:4 and finished with a floating coat of neat cement and outside shall be plastered with 12mm thick C.M. 1:4.

The channels and benching shall be done in cement concrete 1:2:4 with 20mm down stone aggregate and finished with 12mm thick cement plaster in C.M. 1:3. The channels shall be semicircular in the bottom half and of diameter equal to the sewer. Above the horizontal diameter the top edge shall be suitably rounded off. The Branch channels shall also be similarly constructed with respect to benching but at their junction with the main channel an appropriate fall suitably rounded off in the direction of flow of the main channel shall be given. The benching at the sides shall be carried up in a slope of 1 in 3.

All angles shall be rounded to 75mm radius with cement mortar 1:4 and shall be rendered smooth. The internal surfaces shall have a hard impervious finish obtained by using a steel trowel.

© 2022 MECON Limited All rights reserved

The manhole chamber shall be covered on top with RCC (1:2:4) slab with necessary reinforcement as per drawings. Unless otherwise specified circular type light duty M.H. cover with single seal weighting 25 kg. will be provided in each RCC cover.

12.3.9 Testing and acceptance

12.3.9.1 Inspection before installation

All pipes, fittings and fixtures shall be inspected, before delivery at the site to see whether they conform to accepted standards. The pipes shall again be inspected on site before laying by sounding to disclose cracks. All defective items shall be clearly marked and forthwith removed from the site.

12.3.9.2 Testing of pipelines

Comprehensive tests of all pipe lines shall be made by simulating conditions of use. The method of actual test shall be decided by the Engineer. All test data shall be recorded and submitted to the Engineer for review and instruction. The Engineer's discretion regarding tolerance shall be final.

General guidance for the tests are given below:

12.3.9.3 Smoke Test

Soil, waste, vent and all other pipes, when above ground, shall be tested for gas tightness by a smoke test conducted under a pressure of 25mm water gauge and maintained for 15 minutes after all trap seals have been filled with water. The smoke is produced by burning oily waste or tar paper or similar material in the combustion chamber of a smoke machine. Chemical smokes are not satisfactory.

12.3.9.4 Water Test

For pipes other than cast iron Glazed ware and concrete pipes shall be subjected to a test pressure of at least 1.5m head of water at the highest point of the section under tests. The tolerance figure of two litres per centimetre of diameter per kilometre may be allowed during a period of 10 (ten) minutes. The test shall be carried out by suitably plugging the low end of the drain and the end of connections, if any, and filling the system with water. A knuckle bend shall be temporarily jointed in at the top end and a sufficient length of the vertical pipe jointed to it so as to provide the required test head or the top end may be plugged with a connection to a hose ending in funnel which could be raised or lowered till required head is obtained and fixed suitably for observation.

© 2022 MECON Limited All rights reserved

Subsidence of test water may be due to one or more of the following causes:

a) Absorption by pipes and joints.

b) Sweating of pipes or joints

c) Leakage at joints or from defective pipes

d) Trapped air

Allowance shall be made for (a) by adding water until absorption has ceased and after which the test proper should commence. Any leakage and the defective part of the work shall be cut and made good.

12.3.9.5 For cast iron pipes

Cast iron sewers and drains shall be tested as for glazedware and concrete pipes. The drain plug shall be suitably strutted to prevent their being forced out of the pipe during the test.

12.3.9.5.1 For straightness

i) By inserting at the high end of the sewer or drain a smooth ball of a diameter 13mm less than the pipe bore. In the absence of obstruction, such as yarn or mortar projecting through the joints, the ball will roll down the invert of the pipe and emerge at the lower end and;

ii) By means of a mirror at one end of the line and lamp at the other. If the pipe line is straight, the full circle of light may be observed. The mirror will also indicate obstruction in the barrel if the pipeline is not straight.

12.3.9.6 Testing septic tank

The septic tank shall be tested for water tightness. It shall be filled up with water and allowed to soak for 24 hours. Then, it shall be topped up and allowed to stand again for 24 hours and loss of level recorded. The fall shall not be more than 15mm.

12.3.9.7 Fixtures etc.

All fixtures and fittings shall be connected by watertight joints. No dripping shall be accepted.

13.0 EXTERNAL SEWERAGE & DRAINAGE

13.1 Scope of Work

© 2022 MECON Limited All rights reserved

The work comprises supply, laying, testing, commissioning etc., of sewerage & drainage network as specified.
The work includes the following activities connected with the job.

i) Supply and delivery of all required pipes and other materials including erection.

ii) Earth work in excavation for trenches and pits/ manholes.

iii) Civil works connected with the laying/erection of pipe lines such as making holes in the walls etc., and repairing them after pipe erection, construction of pipe supports, brick / concrete manholes, preparation of concrete bedding and covering for pipe laying wherever required etc.

iv) Laying and jointing of the pipelines as specified in this chapter

v) Testing of the pipelines after laying as per standard tests as specified in this chapter.

vi) Back filling of the trenches after successful and satisfactory completion of tests for the pipeline laid.

vii) Cleaning, painting/coating and wrapping etc of pipes and fittings etc.

viii) Commissioning of entire network laid.

ix) Safe custody of pipes/material/equipment/work and other obligations stated elsewhere in the specification.

x) Any other activities which are not mentioned above but essential and required.

xi) If specified, at road crossing the pipe shall be laid in encasing pipes, wrapped & coated M.S pipes shall be used as encasing pipes. The encasing pipe shall project beyond the berm or both sides of the road. The encasing pipe shall be supported on P.C.C saddles if the site condition warrants so.

13.2 Materials

The materials shall conform to part-I of this series. Sewerage net work in Township shall generally be of R.C.C/S.W.G pipes, R.C.C pipes being used normally for pipe sizes of 400mm dia and above. In plant area, at road crossings etc Cast Iron Pipes may be used.

© 2022 MECON Limited All rights reserved

13.3. Excavation of trenches & pits

Excavation shall be carried out according to Chapter of Earthwork.

Before starting earth work in excavation, temporary drainage arrangement shall be provided to prevent surface water entering the trenches and pits at the cost of Contractor.

Excavation of trenches and pits for pipelines shall be carried out in shortest possible time so as to avoid sinking of ground and consequent damage to the pipelines.

Excavation of trenches for pipelines and surface drains, shall be in exact accordance with the plans and section, alignment, levels and gradients as indicated on the drawings or as directed at site by the Engineer. The final bed must be dressed, levelled or trimmed to proper gradient and rammed with sprinkling of sand and got passed by the Engineer. No excavation shall be made below the specified levels without written permission of the Engineer. Should any excavation be taken below the specified level due to carelessness of the Contractor, he will fill in such excavation at his own expense as specified in clause 2.12.

13.4 Cast Iron Pipes

I.S 3114 has to be followed in general for Laying and jointing of pipes unless otherwise specified.

13.4.1 Back filling

For the purpose of back filling, the depth of the trench shall be considered as divided into the following three zones from the bottom of the trench to its top.

ZONE-"A" From the bottom of the trenches to the level of the center line of the pipe.

ZONE-"B" From the level of the center line of the pipe to a level 300 mm above the top of the pipe.

ZONE-"C" From a level 300 mm above the top to the top of the trench.

© 2022 MECON Limited All rights reserved

Trenches shall not be back filled until the pipe joints have been tested, alignment and gradient passed by the Engineer but back filling shall be done, at least from the bottom of the trench to the level of the center line of the pipe (ZONE "A") leaving 450 mm on either side of the joints uncovered, with earth till testing is completed. These joints should however be kept covered with mats, gunny, straws etc., to avoid damage to joints by temperature effects.

While back filling care should be taken to ensure that no damage should be done to the pipeline. All back fill materials shall be free from cinders, ashes, slag, refuse, rubbish, vegetables or organic material, lumpy or foreign material, boulders, rocks or stones or other materials which in the opinion of the Engineer is unsuitable or deleterious. However, materials containing stones up to 20 cm as the greatest dimension may be used in Zone-"C" unless specified otherwise herein.

Backfilling in Zone-"A" shall be done by hand with sand, fine gravel or other approved material placed in layers of 80 mm and compacted by tamping. The back filling material shall be deposited in the trench for its full width of each side of the pipe, fitting and appurtenances simultaneously.

Backfilling in Zone-"B" shall be done by hand or approved mechanical methods. Special care being taken to avoid injuring or moving the pipes. The type of back fill materials to be used and the method of placing and consolidating shall be prescribed by the Engineer to suit individual locations.

Back filling in Zone-"C" shall be done by hand or approved mechanical methods. The type of back fill materials and method of filling shall be as prescribed by the Engineer.

Paving and metaling shall be reinstated in as good order as before removal and the Contractor shall do adequate ramming and watering of under layers to guard against subsequent settlement all at his cost.

13.4.2 Custody of pipes

The Contractor shall remain responsible for the safe custody of pipes, specials and other materials supplied by him/issued to him either free or on cost recoverable basis till these are laid installed, tested, back filled etc., and handed over to the Engineer.

The Contractor shall verify the conditions of the pipes, specials etc., at the time of receipt from sources and shall be responsible for all damages during

© 2022 MECON Limited All rights reserved

handling, transporting, laying, installing, testing etc., and the cost of such damages shall be borne by the Contractor.

13.4.3 Erection/laying of pipelines

i) Erection of all equipment shall be carried out with highly skilled workers.

ii) The pipelines shall be laid and supported properly and it shall be deemed as a contractual obligation that the lines are not thrown out of alignment or lifted off during commissioning and subsequent operation.

13.4.4 Pipeline erection

All the underground pipelines shall be laid in accordance with IS: 3114.

13.4.5. Handling of pipes & fittings

Unloading of pipes & fittings

While unloading, pipes shall not be dropped down from trucks on hard surface. This should be done with the help of a steadying rope and timber skids. Pipes should not be dragged, specially to the spigot end along hard surface.

Lowering of pipes & fittings

Proper implements, tools etc. shall be provided and used by the contractor while lowering pipes & fittings in the trenches and in no case these should be dropped. Pipes over 300mm dia shall be handled with the help of chain pulley blocks with tripod supports.

Detection of cracks in pipes and fittings

The pipes and fittings shall be inspected for defects and cracks by ringing with a light hammer preferably while suspended. Smearing the outside with chalk dust helps location of the crack. If doubt persists, pouring a little Kerosene on the inside of the pipe at the suspected spot will confirm it as it will seep through.

Cleaning of pipes and fittings

© 2022 MECON Limited All rights reserved

All foreign materials shall be cleaned from the socket and spigot ends both from inside and outside. Every precaution shall be taken to prevent foreign material from entering the pipe while it is being laid. When pipe laying is not in progress, the open ends of the pipe shall be closed suitably.

Cutting of pipe

The cutting of pipe for inserting valves, fittings or closure pieces shall be done in a neat manner without damage to the pipe. Pipe cutting machine may be used for this purpose and in case it is not available, for large diameter pipes electric arc cutting method using a carbon or steel rod may be adopted. The pipes can be cut by using chisels also depending on the circumstances.

Direction

On level ground the socket ends should face the upstream. When the line runs uphill the socket ends should face the upgrade.

Permissible deflection

In case it becomes necessary to deflect pipe from a straight either in the vertical or horizontal plane, due to obstructions or where long radius curve is permitted, the following norms shall be adhered to:- Lead joint 2.5 degrees Rubber joints

for nominal bore	80 to 300mm	5 degrees
for nominal bore	350 to 400mm	4 degrees
for nominal bore	450 to 750mm	3 degrees

Anchor and thrust blocks

Suitable concrete thrust blocks shall be installed, wherever the thrust is appreciable, specially at dead ends and bends. In case of unbalanced also this may be required. In case of steep gradients and under influence of temperature change also thrust blocks may be required for rigidly joined pipes.

It is advisable to avoid sharp bends above 45 degrees. In soft ground as far as possible two bends should not be put together and be separated by at least one length of straight pipe.

© 2022 MECON Limited All rights reserved

Anchor or thrust blocks shall be generally as per IS: 5330 and thrust resistant design pressure shall be equal to the test pressure.

13.4.6 Pipe jointing

The type of jointing will be defined in the detailed working drawing and Schedule of items i.e. whether they should be (i) socket and spigot with molten lead or lead wool joint or (ii) flanged joint.

13.4.6.1 Socket & spigot joints

a) Molten lead joints

Unless otherwise specified, socket and spigot joints shall be done with molten lead.

The spigot shall be cleaned of the coating, carefully entered in the socket of the adjacent pipe by one or more laps of white hampen spun yarn, sufficient yarn only being driven into the socket to leave the depth of the lead specified. The proper depth of each joint shall be tested before running the lead by passing completely round it a wooden gauge, notched out to the correct depth of lead, the notch being held close up against the face of the socket. The pipes shall be carefully packed underneath so that they shall bear properly throughout their whole length.

The lead shall be carefully skinned of all scale when melted in a cast iron pot or patent melting machine. The joints must be perfectly dug before being run with lead. The pipes shall again be examined for line and level and the space left in the socket shall be filled in generally by pouring in melted lead. This may be done best by using proper loading rings or if these are not available, by wrapping a ring or hemp rope, covered with clay round the pipe at the end of the sockets leaving a hole into which lead shall be poured. For large pipes, it is also necessary to leave one or more air vents around lower half of the joints. The lead shall be rendered thoroughly fluid and each joint shall be filled at one pouring. If the pipe is too large for the joint to be filled from one ladle, two or more ladles shall be used. It is to be noted that the lead should be heated to such a temperature as will ensure that it flows completely around the joint. Overheating of lead shall be avoided.

After a section of convenient length has been laid, lead caulking shall be commenced. The lead shall be freed from the loading pipe outside the socket of the other pipe with a flat chisel, and then

© 2022 MECON Limited All rights reserved

caulked around 3 separate times, with proper caulking tools of increasing thickness and a hammer 2 to 3 kg in weight in such a manner as to make the joints sound and water tight. After being well and evenly set, the joint is to be left flush neat and even with the socket. The approximate weight of lead and spun yarn for different size of cast iron pipe socket and spigot joints, as per IS: 3114-1985 are given in the Table-I.

TABLE – I

QUANTITY OF LEAD AND SPUN YARN

FOR DIFFERENT SIZES OF PIPES

Nominal dia / size of pipe (mm)	**Lead / Joint kg**
80	1.8
100	2.2
125	2.6
150	3.4
200	5.0
250	6.1
300	7.2
350	8.4
400	9.5
450	14.0
500	15.0
600	19.0
700	22.0
750	25.0
800	31.5
900	35.0
1000	41.0
1100	46.0

© 2022 MECON Limited All rights reserved

1200	50.0
1500	66.5

Note: The quantities of lead given are provisional and a variation of 20% is permissible either way.

b) Lead wool joint

In the event of the Engineer specifying or permitting the use of lead wool the joint shall be made as follows:

Hempen spun yarn shall be driven into the socket and thoroughly caulked with suitable caulking tools. Lead wool shall then be introduced and this caulking shall be repeated with each turn of lead wool under which the socket is full within 3 mm and the wool of the lead wool is compressed into dense mass. The joint shall then be finally pressed with finishing tool. The table giving the quantity of lead wool and yarn to be used in different sizes of pipes is given in the Table-2

TABLE 2

Nominal Internal dia in (mm)	Lead wool weight in (kg)	Spun yarn weight in (kg)
80	1.30	0.17
100	1.70	0.23
150	2.41	0.34
175	2.89	0.37
200	3.37	0.57
225	3.63	0.64
250	4.11	0.74
300	4.82	0.82
350	6.04	1.17
375	6.52	1.25
400	7.00	1.33
450	9.64	1.84
500	10.86	1.99
600	12.79	2.83

© 2022 MECON Limited All rights reserved

TABLE 2

Nominal Internal dia in (mm)	Lead wool weight in (kg)	Spun yarn weight in (kg)
750	15.68	3.52
825	17.12	3.88
900	18.80	4.25
1200	28.44	6.01

Note: Higher tolerance may be permitted under special circumstances depending upon site condition for quality of lead wool and spun yarn.

13.4.6.2 Flanged joints

Flanged joints should be made by painting the facing of the flanged with graphite or red lead freely. Packing should be of rubber insertion sheet or compressed fibre board and of approved thickness. The packing should be of full diameter of the flange with proper pipe hole and bolt holes cut out and even at both the inner and outer edges. All the bolts shall be tightened up evenly on all sides keeping the longitudinal axes of adjoining pipe in exactly the same straight line.

The interior of the pipe must be checked carefully so as to be free from all dust and other foreign matters as the work proceeds. For this purpose a disc plate or brush sufficiently long to pass two or more joints from the end of the pipe last laid shall be continuously drawn forward as the pipes are laid. The ends of the pipes must be securely protected preferably with wooden plugs during the process of the work. The pipes laid must not be made receptacles either for tools, cloth or any other material during progress of the work.

13.4.7 Inspection & testing

a) If required all materials shall be inspected by the Engineer before dispatch to site. All the tests shall be carried out in the manufacturer's works and necessary test certificates shall be furnished as proof of such testing. The Contractor shall intimate the Engineer at least two weeks in advance for any such inspection / testing. All facilities for inspection / testing including necessary test certificates shall be provided by the Contractor at his own cost.

b) After completion of erection all pipelines shall be inspected by the representative of the Contractor and the Engineer. Any discrepancy,

© 2022 MECON Limited All rights reserved

defect pointed out during this inspection shall be made good by the Contractor to the entire satisfaction of the Engineer without additional cost.

c) All pipes with valve and fittings shall be tested to 1.5 times maximum working pressure. The pressure should remain constant for a period of 8 hours. All arrangements for testing shall be done by the Contractor. Any defect found during testing shall be made good by the Contractor to the entire satisfaction of Engineer and the test shall be repeated till acceptable results are achieved. Any special tools, instrument or equipment required for these tests shall be provided by the Contractor for tests only.

d) All oils, lubricants and other consumables required during tests and trials of different equipment shall be supplied and arranged by the Contractor at his own cost.

13.4.8 Painting

i) All equipment, valves and other exposed steel parts shall be given a coat of red oxide, zinc chromate or red lead and two coats of final approved quality paint according to the colour scheme of the Purchaser.

ii) All the exposed pipes and fittings shall be painted with two coats of paints of approved quality.

13.4.9 Commissioning

After pressure testing the main, it should be flushed with water of sufficient velocity to remove all dirt and foreign materials.

The system shall be commissioned after all necessary tests have been conducted successfully. All lubricants, oils, and other consumables required for commissioning of the system shall be supplied by the Contractor at no extra cost. Commissioning of the equipment to be supplied, if any, by the Owner, shall be carried out by the Contractor under guidance of the representatives of the supplier of these equipment and Engineer. Any adjustment and/or changes/ rectifications that may be found necessary during commissioning of these equipment shall be carried out by the Contractor at his cost.

13.5. Stoneware Glazed Pipelines (S.W.G)

© 2022 MECON Limited All rights reserved

13.5.1 Back filling

Trenches shall not be back filled until the pipe joints have been tested, alignment and gradient passed by the Engineer, but back filling shall be done at least for a depth equal to the diameter of the pipe or 300 mm whichever is greater over the pipes leaving 450 mm on either side of the joints uncovered with earth till the testing is completed. These joints should however be kept covered with mats, gunny bags, straws etc., to avoid damage to joints by temperature effects.

While back filling care should be taken to ensure that no damage is done to the pipelines. The first 300 mm of filling material immediately over and around the pipe should be of soft material free from clods and stones etc. The remainder of the filling materials shall be watered and rammed in layers not exceeding 250 mm at a time.

Paving and metalling shall be reinstated in as good order as before laying of the pipelines.

Unless otherwise required by the Engineer, there shall be a minimum cover of 700 mm over the pipes and at road crossing etc., it shall not be less than 900 mm.

13.5.2 Laying of pipes

The laying of the pipelines shall commence only after the levels of the bottom of the trench at various points have been checked by the Engineer. Cracked pipes whether at the socket or in the body shall be rejected. All SW pipes shall be fitted together on the surface of the ground to ensure a proper fit before they are lowered. The spigots and sockets shall be properly cleaned and brushed, if necessary & then lowered by hand to the bottom of the trench.

The pipes shall be carefully laid to the alignment, levels and gradients shown on the plans and sections, and great care shall be taken to prevent, sand, earth or other matter from entering the pipes during laying. As it is not permitted to rectify errors of grade by packing up underneath with earth, care should be taken in excavating and slight scraping, if necessary, done to bring to grade. The pipes between manholes shall be laid truly in straight lines without vertical or horizontal undulations.

Bedding, haunching or encasing of the pipes during laying shall be in accordance with IS: 4127 and shall be done with cement concrete in proportion (1:4:8) to prevent ground water from entering the pipelines.

© 2022 MECON Limited All rights reserved

All inverts shall be laid from site rail fixed at the true levels, with proper boning rod. The sight rails and boning rods shall be provided, fixed and maintained by the Contractor at his own expense.

The pipes shall be laid, sockets facing up the gradient, beginning at the lower end, and with the sockets, resting in the socket rest holes cut in the trench bottom. Each pipe shall be laid singly and no pipe shall be laid until the trench has been excavated to its required depth to a distance of twenty yards in front of the pipes to be laid.

No pipes of any description shall be covered until they have been passed by the Engineer.

13.5.3 Jointing of pipes

(a) Cement joint

The stoneware pipes shall be cement jointed normally. In case, if specified so, bituminous joints shall be used. In each joint, spun yarn soaked in neat cement slurry or gasket of tarred yarn shall be passed round the joint and inserted in it by means of suitable jointing tools. More skeins of spun yarn or gasket shall then be added and well rammed home. The yarn shall be moistened to avoid absorbing moisture from cement mortar.

The yarn should be so placed as to centre the spigot of one pipe within the socket of the other and shall prevent the jointing mortar penetrating inside the pipe where it might set and interfere with the flow of sewage.

Yarn or gasket (cemented or tarred) so rammed shall not occupy more than one-fourth of the depth of socket.

The cement shall be thoroughly mixed with medium sand in the proportion of 1:1 (1 cement: 1 sand) and then just enough water shall be added to make the mix plastic. On no account, the mortar shall be made soft or sloppy. The mix shall then be carefully inserted by hand into the joint.

Special care shall be taken for inserting the mortar into the portion of the joint underneath the pipe. When the cement mortar has been inserted, it shall be punched or caulked into the joint with wooden caulking tools, and more cement mortar shall be added until the space of the joint has been filled completely with tightly caulked cement. No fillet of cement shall be added.

© 2022 MECON Limited All rights reserved

No mortar which is older than 30 minutes shall be permitted for jointing. The cement mortar joints shall be cured at least for seven days before testing.

The inside of each pipe shall be carefully wiped out with a mop or scrapper sufficiently long to pass two joints from the end of the pipe and any projecting cement shall be removed.

All pipes entering the manholes should be set in cement mortar 1:3 and a completely watertight junction effected.

(b) Bituminous joints

If specified so this joint will be used. Asphalt and sand in the ratio of 1:7 shall be boiled together and filled into the socket in a molten state with the aid of special moulds.

13.5.4 Testing of pipes

Testing of pipes shall be done wholly at contractor's expense inclusive of apparatus, provision of water etc., and/or as per IS: 4127.

After cement has had time to set, the pipes shall be tested in lengths between manholes in the following 'manner'. In the lowest manhole a plug shall be inserted in the pipe. The disc in the pipe and at the upper manhole shall be fitted with a filling pipe with a right angle bend and an air cock. The length of pipe shall then be filled with water by means of the pipe connection on the upper disc. The air cock in the upper disc shall be kept open, while the pipeline is being filled to permit the escape of air.

When the pipes have been filled with water and air excluded, the air cock shall be shut and water shall be poured into a conical "Filler" attached to the testing and filling pipe of the disc in the upper manhole until water remains in the filler. The testing or filling pipe shall then be raised and fastened so that the height of the pipe is six feet, which will be the usual test pressure for stone ware pipe joints.

The test will be for an hour or such longer period as may be set by the Engineer. If the water level does not fall more than 25 mm in the length of 90 metre, the test may be considered satisfactory.

If it is found that certain pipe joints are leaking, the water shall be run off and joints recaulked with cement mortar and the test repeated till it is proved by the Contractor that the joints are leak-proof.

13.5.5 Concrete bedding, haunching & encasing

© 2022 MECON Limited All rights reserved

Unless otherwise specified in the Schedule of Quantities, all SW pipes shall be laid in accordance with IS: 4127. As per site condition haunching or/and encasing of pipes with cement concrete may be required as per clause 4.2 & 4.3 of IS 4127. The concreting shall be done with 1:4:8 cement sand concrete.

Where sewers have less than 1.2 m cover at places of heavy traffic, these shall be surrounded with mass concrete if directed by the Engineer.

13.5.6 Handling of pipes

While unloading, pipes shall not be dropped from the trucks/carts on the ground. Timber skids and steadying rope should be used while unloading or lowering in trenches. To avoid damage specially to spigot end, pipes should not be dragged on the hard surface.

13.6 Manholes

All manholes shall be of the size and type as given in the Schedule and shall be provided as per drawing or as directed by the Engineer. All the manholes shall be circular or other shape as shown in drawing. The bed shall be in cement concrete of Mark-10B (or 1:3:6 mix) (Size of coarse aggregate 40 mm and down) of 100 mm thickness or as shown in the drawing and shall be projected out 75 mm from the outside face of the wall all round. or as shown in the drawing. The working part including channeling, benching etc., made of P.C.C. shall be of grade-15C (or 1:2:4 mix). All manholes shall be plastered inside with 1:3 cement plaster 20 mm thick and finished with a floating coat of neat cement unless otherwise specified.

Concrete used for precast RCC cover slabs shall be of grade 20C (or 1:1.5:3 mix)and shall be constructed as per drawing.

The top level of manholes shall be generally 100 mm above the surrounding ground levels or as directed by the Engineer. Channeling inside the manhole shall be done in smooth bends.

The end of pipe shall be neatly built in and finished in cement mortar 1:3.

Circular medium duty Cast iron water sealed manhole cover and frames, 560 mm dia (clear opening) and nominal weight 128 kg shall be provided for each manhole and shall be in accordance with IS:1726. Manhole covers with double seals (Light duty) with wt. as specified in schedule of item shall be provided within compound near the buildings if specified so. If specified heavy duty cover and frames, either circular or double

© 2022 MECON Limited All rights reserved

triangular type, shall be provided. Step irons shall be provided with two coats of bituminous paint and shall be as per drawing.

In cases where branch pipe sewers enter the manhole or main pipe sewer at a level more than 1m, from the main sewer, a drop connection shall be provided. The extra pipe length required for this connection will be paid under item for pipelines. No other extra payment will be allowed.

All exposed surfaces of cast iron frame and cover shall be painted with two coats of bituminous painting

13.7 Marker plates

Marker plate indicating the particular service installed shall be provided along the routes of pipes laid below ground. These shall be of mild steel, with the type of service and direction of flow, painted on it. The markers shall be set firmly in a concrete base and installed at all corners and turning points. Over straight runs markers shall be spaced at 100 m intervals generally.

14.0 ROAD WORK

14.1 General

Road works in general shall be executed according to the requirements "Specifications for road and bridge works" of Ministry of Road Transport & Highways (MORT&H) published by Indian Roads Congress. The brief description of MORTH specification for different items is indicated below.

14.2 EXCAVATION FOR ROADWAY

14.2.1 Scope

This work shall consist of excavation, removal and disposal of all materials necessary for the construction of roadway, in accordance with requirements of these specifications. It shall include the hauling and stacking of or hauling to sites of embankment and sub-grade construction, suitable cut materials as required, as also the disposal of unsuitable cut materials in specified manner, trimming and finishing of the road to specified dimensions.

14.2.2 Construction Operations

14.2.2.1 Excavation - General:

All excavations shall be carried out in conformity with the directions laid here in under and in a manner approved by the Engineer. The work shall be

© 2022 MECON Limited All rights reserved

so done that the suitable materials available from excavation are satisfactorily utilized as deemed fit or as approved by the Engineer.

While planning or executing excavations, all adequate precautions against soil erosion, water pollution etc. shall be taken as per MORTH Clause 306 and appropriate drainage measures shall be taken in order to keep the site free of water in accordance with MORTH Clause 311.

The excavations shall conform to the lines, grades, side slopes and levels shown in the drawings or as directed by Engineer. Subject to the permitted tolerances, any excess depth/ width excavated beyond the specified levels/dimensions on the drawings shall be made good at the cost of Contractor with suitable material of characteristics similar to that removed and compacted to the requirements of MORTH Clause 305. All debris and loose material on the slopes of cuttings shall be removed. No backfilling shall be allowed to obtain required slope excepting that when boulders or soft materials are encountered in in cut slopes, these shall be excavated to approved depth on instruction of Engineer and the resulting cavities filled with suitable material and thoroughly compacted in an appropriate manner.

After excavation, the sides of excavated area shall be trimmed and the area contoured to minimize erosion and ponding, allowing natural drainage to take place.

In case rock is encountered, rock excavation shall be done as per provisions of clause 301.3.5 of MORTH specification.

14.2.2.2 Preparation of Cut Formation

The cut formation, which serves as a sub-grade, shall be prepared to receive the sub-base/base course as directed by the Engineer.

Where the material in the sub-grade has a density less than specified in Table 300-1 of MORTH specification, same shall be loosened to a depth of 500 mm (that is within 500 mm from the lowest level of the pavement) and compacted in layers in accordance with MORTH Clause 305 adding fresh material, if any required, to maintain the formation level as shown in drawing.

Any unsuitable material encountered in the sub-grade level shall be removed and replaced with suitable material and compacted in accordance with MORTH Clause 305.

In rocky formations, the surface irregularities shall be corrected and the levels brought up to the specified elevation with granular base material as directed by the Engineer, laid and compacted in accordance with the respective specifications for these materials. The unsuitable material shall

© 2022 MECON Limited All rights reserved

be disposed off in accordance with clause 301.3.11 of MORTH specification. After satisfying the density requirements, the cut formation shall be prepared to receive the sub base/base course in accordance with MORTH Clauses 310 and 311.

14.2.2.3 Finishing operation shall include the work of properly shaping and dressing all excavated surfaces and it shall conform to clause 301.7 of MORTH specification.

14.2.3 Measurements for Payment

Excavation for roadway shall be measured by taking cross sections at 20m intervals before the excavation starts (after clearing and grubbing/ stripping etc. as the case may be) and after its completion according to drawing and computing the volumes in cu. m by the method of average end areas for each class of material encountered.

14.3 EMBANKMENT & SUBGRADE CONSTRUCTION

14.3.1 General

These Specifications shall apply to the construction of embankments including sub-grades, earthen shoulders and miscellaneous backfills with approved material obtained from approved source, including material from roadway and drain excavation, borrow pits or other sources. All embankments sub-grades, earthen shoulders and miscellaneous backfills shall be constructed in accordance with the requirements of these specifications and in conformity with the lines, grades and cross-sections shown in drawing or as directed by the Engineer.

14.3.2 Materials

14.3.2.1 Physical requirements:

The materials used in embankments, sub-grades, earthen shoulders and miscellaneous backfills shall be soil, moorum, gravel, a mixture of these or any other material approved by the Engineer. Such materials shall be free of logs, stumps, roots, rubbish or any ingredient likely to deteriorate or affect the stability of embankment.

Expansive clay exhibiting marked swell and shrinkage properties ("free swelling index" exceeding 50 per cent when tested as per IS: 2720 - Part 40) shall not be used as a fill material. Where expansive clay with acceptable "free swelling index" value is used as a fill material, sub-grade and top 500 mm portion of the embankment just below sub-grade shall be non-expansive in nature.

© 2022 MECON Limited All rights reserved

14.3.2.2 The size of the coarse material in the mixture of earth shall ordinarily not exceed 75 mm when placed in the embankment and 50 mm when placed in the sub-grade. The maximum particle size shall not be more than two-thirds of the compacted layer thickness.

14.3.2.3 Ordinarily, only the materials satisfying the density requirements given in MORTH Table 300-1shall be employed for the construction of the embankment and the sub-grade.

MORTH TABLE 300-1. DENSITY REQUIREMENTS OF EMBANKMENT AND SUBGRADE MATERIALS

S. No	Type of Work	Maximum laboratory dry unit weight when tested as per IS: 2720 (Part 8)
1.	Embankments up to 3 metres height, not subjected to extensive flooding	Not less than 15.2 kN/cu.m.
2.	Embankments exceeding 3 metres height or embankments of any height subject to long periods of inundation.	Not less than 16.0 kN/cu. m
3.	Subgrade and earthen shoulders / verges/backfill	Not less than 17.5 kN/cu. m.

Notes: The material to be used in sub-grade shall be non-expansive should also satisfy design CBR at the specified dry density and moisture content.

The material to be used in high embankment construction shall satisfy the specified requirement of strength parameters.

14.3.2.4 **General requirements**:

The materials for embankment shall be obtained from approved sources with preference given to materials becoming available from nearby roadway excavation or any other excavation.

Borrow materials: Where the materials are to be obtained from borrow areas, arrangement for locating the source of supply of material for embankment and sub-grade, shall be the sole responsibility of the Contractor. Borrow pits along the road shall be discouraged.

Representative samples from each of the identified borrow areas shall be obtained and tested at the laboratory. It shall be ensured that the subgrade material when compacted to the density requirements as in MORTH Table 300-2 shall yield the design CBR value of the sub-grade.

© 2022 MECON Limited All rights reserved

MORTH TABLE 300-2. COMPACTION REQUIREMENTS FOR EMBANKMENT AND SUBGRADE

S. No	Type of work/ material	Relative compaction *as* percentage of max. laboratory dry density *as* per IS: 2720 (Part G)
1.	Subgrade and earthen shoulders	Not less than 97%
2.	Embankment	Not less than 95%
3.	Expansive Clays	
	a) Sub-grade and 500 mm portion just below the sub-grade	Not allowed
	b) Remaining portion of Embankment	90-95%

The Contractor shall at least 7 working days before commencement of compaction submit the following to Engineer for approval.

(i) The values of maximum dry density and optimum moisture content obtained in accordance with IS: 2720 (Part 7) or (Part 8), as the case may be, appropriate for each of the fill materials contractor intends to use.

(ii) A graph of density plotted against moisture content from which each of the values in (i) above of maximum dry density and optimum moisture content were determined.

The maximum dry density and optimum moisture content approved by the engineer shall be basis of compaction.

14.3.3 Construction Operations

14.3.3.1 **Setting out**: After the site clearance, the work shall be set out to MORTH Clause 301.3.1, The limits of embankment / sub-grade shall be marked by fixing batter pegs on both sides at regular intervals as guides before commencing the earthwork. The embankment / sub-grade shall be built sufficiently wider than the design dimension so that surplus material may be trimmed, ensuring that the remaining material is to the desired density and in position specified and conforms to the specified side slopes.

14.3.3.2 Dewatering:

© 2022 MECON Limited All rights reserved

If the foundation of the embankment is in an area with stagnant water, the same shall be removed by bailing out or pumping and the area of the embankment foundation shall be kept dry.

14.3.3.3 Compacting ground supporting embankment/subgrade:

Where necessary, the original ground shall be levelled to facilitate placement of first layer of embankment, scarified, mixed with water and then compacted by rolling in accordance with MORTH clauses 305.3 and 305.3.6 so as to achieve minimum dry density as given in MORTH Table 300-2.

In case where the difference between the subgrade level (top of the subgrade on which pavement rests) and ground level is less than 0.5 m and the ground does not have 97 per cent relative compaction with respect to the dry density as given in Table 300-2, the ground shall be loosened up to a level 0.5 m below the subgrade level, watered and compacted in layers in accordance with MORTH Clauses 305.3.5 and 305.3.6 to achieve dry density not less than 97 per cent of dry density as given in Table 300-2

14.3.3.4 Spreading material in layers and bringing to appropriate moisture content

14.3.3.4.1 The embankment and sub-grade material shall be spread in layers of uniform thickness in the entire width with a motor grader. The compacted thickness of each layer shall not be more than 250 mm when vibratory roller / vibratory soil compactor is used and not more than 200mm when 80-100KN static roller is used. Successive layers shall not be placed until the layer under construction has been thoroughly compacted to the specified requirements as in Table 300-2 and got approved by Engineer. Each compacted layer shall be finished parallel to the final cross-section of the embankment.

14.3.3.4.2 Moisture content of the material shall be checked at the site of placement prior to commencement of compaction and if found to be out of limits, the same shall be made good. Where water is required to be added, water shall be sprinkled from a water tanker fitted with sprinkler capable of applying water uniformly with a controllable rate of flow to variable widths of surface but without any flooding. If the material delivered to the roadbed is too wet, it shall be dried by aeration and exposure to the sun till the moisture content is acceptable for compaction.

Moisture content of each layer of soil shall be checked in accordance with IS: 2720 (Part 2), and unless otherwise mentioned, shall be adjusted, making due allowance for evaporation losses, that at the time of compaction it is in the range of 1 per cent above to 2 per cent below the optimum moisture content determined in accordance with IS:2720 (Part 8)

© 2022 MECON Limited All rights reserved

as the case may be. Expansive clays shall, however, be compacted at moisture content corresponding to the specified dry density, but on the wet side of the optimum moisture content obtained from the laboratory compaction curve.

14.3.3.4.3 Embankment and other areas of fill shall be constructed evenly over their full width and their fullest possible extent, and the Contractor shall control and direct construction plant and other vehicular traffic uniformly over them. Damage by construction plant and other vehicular traffic shall be made good by the Contractor with material having the same characteristics and strength as the material had before it was damaged.

Whenever fill is to be deposited against the face of a natural slope, or sloping earthworks face including embankments, cuttings, other fills and excavations steeper than 1 vertical to 4 horizontal, such faces shall be benched as per MORTH Clause 305.4.1 immediately before placing the subsequent fill.

14.3.3.5 Compaction

Static three-wheeled roller, self propelled single drum vibratory roller, tandem vibratory roller, pneumatic tyre roller, pad foot roller etc. of suitable size and capacity as approved by the Engineer shall be used for the different types and grades of materials required to be compacted either individually or in suitable combinations.

The compaction shall be done with the help of vibratory roller of 80 to 100 kN static weight with plain or pad foot drum or heavy pneumatic tyred roller of adequate capacity capable of achieving required compaction.

14.3.4 Drainage

The surface of the embankment / sub-grade at all times during construction shall be maintained at such a cross fall (not flatter than that required for effective drainage of an earthen surface) as will shed water and prevent ponding.

14.3.5 Repairing of damages caused by rain/spillage of water:

The soil in the affected portion shall be removed before next layer is laid and refilled in layers and compacted using small vibratory roller, plate compactor or power rammer to achieve the required density in accordance with MORTH Clause 305.3.6. Tests shall be carried out to ascertain the density requirements of the repaired area. The work of repairing the damages including widening of the cut, if any, shall be carried out by the Bidder at his own cost, including the arranging of machinery/equipment for the purpose.

© 2022 MECON Limited All rights reserved

14.3.6 Finishing operations

Finishing operations shall include the work of shaping and dressing the shoulders/verge/roadbed and side slopes to conform to the alignment, levels, cross-sections and dimensions shown on the drawings subject to .the surface tolerance described in MORTH Clause 902. Both the upper and lower ends of the side slopes shall be rounded off to improve appearance and to merge the embankment with the adjacent terrain.

The topsoil, removed and conserved (MORTH Clause 301.3.2 and 305.3.3) shall be spread over the fill slopes as per directions of the Engineer to facilitate the growth of vegetation. Slopes shall be roughened and moistened slightly prior to the application of the topsoil in order to provide satisfactory bond. The depth of the topsoil shall be sufficient to sustain plant growth, the usual thickness being from 75 rnm to 150 mm.

Where directed, the slopes shall be turfed with sods in accordance with MORTH Clause 307. If seeding and mulching of slopes is prescribed, this shall be done to the requirement of MORTH Clause 308.

14.3.7 Embankment and subgrade around structures

To avoid interference with the construction of abutments, wing walls or return walls of culvert/bridge structures, work on embankment forming approaches to such structures shall be suspended until such time as the construction of the latter is sufficiently advanced to permit due completion of approaches without the risk of damage to the structure.

The filling around culverts, bridges and other structures upto a distance twice the height of the road from the back of die abutment shall be carried out independent of the work on the main embankment. The fill material shall not be placed against any abutment or wing wall until the concrete or masonry has been in position for 14 days. The embankment and subgrade shall be brought up simultaneously in equal layers on each side of die structure to avoid displacement and unequal pressure.

14.3.8 Plying of Traffic

Construction and other vehicular traffic shall not use the prepared surface of the embankment and/or sub grade. Any damage arising out of such use shall, however, be made good.

14.3.9 Surface Finish and Quality Control of Work

© 2022 MECON Limited All rights reserved

The surface finish of construction of subgrade shall conform to the requirements of MORTH Clause 902. Control on the quality of materials and works shall be exercised in accordance with MORTH Clause 903.

14.3.10 Subgrade Strength

It shall be ensured prior to actual execution that the borrow area material to be used in the subgrade satisfies the requirements of design CBR.

Subgrade shall be compacted and finished to the design strength consistent with other physical requirements. The actual laboratory CBR values of constructed subgrade shall be determined on remoulded samples, compacted to the field density at the field moisture content and tested for socked and tested for soaked / unsoaked condition.

14.3.11 Measurements for Payment

Earth embankment/subgrade construction shall be measured separately by taking cross sections at 20 m intervals after completion of clearing and grubbing and after completion of embankment/ sub grade. The volumes of earthwork shall be computed in cubic meters by the method of average end areas.

14.4 GRANULAR SUB-BASE (GSB)

14.4.1 Scope

This work shall consist of laying and compacting well-graded material on prepared sub-grade. The material shall be laid in one or more layers as sub-base or lower sub-base and upper sub-base (termed as sub -base hereinafter) as necessary according to lines, grades and cross-sections shown on the drawings.

14.4.2 Materials

The material to be used for the work shall be natural sand, crushed gravel, crushed stone, crushed slag or combination thereof depending upon the grading required. The material shall be free from organic or other deleterious constituents and conform to as given in MORTH Table 400-1 and physical requirements given in Table 400-2. Grading III and IV shall preferably be used in lower sub-base. Grading V and VI shall be used as a sub-base–cum –drainage layer. The grading to be adopted for a project shall be as specified in Contract. Where the sub-base is laid in two layers as upper sub-base and lower sub-base, the thickness of each layer shall not be less than 150 mm.

© 2022 MECON Limited All rights reserved

Table 400-1: Grading For Granular Sub-Base Materials

IS Sieve Designation	Per cent by weight passing the IS Sieve					
	Grading I	Grading II	Grading III	Grading IV	Grading V	Grading VI
75.0 mm	100	-	-	-	100	-
53.0 mm	80-100	100	100	100	80-100	100
26.5 mm	55-90	70-100	55-75	50-80	55-90	75-100
9.50 m	35-65	50-80	-	-	35-65	55-75
4.75 mm	25-55	40-65	10-30	15-35	25-50	30-55
2.36 mm	20-40	30-50	-	-	10-20	10-25
0.85 mm	-	-	-	-	2-10	-
0.425 mm	10-15	10-15	-	-	0-5	0-8
0.075 mm	<5	<5	<5	<5	-	0-3

It shall be ensured prior to actual execution that the material to be used in the sub-base satisfies the requirements of CBR and other physical requirements when compacted and finished.

Table 400-2: Physical requirements of materials of Granular Sub-base

Aggregate Impact Value (AIV)	IS: 2386 (Part 4) or IS: 5640	40 maximum
Liquid Limit	IS: 2720 (Part 5)	Maximum 25
Plasticity Index	IS: 2720 (Part 5)	Maximum 6
CBR at 98% dry density (at IS:2720- Part 8)	IS: 2720 (Part 5)	Minimum 30

14.4.3 Construction Operations

14.4.3.1 Preparation of sub-grade:

Immediately prior to the laying of sub-base, the sub-grade already finished to MORTH Clause 301 or 305 as applicable shall be prepared by removing all vegetation and other extraneous matter, lightly sprinkled with water if necessary and rolled with two passes of 80 -100 kN smooth wheeled roller.

14.4.3.2 Spreading and compacting:

The sub-base material shall be spread on the prepared sub-grade with the help of a motor grader of adequate capacity and maintaining the required slope and grade during the operation.

© 2022 MECON Limited All rights reserved

The equipment used for mix-in-place construction shall be a rotavator or similar approved equipment capable of mixing the material to the desired degree.

Moisture content of the loose material shall be checked in accordance with IS:2720 (Part 2) and suitably adjusted by sprinkling additional water to optimum moisture content corresponding to IS:2720 (Part 8).

Immediately thereafter, rolling shall start. For a compacted single layer up to 200 mm the compaction shall be done with the help of a vibratory roller of minimum 80 to 100 kN static weight capable of achieving the required compaction. Rolling shall commence at the lower edge and proceed towards the upper edge longitudinally for portions having unidirectional cross fall and super elevation. For carriageway having crossfall on both sides, rolling shall commence at the edges and progress towards the crown.

Each pass of the roller shall uniformly overlap not less than one third of the track made in the preceding pass. During rolling, the grade and cross fall (camber) shall be checked and any high spots or depressions, which become apparent, corrected by removing or adding fresh material. The speed of the roller shall not exceed 5 km per hour.

Rolling shall be continued till the density achieved is at least 98 per cent of the maximum dry density for the material determined as per IS:2720 (Part 8). The surface of any layer of material on completion of compaction shall be well closed, free from movement under compaction equipment and from compaction planes, ridges, cracks or loose material. All loose, segregated or otherwise defective areas shall be made good to the full thickness of layer and re-compacted.

14.4.3.3 Surface Finish and Quality Control of Work

The surface finish of construction shall conform to the requirements of MORTH Clause 902. Control on the quality of materials and works shall be exercised by the Engineer in accordance with Section 900 of MORTH specification.

14.4.4 Arrangements for Traffic

During the period of construction, arrangement of traffic shall be maintained in accordance with MORTH Clause 112.

14.4.5 Measurements for Payment

Granular sub-base shall be measured as finished work in position in cubic meter. The protection of edges of granular sub-base extended over the full formation as shown in the drawing shall be considered incidental to the

© 2022 MECON Limited All rights reserved

work of providing granular sub-base and as such no extra payment shall be made for the same.

14.5 WATER BOUND MACADAM (WBM)

14.5.1 Scope

This work shall consist of clean, crushed aggregates mechanically interlocked by rolling and bonding together with screening, binding material where necessary and water laid on a properly prepared sub-grade/ sub-base/ base or existing pavement, as the case may be finished in accordance with the requirements of these Specifications and in close conformity with the lines, grades, cross-sections and thickness as per approved plans or as directed by the engineer.

14.5.2 Materials

14.5.2.1 Coarse aggregates: Coarse aggregates shall be either crushed or broken stone, crushed slag or any other naturally occurring aggregates such as kankar and laterite of suitable quality. If crushed gravel /shingle is used, not less than 90 percent by weight of the gravel/ single pieces retained on 4.75 mm sieve shall have at least two fractured faces. The aggregates shall conform to the physical requirement set forth in Table 400-8. If the water absorption value of the coarse aggregate is greater than 2 per cent, the soundness test shall be carried out on the material delivered to site as per IS: 2386 (Part-5).

14.5.2.2 Crushed or broken stone:

The crushed or broken stone shall be hard, durable and free from excess flat, elongated, soft and disintegrated particles, dirt and, other deleterious material.

TABLE 400-8: Physical requirements of coarse aggregates for Water Bound Macadam for sub-base /base courses

Test	Type of Test	Test Method	Requirements
1.	* Los Angeles Abrasion value or	IS:2386 (Part-4)	40 per cent (Max)
	* Aggregate Impact value	IS: 2386 (Part-4) or IS:5640**	30 per cent (Max)
2.	Combined Flakiness and Elongation Indices (Total) ***	IS:2386 (Part-1)	30 per cent (Max)

* Aggregate may satisfy requirements of either of the two tests.

© 2022 MECON Limited All rights reserved

** Aggregates like CC Block metal, kankar, laterite etc. which get softened in presence of water shall be tested for Impact value under wet conditions in accordance with IS: 5640.

*** The requirement of flakiness index and elongation index shall be enforced only in the case of crushed broken stone and crushed slag.

14.5.2.3 Grading requirement of coarse aggregates:

The coarse aggregates shall conform to one of the Gradings given in MORTH Table 400-9 as specified.

Table 400-9: Grading requirements of Coarse Aggregates

Grading No.	Size Range	IS Sieve Designation	Per cent by weight passing
1.	63 mm to 45 mm	75 mm	100
		63 mm	90-100
		53 mm	25-75
		45 mm	0-15
		22.4 mm	0-5
2.	53 mm to 22.4 mm	63 mm	100
		53 mm	95-100
		45 mm	65-90
		22.4 mm	0-10
		11.2 mm	0-5

Note: The compacted thickness for a layer with Grading 1 & 2 shall be 75 mm.

14.5.2.4 Screenings:

Screenings to fill voids in the coarse aggregate shall generally consist of the same material as the coarse aggregate. However, where permitted, predominantly non-plastic material such as moorum or gravel (other than rounded river material) may be used for this purpose provided liquid limit and plasticity index of such material are below 20 and 6 respectively and fraction passing 75 micron sieve does not exceed 10 per cent.

Screenings shall conform to the grading set forth in Table 400-10. The consolidated details of quantity of screenings required for various grades of stone aggregates are given in MORTH Table 400-11. The table also gives the quantities of materials (loose) required for 10 m^2 for sub-base/base compacted thickness of 75 mm.

© 2022 MECON Limited All rights reserved

The use of screens shall be omitted in the case of soft aggregates such as brick metal, kankar, laterites ,etc. as they a likely to get crushed to a certain extent under rollers.

MORTH Table 400-10: Grading For Screenings

Grading Classification	Size of Screenings	IS Sieve Designation	Per cent by weight passing the IS Sieve
A	13.2mm	13.2 mm 11.2 mm 5.6 mm 180 micron	100 95-100 15-35 0-10
B	11.2 mm	11.2 mm 9.5 mm 5.6 mm 180 micron	100 80-100 50-70 5-25

MORTH Table 400-11.
Approximate Quantities of Coarse Aggregates and screenings required for 75 mm Compacted Thickness of Water Bound Macadam (WBM) Sub-Base/Base Course For 10 sqm Area

Classifi-cation	Size Range	Comp-acted Thick-ness	Loose Qty.	Screenings			
				Stone Screening		Crushable Type such as Moorum or Gravel	
				Grading Classifi-cation & Size	For WBM subbase / base course (Loose qty)	Grading Classific ation & Size	Loose Qty.
Grading 1	63 mm to 45 mm	75 mm	0.91 to 1.07 cum	Type A 13.2 mm	0.12 to 0.15 cum	Not Uniform	0.22 to 0.24 cum
-do-	-do-	-do-	-do-	Type B 11.2 mm	0.20 to 0.22 cum	-do-	-do-
Grading 2	53 mm to 22.4 mm	75 mm	-do-	-do-	0.18 to 0.21 cum	-do-	-do-

The above mentioned quantities should be taken as guide only for estimation of quantities for construction etc.

Application of binding material may not be necessary when the screenings used are of crushable type such as moorum or gravel.

© 2022 MECON Limited All rights reserved

14.5.2.5 Binding material:

Binding material to be used for water bound macadam as a filler material meant for preventing reveling, shall comprise of a suitable material approved by the Engineer having a Plasticity Index(PI) value of less than 6 as determined in accordance with IS: 2720 (Part-5).

The quantity of binding material where it is to be used will depend on the type of screenings. Generally quantity required for 75 mm compacted thickness of water bound macadam will be 0.06-0.09 $m^3/10m^2$.

14.5.3 Construction Operations

14.5.3.1 Preparation of base

The surface of the sub-grade/ sub-base/base to receive the water bound macadam course shall be prepared to the specified lines and cross fall (camber) and made free of dust and other extraneous material. Any ruts or soft yielding places shall be corrected in an approved manner and rolled until firm surface is obtained if necessary by sprinkling water. Any sub-base/base/surface irregularities, where predominant, shall be made good by providing appropriate type of profile corrective course (leveling course).

14.5.3.2 Spreading coarse aggregates:

The coarse aggregates shall be spread uniformly and evenly upon the prepared sub-grade/sub-base/base to proper profile by using templates placed across the road about 6 m apart., in such quantities that the thickness of each compacted layer is not more than 75. Wherever possible, approved mechanical devices such as aggregate spreader shall be used to spread the aggregates uniformly so as to minimize the need for manual rectification afterwards. Aggregates placed at locations which are inaccessible to the spreading equipment, may be spread in one or more' layers by any approved means so as to achieve the specified results.

The spreading shall be done from stockpiles along the side of the roadway or directly from vehicles. No segregation of large or fine aggregates shall be allowed and the coarse aggregate as spread shall be of uniform gradation with no pockets of fine material.

The surface of the aggregates spread shall be carefully checked with templates and all high or low spots remedied by removing or adding aggregates as may be required. The surface shall be checked frequently with a straight edge while spreading and rolling so as to ensure a finished surface as per approved drawings.

© 2022 MECON Limited All rights reserved

The coarse aggregates shall not normally be spread more than 3 days in advance of the subsequent construction operations.

14.5.3.3 Rolling

Immediately following the spreading of the coarse aggregate, rolling shall be started with three wheeled power rollers of 80 to 100 kN capacity or tandem or vibratory rollers of 80 to 100 kN static weight. Except on super elevated portions where the rolling shall proceed from inner edge to the outer, rolling shall begin from the edges gradually progressing towards the centre. First the edge/edges shall be compacted with roller running forward and backward. The roller shall then move inward parallel to the centre line of the road, in successive passes uniformly lapping preceding tracks by at least one half width.

Rolling shall be discontinued when the aggregates are partially compacted with sufficient void space in them to permit application of screenings. However, where screenings are not to be applied, as in the case of crushed aggregates like CC Block metal, laterite and kankar, compaction shall be continued until the aggregates are thoroughly keyed. During rolling, slight sprinkling of water may be done, if necessary. Rolling shall not be done when the sub-grade is soft or yielding or when it causes a wave-like motion in the sub-grade or sub base course.

The rolled surface shall be checked transversely and longitudinally, with templates and any irregularities corrected by loosening the surface, adding or removing necessary amount of aggregates and re-rolling until the entire surface conforms to desired cross fall (camber) and grade. In no case shall the use of screenings be permitted to make up depressions.

Material which gets crushed excessively during compaction or becomes segregated shall be removed and replaced with suitable aggregates.

It shall be ensured that shoulders are built up simultaneously along with water bound macadam courses.

14.5.3.4 Application of screenings:

After the coarse aggregate has been rolled to MORTH Clause 404.3.5, screenings to completely fill the interstices shall be applied gradually over the surface. These shall not be damp wet at the time of application. Dry rolling shall be done while the screenings are being spread so that vibrations of the roller cause them to settle into the voids of the coarse aggregate. The screenings shall not be dumped in piles but be spread uniformly in successive thin layers either by the spreading motions of hand shovels or by mechanical spreaders, or directly from tipper with suitable

© 2022 MECON Limited All rights reserved

grit spreading arrangement Tipper operating for spreading the screenings shall be so driven as not to disturb the coarse aggregate.

The screenings shall be applied at a slow and uniform rate (in three or more applications) so as to ensure filling of all voids. This shall be accompanied by dry rolling and brooming. In no case shall the screenings be applied so fast and thick as to form cakes or ridges on the surface in such a manner as would prevent filling of voids or prevent the direct bearing of the roller on the coarse aggregate. These operations shall continue until no more screenings can be forced into the voids of the coarse aggregate.

The spreading, rolling, and brooming of screenings shall be carried out in only such lengths of the road which could be completed within one day's operation.

14.5.3.5 Sprinkling of water and grouting:

After the screenings have been applied, the surface shall be copiously sprinkled with water, swept and rolled. Hand brooms shall be used to sweep the wet screenings into voids and to distribute them evenly. The sprinkling, sweeping and rolling operation shall be continued, with additional screenings applied as necessary until the coarse aggregate has been thoroughly keyed, well-bonded and firmly set in its full depth and a grout has been formed of screenings. Care shall be taken to see that the base or sub-grade does not get damaged due to the addition of excessive quantities of water during construction.

In case of lime treated soil sub-base, construction of water bound macadam on top of it can cause excessive water to flow down to the lime treated sub-base before it has picked up enough strength (is still green) and thus cause damage to the sub-base layer. The laying of water bound macadam layer in such cases shall be done after the sub-base attains adequate strength, as directed by the Engineer.

14.5.3.6 Application of binding material:

After the application of screenings in accordance with MORTH Clauses 404.3.6 and 404.3.7. the binding material where it is required to be used (MORTH Clause 404.2.7) shall be applied successively in two or more thin layers at a slow and uniform rate. After each application, the surface shall be copiously sprinkled with water, the resulting slurry swept in with hand brooms, or mechanical brooms to fill the voids properly, and rolled during which water shall be applied to the wheels of the rollers if necessary to wash down the binding material sticking to them. These operations shall continue until the resulting slurry after filling of voids, forms a wave ahead of the wheels of the moving roller.

© 2022 MECON Limited All rights reserved

14.5.4 Setting and drying

After the final compaction of water bound macadam course, the pavement shall be allowed to dry overnight. Next morning hungry spots shall he filled with screenings or binding material as directed, lightly sprinkled with water if necessary and rolled. No traffic shall be allowed on the road until the macadam has set. The compacted water bound macadam course should be allowed to completely dry and set before the next pavement course is laid over it.

14.5.5 Surface Finish and Quality Control of Work

14.5.5.1 The surface finish of construction shall conform to the requirements of MORTH clause 902. Control on the quality of materials and works shall be done in accordance with Section 900 of MORTH specification. The water bound macadam work shall not be carried out when the atmospheric temperature is less than 10°C in the shade.

14.5.5.2 Reconstruction of defective macadam: where the surface is having irregularity or where the course is otherwise defective due to sub-grade soil mixing with the aggregates, the course to its full thickness shall be scarified over the affected area, reshaped with added material or removed and replaced with fresh material as applicable and recomputed. In no case shall depressions be filled up with screenings or binding material.

14.5.6 Measurements for payment

Water bound macadam shall be measured as finished work in position in cubic metres.

14.6 Wet Mix Macadam

14.6.1 Scope:

The work shall consist of laying and compacting clean, crushed, graded aggregate and granular material, premixed with water, to a dense mass on a prepared sub-grade / sub-base / base of existing pavement as the case may be. The material shall be laid in one or more layers as necessary to lines, grades and cross sections shown in drawing or as directed by Engineer

14.6.2 Materials:

Coarse aggregates shall be crushed stone. The aggregates shall conform to physical requirements set forth in Table 400-12 of MORTH specification. Grading requirement of aggregates shall conform to the grading given in Table 400-13 of MORTH specification.

© 2022 MECON Limited All rights reserved

Table 400-12: Physical Requirements of Coarse Aggregates for Wet Mix Macadam for Sub-base/Base Course

S.No.	Test	Test Method	Requirements
1)	Los Angeles Abrasion value or Aggregate Impact value	IS:2386 (Part-4) IS:2386 (Part-4) IS:5640	40 percent (Max.) 30 percent (Max.)
2)	Combined Flakiness and Elongation indices (Total)	IS:2386 (Part-1)	35 percent (Max.)*

* To determine the combined proportion, the flaky stone from a representative sample should first be separated out. Flakiness is weight of flaky stone metal divided by weight of stone sample. Only the elongated particles be separated out from the remaining (non-flaky) stone metal. Elongation index is weight of elongated particles divided by total non-flaky particles. The values of flakiness index and elongation index so found are added up.

Table 400-13: Grading Requirement of Aggregates for Wet Mix Macadam

IS Sieve Designation	Percent by weight passing the IS Sieve
53.00 mm	100
45.00 mm	95-100
26.50 mm	-
22.40 mm	60-80
11.20 mm	40-60
4.75 mm	25-40
2.36 mm	15-30
600.00 micron	8-22
75.00	0-5

Material finer than 425 micron shall have Plasticity Index (PI) not exceeding 6.

The final gradation approved within these limits shall be graded from coarse to fine and shall not vary from the low limit on one sieve to high limit on the adjacent sieve or vice versa.

14.6.3 Preparation of Base:

The surface of the sub-grade/ sub-base/base to receive the Wet Mix Macadam course shall be prepared to the specified lines and cross fall (camber) and made free of dust and other extraneous material. Any ruts or soft yielding places shall be corrected in an approved manner and rolled until firm surface is obtained if necessary by sprinkling water. Any sub-base/base/surface irregularities, where predominant, shall be made good by

© 2022 MECON Limited All rights reserved

providing appropriate type of profile corrective course (leveling course).

14.6.4 Provision of lateral confinement:

While construction of wet mix macadam, arrangement shall be made for the lateral confinement of wet mix. This shall be done by laying materials in adjoining shoulders along with the wet mix macadam layer and following the sequence of operation described in clause 404.3.3 of MORTH specification

14.6.5 Preparation of Mix

Wet mix shall be prepared in mixing plant of suitable capacity having provision for controlled addition of water and forced / positive mixing arrangement like pug mill or pan type mixer of concrete batching plant. Optimum moisture for mixing shall be determined in accordance with IS:2720(PART-8) after replacing the aggregate fraction retained on 22.4mm sieve with material of 4.75mm to 22.4mm size. While adding of water, due allowance should be made for evaporation losses. However at the time of compaction, water in the wet mix should not vary from the optimum value by more than agreed limits. The mixed material shall be uniformly wet and no segregation should be permitted.

14.6.6 Spreading of mix and compaction

Spreading and compaction of Mix shall be as per procedure laid down in Clauses 406.3.4 & 406.3.5 of Morth specification.

14.6.7 Setting and Drying

After final compaction of wet mix macadam course, the road shall be allowed to dry for 24 hours. No vehicular traffic shall be allowed on the finished wet mix macadam surface.

14.6.8 Surface finish and Quality control of work

The surface finish of construction shall conform to the requirements of clause 902 of MORTH specification. Control of the quality of materials and works shall be in accordance with Section 900 of MORTH specification.

14.6.9 Measurement for payment

Wet mix macadam shall be measured as finished work in position in cubic meter.

© 2022 MECON Limited All rights reserved

14.7 Bituminous Macadam

14.7.1 Scope

This work shall consist of construction of single course having 50 mm to 100 mm thickness or in multiple courses of compacted crushed aggregates premixed with a bituminous binder on a previously prepared base to the requirement of these specifications. Since the bituminous macadam is a open graded mix, there is a potential that it may trap water or moisture vapour within the pavement system. Therefore adjacent layer (shoulder) should have proper drainage quality to prevent moisture-included damage to the bituminous macadam.

14.7.2 Materials

14.7.2.1 Bitumen

The bitumen shall be viscosity grade paving bitumen complying with the standard specification IS:73, The type and grade of bitumen to be used would depend on the climatic conditions and the traffic. Guideline for selection of bitumen are given in Table 500-1

14.7.2.2 Coarse aggregate

The coarse aggregate shall consist of crushed rock or other hard material retained on 2.36mm sieve. They shall be clean, hard, durable and cubicle shape, free from dust and and soft organic or other deleterious substances. The aggregates shall satisfy the physical requirements specified in Table 500-6 of MORTH specification.

Table 500-6: Physical properties of Coarse Aggregate

Property	Test	Requirement	Test method
Cleanliness	Grain size analysis	Maximum 5% passing 0.075 micron	IS:2386 Part I
Particle shape	Combined flakiness and elongation indices	Maximum 35%	IS:2386 Part I
Strength	Los Angeles Abrasion value or Aggregate impact value	Maximum 40% Maximum 30%	IS:2386 Part IV IS:2386 Part IV
Durability	Soundness (sodium or magnesium)	5 cycles	

© 2022 MECON Limited All rights reserved

	Sodium Sulphate Magnesium Sulphate	Maximum 12% Maximum 18%	IS:2386 Part V IS:2386 Part V
Water absorption	Water absorption	Maximum 2%	IS:2386 Part III
Stripping	Coating and stripping of bitumen aggregate	Min. retained coating 95%	IS:6241
Water sensitivity	Retained Tensile Strength*	Min. 80%	AASHTO 283

* If the minimum retained tensile strength falls below 80%, use of anti stripping agent is recommended to meet the minimum requirement

14.7.2.3 Fine Aggregates:

Fine aggregates shall consist of crushed or naturally occurring mineral material, or a combination of two, passing the 2.36mm sieve and retained on 75 micron sieve. These shall be clean, hard, durable, free from dust and soft organic or other deleterious substances. Natural sand shall not be used in binder course.

14.7.2.4 Proportioning of Material

The combined aggregate shall not vary from the lower on one sieve to the higher limit on the adjacent sieve to avoid gap grading. The aggregate may be proportioned and blended to produce a uniform mix complying with the requirements in Table 500-7 of MORTH specification. The binder content shall be within a tolerance of ± 0.3 percent by weight of total mix when individual specimens are taken for quality control test in accordance with the provisions of MORTH Section 900.

Table 500-7: Aggregate Grading and Bitumen Content

GRADING	1	2
Nominal maximum aggregate size*	40 mm	19 mm
Layer Thickness	80-100 mm	50-75 mm
IS Sieve size (mm)	Cumulative % by weight of total aggregate passing	
45	100	
37.5	90-100	
26.5	75-100	100

© 2022 MECON Limited All rights reserved

19	-	90-100
13.2	35-61	56-88
4.75	13-22	16-36
2.36	4-19	4-19
0.3	2-10	2-10
0.075	0-8	0-8
Bitumen content** % by mass of total mix	3.3**	3.4**

* Nominal maximum aggregate size is the largest specified sieve size upon which any of the aggregate material is retained

** Corresponding to specific gravity of the aggregate being 2.7. In case aggregates having specific gravity more than 2.7, bitumen content can be reduced proportionately. Further, for regions where highest daily mean air temperature is 30^0 C or lower and lowest daily mean temperature is -10^0 C or lower, the bitumen content may be increased by 0.5 percent.

14.7.3 Construction Operation

14.7.3.1 Weather and seasonal limitation

The provisions of clause 501.5.1 of MORTH specification shall apply.

14.7.3.2 Preparation of Base

The base on which the bituminous macadam is to be laid shall be prepared, shaped and compacted in accordance with cause 501.8 and 902.3 (as appropriate) of MORTH specification and a prime coat shall be applied in accordance with MORTH clause 502 where specified or as directed by Engineer. The surface shall be thoroughly swept clean by a mechanical broom and the dust removed by compressed air. In location where mechanical broom cannot get access, other approved methods shall be used as directed by the Engineer.

14.7.3.3 Tack coat:

Tack coat shall be applied, as specified, in accordance with the provisions of clause 503 of MORTH specification.

14.7.3.4 Preparation and transportation of the mix, spreading and rolling:

Preparation and transportation of the mix shall be done as per provisions MORTH clauses 501.3, 501.4. Spreading shall be done as specified in MORTH clause 501.5.3. Rolling and compaction shall be carried out in

© 2022 MECON Limited All rights reserved

accordance with provisions of clauses 501.6 and 501.7 of MORTH specification.

14.7.4 Surface finish and quality control of work

The surface finish of the completed construction shall conform to the requirements of MORTH clause 902. For control of quality of materials and the works carried out, the relevant provisions of Section 900 of MORTH specification shall apply.

14.8 Dense Bituminous Macadam

14.8.1 Scope

The specification describes the design and construction procedure for Dense Bituminous Macadam (DBM) for use mainly, but not exclusively, in base / binder and profile corrective courses. The work shall consist of construction in a single or multiple layers of DBM on a previously prepared base or sub-base. The thickness of single layer shall be minimum 50mm to 100mm.

14.8.2 Materials

14.8.2.1 Bitumen

The bitumen shall be viscosity grade paving bitumen complying with the standard specification IS:73, modified bitumen complying with clause 501.2.1 of MORTH specification or as otherwise specified in contract.

14.8.2.2 Coarse aggregate

The coarse aggregate shall consist of crushed rock retained on 2.36mm sieve. They shall be clean, hard, durable, of cubicle shape, free from dust and soft or friable matter, organic or other deleterious substances. The aggregates shall satisfy the requirements specified in Table 500-8 of MORTH specification.

Table 500-8: Physical Requirements of Coarse Aggregate for Dense Bituminous Macadam

Property	Test	Requirement	Test method
Cleanliness (dust)	Grain size analysis	Maximum 5% passing 0.075 micron	IS:2386 Part I
Particle shape	Combined flakiness and elongation	Maximum 35%	IS:2386 Part I

© 2022 MECON Limited All rights reserved

	indices*		
Strength	Los Angeles Abrasion value or Aggregate impact value	Maximum 35% Maximum 27%	IS:2386 Part IV
Durability	Soundness either: sodium sulphate or magnesium sulphate	Maximum 12% Maximum 18%	IS:2386 Part V
Water absorption	Water absorption	Maximum 2%	IS:2386 Part III
Stripping	Coating and stripping of bitumen aggregate mix	Min. retained coating 95%	IS:6241
Water sensitivity	Retained Tensile Strength**	Min. 80%	AASHTO 283

* To determine the combined proportion, the flaky stone from a representative sample should first be separated out. Flakiness is weight of flaky stone metal divided by weight of stone sample. Only the elongated particles be separated out from the remaining (non-flaky) stone metal. Elongation index is weight of elongated particles divided by total non-flaky particles. The values of flakiness index and elongation index so found are added up.

* * If the minimum retained tensile strength falls below 80%, use of anti stripping agent is recommended to meet the minimum requirement

14.8.2.3 Fine Aggregates:

Fine aggregates shall consist of crushed or naturally occurring mineral material, or a combination of two, passing the 2.36mm sieve and retained on 75 micron sieve. These shall be clean, hard, durable, dry and free from dust and soft or friable matter, organic or other deleterious matter. Natural sand shall not be allowed in binder course. However natural sand upto 50 percent of fine aggregate may be allowed in base course. The fine aggregate shall have a sand equivalent value of not less than 50 when tested in accordance with the requirement of IS: 2720 (PART 37). The plasticity index of the fraction passing the 0.425mm size sieve shall not exceed 4, when tested in accordance with IS:2720(PART 5).

14.8.2.4 Filler:

© 2022 MECON Limited All rights reserved

Filler shall consist of finely divided mineral matter such as rock dust, hydrated lime or cement approved by Engineer. The filler shall be graded within the limit indicated in Table 500-9 of MORTH specification. The filler shall be free from organic impurities and have a plasticity index not greater than 4. The plasticity index requirement shall not apply if filler is cement or lime. Where the aggregates fails to meet the requirement of water sensitivity test in Table 500-8 of MORTH specification, then 2 percent by total weight of aggregate, of hydrated lime shall be used and percentage of fine aggregate reduced accordingly.

Table 500-9: Grading requirements for mineral Filler

IS Sieve (mm)	Cumulative percent passing by weight of Total Aggregate
0.6	100
0.3	95-100
0.075	85-100

14.8.2.5 Aggregate grading and Binder content

When tested in accordance with IS:2386, PART 1 (wet sieving method), the combined grading of the coarse and fine aggregates and filler of the particular mixture shall fall within the limits given in Table 500-10 of MORTH specification for grading 1 or 2 as specified in the contract. To avoid gap grading, the combined aggregate gradation shall not vary from the lower limit on one sieve to higher limit on the adjacent sieve.

Bitumen content indicated in Table 500-10 is the minimum quantity. The quantity shall be determined in accordance with clause 505.3 of MORTH specification

Table 500-10: Composition of Dense Graded Bituminous Macadam

GRADING	**1**	**2**
Nominal aggregate size*	37.5 mm	26.5 mm
Layer Thickness	75-100 mm	50-75 mm
IS Sieve size (mm)	Cumulative % by weight of total aggregate passing	
45	100	
37.5	95-100	100
26.5	63-93	90-100
19	-	71-95
13.2	55-75	56-80
9.5	-	-

© 2022 MECON Limited All rights reserved

4.75	38-54	38-54
2.36	28-42	28-42
1.18	-	-
0.6	-	-
0.3	7-21	7-21
0.15	-	-
0.075	2-8	2-8
Bitumen content** % by mass of total mix	4.0**	4.5**

* Nominal maximum particle size is the largest specified sieve size upon which any of the aggregate material is retained

** Corresponding to specific gravity of the aggregate being 2.7. In case aggregates having specific gravity more than 2.7, bitumen content can be reduced proportionately. Further, for regions where highest daily mean air temperature is 30^0 C or lower and lowest daily mean temperature is -10^0 C or lower, the bitumen content may be increased by 0.5 percent.

14.8.3 Mix Design

The bitumen content required shall be determined following the Marshall Mix design procedure contained in Asphalt Institute Manual MS-2. The fines to bitumen ratio (F/B) by weight of total mix shall range from 0.6 to 1.2

14.8.3.1 Requirement for the Mix:

Apart from conformity with the grading and quality requirements for individual ingredients, the mixture shall meet the requirements set out in Table 500-11 of MORTH specification.

14.8.3.2 Binder Content:

The Binder content shall be optimized to achieve the requirements of the mix set out in Table 500-11 of MORTH specification. The binder content shall be selected to obtain 4 percent air void in mix design. The Marshall method for determining the optimum binder content shall be adopted as described in the Asphalt Institute Manual MS-2.

14.8.3.3 Job Mix Formula:

The contractor shall submit to Engineer the proposed Job Mix Formula for approval. While establishing the job mix formula, the contractor shall ensure that it is based on a correct and truly representative sample of the materials that will actually be used in the work and that the mix and its

© 2022 MECON Limited All rights reserved

different ingredients satisfy the physical and strength requirements of the specification.

14.8.3.4 Plant Trials (Permissible variations in job mix formula)

Once the laboratory mix is approved, the contractor shall carry out to establish that the plant can produce a uniform mix conforming to approved job mix formula. The permissible variations of the various ingredients in the actual mix from the job mix formula to be used shall be within the limits as specified in Table 500-13 of MORTH specification and shall remain within the gradation band.

14.8.3.5 Laying Trial

Once the plant trials have been successfully completed and approved, the contractor shall carry out laying trials as per clause 505.3.5 of MORTH specification to demonstrate that the proposed mix can be successfully laid and compacted all in accordance with clause 501 of MORTH specification.

14.8.4 Construction Operations

14.8.4.1 Weather and seasonal limitations:

The provisions of clause 501.5.1 of MORTH specification shall apply.

14.8.4.2 Preparation of Base:

The base on which the dense bituminous macadam is to be laid shall be prepared in accordance with cause 501 and 902 (as appropriate) of MORTH specification.

14.8.4.3 Prime Coat:

Where the material on which dense bituminous macadam is to be laid is other than a bitumen bound layer, a prime coat shall be applied, as specified, in accordance with the provisions of clause 502 of MORTH specification.

14.8.4.4 Tack coat:

Where the material on which dense bituminous macadam is to be laid is either bitumen bound layer or primed granular layer, tack coat shall be applied, as specified, in accordance with the provisions of clause 503 of MORTH specification.

14.8.4.5 Mixing and transportation of the mix, spreading and rolling:

© 2022 MECON Limited All rights reserved

Mixing and transportation of the mix shall be done as per provisions of clauses 501.3, 501.4 of Morth specification. Spreading shall be done as specified in clauses 501.5.3 and 501.5.4. For rolling and compaction clauses 501.6 and 501.7 of MORTH specification shall apply.

14.9 Bituminous Concrete

14.9.1 Scope:

The work shall consist of construction of Bituminous Concrete, for use in wearing and profile corrective courses. This work shall consist of construction of single layer of bituminous concrete on a previously prepared bituminous bound surface. A single layer shall be 30mm / 40mm / 50mm thick.

14.9.2 Materials

14.9.2.1 Bitumen:

The bitumen shall conform to clause 504.2.1 of MORTH specification

14.9.2.2 Coarse Aggregate:

The coarse aggregate shall be generally as specified in clause 504.2.2 of MORTH specification except that the aggregates shall satisfy the physical requirements of Table 500-16.

14.9.2.3 Fine Aggregates:

Fine aggregates shall be as specified in clause505.2.3 of MORTH specification

14.9.2.4 Filler:

Filler shall be as specified in clause505.2.4 of MORTH specification

14.9.2.5 Aggregate grading and Binder content:

When tested in accordance with IS:2386 Part 1 (Wet grading method), the combined grading of the coarse and fine aggregates and filler shall fall within the limits shown in Table 500-17 of MORTH specification.

© 2022 MECON Limited All rights reserved

14.9.3 Mix design

14.9.3.1 For requirement of the Mix, Binder content and Job Mix formula clauses 505.3.1, 505.3.2 and 505.3.3 respectively of MORTH specification shall apply.

14.9.3.2 Plant Trials

Permissible variations in Job Mix formula: The requirements for plant trials shall be as specified in clause 505.3.4 and permissible limits for variation shall be as given in Table 500-18 of MORTH specification

14.9.3.3 Laying Trials

The requirements for laying trials shall be as specified in clause 505.3.5 of MORTH specification. The compacted layers of bituminous concrete (BC) shall have minimum field density equal to or more than 92 percent of the average theoretical maximum specific gravity obtained on the day of compaction in accordance with ASTM D2041

14.9.4 Construction Operations:

14.9.4.1 Preparation of Base

The surface on which bituminous concrete is to be laid shall be prepared in accordance with cause 501 and 902 (as appropriate) of MORTH specification. The surface shall be thoroughly swept clean by mechanical broom and dust removed by compressed air. In locations where a mechanical broom cannot get access, other approved method shall be used as directed by Engineer.

14.9.4.2 Weather and seasonal limitations

The provisions of clause 501.5.1 of MORTH specification shall apply.

14.9.4.3 Tack Coat:

The provisions of clause 504.4.6 of MORTH specification shall apply.

14.9.4.4 Mixing and transportation of the mix, spreading and rolling:

Mixing and transportation of the mix shall be done as per provisions clauses 501.3, 501.4 of Morth specification. Spreading shall be done as specified in clauses 501.5.3 and 501.5.4. For rolling and compaction clauses 501.6 and 501.7 of MORTH specification shall apply.

14.10 Dry Lean Cement Concrete (DLC) sub-base for Concrete Pavement

© 2022 MECON Limited All rights reserved

14.10.1 **Scope**

The work shall consist of construction of (zero slump) dry lean concrete sub-base for cement concrete pavement in accordance with requirement of this specification in conformity with the lines, grades and cross section shown in drawing

The design parameters of dry lean concrete sub-base (width, thickness, grade of concrete, details of joints, if any, etc.) shall be as stipulated in drawing.

14.10.2 **Material**

14.10.2.1 **Cement**

Any of the following types of cement may be used with prior approval of Engineer.

Sl. no.	Type	Conforming to
1	Ordinary Portland Cement 43 grade	IS:8112
2	Portland Slag Cement	IS:455
3	Portland Pozzolana Cement	IS:1489 Part-I

If subgrade soil contains soluble sulphates in a concentration more than 0.5%, then Sulphate Resistant Cement conforming to IS:6909 shall be used.

14.10.2.2 **Aggregates**

Aggregates for lean concrete shall be natural material complying with IS:383. The aggregates shall not be alkali reactive. The limits of deleterious materials shall not exceed the requirement of Table 600-2 of MORTH specification.

14.10.2.2.1 **Coarse Aggregates**

Coarse aggregates shall comply with MORTH clause 602.2.6.2 except that maximum size of the coarse aggregates shall be 26.5 mm, and aggregate gradation shall comply with Table 600-1 of MORTH specification.

14.10.2.2.2 **Fine Aggregates**

The fine aggregates shall comply with clause 602.2.6.3 of MORTH specification

© 2022 MECON Limited All rights reserved

14.10.2.2.3 The material after blending shall conform to grading as indicated in Table 600-1 of MORTH specification.

14.10.2.2.4 **Water**

Water used for mixing and curing shall comply with MORTH clause 602.2.7

14.10.3 Proportioning of Materials for the Mix

14.10.3.1 The mix shall be proportioned with a maximum aggregate cementitious material ratio 15:1. The water content shall be adjusted to the optimum as per MORTH clause 601.3.2 for facilitating compaction by rolling. The strength and density requirements of concrete shall be determined in accordance with clauses 601.7 and 601.8 of MORTH specification by making trial Mixes.

14.10.3.2 **Moisture content**

The optimum water content shall be determined and demonstrated by rolling under trial length construction and the optimum moisture content and degree of compaction shall be got approved from Engineer. While laying in main work, the lean concrete shall have a moisture content between the optimum and optimum +2 percent, keeping in view the effectiveness of compaction achieved and to compensate for evaporation losses.

14.10.3.3 **Cement Content**

The cement content in dry lean concrete shall be such that the strength specified in MORTH clause 601.3.4 is achieved. The minimum cement content shall be 150 kg/cum of concrete.

14.10.3.4 Concrete Strength

The average compressive strength of each consecutive group of 5 cubes made in accordance with MORTH clause 903.5.1.1 shall not be less than 10 MPA at 7 days. In addition minimum compressive strength of any individual cube shall not be less than 7.5 MPA at 7 days.

14.10.4 **Sub-grade**

The sub-grade shall conform to the grades and cross sections shown on drawing and shall be laid and compacted in accordance with MORTH clause 305.

© 2022 MECON Limited All rights reserved

14.10.5 **Drainage Layer**

A drainage layer conforming to MORTH clause 401 shall be laid above the subgrade before laying the Dry Lean Concrete

14.10.6 **Construction**

Construction of Dry Lean Concrete sub-base (batching & mixing, transporting, placing, compaction, joints, curing etc.) shall be done as per procedure laid down in clause 601.6 of MORTH specification.

14.11 Cement Concrete Pavement

Scope, materials, proportioning of concrete, Joints (transverse, contraction, expansion, longitudinal), construction procedure, preparation and sealing of joints, acceptance criteria etc. shall be as per provisions of relevant clause and sub-clauses of 602 of MORTH specification.

14.12 **Miscellaneous Items**

Specifications of other miscellaneous items like Seal coat, Shoulders, Islands, median, cement concrete kerbs, footpath, drainage, geosynthetics, traffic signals, road marking etc. shall conform to relevant clauses of MORTH specification.

15.0 WATERPROOFING TO ROOFS, BASEMENTS & WATERPROOFING PAINTS

15.1 Scope

This chapter deals with different types of waterproofing on roof.

15.2 Material

The materials shall conform to Part-I.

15.3 General Workmanship

The waterproofing to roofs being specialised works the Contractor shall get these done by specialised firms/agencies.

15.4 Painting with Hot Bitumen

The surface to be painted shall be thoroughly dried and then cleaned, with wire brushes and cotton or gunny cloth, of all loose materials and scales. The surface shall further be cleaned with a piece of cloth lightly soaked in

© 2022 MECON Limited All rights reserved

kerosene oil. Bitumen shall be brought to the site in its original container and this shall not be removed from site till the painting job is completed. Before applying the main coatings of hot bitumen paints, one coat of bituminous primer shall be applied. The number of coats of hot bitumen shall either two coats or as specified in the Schedule of Items. The bitumen of approved quality (either of grade 80/100 or 30/40) or as specified shall be applied to the surface after heating it to the manufacturer's specifications. Care shall be taken to see that no blank patches are left and the quality of bitumen to be spread shall be as specified and shall be to the satisfaction of the Engineer.

15.5 Painting with Bitumen Emulsion

Before applying, the surface shall be cleaned thoroughly. Generally two coats of Bitumen Emulsion are provided over a coat of emulsion primer. Since the painting is with emulsion, the surface need not be made dry.

15.6 Waterproofing of Roof

15.6.1 With bitumen felt

Prior to laying the insulation, roof gradient shall be checked. If necessary, the roof shall be re-graded by screed to ensure everywhere a run off gradient of not less than 1 in 120. The screed shall consist of one part cement and four parts medium to coarse sand by volume. The screed shall be cured for 7 days. The surface shall then be cleaned of all foreign matter by wire brushing and dusting.

Waterproofing unless specified otherwise in drawings shall be the "heavy treatment type" with primer coat as described in IS: 1346. The method of laying roofing treatment, surface finishing with pea gravels, special mode of treatment for drain outlets, projecting pipes, parapet walls, expansion joints, gutters, timber roofs etc., shall conform to IS: 1346. The number of layers of felts shall be as specified in the drawing or Schedule of Items. The bonding bituminous material shall be of grade 30/40 or as specified and the minimum quantity of hot bitumen to be applied, shall be 1.2 kg/m2. Unless specified otherwise, the bituminous felts shall be hessian bases of Type-3 Grade-2. Pea gravel finish may be substituted by a coat of bituminous aluminium paint, where so specified in the Schedule of Items.

The cement mortar used for filling the chases shall be of mix 1:4 and the cement concrete for fillets shall be of the same grade as the roof slab.

Where special surface finish with precast concrete or clay tiles is specified, it shall be in accordance with the relevant chapter of this series.

15.6.2 With Bitumen Mastic

© 2022 MECON Limited All rights reserved

The work shall be carried out generally in accordance with IS: 4365 "Code of Practice for Application of Bitumen Mastic for Waterproofing of Roofs" or according to the manufacturer's specifications. The work shall be carried out by a firm of specialists in the trade.

The type of underlay or primer, thickness of application, surface finish etc., shall be as shown on drawing or described in the Schedule of Items. Bitumen melting shall be done in a mechanical mixer by gradually heating to about 200 degree 'C'. Coarse aggregate where required shall be added to the hot bitumen and stirred.

Each coat shall be spread evenly and uniformly by means of a float to the required thickness. Timber gauges shall be used to regulate the thickness. Particular care shall be taken to tuck the mastic into grooves on vertical surfaces, at joints, around pipes or other projections and at junction of adjoining bays.

15.6.3 Acrylic polymer based cementitious slurry coating with one layer of fibre glass cloth

Prior to laying of waterproofing coats, roof gradient shall be checked. The roof shall be re-graded by screed using M15 grade concrete (minimum 30 mm thick at lowest point) to ensure everywhere a run off gradient of not less than 1 in 100. The screed shall be cured for 7 days. The surface shall then be cleaned of all foreign matter by wire brushing and dusting.

Two layers of Acrylic polymer based cementitious slurry coating with one layer of fibre glass cloth in between coatings shall be provided as per manufacturer’s specification and application procedure

Over top coating a protective layer of screed (M 15) of 40 mm thick shall be provided including provision of necessary chicken mesh

15.6.4 Elastomeric membrane waterproofing treatment

Roofs of buildings shall be provided with 3 layers of waterproofing treatment:

First layer --- minimum 1.5mm thick elastomeric membrane waterproofing treatment coating with >=500% elongation conforming to ASTM C836 applied by a spray/brush/roller in two coats,

Second layer--- Over elastomeric membrane screed concrete (M 15) shall be laid using 12.5mm or below coarse aggregate with run-off gradient minimum 1 in 100

© 2022 MECON Limited All rights reserved

Third layer --Over screed concrete finally the wearing course shall be provided. Wearing course shall consist of pressed clay tiles of size 230x230x18mm laid in water proofing compound mixed cement mortar (1:3) and sealing of joints using sealing compound.

15.6.5 Water proofing treatment with Atactic Polypropylene Polymeric (APP) membrane

Material and workmanship shall be as per clause 22.11 of CPWD Specification

15.7 Waterproofing for Basement

15.7.1 The specification covers the requirements of waterproofing of basements, tunnels, ducts, pits, bunkers, etc.

The material used shall be **bitumen felt** type-3 of grade-2 conforming to IS: 1322, together with the specified bonding material and primer.

Waterproofing shall be provided on the outside of walls and top of the floors and shall be carried 150 mm above ground level.

The number of layers of bitumen felt to be used for walls and floor unless otherwise shown in the drawing shall be:

i) For depths upto five metres below ground : 2 layers.

ii) For depths beyond five metres : 3 layers.

The method of laying the bitumen felts and workmanship shall in general conform to IS: 1609-1991.

Waterproofing work shall be taken in hand only when the sub-soil water level is at its lowest, the site shall be kept dry by adequate arrangements for pumping out water till the work has been completed. For this purpose drains shall be formed along the edges of the excavation but beyond the building line, with suitable collecting sumps. In case of large excavation areas where it is necessary to dewater under the floor, additional land drains shall be formed across the excavation, to adequately drain the area. Adequate arrangements shall be made to prevent the sides of excavation from slipping while the work is in progress.

The base concrete of mud-mat shall be rendered smooth by a 20 mm thick sand-cement plaster (6:1). Any sharp corner over which the waterproofing course is to be laid shall be eased out by means of cement mortar fillets 7.5 cm in radius.

© 2022 MECON Limited All rights reserved

The surface must be dry before the next operation is carried out. Blown bitumen conforming to IS: 702 shall be applied hot over the prepared surface at the rate of 1.5 kg/m2 for the first layer and for every other subsequent layer(s). The laying of felt over the bitumen so applied shall always commence on the floor, and shall be carried to the walls only after treatment of the floor is complete. The minimum overlapping of joints at sides and ends of felts shall be 10 cm. Joints for subsequent layers of felt shall be staggered. All joints shall be completely sealed by blow lamp.

A protective flooring of either flat bricks in cement mortar 1:3 or 6 cm thick cement concrete type M15B or a coat of cement sand plaster (1:3) 4 cm thick shall be constructed over the waterproofing treatment to prevent damage to the latter during subsequent construction of the structural floor.

The walls shall be treated in a similar way, the bitumen felts joining at the base with the projecting felt laid over the mud-mat. The wall surface shall be made smooth, where necessary with a coat of cement plaster 1:5, the felts shall be laid as for the floor ensuring that the surface to be treated is dry and then a protective brick wall, half-brick nominal thickness shall be built in cement mortar 1:6 over the projecting mud-mat, the space between the wall and felt being grouted with cement slurry. Sufficient care shall be taken to ensure a perfect bond between the waterproofing on the floor and that on the walls.

The treatment on the wall shall be carried 150 mm above the surface of ground and tucked into a grove 6.5 cm. wide and 7.5 cm deep, the chase being filled with cement mortar (1:4).

Where waterproofing is done to the roof of an underground structure, such as a tunnel, it shall be done in a similar way. The structural concrete shall be rendered smooth, hot bitumen and bitumen felts applied in the same way as for the floor and walls, and over this shall be laid a protective layer of cement concrete grade M10C, 7.5 cm thick.

15.7.2 With epoxy based emulsion

Over the mud-mat a 20 mm plaster is to be provided to make the surface even.

On the plastered surface of the mud-mat, three coats of epoxy based leakproof emulsion shall be applied with reasonable gap between each coat in order to permit sufficient drying time.

Precaution should be taken that during the process of rod binding if any damages happens it should be immediately rectified by making patch

© 2022 MECON Limited All rights reserved

painting on the affected portion only and as such a complete vigilance is to be kept to rectify the defect.

After the rod binding is over the concreting should be done with high polymer based, chloride and sulphide free cement waterproofing additive/admixtures @ 2% by weight of cement all through the floor area and all through the vertically raised walls of four sides which shall remain underground upto a depth of 8 metre and above from ground level.

After the concreting and immediately after de-shuttering cleaning of the concrete surface on the external faces of the walls are to be done and then three coats of epoxy based leak proof emulsion shall be applied with a reasonable gap between the each coat before back filling. If the back filling is with hard material again a protective layer of plaster shall also be applied on the external faces of walls in order to avoid damages on the painted surface.

If the back filling is with soft sandy or alluvial soil there is no necessity for protective layer of plastering as mentioned above.

Epoxy based paint can be applied on the wet surface hence there shall be no stoppage of the normal progress of the project works.

15.8 Surface Application

Waterproofing done by surface application of bitumen based or epoxy based material shall conform strictly to the recommendations of the manufacturer. The work shall be carried out by a firm of specialists in the trade.

15.9 Guarantee

For the waterproofing on the roof as well as for underground basements the Contractor shall give guarantee in writing for the period of 7 to 10 years as specified in the Schedule of Item. For such guarantee the Contractor shall get guarantee from the manufacturer/specialised firms and forward the same to the Engineer. However, the Contractor shall be fully responsible for the serviceability of the waterproofing treatment throughout the guarantee period and any leakage during that guarantee period shall be stopped by the Contractor at no cost to the Owner and without disturbing working facility of the Owner.

15.10 Waterproofing with Non-Shrink Polymeric Waterproof Grouting Compound

15.10.1 Work Included

© 2022 MECON Limited All rights reserved

The Contractor shall furnish materials, labour, plant, equipment and tools to complete the work as specified and/or as shown in drawings.

15.10.2 Materials

Cement

Ordinary portland cement shall conform to IS: 269 and portland blast furnace cement shall conform to IS: 455.

Aggregates

All aggregates shall conform to IS: 383 Fine aggregates shall be approved river or pit sand.

Cement waterproofing compound

All cement waterproofing compound shall conform to IS: 2645 and shall be of approved quality.

Solvent less resin

High build polymeric surfacing which forms a thick resilient and flexible membrane on concrete with high resistance to oil and water.

Nozzle

15 mm dia threaded G.I. pipes of suitable length plugged at both ends.

Super plasticiser

High range water reducing admixture and integral cement waterproofer for concrete. Super plasticiser shall conform to ASTM C-194 Type F, IS: 9103 & IS:2645.

15.10.3 Waterproofing of underground structures

Waterproofing shall be carried out as per the approved manufacturer's specification and as stated below:

15.10.3.1 Raft

The sub-base (PCC) of the underground structure shall be cleaned of all dirts and kept dry by continuous pumping of water. 20 mm thick plaster with cement-sand mortar (1:3) mixed with approved cement waterproofing

© 2022 MECON Limited All rights reserved

compound as per manufacturer's specification shall be laid on top of the sub-base. The plaster shall be finished smooth with a steel trowel.

The plastered surface shall then be painted with two (2) coats of approved solvent less resin to form a thick resilient and flexible resinous membrane over the plastered surface.

Threaded nozzles of 15 mm dia and of suitable length shall be placed and fixed in a grid pattern of maximum 1.5 m centre to centre over the whole raft, prior to casting of RCC raft. similar nozzles will also be placed along the construction joint, if any, at regular intervals not exceeding 1.5 m c/c. Adequate precaution shall be taken to keep the nozzles plugged at both ends to prevent them from getting clogged by concrete. Similar nozzles shall also be post fixed at critical points, if required. Approved super plasticiser-cum-cement waterproofer shall be added to the concrete which shall be at least M20 grade as defined by IS: 456 and the water cement ratio of the concrete shall not exceed 0.45. Adequate precaution shall be taken to keep the nozzles vertical while concreting.

Approved non-shrink polymeric waterproof grouting compound mixed with cement slurry shall be injected through the nozzles under pressure by pump as per the instructions of the manufacturer. When the injection operation is over the nozzles shall be sealed with a sealing compound as per manufacturer's specification and instruction.

15.10.3.2 Vertical wall

15 mm dia threaded nozzle of suitable lengths shall be placed and fixed in a grid pattern of maximum 1.5 m centre to centre over the entire surface prior to concreting of the vertical wall. Similar nozzle are to be also fixed at construction joints, if any, y, at regular intervals not exceeding 1.5 m c/c. Adequate precaution shall be taken to keep the nozzles plugged at both the ends to avoid clogging of the nozzles by concrete. Similar nozzles shall also be post fixed at critical points, if required.

The concrete for the vertical wall shall be at least M20 grade as defined by IS:456 having a maximum water cement ratio of 0.45. Approved super plasticiser-cum-cement waterproofer shall be added to the concrete as per the manufacturer's specification. Adequate precaution shall be taken to keep the nozzles horizontal during concreting. The exterior surface of the concrete shall be plastered with 12 mm thick cement sand mortar (1:3) mixed with approved cement waterproofing compound conforming to manufacturer's specification. The plastered surface shall then be finished smooth with a neat coat of cement slurry and painted with two coats of approved solventless resin to form a thick resilient and flexible resinous membrane over the plastered surface. Approved non-shrink polymeric waterproof grouting compound mixed with cement slurry shall be injected

© 2022 MECON Limited All rights reserved

through the nozzles under pressure by pump as per the manufacturer's specification and shall be sealed with a sealing compound as per manufacturer's specification and instruction.

16.0 MISCELLANEOUS

16.1 False ceiling

16.1.1 Scope

This chapter deals with the specification for various types of false ceiling as listed below:

a) Wooden ceiling (solid wood) and decorative ply.

b) Ceiling with insulating Building Board/Particle Boards etc.,

c) A.C. Sheet and ply wood ceiling.

d) Plaster of Paris (Gypsum Anhydrous) ceiling over wooden frame.

e) Plaster of paris (Gypsum Anhydrous) Tiles ceiling.

f) Wooden cover, fillets, beading for ceiling.

16.1.2 General

16.1.2.1 Materials

All materials shall be in accordance with the general specifications of materials, Part-I, Schedule of items and as shown in drawings.

Special finishing materials as specified in schedule of item shall be procured from the specified source and got fixed by employing skilled worker in the trade under direct supervision of the manufacturer.

16.1.3 Openings for installation of light fittings

Openings in the ceiling for installation of A/C grills, light fittings shall be provided as per drawings.

16.1.4 Recess for pelmet

Recess for the installation of pelmets shall be provided where shown in drawings along the windows/ doors.

© 2022 MECON Limited All rights reserved

16.1.5 Grills

Grills made of wooden, M.S., Aluminium, PVC or any other material as necessary shall be provided as indicated in the drawing.

16.1.6 Frame work

The type of frame to receive the ceiling material may be of wood, aluminium or M.S. as specified in the schedule of item and as mentioned in the drawing.

16.1.7 Wooden framing for false ceiling

Unless otherwise specified in schedule of items the wooden frame work shall be of following description:

The frame work for false ceiling shall be of approved quality teak wood scantlings, the runners shall be 75 x 50 mm size and shall be spaced at 1200 mm c/c and the battens shall be 50 x 50 mm size spaced at 600 mm c/c (approx) forming a grid of 600 x 600 mm or any other grid suitable for fixing the false ceiling material and its size. The runner and battens shall be joined by halving joint using counter sunk 6 mm bolt with washer of required length with soffit of runner and batten in perfect level. The heading joints between runners shall be made with lap joints using 2 nos. 6 mm dia counter sunk bolts with washer. Heading lap joints between battens shall be made with suitable size screws. The wall ends of the runner shall be embedded in the wall (50 mm deep) and shall be grouted with 1:2:4 cement concrete. The soffit of framework shall be made perfectly horizontal. The teak wood frames shall be treated with 2 coats of wood preservations treatment before fixing the tiles/boards as the case may be.

The main runners of frames shall be suspended by M.S. flat 40 x 3 mm /12mm dia M.S. round/T.S. hangers placed at 1200 mm c/c (approx), the top end of the hangers shall be hocked to R.C.C. reinforcement of slab or fixed to M.S. flat cleats installed in slab for the purpose or hooked to purlins of the trusses. The hangers may be twisted or ends of M.S. round/T.S. hanger flattened to allow for fixing the same with T.W. frame or M.S. cleats with bolts of suitable size.

For teak wood framings of shaped ceilings the spacings of frames and hangers levels of false ceiling etc., shall be required to obtain the shapes/drops and profile of the ceiling and to the requirement of ceiling material. The frames shall be locally adjusted to create openings of required sizes for installation of light fittings, grills of air conditioning system.

© 2022 MECON Limited All rights reserved

16.1.8 Metal framing

16.1.8.1 Galvanised pressed steel framing system

Galvanised pressed steel framing system for false ceiling shall be procured from reputed manufacturer and installed by specialist agencies under technical guidance of the manufacturer and strictly as per their specifications. Unless specified otherwise these shall consist of G.I. rectangular pipes at 900 mm c/c suspended by M.S. hanger fixed to R.C.C. slab with M.S. cleats and cross channels fixed to rectangular pipes at 450 mm c/c as per "Galvolock" system of M/s Eastern Interior Pvt Limited or equivalent. Ceiling materials shall be fixed to cross channels as per specifications of the manufacturer.

Framing shall be adjusted to provide openings for the light fittings and air-conditioning grills but these shall be supported independently and not on the framing.

16.1.8.2 Aluminium grid ceiling framing system

Framing for Aluminium grid false ceiling system shall be of reputed manufacturer Bestlok, Eezilock or equivalent. It shall consist of aluminium main tee and cross tee's suspended by adjustable hangers fixed to R.C.C. floor with cleats. The grid may be 600 x 600 mm, 1200 x 600 mm or as per drawings. Ceiling materials, shall be fixed to frames strictly as per manufacturers specification.

16.1.9 Fixing of Ceiling

16.1.9.1 Wooden ceiling with planks

These shall be of class of wood and thickness as specified in Schedule of items. Unless specified otherwise the width of the ceiling board shall be 100 mm to 150 mm and shall be planed true on the exposed surface. The maximum length of the finished board shall be 1800 mm. The boards/strips shall be joined with tongue and grove joints and heading joints in adjacent board of the same strip shall be square butt type neatly finished. These joints shall be staggered in alternate strip or line. The boards shall be fixed to T.W. battens by headless brass pins. Moulding beads at junctions with walls and other locations as per drawings shall be provided. Necessary opening for installation of light fittings and A/C grill shall be provided and junctions if required shall be finished with moulded beads.

The false ceiling shall finally be checked for line and level, sand papered and polished with colourless polish to achieve matt satin natural finish.

© 2022 MECON Limited All rights reserved

16.1.9.2 Decorative ply ceiling

These shall be with decorative selected group matched ply of Teak Ply, white cedar ply or any other approved class of veneer ply in strips, square or rectangular panel matching the ply of wall panelling, if any, in the same room and of thickness as per schedule of item and drawings. The strip ply, square/rectangular panels shall be fixed to T.W. framework with panel pins. Moulded beads of same wood as that of ply of matching shade shall be provided at junctions with walls and as specified in drawings.

Where specific pattern of grains and shade is required the ply cut into shapes as per design may be pasted on a backing ply with adhesive and such made panels shall be fixed to framing.

The ceiling shall be checked for line, and levels and exposed surfaces shall be sand papered and finally polished with colourless polish to achieve matt satin natural finish.

16.1.9.3 Ceiling with insulation board/particle boards

Insulation boards shall be of approved manufacturer, shade, design and thickness as specified in schedule of items and drawings. These may be plain, textured, perforated with natural finish or with white finished surface.

The boards shall be cut to suit the panel sizes of ceiling with special tools and by skilled workmen strictly as per manufacturers specifications. The board shall be fixed to T.W. frames with brass screws or as per manufacturers recommendation and in case of metal frames as per recommendations of the manufacturer of the ceiling system. The joints where exposed shall be of uniform thickness (3 mm to 6 mm) and pattern as shown in drawings.

The ceiling shall be checked for line and level and exposed surfaces prepared appropriately to receive the paint as specified in schedule of item and drawing.

16.2. Wooden partitions

16.2.1 Scope

All materials for the wooden partitions shall be of respective class as specified in the part (I) and as mentioned in schedule of items.

16.2.2 Frame work

Unless otherwise specified in the schedule of items, framing for partitions shall be made of approved quality teak wood scantlings of sizes as

© 2022 MECON Limited All rights reserved

mentioned in schedule of items and drawing. The spacing of frames shall not exceed 1200 mm c/c in both direction. The joints of the frame shall be made as per standard joinery practice using standard adhesive as described in wood work chapter. The faces of the frames to receive ply/wooden board shall be true to line, level and plumb. The frames shall be firmly secured to walls, ceilings, floors by making chases and grouting the frames in 1:2:4 cement concrete or fixing the frames with metal clamps/flats screwed to above elements. The frame shall be treated with 2 coats of wood preservative. Where the panelling material is of decorative ply of 3.5 mm to 4 mm thickness, commercial ply of 6 mm thickness shall be fixed to the frame work for backing purpose. Where sunk (coffered) panels are to be made, combination of single and double layers ply shall be used for backing to achieve level difference for sunk panels.

16.2.3 Boarding/facing for partition

a) Wooden plank/board

These shall be of class of wood and thickness as specified in the schedule of item and drawings. These shall be fixed to backing wooden frame work with counter sunk brass screws in pattern and designs, with groves, joints, beads, fillets, cover moulds as shown in drawings. The exposed surfaces shall be sand papered and polished as specified.

b) Decorative ply wood facing

These shall be with decorative teak wood/rose ply/white cedar 3.5 to 4 mm thickness of selected pieces with matching colour, texture and grains and shall be fixed to the backing ply with panel pins in pattern, design, with uniform width of joints, beads, fillets, cover mould as shown in drawings. The exposed surfaces shall be lightly sand papered finished with colourless polish to achieve matt satin finish.

c) Jolly pan (laminated) board

Where specified Jolly pan boards shall be fixed to teak wood frame work strictly as per manufacturer's specification. The boards after fixing shall be cleaned of all adhesives etc.

d) Formica facing

Formica facing shall be fixed to the backing ply with standard adhesive as described for panelling works.

© 2022 MECON Limited All rights reserved

16.3 Expansion and Isolation Joints

16.3.1 General

Expansion and isolation joints in concrete structures shall be provided at specific places as per details indicated on the drawings. The materials and types of joints shall be as specified hereinafter. In case of liquid retaining structures, additional precautions shall be taken to prevent leakage of liquids as may be specified on the drawings or as directed by the Engineer. All materials are to be procured from reliable manufacturers and must have the approval of the Engineer. Where it is the responsibility of the Contractor to supply the material, the Engineer may demand test certificates for the materials and/or instruct the Contractor to get them tested in an approved-laboratory free of cost to the Owner. Joints shall be formed true to line, level, shape, dimension and quality as per drawings and specifications. Prior approval, for the method of forming the joints, should be obtained from the Engineer before starting the work.

16.3.2 Bitumen impregnated board

Bitumen impregnated fibre board of approved manufacturer as per IS: 1838 (Part 1)-1983 may be used as fillers for expansion joints. It must be durable and waterproof. It shall be compressible and possess a high degree of rebound. The dimensions of the board should be equal to that of the joint being formed. At the exposed end, the joint shall be sealed with approved sealing compound to a depth of at least 25 mm after application of an approved primer. The sealing compound and the primer shall be applied as specified by the manufacturer.

16.3.3 Joint sealing strips

16.3.3.1 General

Joint sealing strips may be provided at the construction, expansion and isolation joints as a continuous diaphragm to contain the filler material and/or to exclude passage of water. The sealing strips will be either metallic like G.I., Aluminium or Copper, or Non-metallic like rubber or P.V.C.

Sealing strips will not have any longitudinal joint and will be procured and installed in largest practicable lengths having a minimum number of transverse joints. The jointing procedure shall be as per the manufacturer's recommendations, revised if necessary, by the Engineer. If desired by the Engineer, joints in rubber seals may have to be vulcanised.

16.3.3.2 Metal sealing strips

© 2022 MECON Limited All rights reserved

Metal sealing strips shall be either G.I., Aluminium or Copper and formed straight, U-shaped, Z-shaped or any other shape and of thickness as indicated in the drawing and schedule of items and/or as instructed by the Engineer.

The transverse joints will be gas welded using brass rods and approved flux. In case it is found that the joints cannot be made leak proof, longer lap lengths and different method of brazing which will render it leak proof, will be adopted by the Contractor without any additional cost to the Owner. The edges shall be neatly crimped and bent to ensure proper bond with the concrete.

a) G.I. Strips

G.I. strips shall be minimum 1.5 mm thick and 150 mm in width unless specified otherwise. The Strips shall be strong, durable, without any rust or crease. At the joints, the overlapping should be for a minimum length of 50mm

b) Aluminium strips

Aluminium strips shall be minimum 18 SWG thick and 300 mm wide unless specified otherwise and shall conform to IS: 737. A minimum lap of 50 mm length is required at the joints.

c) Copper strips

The copper strips shall be minimum 18 SWG in thickness and 300 mm width.

It should be cleaned thoroughly before use so as to expose fresh surface, without any reduction in gauge. A minimum lap of 50 mm in length is required at the joints.

16.3.3.3 Non-metallic sealing strips

These will be normally in Rubber or PVC Rubber or PVC joint seals can be of shape having any combination of the following features:

a) Plain

b) Central bulb

c) Dumb-bell or flattened ends

d) Ribbed and corrugated wings

e) V-shaped

© 2022 MECON Limited All rights reserved

Transverse joints will be allowed only under unavoidable circumstances and with the specific approval of the Engineer. The actual size and shape shall be as shown in drawings/Schedule of Items and or as directed by the Engineer.

The method of forming these joints, laps etc., shall be as specified by the Manufacturer and/or as approved by the Engineer taking particular care to match the central bulbs and the edges accurately.

a) Rubber sealing strips

The minimum thickness of rubber sealing strips shall be 3 mm and the minimum width 100 mm. The material will be natural rubber and be resistant to corrosion, abrasion and attacks from the acids, alkalies and chemicals normally encountered in service. The physical properties will be generally as follows:

Specific Gravity : 1.1 to 1.15

Shore Hardness : 65A to 75A

Tensile Strength : 25 - 30 N/mm2

Maximum Safe Continuous Temperature : 75 Degree 'C'

Ultimate Elongation : Not less than 350%

b) P.V.C. sealing strips

The minimum thickness of P.V.C sealing strips will be 3 mm and the minimum width 100 mm. The material should be of good quality Polyvinyl Chloride highly resistant to tearing, abrasion and corrosion as well as to chemicals likely to come in contact with during use. The physical properties will generally be as follows:

Specific Gravity : 1.3 to 1.35

Shore Hardness : 60A to 80A

Tensile Strength : 10 - 15 N/mm2

Maximum Safe Continuous Temperature : 70 Degree 'C'

Ultimate Elongation : Not less than 275%

© 2022 MECON Limited All rights reserved

16.3.4 Bitumen compound

When directed, the gap in expansion joints shall be thoroughly cleaned and bitumen compound laid as per manufacturer's specifications. The compound to be used shall be of approved manufacture and shall conform to the requirements of IS: 1834.

16.4 Barbed Wire Fencing

16.4.1 Materials

16.4.1.1 Galvanised barbed wire

Barbed wire shall be properly galvanised and shall be obtained from the approved manufacturer as specified in detail in Part-1.

16.4.1.2 Other materials

The specifications of materials, for angle iron posts, concrete works, plasters, if any, and for other works, shall conform to the requirements as specified in Part-I.

16.4.2 Workmanship

The work shall comprise of the following:

a) Excavation in ground of required dimensions with all sides vertical in any type of soil including soft rock and removing the soil and dressing it neatly.

b) Filling the holes in full with cement concrete 1:3:6 mix, well packed, after erecting the posts in correct line, level and plumb. In case of any post coming at local depression, the hole may not be of full depth but the depth of concrete will always be made 60 cm raising it above ground level with necessary shuttering.

c) Where the angle iron posts are specified in the item these shall be 50 mm x 75 mm x 6 mm unless mentioned otherwise. 10 mm dia holes with saw cuts for inserting the wires shall be made as per the spacings of barbed wire shown in drawing or as directed by the Engineer. The foot of the post shall be provided with base plate for anchorage. The spacing shall be 2.5 m or as per drawing. After inserting the wire into holes the socket is to be pressed back.

d) Straining bolts are to be provided 15 m apart from each row of wire for maintaining proper tension in the wire and without any sag or looseness.

© 2022 MECON Limited All rights reserved

e) Posts are to be painted as directed by the Engineer.

16.5 Chain link fencing

16.5.1 Scope

The work under this specification covers the supply and fixing of galvanised steel chain link fencing with galvanised steel posts chain link fabric.

16.5.2 Material

Galvanised steel chain link fabric and galvanised steel pipe posts shall be obtained from the approved manufacturer as specified in detail in Part - I .

16.5.3 Workmanship

The GI pipe posts shall be embedded in plain cement concrete not leaner than 1:4:8 foundations. The height of posts above top of foundations and spacing of post shall not be more than 3 m. The chain link fabric shall be fixed to the fencing posts with the help of stretcher galvanised bars (25 x 6 flats) which will be bolted to the lugs welded to the posts. The stretcher bars shall be provided in the lapping of fabric also.

SPECIFICATION FOR CIVIL WORKS
PART – III NORMS OF CEMENT CONSUMPTION

CONTENTS

1. MASONRY WORK

2. PLAIN/REINFORCED CONCRETE WORK

3. FINISHING WORK

4. FLOORING WORK

5. MISCELLANEOUS ITEMS

6. WATER SUPPLY/DRAINAGE & SANITARY WORKSS

© 2022 MECON Limited All rights reserved

GENERAL

For calculating the requirements of cement in various items of work the following standards will be adopted. Over the above theoretical quantity of cement, additional allowance upto plus or minus 3% shall also be allowed as certified by the engineer.

For items not covered in this standard, CPWD standards shall be followed or calculated as per uses/requirement in absence of standard norms. Cement required for enabling work and cement required for testing purposes will be taken into account for consumption purpose. However, in no case such quantity should exceed 5% of the total cement used in the work or as certified by the engineer based on actual observation whichever is less.

MASONRY WORK

Sl.No	Description of Item	Cement Requirement
1.	Random rubble masonry with CM 1:4	1.255 quintals per cum
2.	Random rubble masonry with CM 1:6	0.825 quintal per cum
3.	Coursed rubble masonry in CM 1:6	0.75 quintal per cum
4.	Brick work in CM 1:4	0.950 quintal per cum of BW
5.	Brick work in CM 1:6	0.625 quintal per cum of BW
6.	Half brick work in CM 1:3	1.43 quintals per 10 sqm of area
7.	Half brick work in CM 1:4	1.06 quintals per 10 sqm of area
8.	75mm thick brick in CM 1:4	0.65 quintal per 10 sqm of area
9.	75mm thick brick in CM 1:3	0.81 quintal per 10 sqm of area
10.	Projected brick bands, Drip course etc. in CM 1:6 finished with 12mm thick cement plaster	0.165 quintal per 10 RM
11.	Half brick thick, Honey combed brick work in CM 1:4	0.064 quintals per sqm

PLAIN/REINFORCED CONCRETE

© 2022 MECON Limited All rights reserved

1.	RCC/PCC of nominal mix 1:5:10 complete (excluding finishing with CP)	1.30 quintals per cum of concrete
2.	RCC/PCC of nominal mix 1:4:8 complete (excluding finishing with CP)	1.70 quintals per cum of concrete
3.	RCC/PCC of nominal mix 1:3:6 complete (excluding finishing with CP)	2.23 quintals per cum of concrete
4.	RCC/PCC of nominal mix 1:2:4 complete (excluding finishing with CP)	3.18 quintals per cum of concrete
5.	RCC/PCC of nominal mix 1:1.5:3 complete (excluding finishing with CP)	4.05 quintals per cum of concrete

Controlled Concrete - Plain and Reinforced

For controlled concrete of grade M-25 and higher, requirement of cement shall be based on concrete Mix Design to be prepared by the Contractor and approved by the Enginee

FINISHING

1.	6mm thick C.P. 1:4	0.280 quintal per	10 sqm area
2.	10mm thick C.P. 1:5	0.370 quintal per	10 sqm area
3.	10mm thick C.P. 1:4	0.430 quintal per	10 sqm area
4.	10mm thick C.P. 1:6	0.300 quintal per	10 sqm area
5.	12mm thick C.P. 1:3	0.734 quintal per	10 sqm area
6.	12mm thick C.P. 1:4	0.547 quintal per	10 sqm area
7.	12mm thick C.P. 1:6	0.360 quintal per	10 sqm area
8.	15mm thick C.P. 1:4	0.655 quintal per	10 sqm area
9.	15mm thick C.P. 1:6	0.440 quintal per	10 sqm area
10.	20mm thick C.P. 1:4	0.850 quintal per	10 sqm area
11.	20mm thick C.P. 1:6	0.560 quintal per	10 sqm area
12.	12mm thick bearing plaster in CM 1:4 with neat cement finish	0.590 quintal per	10 sqm area
13.	Neat cement punning	0.200 quintal per	10 sqm area

© 2022 MECON Limited All rights reserved

14.	Flush or ruled or cut or weather pointing on brick work with CM 1:3	0.155 quintal per	10 sqm area
15	Flush or ruled or cut out or weather pointing on brick work with CM 1:2	0.200 quintal per	10 sqm area
16.	Raised and cut pointing on brick work with cement mortar 1:3	0.235 quintal per	10 sqm area
17.	Flush or ruled pointing on brick flooring with cement mortar 1:4	0.075 quintal per	10 sqm area
18.	Flush or ruled pointing on brick flooring with cement mortar 1:6	0.050 quintal per	10 sqm area
FLOORING			
1.	Brick on edge flooring in cement mortar 1:4	1.100 quintal per	10 sqm area
2.	Brick on edge flooring in cement mortar 1:6	0.800 quintal per	10 sqm area
3.	25mm thick (IPS) cement concrete flooring 1:2:4 (1 cement: 2 sand: 4 graded stone chips 12mm nominal size) finished with a floating coat of neat cement.	1.020 quintal per	10 sqm area
4.	40mm thick (IPS) cement concrete flooring 1:2:4 with 20mm and down stone chips finished with a floating coat of neat cement.	1.500 quintal per	10 sqm area
5.	25mm thick (IPS) flooring with base coat 19mm thick 1:2:4 using stone chips 10mm nominal size and 6mm topping coat 1:1 (1 cement: 1 stone chips 3mm size) with a floating coat of neat cement.	1.370 quintal per	10 sqm area
6.	40mm thick (IPS) flooring with base coat 30mm thick 1:2:4 using stone chips 10mm nominal size and10mm topping coat 1:1 (1 cement: 1 stone chips 3 to 6mm size) with a floating coat of neat cement.	2.320 quintal per	10 sqm area
	25mm thick cast-in-situ grey terrazzo flooring, under layer 19mm thick cement		

© 2022 MECON Limited All rights reserved

	concrete 1:2:4 with 10mm nominal size chips and 6mm thick topping laid in cement marble powder mix 3:1 (3 cement: 1 marble powder) by weight in proportion of 4:7 (4 cement marble powder mix: 7 marble chips) by volume.	1.370 quintal per	10 sqm area
8.	40mm thick cast-in-situ grey terrazzo flooring, under layer 30mm thick cement concrete 1:2:4 with 10mm nominal size chips and10mm thick topping laid in cement marble powder mix 3:1 (3 cement: 1 marble powder) by weight in proportion of 4:7 (4 cement marble powder mix: 7 marble chips) by volume.	1.575 quintal per	10 sqm area
9.	40mm thick cast-in-situ terrazzo flooring, under layer 31mm thick cement concrete 1:2:4 with 10mm nominal size chips and top layer 9mm thick with marble chips of size 4 to 7mm nominal size laid in cement marble powder mix 3:1 (3 cement: 1 marble powder) by weight in proportion of 4:7 (4 cement marble powder mix: 7 marble chips) by volume.		
a)	Dark or light shade pigment with grey cement	1.583 quintal per	10 sqm area
b)	Light shade pigment or without any (grey cement) pigment with white cement	1.010 quintal per (grey cement) 0.580 quintal per (white cement)	10 sqm area 10 sqm area
c)	Medium shade pigment with 50% grey cement and 50% white cement	1.295 quintal per (grey cement) 0.290 quintal per (white cement)	10 sqm area 10 sqm area
10.	40mm thick cast-in-situ terrazzo flooring, under layer 28mm thick cement concrete 1:2:4 with 10mm nominal size chips and top layer 12mm thick with marble chips of size 7 to 12mm nominal size laid in cement marble powder mix 3:1 (3 cement: 1 marble powder) by weight in proportion of 2:3 (2 cement marble powder mix: 3 marble chips) by volume.		

© 2022 MECON Limited All rights reserved

a)	Dark or light shade pigment with grey cement	1.705 quintal per	10 sqm area
b)	Light shade pigment or without any (grey cement) pigment with white cement	0.895 quintal per (grey cement) 0.810 quintal per (white cement)	10 sqm area 10 sqm area
c)	Medium shade pigment with 50% grey cement and 50% white cement	1.300 quintal per (grey cement) 0.405 quintal per (white cement)	10 sqm area 10 sqm area
d)	White cement without any pigment	0.895 quintal per (grey cement) 0.810 quintal per (white cement)	10 sqm area 10 sqm area
11.	Terrazzo cast-in-situ skirting and dado, top layer 6mm thick marble chips laid in cement marble powder mix 3:1 (3 cement: 1 marble powder) by weight in proportion of 4:7 (4 cement marble: 7 marble chips) by volume.		
(A)	18mm thick with under layer 12mm thick cement plaster 1:3		
a)	Dark or light shade pigment with grey cement	1.490 quintal per	10 sqm area
b)	Light shade pigment or without any pigment with white cement.	1.090 quintal per (grey cement) 0.400 quintal per (white cement)	10 sqm area 10 sqm area
c)	Medium shade pigment with 50% grey cement and 50% white cement	1.290 quintal per (grey cement) 0.200 quintal per (white cement)	10 sqm area 10 sqm area
(B)	21mm thick, with under layer 15mm thick cement plaster 1:3		
a)	Dark or light shade pigment with grey cement	1.640 quintal per	10 sqm area
b)	Light shade pigment or without any	1.230 quintal per	10 sqm area

© 2022 MECON Limited All rights reserved

	pigment with white cement.	(grey cement) 0.400 quintal per (white cement)	10 sqm area
c)	Medium shade pigment with 50% grey cement and 50% white cement	1.430 quintal per (grey cement) 0.200 quintal per (white cement)	10 sqm area 10 sqm area
12.	Precast terrazzo tiles 20mm thick with marble chips of sizes upto 6mm laid in 25mm thick bed of lime mortar, jointed with neat cement slurry mixed with pigment		
a)	Dark shades using grey cement	0.88 quintal per	10 sqm area
b)	Light shade using white cement.	0.44 quintal per (grey cement) 0.44 quintal per (white cement)	10 sqm area 10 sqm area
c)	Medium shade using 50% grey cement and 50% white cement	0.66 quintal per (grey cement) 0.22 quintal per (white cement)	10 sqm area 10 sqm area
13.	Precast terrazzo tiles 20mm thick with marble chips of sizes upto 6mm in skirting or on walls, laid on 12mm thick cement plaster 1:3 jointed with neat cement slurry		
a)	Dark shades using grey cement	1.395 quintal per	10 sqm area
b)	Light shade using white cement.	1.175 quintal per (grey cement) 0.22 quintal per (white cement)	10 sqm area 10 sqm area
c)	Medium shade using 50% grey cement and 50% white cement	1.285 quintal per (grey cement) 0.11 quintal per (white cement)	10 sqm area 10 sqm area
14.	White glazed tiles 5, 6 or 7 mm thick in flooring, skirting and dado on 12 mm thick cement plaster 1: 3 in base and joined with	0.942 quintal per (grey cement) 0.25 quintal per	10 sqm area 10 sqm area

© 2022 MECON Limited All rights reserved

	white cement, slurry etc.	(white cement)	
15.	Marble stone slab flooring over 20mm thick base of lime mortar 1:1:1 (1 lime: 1 surkhi: 1 sand) and jointed with white cement slurry etc.		
a)	20 mm thick / 30 mm thick / 40 mm thick	0.075 quintal per (white cement)	10 sqm area
16.	Marble stone slab flooring over 20mm thick base of cement mortar 1:4 & jointed with white cement slurry etc.		
a)	20 mm thick	1.275 quintal per (grey cement) 0.075 quintal per (white cement)	10 sqm area 10 sqm area
b)	30 mm thick	1.290 quintal per (grey cement) 0.075 quintal per (white cement)	10 sqm area 10 sqm area
c)	40 mm thick	1.310 quintal per (grey cement) 0.075 quintal per (white cement)	10 sqm area 10 sqm area
17.	Marble tiles 18 to 24 mm thick in risers of steps, skirting, dado, walls and pillars laid on 12mm thick cement mortar 1:3 (1 cement: 3 sand) and jointed with white cement slurry	1.16 quintal per (grey cement) 0.075 quintal per (white cement)	10 sqm area 10 sqm area
18.	Extra for each additional thickness of 5 mm granolithic layer of 1:2:4 for flooring	0.016 quintal per	10 sqm of area
19	12mm thick cement plaster skirting, dado risers of steps and edges of ground sink with CM 1:3 finished with a floating coat of neat cement.	0.800 quintal per	10 sqm of area
20	15mm thick cement plaster skirting, dado risers of steps and edges of ground sink		

© 2022 MECON Limited All rights reserved

	with CM 1:3 finished with a floating coat of neat cement.	0.995 quintal per	10 sqm of area
21.	19mm thick cement plaster skirting and dado with 12mm thick backing with CM 1:3 and 7mm topping 1:1 (1 cement: 1 stone chips 3mm size) finished with a floating coat of neat cement.	1.35 quintal per	10 sqm of area
22.	25mm thick cement plaster skirting and dado with 18mm thick backing with CM 1:3 and 7mm topping 1:1 (1 cement: 1 stone chips 3mm size) finished with a floating coat of neat cement.	1.85 quintal per	10 sqm of area

MISCELLANEOUS ITEMS

1.	Marble work for wall lining (Veneer work) 1.8 to 2.4 cm thick in CM 1:3 including pointing with white cement mortar 1:2 (1 white cement: 2 marble dust)	0.715 quintal per (grey cement) 0.170 quintal per (white cement)	10 sqm of area 10 sqm of area
2.	Marble work for wall lining (Veneer work) 4 cm thick in CM 1:3 including pointing with white cement mortar 1:2 (1 white cement: 2 marble dust)	1.020 quintal per (grey cement) 0.170 quintal per (white cement)	10 sqm of area 10 sqm of area
3.	Grading roof for water proofing treatment with:-		
a)	CC 1:2:4 (1 cement: 2 coarse sand: 4 stone aggregate 20mm nominal size)	3.2 quintal per	cum of Concrete
b)	CM 1:3	5.1 quintal per	cum of mortar
c)	**CM 1:4**	3.8 quintal per	cum of mortar
4.	Providing and fixing MS fan clamps of standard shape and size in existing RCC slab including cutting chase and making good.	0.016 quintal	each

© 2022 MECON Limited All rights reserved

5.	Making plinth protection 50mm thick of CC 1:3:6 (1 cement: 3 sand: 6 graded stone aggregate 20mm nominal size) over 75mm bed of dry brick ballast 40mm nominal size well rammed and consolidated and grouted with fine sand including finishing the top smooth.	1.1 quintal per	10 sqm of area
6.	Grouting with		
a)	CM 1:2	7.18 quintal per	cum
b)	CM 1:3	5.40 quintal per	cum
7.	DPC 25mm thick (1:2:4)	0.81 quintal per	10 sqm of area
8.	Making plinth protection with bricks on edge in CM 1:6 over 7.5cm bed of dry brick aggregate 40mm nominal size rammed, consolidated and grouted with fine sand and top of bricks pointed with CM 1:2.	0.86 quintal per	10 sqm of area
9.	Providing and fixing 25mm dia GI pipe outlet in CM 1:3 including cutting and making good the walls.	0.05 quintal per	10 RM
10.	Providing and fixing 40mm dia GI pipe outlet in CM 1:3 including cutting and making good the walls.	0.075 quintal per	10 RM
11.	Providing chases 75mm wide 50mm deep in walls for conduit pipe and filling the same with CC 1:3:6	0.075 quintal per	10 RM
12.	Fixing steel windows with 1:2:4 concrete blocks	0.40 quintal per	10 sqm of area
13.	Cement-sand mortar:		
a)	1:1(1cement:1sand)	10.2 quintals per	cum
b)	1:2(1cement: 2sand)	6.8 quintals per	cum

© 2022 MECON Limited All rights reserved

c)	1:3(1cement: 3sand)	5.1 quintals per	cum
d)	1:4(1cement: 4sand)	3.8 quintals per	cum
e)	1:5(1cement: 5sand)	3.1 quintals per	cum
f)	1:6(1cement: 6sand)	2.5 quintals per	cum

DRAINAGE/SANITARY & WATER SUPPLY INSTALLATIONS

1.	100mm dia AC rain water pipe I/c fittings with CM 1:2	0.725 quintal per	100 RM of pipe
2.	150mm dia AC rain water pipe I/c fittings with CM 1:2	0.82 quintal per	100 RM of pipe
3.	Fixing IWC pan with traps, pair of footrests, and flushing cistern complete	0.125 quintal	each
4.	Fixing EWC pan with trap and flushing cistern complete	0.01 quintal	each
5.	Fixing wash basin and kitchen sink	0.025 quintal	l each
6.	Fixing urinal cistern including pipes	0.025 quintal	each
7.	Fixing & finishing floor trap	0.015 quintal	each
8.	Fixing HCI pipes and specials, 100mm dia and 75mm dia including making good the walls	0.135 quintal per	10 RM of pipe
9.	Fixing GI pipes of all dia with clamps (for inside work only)	0.015 quintal per	10 RM of pipe
10.	Jointing glazed stoneware pipe with CM 1:1		
	a) 100 mm dia	2.17 quintals per	10 RM of pipe

© 2022 MECON Limited All rights reserved

	b) 150 mm dia	3.23 quintals per	10 RM of pipe
11.	Laying cement concrete 1:5:10 all round SW pipe including bed concrete as per standard design		
	a) 100mm dia SW pipe	19.24 quintals per	100 RM of pipe
	b) 150mm dia SW pipe	23.53 quintals per	100 RM of pipe
12.	Gully chamber as per specification.	0.385 quintal	each
13.	Stopcock chamber as per specification	0.185 quintal	each
14.	Inspection chambers as per specification		
	a) 600x600x600mm deep	1.43 quintals	each
	b) 750x600x600mm deep	1.435 quintals	each
	c) 900x900x600mm deep	1.885 quintals	each
15.	Extra depth of inspection chambers as per specification		
	a) 600x600mm	0.805 quintal per	RM of depth
	b) 750x600mm	1.295 quintal per	RM of depth
	c) 900x900mm	1.460 quintal per	RM of depth
	d) 1200x900mm	1.835 quintal per	RM of depth

SPECIFICATION FOR CIVIL WORKS

PART – IV DIMENSIONAL TOLERANCE

GENERAL

The materials used in construction shall, besides conforming to the specifications and standards mentioned, be the best of the existing kinds obtainable. Where a particular 'Brand' or 'Make' of material is specified such 'Brand' or 'Make' of material alone shall be used.

© 2022 MECON Limited All rights reserved

A high standard of workmanship and accuracy shall be achieved in all sections and parts of the work. The workmanship shall be in accordance with the latest and the best civil engineering practice.

The Contractor shall ensure that all sections of the work are carried out with utmost care to achieve the dimensions shown in drawings or specifications. Where special and close tolerances are required in any particular section of work, these will be shown in the drawing and such tolerances shall be met. In the absence of such specific mention in drawings the following dimensional deviations may be tolerated, provided they do not impair the appearance or render the particular section of work unacceptable to the purpose for which it is intended. Tolerance for materials and workmanship not covered in this part as mentioned hereinafter will be in accordance with the relevant IS code.

Description		***Permissible tolerance***
Building bricks, in length width and height	:	As per IS 1077
Laterite stone, in length, width & height	:	Plus or minus 5 mm
Natural building stone		
a) For stones required in ashlar masonry: Length & Breadth	:	Plus or minus 5mm
Height	:	Plus or minus 3mm
b) For stones required other than in ashlar masonry: Length & Breadth	:	Plus 5mm, minus 10mm
Height	:	Plus 5mm, minus 5mm
Concrete and reinforced concrete pipes: Length	:	Plus or minus 1% of standard length
Internal diameter, upto 300 mm	:	Plus 3 mm Minus 1.5 mm
Cast iron spigot & socket pipes and fittings:		
Length of fittings	:	Plus or minus 10mm
Length of pipe	:	Plus or minus 20mm

© 2022 MECON Limited All rights reserved

Description		*Permissible tolerance*
Thickness	:	minus 1 mm
Internal dia of socket	:	Plus or minus 3 mm
Depth of socket	:	Plus or minus 10mm
External dia, upto 75 mm	:	Plus or minus 3mm
100 mm	:	Plus or minus 3.5mm
150 mm	:	Plus or minus 4mm
Stoneware pipes, in length		
upto 75 cm	:	Plus or minus 10mm
Upto 90 cm	:	Plus or minus 15mm
In thickness of barrel and socket not exceeding 450mm	:	Plus or minus 2mm
In thickness of barrel and socket between 500 to 600mm	:	Plus or minus 3mm
Glazed tiles, length of all 4 sides	:	Plus or minus 0.8mm
Individual dimensions and thickness	:	Plus or minus 0.5 mm
Metal doors, windows and ventilators - In overall dimension	:	Plus or minus 1.5 mm
Wooden doors, windows, ventilators Overall dimension of door, window, ventilators	:	Plus or minus 3 mm
All components of shutter except glazing bar Width	:	Plus or minus 3 mm
Thickness	:	Plus or minus 1 mm
Glazing bar, width & thickness	:	Plus or minus 1 mm

© 2022 MECON Limited All rights reserved

Mild steel tubes, tubulars and other wrought steel fittings		
a) Thickness		
i) butt welded light tubes	:	Plus not limited minus 8%
medium and heavy tubes	:	plus not limited minus 10%
ii) seamless tubes	:	plus not limited minus 12.5%
b) Weight		
i) single tube (irrespective of the quantity)	:	+ 10% , - 8%
ii) for quantity of less than 150m of one size	:	+ 10% , - 8%
iii) for quantity of 150m and over of one size	:	+ 4% , - 4%
Earth work		
Finished level of site levelling in hard rock	:	Plus or minus 50mm
Finished level of site levelling except for hard rock	:	Plus or minus 100 mm
Level of pits, trenches foundations	:	Plus or minus 50mm
Concrete & Reinforced concrete		
Footings, plan dimension	:	Plus 50 mm Minus 12 mm
Eccentricity	:	0.02 times the dimension of footing in the direction limited to 50 mm
Thickness	:	Plus or minus 0.05 times the specified thickness
Foundations		

© 2022 MECON Limited All rights reserved

Deviation of planes and lines of their intersection from vertical or inclination along full height	:	Plus or minus 20 mm
Deviation of horizontal plane from horizontal line		
for 1 m of the plane in any direction	:	Plus or minus 5mm
for the whole plane	:	Plus or minus 20mm
Sizes of cross section	:	Plus or minus 8mm
Surfaces of inserts to support loads	:	Plus or minus 5mm
Length of elements	:	Plus or minus 20 mm
Equipment foundations:		
Top level of bolt	:	Plus 20mm
Top level of foundation before grouting	:	Minus 20mm
Axes of anchor bolts in plan	:	Plus or minus 5mm
Axis of foundation in either direction	:	Plus or minus 10mm
Deviation in vertical line along height	:	Plus or minus 10mm
Sizes of pits in plan	:	Plus or minus 20 mm
Sizes of steps in plan	:	minus 20mm
Levels of steps, benches and pits	:	minus 20mm
Axes of inserts in plan	:	Plus or minus 10 mm

© 2022 MECON Limited All rights reserved

Basic dimensions in plan	:	Plus or minus 10mm
Deviation of horizontal plan from horizontal line		
for 1 m of plane in any direction	:	Plus or minus 5mm
for the whole plane	:	Plus or minus 20mm
Local deviations of top surface when checked with a 2 m long straight edge	:	Plus or minus 8mm
Buildings:		
Surfaces when checked with a 2 m long straight edge	:	Plus or minus 8mm
Sizes of cross section	:	Plus 8mm Minus 0 mm
Length of elements	:	Plus or minus 20mm
Deviation from horizontal plane, for whole building	:	Plus or minus 10mm
Plumb in verticality	:	1 in 1000 of height
for columns supporting floor beams	:	Plus or minus 10mm
for framed columns linked with crane girders and beams	:	Plus or minus 10mm
Reinforced concrete walls	:	Length: Plus or minus 20mm
Flatness of surface when checked with a 2 m long straight edge	:	Plus or minus 8mm
Level of top surface to support assembled elements	:	Plus or minus 5mm
Deviation in planes and lines of intersection from vertical	:	Plus or minus 15mm
Size of cross section	:	Plus or minus 8mm

© 2022 MECON Limited All rights reserved

Placing of reinforcement:		
Length of bar upto 75 cm long (Other than straight bars)	:	Plus 3 mm Minus 5 mm
75 - 150 cm long	:	Plus 5 mm Minus 10 mm
150 - 250 cm long	:	Plus 6 mm Minus 15 mm
250 cm long and above	:	Plus 7 mm Minus 25 mm
Straight bars, all lengths	:	Plus or minus 25 mm
Spacing of bars	:	Plus or minus 5 mm
Anchor bolts:		
Shift in location in plan	:	Plus or minus 5 mm
Same, when bolts are located outside of structural columns	:	Plus or minus 10mm
Top level	:	Plus 20 mm
Threaded length	:	Plus 30 mm

		For Walls	For Pillars
Masonry			
Width	:	Plus or minus 10 mm	Plus or minus 10 mm
Shift in axes	:	Plus or minus 10 mm	--- ---
Deviation in row from horizontal line for every 10m length	:	Plus or minus 15 mm	--- ---

© 2022 MECON Limited All rights reserved

Flatness of surface when checked with a 2 m long straight edge	:	Plus or minus 10 mm	Plus or minus 5 mm
Deviation in lines separating storeys Deviation of surface from vertical and and at angles and corners	:	Plus or minus 15 mm	Plus or minus 15 mm
for 1 storey	:	Plus or minus 10 mm	Plus or minus 10 mm
for whole building	:	Plus or minus 30 mm	Plus or minus 30 mm
Dimensions of openings for doors, windows etc	:	Plus 15 mm Minus 0 mm	
Flooring, skirting, dado and plastering	:		
Insitu concrete floor	:	4 mm	
Concrete tile and mosaic, in any 3 m length	:	3 mm	
in large open area	:	15 mm	
wall tiling - surface should not vary from general plane by more than 1 in 200. Marble and such superior work, in any 2 m length	:	1.5 mm	
in any row	:	3 mm	
Plastered surfaces, flatness when checked with a 2 m long straight edge	:	3 mm	
Vertical surfaces, upto 1 storey	:	5 mm	
Over full heights	:	10 mm	

© 2022 MECON Limited All rights reserved

Metallic Inserts on assembled components length and width	:	Plus or minus 3 mm	

Road work

The levels of the sub-grade and different pavement courses should not vary from those calculated with reference to the longitudinal and cross-sections of the road as shown on the drawing beyond the tolerance given below:-

Sub-grade	:	plus or minus 25mm
Sub-base	:	plus or minus 20m
Base	:	plus or minus 15mm
Wearing course	:	plus or minus 6mm

SPECIFICATION FOR CIVIL WORKS

PART – V METHOD OF MEASUREMENT

CONTENTS

1.0 GENERAL

2.0 EARTHWORK & SAND FILLING

3.0 ANTI - TERMITE TREATMENT

4.0 CONCRETE (PLAIN & REINFORCED)

5.0 MASONRY

6.0 PLASTERING

7.0 WHITE WASHING, COLOUR WASHING & PAINTING & OTHER FINISHES.

8.0 FLOORING, PAVING & FACING WORKS

9.0 WOODWORK

10.0 METAL DOORS, WINDOWS & VENTILATORS

© 2022 MECON Limited All rights reserved

11.0 GLAZING

12.0 WATER SUPPLY, DRAINAGE, SEWERAGE & SANITATION

13.0 WATER PROOFING, DAMP PROOFING

14.0 CEILING AND LINING

15.0 ROAD WORK

1.0 GENERAL

1.1 The method of measurement of the various items of work shall be in accordance with IS: 1200 (Part 1 to 28) unless otherwise mentioned in this part or in the schedule of items or in preamble or in the specification.

1.2 If there is any contradiction in meaning between any portion of this part and that of IS:1200 (Part 1 to 28), the stipulation of this part shall prevail.

1.3 The descriptions and explanations given herein have as much forces as though they are incorporated into the description of the items themselves in the schedule of items.

2.0 EARTH WORK & SAND FILLING

2.1 General

2.1.1 Each dimension upto 25 m shall be measured to nearest 0.01 m and to nearest 0.1 m for dimensions over 25 m. Areas shall be worked out to the nearest 0.01 m2 and cubical contents to the nearest 0.01 m3.

2.1.2 Shoring and strutting shall not be measured separately unless otherwise specified.

2.1.3 Dewatering for earth work and sand filling work shall not be measured separately unless otherwise specified.

2.1.4 For classification of soils, relevant clauses of Technical specification (workmanship and other requirements) is to be followed.

2.2 Requirements for particular works

2.2.1 Site levelling

2.2.1.1 For site levelling levels shall be taken jointly before start & after completion of work and the quantity computed based on the levels.

© 2022 MECON Limited All rights reserved

Measurements shall be made only for excavation and no separate measurement for filling shall be made except where earth, borrowed from elsewhere for site levelling work, will be measured separately only for that borrowed portion of earth.

2.2.1.2 In cases where it is not possible or convenient to take measurements from excavated cuts or borrow pits, excavation shall be worked out from filling based on the levels to be taken before and after completion of works. Deduction of 10 percent will be made for voids, however for consolidated fills done through heavy mechanical means, the deduction for voids shall be 5% in place of 10%.

2.2.1.3 In exceptional cases where the quantity is measured on the lorry measurement, loose stacks, boxes or any other similar method with the approval of the Engineer the deduction for voids shall be 20 per cent from the actual quantity.

2.2.2 Excavation

2.2.2.1 Before commencing excavation of foundations for buildings and structures, the initial ground levels shall be jointly recorded. The depth of excavation and the calculation of lift shall be based on this. Normally the initial ground level shall be considered as the level of the site as handed over to the contractor. In case excavation is planned and approved to be taken up subsequent to terracing, the terrace level shall be treated as initial ground level.

2.2.2.2 Excavation of foundations, trenches, basements, pits etc., shall be measured to the dimensions shown in the excavation plan, if any, or of the lowest concrete or masonry course, as the case may be and the actual depth. Working space and slopes shall not be measured.

2.2.2.3 Excavation of rock shall be measured from stacks of excavated rock with a deduction of 50 per cent for voids or measured in the solid based on levels.

2.2.2.4 In case of following works, no measurement will be recorded for the excavation beyond drawing / specification.

(a) In work which will be covered externally with damp proof covering.

(b) In work which requires formwork.

(c) In work which requires workmen to operate from the outside and for guniting and post tensioned concrete, ground beams etc.

© 2022 MECON Limited All rights reserved

However, if there is a specific provision otherwise in the item/specification/preamble, for authorised working, it shall be measured accordingly. This working space may be 60 cm. measured from the face of the structure at lowest level, unless otherwise mentioned.

2.2.2.5 Surface Dressing

Trimming of natural ground, excavated surface and filled up area to remove vegetation and/or small in equalities not exceeding 15 cm deep shall be described as surface dressing and measured in square metres unless otherwise specified in the schedule of items/ preamble.

2.2.2.6 Lead

The distance for removal shall be measured over the shortest practicable route and not necessarily the route actually taken.

The description of the item shall include loading and unloading.

For the purpose of the measurement of the lead, the area excavated shall be divided in suitable block and for each block the distance from the centre of the block to the centre of the placed earth pertaining to this block shall be taken as lead.

2.2.3 Back filling/filling

2.2.3.1 In foundations, trenches, basements, pits, etc. and in other like areas, the measurements shall be the theoretical volume of the filling computed from drawings i.e. the volume measured under excavation minus the volume occupied by the structure and part filling if any, done otherwise.

2.2.3.2 In filling under floors the measurements shall be the theoretical volume as per drawings after deducting the part filling if any, done otherwise.

2.2.3.3 In embankments, the work shall commence only after recording jointly the initial ground levels and the measurements shall be made on the basis of finished cross section and initial ground levels. Where controlled compaction by mechanical compaction is done, 5% deduction for voids shall be made. In case controlled compaction by mechanical means is not done then deduction for voids shall be 10%.

2.2.3.4 Filling/Back filling shall not be measured separately for items of excavation, where filling/back-filling is a part of the composite item and as such is included in excavation item itself.

3.0 ANTI-TERMITE TREATMENT

© 2022 MECON Limited All rights reserved

Measurement shall be the plinth area of the ground floor of the building treated. Dimensions shall be measured to the nearest 0.01 m and area to nearest 0.01 m2.

4.0 CONCRETE (PLAIN & REINFORCED)

4.1 Concrete

4.1.1 Dimensions shall be measured to nearest 0.01 m except for the thickness of slab, which will be to nearest 0.005 m. Areas shall be worked out to nearest 0.01 m2 and cubic contents to nearest 0.01 m3.

4.1.2 The concrete shall be measured as per drawings except in the cases of approved variations which will be measured separately.

No deductions shall be made for the following:

i) Ends of dissimilar materials such as beams, rafters, purlins etc., upto 500 cm2 in cross section.

ii) Openings upto 0.1 m2 in area (In calculating area of an opening, the thickness of any separate lintel or sill shall be included in the height. No extra labour for forming such opening or voids shall be measured).

iii) Volume occupied by reinforcement or other embedments such as anchors, inserts, conduits or volume occupied by pipes, sheathing etc. not exceeding 100 sq. cm. each in cross sectional area or as specified.

iv) Small voids not exceeding 40 cm2 each in cross section.

v) Moulds, drip moulding, chamfer, splay, beds, grooves and rebates upto 10 cm in width or 15 cm in girth.

4.1.3 Columns shall be measured from top of column base to underside of first floor slab and from top of floor to underside of floor slab above thereafter. Beams shall be measured from face to face of columns and will include haunches. Depth of beam shall be measured from bottom of slab and in the case of inverted beams from top of slab. Chajjas and other cantilevers shall be measured from the face of the projection.Where vertical fins are combined with chajja, the latter shall be measured clear between fins. In case chajja is not combined with lintel, beam or slab, it shall be measured inclusive of bearing.

4.2 REINFORCEMENTS

© 2022 MECON Limited All rights reserved

4.2.1 Norms for Steel Consumption

The requirement of mild and high strength deformed bars for various works like reinforcement, guard bars, fan hooks etc. shall be calculated as mentioned below:

i) As per drawing including

(a) Authorised laps, bends, standard hooks and deviations etc.

(b) Spacer bars, chairs, hangers, supports, spacer blocks dowels etc. are to be considered for wastage only and not to be measured for payment purpose.

ii) Quantity upto 0.5% of (i) above towards unaccounted wastages, plus

iii) Quantity upto 3% of (i) above towards cut pieces, which shall be pieces below 2m. length. These cut pieces shall not be taken back even though steel has been issued by the client/owner.

4.2.2 Reinforcements shall be measured in lengths to the nearest 0.01 m for various diameters of bar and converted into weight in tonnes to the nearest kg. on the basis of standard weights as per IS: 1786. No allowance shall be made in the weight for rolling margin.

4.2.3 Authorised laps, standard hooks, bends shall be measured.

4.2.4 Sapacer bars, chairs, hangers, supports, spacer blocks and unauthorised laps etc. shall not be measured unless otherwise specified.

4.2.5 Dowels neither shown on the drawings nor instructed by the Engineer, but required for construction facilities shall not be measured for payment.

4.2.6 Modification of already embedded reinforcement, if required due to faulty fabrication or placement, shall not be measured for payment.

4.2.7 The measurements of reinforcements (including authorised laps, hooks, bends) shall be taken only from Bar bending lists or from the drawings except in the cases of approved variations which will be measured as per 4.2.2.

4.2.8 Wire netting and fabric reinforcement shall be described (including meshes and wire/strands) and measured in square metre, unless otherwise specified in the schedule of item. Authorised laps shall be measured. Raking or circular cutting and waste shall be included in the description of item.

© 2022 MECON Limited All rights reserved

4.2.9 Hoop iron shall be fully described and measured in running metres unless otherwise specified in the schedule of item.

4.2.10 Binding wire for the reinforcement shall not be measured separately and shall be included in the item of reinforcement.

4.3 ADMIXTURE

Admixture will be measured separately as specified or on the basis of the requirement as approved by the Engineer.

4.4 FORMWORK

Each dimension shall be measured to the nearest 0.01 m and area to the nearest 0.01 sq.m.

4.4.1 Formwork shall be measured as the actual surface in contact with concrete and paid in sq.m. unless included in the rate for concrete in specific item of work.

4.4.2 All the measurements shall be computed from the drawings except in the cases of approved variations which will be measured separately.

4.4.3 Formwork shall not be measured separately for precast concrete work, grouting and damp proof course which shall be included in the concrete rates.

4.4.4 No measurement for formwork in construction joints shall be made.

4.4.5 Openings upto 0.1 sq.m. shall be neglected, as if non - existent, for the purpose of formwork measurement.

4.4.6 No extra measurement or payment shall be made for making the form work water proof or for supports, scaffolding, staging, centering, approaches etc.

4.4.7 No measurement shall be taken for the formwork in pockets, openings, chambers, chases etc., in concrete if the cross sectional area is less than or equal to 0.1 sq.m. in each case. If the cross section area of any opening exceeds 0.1 sq.m. the actual area of the formwork shall be measured for payment.

4.5 EMBEDDED PARTS

4.5.1 These shall be measured on the basis of standard theoretical weight of the complete insert according to the drawing/direction.

© 2022 MECON Limited All rights reserved

4.5.2 Embedded steel, which are the integral parts of the embedment according to drawing and are required for anchoring the embedded parts in concrete shall be measured on the basis of the theoretical standard weight. In case of anchor bolts the theoretical weights of the nuts, lock nuts, check nuts and washers shall be added in the measurement for payment.

4.5.3 All bye-works such as jigs, fixtures, templates and other arrangements which are not integral parts of the embedded parts, but necessary to secure those (embedded parts) in position shall not be measured for payment.

4.5.4 Anti-corrosive paint over the exposed surfaces and protection of the anchor bolts with grease tc., shall not be measured for payment.

4.5.5 Modification works necessary to rectify the mistake of already placed embedded parts shall not be measured.

4.6 GROUTING

4.6.1 Grouting shall be measured in volume except in the cases of grouting by special cement compound or epoxy compound which will be measured by number.

4.6.2 Measurement shall be computed from the drawings except in the cases of approved variations which shall be measured separately and subsequently added to or deducted from.

4.6.3 Necessary formwork shall not be measured for payment.

4.7 DAMP PROOF COARSE

4.7.1 Measurement shall be in sq.m. stating thickness and computed from the drawings except in the cases of approved variations which will be measured separately.

4.7.2 Necessary formwork shall not be measured for payment.

5.0 MASONRY

5.1 Dimensions shall be measured to nearest 0.01 m, areas to nearest 0.01 m2 and cubic contents to nearest 0.01 m3.

5.2 No deduction shall be made for:

(i) Ends of dissimilar materials such as joints, beams, posts, girders, trusses, lintels, purlins etc., upto 0.1 m2 in section.
ii) Openings upto 0.1 m2 in area.

© 2022 MECON Limited All rights reserved

(iii) Wall plates, bed plates, bearing of slab etc., thickness not exceeding 10 cm. and bearing not extending over the full thickness of wall.

(iv) Cement concrete blocks for holdfasts and the like.

(v) Iron fixtures such as pipes etc. upto 300 mm. dia. and hold fasts for doors and windows.

5.3 Dressed stonework such as in sills, cornices , column caps, copings etc., shall be measured as the smallest rectangular block from which the finished stone can be worked.

5.4 Honeycomb openings shall not be deducted from the area of honeycomb brickwork.

5.5 Brickwork of full brick width or more shall be measured in cu.m. while of thickness of half brick or less shall be measured in sq.m., unless otherwise specified.

5.6 Reinforcements for reinforced brick work shall be measured separately, unless otherwise specified and no deduction for reinforcement shall be made from brickwork.

6.0 PLASTERING & POINTING

6.1 All plastering and pointing shall be measured in sq.m. unless otherwise described. Dimensions shall be measured to nearest 0.01 m and areas to 0.1 sq.m.

6.2 Ceiling shall be measured between walls or partitions (dimensions before plastering) shall be taken. Measurement of wall plastering shall be taken between walls or partitions for length (dimension before plastering) and from top of floor or skirting to ceiling for height.

6.3 The methods of measurement including the deductions for openings etc., shall be according to the relevant part of IS: 1200 (Part 1 to 28).

7.0 WHITE WASHING, COLOUR WASHING, PAINTING & OTHER FINISHES.

The method of measurement shall be according to the relevant part of IS: 1200 (Part 13 & 15) .

8.0 FLOORING, PAVING & FACING WORKS

© 2022 MECON Limited All rights reserved

8.1 The work shall be measured as a complete finished item including necessary underbed, adhesives, dividing strips, joint sealing and necessary grinding, polishing and finishing where specified. The subgrade or the base course shall be measured separately against respective item unless otherwise specified.

8.2 All works shall be measured net, dimensions being measured to nearest 0.01 m and areas to nearest 0.01 sq.m. Any opening less than 0.1 sq.m. in area shall not be deducted nor any extra payment made for that.

8.3 Building paper or water proofing by bituminous felts/mastic asphalt treatment, where specified to be laid below floor, shall be measured separately for payment unless otherwise specified.

8.4 Laps and seams in sheet finishing (linoleum, cork, PVC, rubber & like) shall be deemed to be included in the item itself even if not described explicitly and shall not be measured and paid separately.

9.0 WOODWORK

9.1 All work shall be measured net for finished dimensions as fixed, that is no extra measurement or allowance shall be made for shape, joints, wastage etc. subject to specific provision made in the IS: 1200 (Part 21) and for dimensions supplied beyond those specified in the drawing.

9.2 Wooden frame

rought, finished and fixed shall be measured net for overall length nearest to 0.01 m, width and thickness to the nearest 2mm or as specified in the drawing and cubic contents calculated in cubic metres to the nearest three places of decimals.

Wooden shutters of all types

Length and width of the shutters shall be measured net as fixed to the nearest cm. in closed position covering the rebates of the frame but excluding the gap between the shutter and the floor and the area calculated in square metre upto two places of decimal.

Over lap of two leaves of shutter shall not be measured separately.

Hand rails

Hand rails of finished width and depth as specified in the item shall be measured in running metres upto two places of decimal.

© 2022 MECON Limited All rights reserved

9.3 Painting and polishing, unless otherwise described in the schedule of items, shall be measured separately for payment.

9.4 Builder's hardware and fittings for doors windows and ventilators shall be measured separately, unless stated otherwise in the Schedule of Items. Hardware and fittings shall be measured according to IS: 1200 (Part-VII) .

9.5 Hold fasts for door, window and ventilator frames shall be measured separately.

9.6 Timber Partitions

This shall be measured in area calculated in sq. m. to the nearest two places of decimal.

9.7 Glazed shutters and glazed partitions (Wooden)

Glazed shutters/glazed partitions with wooden frames shall be measured as a single item in area calculated in sq.m. to the nearest two places of decimal. No separate measurement for glazing/glass panes shall be made.

9.8 Provision of making holes/opening/chases in masonry/ concrete flooring etc. for fixing and making good of the same shall not be measured separately for payment.

9.9 Bitumen painting or approved wood preservative of the timber surfaces in contact with masonry/concrete floor etc. shall not be measured for payment.

10.0 METAL DOORS, WINDOWS & VENTILATORS

10.1 Door, window and ventilator/louvers as fixed, shall be measured net as clear width between jambs and clear height between floor/sill and underside of lintel, but excluding the gap between door shutters and floor. Dimensions shall be calculated to the nearest 0.01 m., area calculated in sq.m. upto two places of decimal.

10.2 For MS collapsible shutter/gate, rolling shutter sliding folding door, length and breadth shall be measured to the nearest cm. for the clear area of opening as per drawing in which they are installed and calculated in sq.m. to the nearest two places of decimal.

10.3 M.S. Rolling grills, doors of steel plate, sliding door louvered ventilators, gates, grills, as fixed, shall be measured and computed to weight from the size as per drawing unless otherwise specified.

© 2022 MECON Limited All rights reserved

10.4 Glazed doors, windows, louvers, partitions (both steel and aluminium) shall be measured in sq.m. to the nearest two places of decimal. No separate measurement for glazing/glass panes shall be made for payment.

11.0 GLAZING

11.1 Glazing shall not be separately measured for doors, windows and ventilators unless otherwise specified.

11.2 North light and roof glazing shall be paid as the area from outside to outside of glazing including frames, to the nearest 0.01 sq.m.

11.3 Glazing, where shown in the schedule of items as a separate item, shall be measured from edge to edge of glass as fixed.

12.0 WATER SUPPLY, DRAINAGE, SEWERAGE & SANITATIONS

12.1 All the pipelines buried under soil/masonry/floors/ concrete, laid over/underground/along masonry/along under floor shall be measured in metres along the centreline together with fittings/specials upto two places of decimal against respective schedule of items for different diameter (the diameter as specified shall mean nominal bore except PVC pipe) unless otherwise specified.

12.2 All necessary earth work in trenches for laying pipe lines including dewatering, levelling and trimming to the gradient, sand filling in the trenches before laying the pipe, back filling either by sand or by approved borrowed soil after laying the pipe lines including necessary compaction by spraying water and levelling/dressing the same shall not be measured separately for payment unless otherwise specified.

12.3 All required specials, i.e. bends tees, shoes cowls, plug, elbows, unions, caps, checkout and the like excluding valves shall not be measured separately for payment unless otherwise specified.

12.4 All fixing and supporting arrangement of the pipes like the supports, saddles, brackets, clamps, cleats, covering the pipes with concrete in case of pipes laid over ground, special arrangement for supporting the pipe like while coming out from the building to the trenches etc. shall not be measured separately for payment, unless otherwise specified.

12.5 All the arrangement in road crossing like cutting the road, diverting the road and drains, concealing the pipes with suitable approved measures, backfilling the area, covering and making good of the road with similar

© 2022 MECON Limited All rights reserved

materials/design shall not be measured separately for payment, unless otherwise specified.

12.6 Septic tanks, inspection pits, manholes etc., shall be considered as a composite single item including excavation, dewatering, concrete, masonry, back filling, protection of other service lines and all the like works unless otherwise specified.

12.7 All the valves and all the bathroom/W.C./Kitchen fixures like bib tap, stop cock, shower, all sanitary wares, towel rails, mirrors etc., shall be measured separately under respective item in the schedule, unless otherwise specified.

13.0 WATER PROOFING, DAMP PROOFING

13.1 Water proofing for roofs

13.1.1 Length and breadth shall be measured in metre upto two places of decimal and area calculated in sq.m. upto two places of decimal.

13.1.2 Measurement shall be made for the net covered area. No measurement shall be made for overlapping for end and side joints and for bends around/along the corners, ends and for special treatment around pipes, rain water gulleys, steel structure and the like etc. No deduction shall be made in the measurement for the opening of area less than 0.1 m2 each and no extra payment shall also be made for any special works made around such openings.

13.1.3 Water proofing treatment shall be considered as a single composite item including priming painting coat, water proofing felts, binding bituminous coats, top bituminous coat and pea size gravel or sand finishing etc.

13.1.4 For lime concrete terracing the consolidated thickness shall be considered for measurement.

13.2 For Water proofing treatment in basement

13.2.1 With bituminous felts

13.2.1.1 Length and breadth shall be measured in metre upto two places of decimal and area calculated in sq.m. utp two places of decimal.

13.2.1.2 Measurement shall be made for the net covered area. Measurement shall be made from the drawing, except in certain special cases where it is impossible to compute from drawing and the measurement shall be made

© 2022 MECON Limited All rights reserved

as executed. No measurement shall be made for overlaps, special measures around projected pipes, sealing the bends/rounds and in other cases, necessary projection/ overlap for the connection between vertical and horizontal junction etc.

13.2.1.3 Water proofing treatment shall be considered as a single composite item, including priming painting coat, water proofing felts, binding bituminous coats and top bituminous coat etc.

13.3 Mastic Treatment

13.3.1 Length and breadth shall be measured in metres upto two places of decimal and area calculated in sq.m. upto two places of decimal.

13.3.2 Measurement shall be made for the net covered area. No deduction in measurement shall be made for opening of area upto 0.1 sq.m. each and no extra payment shall be made for any special treatment around such openings. No measurement shall be made for extra payment for the special works necessary for junctions, corners, roundings, bends for the works around pipes and the like.

14.0 CEILING & LININGS

14.1 Dimensions shall be measured to the nearest 0.01 m., areas to be worked out to the nearest 0.01 sq.m.

14.2 Work formed to circular surfaces shall be measured separately unless otherwise specified.

14.3 All work unless otherwise described shall be measured as flat in sq.m.

14.4 No deduction in measurement shall be made for openings not exceeding 0.4 sq.m. and no extra measurement shall be made for forming such openings.

15.0 ROAD WORK

15.1 Dimensions shall be measured to nearest 0.01 m. Where the thickness is less than 20 cm., it shall be measured to nearest 0.005 m. Areas shall be worked out to nearest 0.01 sq.m. and cubic contents to the nearest 0.01 cu.m.

15.2 Where thickness is measured, it shall be the minimum thickness after compaction.

© 2022 MECON Limited All rights reserved

15.3 Cement concrete bases and roads shall be measured either in sq.m. or cu.m. as specified.

15.4 Unless otherwise specified, expansion and dummy joints shall be described and measured separately and given in running metres stating the thickness and depth of the joints.

SPECIFICATION FOR CIVIL WORKS

PART – VI SAFETY REQUIREMENTS FOR CONSTRUCTION WORKS

1.0 GENERAL

This specification deals with the subject matter of safety and protection to be observed in the Civil Construction. This shall be followed along with all related statutory requirements/obligation including Governmental byelaws, codes, ordinance of local or central authorities related to the construction work.

In case of complicated work like deep excavation, intricate shuttering and formwork, excavation in loose soil and below water table, stacking of excavated earth etc., work plan with necessary drawings and documents have to be prepared by the Contractor and got approved by the Engineer.

Necessary reference shall be made to the following Indian Standard Codes on safety requirements for various type of work:

Indian Standard

4081	Blasting & Drilling.
5916	Construction with Hot Bituminous Materials.
4130	Demolition of Buildings.
3764	Excavation Work

© 2022 MECON Limited All rights reserved

5121 Piling & Other Deep Foundations.

4014 - (P-II) Scaffolding, Steel Tubular.

3696 - (P-I & P-II) Scaffolds and Ladders.

6922 Structures Subject to Underground Blasts.

4756 Tunneling Work.

5499 Underground Air-raid Shelters in Natural Soil.

4138 Working in Compressed Air.

7293 Working with Construction Machinery

8989 Erection of Concrete Framed Structures.

2.0 BLASTING

2.1 Detonators and other explosive for blasting shall be taken to the blasting area in the original container or any separate non-metal container. This shall not be carried loose or mixed with other materials. Detonators and explosives must be kept separately.

2.2 No shot for blasting shall be fired except by persons licensed to do so.

2.3 Drilling shall not be resumed after a blast has been fired unless a thorough examination has been made to make sure that there is no unexploded charge.

2.4 Before firing a shot, sufficient warnings by means of whistling and/or otherwise shall be given to get men off the danger area. Blasting areas shall be cordoned off & red flags during day time and red lights during night time displayed prominently marking off the cordoned area.

2.5 All people except those who have actually to light the fuses must be removed to a safe distance of not less than 200 metres as a rule.

2.6 Wherever possible, blasting mats should be used.

2.7 Contractors doing blasting work must have licence and an approved magazine to store explosives.

2.8 Blasting operations shall be carried out during fixed hours of the day which shall be notified in writing.

© 2022 MECON Limited All rights reserved

2.9 Provisions in explosives Rules 1940 as amended from time to time, Indian Explosives Act 1844 (IV of 1884), and others shall be strictly followed.

3.0 EXCAVATIONS

3.1 Sides of all excavations must be sloped to a safe angle, not steeper than the angle of repose of the particular soil. If it is not possible to give a proper slope, the sides of the excavation where there is a danger of fall or dislodgement of earth or any material, shall be securely supported by timber or other type of shoring.

3.2 No excavation or earth work below the foundation level of an adjoining building shall be taken up unless adequate steps are taken to prevent damage to the existing structure or fall of any part.

3.3 Every accessible part of an excavation, pit or opening in the ground into which there is a danger of persons falling shall be suitably fenced with a barrier upto a height of one metre suitably placed from the edge of the excavation as far as practicable.

3.4 No material or load shall be placed or stacked near the edge of the excavation or opening in the ground. The excavated material shall not be placed within 1.5 m of the trench or half of the depth of the trench whichever is more.

3.5 Cutting shall be done from top to bottom. No undercutting of sides of excavation shall be allowed.

3.6 All narrow trenches 1.2 m or more depth, shall at all times be supplied with atleast one ladder for each 30m in length or fraction thereof. Ladder shall be extended from bottom of the trench to atleast one metre above the surface of the ground. The side of the trenches which are 1.5 m or more in depth shall be stepped back to give suitable slope, or securely held by planking, strutting and bracing so as to avoid the danger of side collapse.

3.7 Materials shall not be dumped against existing walls or partition to a height that may endanger the stability of the walls.

3.8 While withdrawing piled materials like loose earth, crushed stone, sand, etc., from the stock piles, no over hanging shall be allowed to be formed in the existing dump.

3.9 No material on any of the sites of work shall be so stacked or placed as to cause danger or inconvenience to any person or public or any other agency at work.

© 2022 MECON Limited All rights reserved

4.0 DEMOLITION

4.1 On every demolition job, danger signs shall be conspicuously posted all round the structure and all doors, openings giving access to the structure shall be kept barricaded or marked except during the actual passage of workmen or equipment. However, provision shall be made for at least two independent exits for escape of workmen during any emergency.

4.2 During night, red lights shall be placed on or about all the barricades.

4.3 Where in any work of demolition it is imperative, because of danger existing to ensure that no unauthorised person shall enter the site of demolition outside working hours, a watchman should be employed. In addition to watching the site he shall also be responsible for maintaining all notices, lights and barricades.

4.4 All the necessary safety appliances as per IS ;4130 shall be issued to the workers and their use explained. It shall be ensured that the workers are using all the safety appliances while at work.

4.5 The removal of a member may weaken the side wall of an adjoining structure and to prevent possible damage, these walls shall be supported until such time as permanent protection is provided. In case any danger is anticipated to the adjoining structure the same shall be got vacated to avoid any danger to human life.

4.6 The power on all electrical service lines shall be shut off and all such lines cut or disconnected at or outside the property line, before the demolition work is started. Prior to cutting of such lines the necessary approval shall be obtained from the electrical authorities concerned. The only exception will be any power line required for demolition work itself.

4.7 All gas, water, steam and other service lines shall be shut off and capped or otherwise controlled at or outside the building line, before demolition work is started.

4.8 All the mains and meters of the building shall be removed or protected from damage.

4.9 If a structure to be demolished has been partially wrecked by fire, explosion or other catastrophe, the walls and damaged roofs shall be shored or braced suitably.

© 2022 MECON Limited All rights reserved

4.10 Walkways and passage ways shall be provided for the use of the workman who shall be instructed to use them and all such walkways and passageways shall be kept adequately lighted, free from debris and other materials.

4.11 All nails in any kind of lumber shall be withdrawn, hammered or bent over as soon as such lumber is removed from the structure being demolished, and placed in piles for future cleaning or burning.

4.12 All the roads and open area adjacent to the work site shall either be closed or suitably protected.

4.13 No electric cable or apparatus which is liable to be a source of danger or a cable or apparatus used by the operator shall remain electricity charged.

4.14 All practical steps shall be taken to prevent danger to persons employed from risk of fire or explosion or flooding. No floor, roof or other part of the building shall be so overloaded with debris or materials as to render it unsafe.

5.0 VEHICLE

5.1 No person shall board any vehicle or equipment when it is in motion.

5.2 Suitable blocks shall be placed against the wheels of a vehicle when it is used for tipping materials into excavation or a pit or over the edge of any embankment or earthwork to avoid the danger of its running over the edge.

5.3 All workers shall stand clear of the vehicle while it is dumping. If the material being dumped is very heavy or sticky, dump hooks shall be used or dumper shall be clamped to prevent any danger of its tripping.

5.4 Materials shall not be allowed to be loaded in a vehicle so as to project horizontally beyond the sides of the body of the vehicle. All materials projecting beyond the front or rear shall be indicated by a red flag in the day and with red light in the night.

5.5 Driver of the truck or any heavy vehicle shall not reverse it unless assisted by a signal man who shall have a clear view of the driver and the area beyond the truck during reversing operation.

5.6 Maximum speed of a heavy vehicle must not exceed 15 km. per hour.

6.0 SCAFFOLDING, GANGWAYS, LADDERS & SHUTTERING

© 2022 MECON Limited All rights reserved

6.1 For all work that cannot be done from the ground level or from part of any permanent structure or from other available means of support, soundly constructed scaffoldings of adequate strength shall be used as a safe means of access to places of work.

6.2 All scaffolding shall be securely supported or suspended and wherever necessary be properly braced to ensure stability.

6.3 Chains, ropes or other lifting materials used for the suspension of scaffoldings must be of adequate strength and shall be of tested quality.

6.4 All such chains and ropes used for the suspension of scaffoldings shall be properly fastened to safe anchorage points.

6.5 The platform of a suspended scaffolding shall be sufficiently wide. Suspended scaffolding shall have hand rail on 3 sides of about 1.0 m height.

6.6 All working platform and stages from which workers are liable to fall shall be of adequate width depending on the type of work done and closely boarded and planked.

6.7 Scaffolding or staging more than 3.5 m above the ground or floor, suspended from an overhead support or erected with stationary support shall have a guard rail properly attached, bolted, braced and otherwise secured atleast 1 m high above the floor or platform of such scaffolding or staging and extending along the entire length of the outside ends thereof with only such opening as may be necessary for the delivery of materials. Such scaffolding or staging shall be so fastened as to prevent it from swaying from the building or structure. The platform shall also be provided with toe boards of atleast 150 mm high so placed as to prevent the fall of materials and tools from there.

6.8 All platforms or gangways, runways and the stairs shall be kept free from unnecessary obstructions, materials or junk.

6.9 Working platforms, gangways & stairways shall be so constructed that they shall not sag unduly or unequally, and if the height of the platform or the gangway or the stairway is more than 3.5 m above ground level or floor level they shall be closely boarded, shall be of adequate width and shall be suitably fenced.

6.10 Every opening in the floor of a building or in a working platform shall be provided with suitable fencing or railing whose minimum height shall be 1 m to prevent the fall of persons or materials.

© 2022 MECON Limited All rights reserved

6.11 Every ladder shall be securely fixed at top and bottom. A ladder more than 5 m long shall have a prop.

6.12 All ladders used shall be of good construction, sound materials and adequate strength. Ladders with defective or missing rungs shall not be brought into use. The spacing of rungs shall not exceed 30 cms and these shall be recessed atleast 12 mm into rails.

6.13 All ladders or rungs used for vertical height of more than 10 m shall have an intermediate landing. All such intermediate landings shall be provided with guard rails to a height of atleast 1 m.

6.14 Every ladder shall be securely placed so that it cannot move either at the top or at the bottom and it shall rise to a height of atleast 1.2 m above the place of landing.

6.15 No portable single ladder shall be over 8 m in length.

6.16 Spacing between the side rails of the ladder shall not be less than 300 mm for ladders upto 3 m in length. For longer lengths, this shall be increased at 6 mm for each additional 0.3 m of length.

6.17 Metal ladders must not be used for electrical work or near electric circuit of equipments.

6.18 All scaffolds, ladders and other safety devices mentioned or described herein shall be maintained in safe condition and no scaffold, ladder or equipment shall be altered or removed while it is in use.

6.19 Unfinished scaffolding which is under construction shall be prominently marked as unsafe and any access points shall be closed.

6.20 All Planking and Decking on walkways and scaffolds should be adequately supported at each end of the plank and intermediately if necessary. Planks should not be allowed to cantilever beyond the last support but should be overlapped if necessary on to the next plant.

6.21 Shuttering

The above remarks shall be applicable for this also. Shuttering, particularly for slabs, should be treated as a scaffold. Unfinished shuttering should be marked as dangerous similarly the finished formwork should be adequately supported, care being taken to avoid trap door effects.

7.0 MOBILE LIFTING APPLIANCES

© 2022 MECON Limited All rights reserved

7.1 No mobile lifting appliances shall used on a sloping surface unless adequate precautions are taken to ensure stability.

7.2 Adequate precautions shall be taken to see that jib of the mobile crane does not come in contact with overhead electric transmission line.

7.3 Only one person shall give signals to the operator of mobile lifting appliances.

7.4 Maximum load to be lifted by lifting appliances shall be marked in a position where it can be clearly seen by the crane driver and the operator.

7.5 No load shall be raised, lowered or suspended from a chain or rope having a knot in any of the part.

7.6 No chain which is joined to another chain by means of bolt and nut shall be used for raising, lowering or suspending any load.

7.7 All chains, ropes and lifting gears shall be carefully examined and tested by a competent Maintenance Engineer atleast once in every quarter.

7.8 When the work is stopped or when the mobile lifting equipment is not in operation, the boom must be lowered to the horizontal position and tied securely in place to prevent accidental drop.

7.9 No person shall walk under a load which is swinging by a lifting equipment.

Guide rope must be attached to the load to prevent its swinging.

7.10 The foot blocks of the crane before starting work shall be securely supported and firmly anchored to prevent its movement in any direction.

7.11 Use of Hoisting machines and tackle including their attachments, anchorage and supports shall conform to the following standards of condition.

7.11.1 These shall be of good mechanical construction, sound material and adequate strength and free from defect and shall be kept in good working order.

7.11.2 Every rope used in hoisting or lowering materials or as a means of suspension shall be of durable quality and adequate strength and free from patent defects.

© 2022 MECON Limited All rights reserved

7.11.3 Every crane driver or hoisting appliance operator shall be properly qualified and no person under the age of 21 years shall be in charge of any hoisting machine or give signals to the operator.

7.11.4 In case of every hoisting machine and every chain ring hook shackle swivel and pulley block used in hoisting or lowering or as means of suspension the safe working load shall be ascertained by adequate means, every hoisting machine and all gears referred to above shall be plainly marked with the safe working load. In case of hoisting machine having a variable safe working loading, each safe working load of the conditions under which it is applicable shall be clearly indicated. No part of any machine or of any gear referred to above in this paragraph shall be loaded beyond the safe working load except for the purpose of testing. Mobile cranes shall have the working load and the radius of jib for the load marked on it.

7.11.5 The top pulley for hoisting a load shall be opened monthly and the spindle inspected to see if any undue wear has taken place and for greasing.

7.11.6 In case of departmental machine, the safe working load shall be notified by the Engineer concerned. As regards contractor's machines the Contractor shall notify the safe working load of the machine to the Engineer whenever he brings any machinery to site of work and get it verified by the Engineer concerned.

7.12 Motors, gearing, transmission, electric wiring and other dangerous part of hoisting appliances shall be provided with efficient safeguards. Hoisting appliances shall be provided with such means as will reduce to the minimum, the risk of accidental descent of the load. Adequate precautions shall be taken to reduce to the minimum, risk of any part of a suspended load becoming accidentally displaced.

8.0 RIVETTING, WELDING & GAS CUTTING & STEEL ERECTION

8.1 Rivetting

8.1.1 Bolts covered with wet or slippery compounds shall not be used in fabricating structural work.

8.1.2 The rivet heater must keep the rivet heating equipment as near as possible to the place of work.

8.1.3 A pail of water shall always be kept ready for quenching fire when stopping rivetting work.

8.1.4 Hot rivet shall not be thrown across aisles and shaftways.

© 2022 MECON Limited All rights reserved

8.1.5 Metal buckets for catching hot rivets must have false wooden bottoms to prevent rivets from rebounding.

8.1.6 All rivets, bolts, nuts, and other tools must be kept in boxes and not left loose, (For any further safety measures relevant Indian Standards and safety specifications of structural section shall be referred to).

8.2 Welding & Gas Cutting

8.2.1 All cylinders must be used and stored in upright position only.

8.2.2 Cylinders must be stored away from open flames and other source of heat.

8.2.3 Oxygen cylinders must not be stored near other cylinders containing gas or oil, grease or other combustible materials.

8.2.4 While the cylinder is in use, the cylinder valve key or wrench must be placed on the valve spindle.

8.2.5 Before a cylinder is moved, the cylinder valve must be closed.

8.2.6 Gas cutting torches must be lighted by means of friction flames or similar other methods and not with matches.

8.2.7 When torches are being changed or welding stopped for some time valves for all cylinders must be closed.

8.2.8 The coloured lenses used for welding or gas cutting must be of proper shade for the work being done.

8.2.9 Suitable eye protection equipment such as goggles, hand shields etc., must be used by persons engaged in welding or gas cutting operations.

8.2.10 Before any heavy structural member is gas cut, make sure that it is cleared and supported by ropes, cables, chains or any other means to prevent its dropping or swinging.

8.2.11 Cylinder valves and connections are not to be lubricated. All oily or greasy substances must be kept away from cylinders.

8.2.12 Substantial and incombustible screen must be used below or near the welding operations, if there is a possibility of a spark falling on other workmen engaged in work closely.

8.2.13 All air pipe lines and air hoses must be frequently inspected. Air hoses shall not be used for dusting or for cooling purposes.

© 2022 MECON Limited All rights reserved

8.3 Steel Erection

8.3.1 All persons shall stand clear when a crane is sorting or shifting steel girders or other structural materials.

8.3.2 No person shall stand, walk or work beneath any suspended load.

8.3.3 Guide rope must be used for guiding lifting loads.

8.3.4 When guiding a beam or fabricated structure or erection it shall be so held that the employees hands do not get jammed against other objects.

8.3.5 Safety belts equipped with suitable life lines must be used by persons working at heights and standing on structural members. Life line must be tied to an independent support. For any further safety measures, for Structural Steel Works, IS: 7205 shall be referred to.

9.0 SAFETY APPLIANCES

9.1 Workers employed on mixing asphaltic materials, cement and lime mortars, shall be provided with protective footwear and protective goggles.

9.2 Those engaged in white washing and mixing or stacking of cement bags or any materials which is injurious to the eyes, shall be provided with protective goggles.

9.3 Those engaged in welding works shall be provided with welder's protective eye-shields.

9.4 Stone breakers shall be provided with protective goggles and protective clothing and seated at sufficiently safe intervals.

9.5 When workers are employed in sewers and manholes which are in use, the Contractor shall ensure that the manhole covers are opened and chambers are ventilated at least for an hour before the workers are allowed to get into the manholes, and the manholes so opened shall be cordoned off with suitable railing and provided with warning signals or boards to prevent accident to the public.

9.6 The Contractor shall not employ men below the age of 18 and women on the work of painting with products containing lead in any form. Whenever men above the age of 18 are employed on the work of lead painting the following precautions shall be taken:

9.6.1 No paint containing lead or lead products shall be used except in the form of paste or ready made paint.

© 2022 MECON Limited All rights reserved

9.6.2 Suitable face mask should be supplied for use by them when paint is applied in the form of spray on a surface having lead paint dry rubbed and scraped.

9.6.3 Overalls shall be supplied by the Contractors to the workmen and adequate facilities shall be provided to enable the working painters to wash during the cessation of work.

9.7 The workers going into inspection chamber shall have gas masks, gum boots and rubber gloves while working inside. After coming out they shall have some disinfectant from the first aid box for proper washing

9.8 All necessary personnel safety equipment such as safety helmets, safety boots, safety belts, leather gloves for welders, clear glass safety goggles etc., as considered adequate by the engineer have to be kept available for the use of persons employed at the site of work and maintained in condition suitable for immediate use and Contractor shall take steps to ensure proper use of equipment by the workers.

9.9 All the persons entering the tunnel shall be provided with protective wear, such as helmets, steel toe safety shoe, gum boots or other suitable type of protective foot wear. In the case of steeply inclined tunnels and inshafts, safety belts shall also be provided.

9.10 Sign boards 1 x 1.5 m in size with the following wording shall be erected at the access to these areas. "CONSTRUCTION AREA, HELMET REQUIRED BEYOND THIS POINT"

9.11 No loose garments or ragged clothing shall be worn by the personnel engaged in tunneling operation.

9.12 A telephone system shall provided to ensure a positive and quick method of communication between all control location inside tunnel and portal of the tunnels when longer than 500 m and for shafts when longer than 50 m

9.13 Irrespective of length and bends in the tunnel, arrangements shall be made for transmitting of warning signals by any one of the following means.

9.13.1 By electrically operated bells, operated by battery/dry cells with the bell placed outside the tunnel and the position of the switch shifting with the progress of the tunneling work. The position of the operating switch although temporary shall be so chosen as to ensure proper accessibility and easy identification.

9.13.2 By the use of two field (magnet type) telephone.

9.13.3 Any other suitable arrangement like walkie-talkie.

© 2022 MECON Limited All rights reserved

9.14 Arrangement for rendering prompt and adequate first aid to the injured persons shall be maintained at every work site under the guidance of a medical officer-in-charge of the project. Depending upon the magnitude of the work the availability of an ambulance at a very short notice (at telephone call) shall be ensured.

9.15 First-aid arrangements commensurate with the degree of hazard and with the number of workers employed shall be maintained in a readily accessible place throughout the working hours. At least one experienced first-aid attendant with his distinguishing badge shall be available on each shift to take care of injured persons. Arrangements shall be made for calling the medical officer, when such a need may arise. It is recommended that foreman/assistant foreman/supervisor/ permanent workmen who are normally present at each working phase in each shift are given adequate training on first-aid methods to avoid employment of a separate attendant.

9.16 Stretchers and other equipment necessary to remove injured persons shall be provided at every shift.

9.17 Where there are more than 50 persons working in a shift, effective artificial respiration arrangements shall be provided, with trained men capable of providing artificial respiration.

10.0 ELECTRICAL

10.1 Only authorised persons shall handle or otherwise interfere with electrical equipment. Any person detecting electrical apparatus being handled by an unauthorised person or equipment in unsafe condition must report the matter to the Engineer concerned.

10.2 No person shall work on any live electric conductor or apparatus and no person shall assist such person on such work, unless he is authorised in that behalf.

10.2.1 After isolating the equipment from the source of supply before the work begins, a sign 'DON'T SWITCH ON' must be hung on or near the switch to avoid its being accidentally or inadvertently switched on when persons are working.

10.2.2 Take out the fuses and keep in safe custody.

10.2.3 The switch may be locked if locking arrangement exists.

10.2.4 Earth the equipment, before work, to discharge it and short the terminals as a precautionary measure against accidental switching ON.

© 2022 MECON Limited All rights reserved

10.2.5 After the work is finished take out Earthing and shorting link.

10.2.6 Remove all tools and materials from the site of work. Replace the fuses and unlock the switch.

10.2.7 The switch shall only be put 'ON' by the person who switched it 'OFF' or by the person authorised by him in writing.

10.3 When working on live equipment use one hand only whenever possible, it is advisable to keep the other hand behind the back. Shocks from hand to hand are most dangerous.

10.4 All persons handling electrical gear in elevated position must use safety belts. Even a slight shock may cause loss of balance and fall.

10.5 No one shall attempt to extinguish a fire on or near a live electrical apparatus with water. Water is a good conductor of electricity. Use extinguishers wherever provided. Use sand and blankets etc., if available.

10.6 No person shall use any part of electrical equipment for storing or hanging clothes, umbrellas or other articles. Serious accidents occur from this practice.

10.7 For attending the work on O.H. lines or equipment use wooden ladders. Metallic ladders shall not be used.

10.8 Use insulated tools and ensure the insulation is in proper condition periodically at least once in three months. Use rubber gloves wherever possible.

10.9 As far as possible verbal instructions shall be avoided in case of pre-arranged shut-down of electrical apparatus.

10.10 When workers are employed for electrical installations which are already energised, insulating mats, wearing apparel such as gloves, sleeves and boots as may be necessary shall be provided. The workers shall not wear any rings, watches and carry keys or other materials which are good conductors of electricity.

11.0 MISCELLANEOUS

11.1 The Contractor shall provide necessary fencing and lights to protect the public from accident.

11.2 Fire extinguishers adequate in number shall be kept by the Contractor at the site of works where there is risk of fire hazard.

© 2022 MECON Limited All rights reserved

11.3 Adequate washing facilities shall be provided near the place of work.

11.4 When the work is done near any place where there is risk of drowning, all necessary equipments shall be provided and kept ready for use and all necessary steps taken for prompt rescue of any person in danger and adequate provisions shall be made for prompt first aid treatment of all injuries likely to be sustained during the course of the work.

11.5 These safety provisions shall be brought to the notice of all concerned by displaying on a Notice Board at a prominent place at the work spot. The persons responsible for compliance of the code shall be named therein by the Contractor.

11.6 To ensure effective enforcement of the rules and regulations relating to safety precautions, the arrangements made by the Contractor shall be open to inspection by the Engineer and Owner.

11.7 Not withstanding the above clauses there is nothing in those to exempt the Contractor from the operations of any other Act or Rule in force in the Republic of India.

11.8 All storage, handling and use of flammable liquids shall be under the supervision of qualified persons. Flammable liquid shall not be stored inside the tunnel

11.9 All sources of ignition shall be prohibited in areas where flammable liquids are stored, handled and processed. Suitable warning and 'NO SMOKING' signs shall be posted in all such places. Receptacles containing flammable liquids shall be stacked in such a manner as to permit free passage of air between them.

11.10 All combustible materials shall be continuously removed from such areas where flammable liquids are stored, handled and processed. All spills of flammable liquids shall be cleared up immediately. Containers of flammable liquids shall be tightly capped.

12.0 REPORTING OF ACCIDENT

All accidents, major or minor must be reported immediately. The Contractor, will provide first aid to the injured person immediately and the injured person shall report to the first aid station along with the 'INJURED ON WORK' form duly filled in quintuplicate and submit to the Medical Officer of the First Aid Station".

Serious Injury

© 2022 MECON Limited All rights reserved

In case of serious injury, the following procedure shall be adopted by the Contractor:

1. Provide First Aid at his own First Aid Station.
2. Take the injured person to the Hospital along with the "INJURED ON WORK" form duly filled in.
3. Reporting the accident to the Owner/Engineer by the Contractor.

Fatal Accident

Fatal accident must be reported immediately to the Engineer/Owner as well as to the Police.

Penalty

Failure to observe the Safety Rules will make the Contractor liable to penalty by way of suspension of work, fine and termination of contract.

ANNEXURE - A

LIST OF IS & IRC CODES REFERRED

IS 383 – 2016	:	Specification for coarse & fine aggregates from natural sources for concrete.
IS 2386 (Part 1 to 8) – 1963 (Reaffirmed 2016)	:	Method of Test for aggregates for concrete
IS 456 – 2000 (Reaffirmed 2016)	:	Code of practice for plain and reinforced concrete.
IS 712 – 1984 (Reaffirmed 2014)	:	Specification for building limes.
IS 3182 – 1986 (Reaffirmed 2014)	:	Specification for broken brick (burnt clay) fine aggregate for use in lime mortar.
IS 269 – 2015	:	Specification for 33 grade ordinary Portland Cement.

© 2022 MECON Limited All rights reserved

IS 455 – 2015	:	Code of practice for Portland Slag Cement.
IS 1489 – 2015	:	Specification for Portland Pozzolana Cement.
IS 8041 – 1990 (Reaffirmed 2019)	:	Specification for rapid hardening Portland Cement.
IS 8112 – 1989	:	Specification for 43 grade ordinary Portland Cement.
IS 12269 – 1987	:	Specification for 53 grade ordinary Portland Cement.
IS 8043 – 1991 (Reaffirmed 2019)	:	Specification for Hydrophobic Portland Cement
IS 12330 – 1988 (Reaffirmed 2019)	:	Specification for Sulphate resisting Portland Cement.
IS 6452 – 1989 (Reaffirmed 2019)	:	Specification for high alumina cement for structural use.
IS 8042 – 2015	:	Specification for White Portland Cement.
IS 3535 – 1986 (Reaffirmed 2018)	:	Methods of sampling Hydraulic Cement.
IS 4031 (Part 1 to 15) - 1988 to 1991(Reaffirmed 2019)	:	Methods of test for Hydraulic Cement.
IS 4032 – 1985 (Reaffirmed 2019)	:	Method of Chemical Analysis of Hydraulic Cement.
IS 2645 – 1975 (Reaffirmed 2017)	:	Specification for Integral Cement Waterproofing Compounds.
IS 1599 – 2019	:	Method of Bend Test.

© 2022 MECON Limited All rights reserved

IS 1608 – 2018	:	Method of Tensile Testing of Steel Products.
IS 6925 – 1973 (Reaffirmed 2018)	:	Method of test for determination of Water Soluble Chlorides in concrete admixtures.
IS 432 – 1982 (Reaffirmed 2015)	:	Specification for mild steel and medium tensile steel bars and hard drawn steel wire for concrete reinforcement.
IS 1786 – 2008	:	Specification for high strength deformed steel bars and wires for concrete reinforcement.
IS 1566 – 1982 (Reaffirmed 2015)	:	Specification for hard drawn steel wire fabric for concrete reinforcement.
IS 280 – 1978 (Reaffirmed 2015)	:	Mild steel wire for general engineering purposes.
IS 2062 – 2011	:	Structural steel (Standard Quality).
IS 1161 – 2014	:	Steel Tubes for Structural purposes.
IS 5624 – 1970 (Reaffirmed 2014)	:	Foundation bolts.
IS 1363 - (Part 1 to 3) - 2018	:	Hexagon Head bolts, screws, nuts.
IS 2016 – 1967	:	Plain washers.
IS 3063 – 1972 (Reaffirmed 2015)	:	Single coil rectangular section spring washers.
IS 1239 (Part 1&2)-1990 (Reaffirmed 2015)	:	Mild Steel Tubes and other wrought steel pipe fittings.
IS 1367 – 2018	:	Technical supply conditions for threaded steel fasteners.

© 2022 MECON Limited All rights reserved

IS 1030 – 1989 (Reaffirmed 2017)	:	Carbon steel castings.
IS 3480 – 1966 (Reaffirmed 2017)	:	Flexible steel conduit for electrical wiring.
IS 2667 – 1988	:	Fittings for rigid steel conduits for electrical wiring.
IS 9537 (Part 3) – 1983 (Reaffirmed 2015, 2017)	:	Conduit for electrical installations - Rigid Plain conduits of insulating materiel.
IS 6946 – 1973	:	Flexible non-metallic conduits for electrical installations.
IS 3419 – 1989 (Reaffirmed 2017)	:	Fittings for rigid non-metallic conduits.
IS 5913 – 1989 (Reaffirmed 2013)	:	Methods of tests for Asbestos Cement Products.
IS 2098 – 1997 (Reaffirmed 2017)	:	Specification for asbestos cement building boards.
IS 2096 – 1992 (Reaffirmed 2017)	:	Specification for asbestos cement flat sheets.
IS 9537 (Part 2) – 1981 (Reaffirmed 2017)	:	Conduit for electrical installations - Rigid steel conduits.
IS 2614 – 1969	:	Method for sampling of fasteners.
IS 1592 – 2003 (Reaffirmed 2013)	:	Specification for asbestos cement pressure pipes.
IS 9627 – 1980 (Reaffirmed 2015)	:	Specification for asbestos cement pressure pipe (Light duty).
IS 6908 – 1991 (Reaffirmed 2017)	:	Specification for asbestos cement pipes and fittings for sewerage and drainage.
IS 1626 (Part 1 to 3) - 1994 (Reaffirmed	:	Specification for asbestos cement building pipes

© 2022 MECON Limited All rights reserved

2015)		& pipe fittings and roofing fittings
IS 459 – 1992 (Reaffirmed 2013)	:	Specification for unreinforced corrugated and semi corrugated asbestos cement sheets
IS 1077 – 1992 (Reaffirmed 2016) IS 12894 – 2002 (Reaffirmed 2017)	: :	Specification for common burnt clay building bricks. Pulverized fuel ash-lime bricks
IS 3495 (Part 1 to 4) -1992 (Reaffirmed 2016)	:	Method of Test for burnt clay building bricks.
IS 3620 – 1979 (Reaffirmed 2016)	:	Specification for laterite stone block for masonry.
IS 1121- 2013 (Reaffirmed 2017)	:	Method of test for determination of strength properties of natural building stone.
IS 1124 – 1974 (Reaffirmed 2017)	:	Method of test for determination of water absorption Sp. Gr. etc. of building stones
IS 1125 – 2013 (Reaffirmed 2018)	:	Method of test for determination of weathering of natural building stones.
IS 1126 – 2013 (Reaffirmed 2018)	:	Method of test for determination of durability of building stone.
IS 1127 – 1970 (Reaffirmed 2017)	:	Recommendation for dimensions and workman-ship of natural building stones for masonry work.
IS 2185 (Part-1)-2005 (Reaffirmed 2015)	:	Specification for concrete masonry unit Hollow and solid concrete blocks.

© 2022 MECON Limited All rights reserved

IS 2116 – 1980 (Reaffirmed 2017)	:	Specification for sand for masonry mortar
IS 1542 – 1992 (Reaffirmed 2019)	:	Specification for sand for plaster.
IS 2185 (Part-2)-1983 (Reaffirmed 2015)	:	Specification for concrete masonry unit-Hollow and solid light weight concrete blocks.
IS 2185 (Part-3)-1984	:	Specification for concrete masonry unit – Auto claved Cellular Aerated concrete blocks.
IS 6041 – 1985 (Reaffirmed 2015)	:	Code of practice for construction of Auto claved Cellular concrete block masonry.
IS 6441 (Part 1 to 9) - 1972 & 1973 (Reaffirmed 2017)	:	Method of Test for Auto claved Concrete Products.
IS 3068 – 1986 (Reaffirmed 2014)	:	Specification for broken brick (burnt clay) coarse aggregates for use in lime concrete.
IS 2114 – 2018	:	Code of practice for laying in-situ terrazo floor finish.
IS 460 (Part 1 to 3)-1985 (Reaffirmed 2018)	:	Specification for Test Sieves.
IS 1237 – 2012 (Reaffirmed 2017)	:	Specification for cement concrete flooring tiles.
IS 777 – 1988	:	Specification for glazed earthen ware wall tiles.
IS 1129 – 1972 (Reaffirmed 2017)	:	Recommendation for dressing of natural building stone.
IS 1130 – 1969 (Reaffirmed 2017)	:	Specification for Marble (blocks, slabs and tiles).
IS 809 – 1992 (Reaffirmed 2017)	:	Specification for rubber flooring materials for general purposes.

© 2022 MECON Limited All rights reserved

IS 3462 – 1986 (Reaffirmed 2017)	:	Specification for unbacked flexible PVC flooring.
IS 3461 – 1980 (Reaffirmed 2017)	:	Specification for PVC asbestos floor tiles
IS 2818 – 1990	:	Indian Hessians.
IS 653 – 1992 (Reaffirmed 2017)	:	Linoleum sheets and tiles.
IS 5389 – 1969 (Reaffirmed 2017)	:	Code of practice for laying hard wood parquet and wood block flooring.
IS 210 – 2009 (Reaffirmed 2014)	:	Grey Iron Castings.
IS 2114 – 2018	:	Code of practice for laying in-situ terrazzo finish.
IS 1198 – 1982 (Reaffirmed 2017)	:	Code of practice for laying of linoleum flooring.
IS 1003 (Part-2)-1983	:	Specification for timber panelled & glazed shutters, windows and ventilator shutters.
IS 1141 – 1973	:	Code of practice for seasoning of timber.
IS 1003 (Part-1) – 2003 (Reaffirmed 2018)	:	Specification for timber panelled & glazed shutters - Door shutters.
IS 287 – 1993 (Reaffirmed 2017)	:	Recommendation for maximum permissible moisture content of timber used for different purposes.
IS 2202 (Part-1) – 1999 (Reaffirmed 2017)	:	Specification for wooden flush door shutters (Solid core type).
IS 2191 (Part-1&2)-1983 (Reaffirmed 2017)	:	Specification for wooden flush door shutters (cellular and hollow core type).

© 2022 MECON Limited All rights reserved

IS 3087 – 2005 (Reaffirmed 2015)	:	Specification for wood particle boards (Medium density) for general purposes.
IS 3478 – 1966 (Reaffirmed 2013)	:	Specification for high density wood particle boards.
IS 3097 – 2006 (Reaffirmed 2017)	:	Specification for veneered particle boards
IS 303 – 1989 (Reaffirmed 2013)	:	Specification for plywood for general purposes.
IS 1328 – 1996 (Reaffirmed 2017)	:	Specification for veneered decorative plywood.
IS 205 – 1992 (Reaffirmed 2017)	:	Specification for non-ferrous metal butt hinges.
IS 1341 – 2018	:	Specification for steel butt hinges.
IS 362 – 1991 (Reaffirmed 2016)	:	Specification for parliament hinges.
IS 453 – 1993 (Reaffirmed 2018)	:	Specification for double acting spring hinges.
IS 3818 – 1992 (Reaffirmed 2017)	:	Specification for continuous (Piano) hinges.
IS 206 – 2010 (Reaffirmed 2017)	:	Specification for Tee and Strap hinges.
IS 281 – 2009 (Reaffirmed 2018)	:	Specification for mild steel sliding door bolts for use with padlocks.
IS 1019 – 1974 (Reaffirmed 2017)	:	Specification for rim latches.
IS 2681 – 1993 (Reaffirmed 2018)	:	Specification for non-ferrous metal sliding door bolts for use with padlocks.
IS 204 (Part 1&2)-1991&92 (Reaffirmed 2016, 2017)	:	Specification for tower bolts - Ferrous and Non-ferrous metals.
IS 208 – 1996 (Reaffirmed 2017)	:	Specification for door handles.

© 2022 MECON Limited All rights reserved

IS 2209 – 1976	:	Specification for mortice locks (vertical type).
IS 6607 – 1972 (Reaffirmed 2016)	:	Specification for rebated mortice locks (vertical type).
IS 1823 – 1980 (Reaffirmed 2017)	:	Specification for floor door stoppers.
IS 1837 – 1966 (Reaffirmed 2016)	:	Specification for fan light pivots.
IS 207 – 1964 (Reaffirmed 2016)	:	Gate and shutter hooks and eyes.
IS 6343 – 1982 (Reaffirmed 2016)	:	Specification of door closers (peneumatically regulated) for light door weighing upto 40 Kg.
IS 8756 – 1978 (Reaffirmed 2017)	:	Specification for ball catches for use in wooden Almirah.
IS 6315 – 1992 (Reaffirmed 2017)	:	Specification for floor springs (hydraulically regulated) for heavy doors.
IS 7197 – 2006 (Reaffirmed 2016)	:	Specification for Double action floor spring (without oil check) for heavy doors
IS 364 – 1993 (Reaffirmed 2018)	:	Specification for fan light catch.
IS 3828 – 1966 (Reaffirmed 2016)	:	Specification for ventilator chains.
IS 363 – 1993 (Reaffirmed 2018)	:	Specification for hasp and staples.
IS 9899 – 1981 (Reaffirmed 2017)	:	Specification for hat, coat and wardrobe hooks.
IS 729 – 1979 (Reaffirmed 2016)	:	Specification for drawer locks, cup-board locks and box locks.
IS 3564 – 1995 (Reaffirmed 2018)	:	Specification for door closers (Hydraulically regulated).

© 2022 MECON Limited All rights reserved

IS 4351 – 2003 (Reaffirmed 2018)	:	Specification for steel door frames.
IS 419 – 1967 (Reaffirmed 2019)	:	Putty for use on window frames.
IS 5187 – 1972 (Reaffirmed 2016)	:	Specification for flush bolts.
IS 3847 – 1992 (Reaffirmed 2016)	:	Specification for mortice night latches.
IS 4621 – 1975 (Reaffirmed 2016)	:	Specification for indicating bolts.
IS 1038 – 1983 (Reaffirmed 2017)	:	Specification for steel doors, windows and ventilators.
IS 1977 – 1975	:	Structural steel (ordinary quality).
IS 1361 – 1978 (Reaffirmed 2017)	:	Specification for steel windows for industrial buildings.
IS 7452 – 1990 (Reaffirmed 2017)	:	Hot rolled steel sections for doors, windows and ventilators.
IS 1948 – 1961 (Reaffirmed 2017)	:	Specification for aluminium doors, windows and ventilators.
IS 1148 – 2009 (Reaffirmed 2016)	:	Specification for hot rolled rivet bars for structural purposes.
IS 1949 – 1961 (Reaffirmed 2017)	:	Specification for aluminium windows for industrial buildings.
IS 204 (Part 1) – 1992 (Reaffirmed 2016)	:	Specification for tower bolts-non-ferrous metal.
IS 733 – 1983 (Reaffirmed 2017)	:	Wrought aluminium and aluminium alloy bars, rods and sections (for general engineering purposes).

© 2022 MECON Limited All rights reserved

IS 6248 – 1979 (Reaffirmed 2017)	:	Specification for metal rolling shutters and rolling grills.
IS 1081 – 1960 (Reaffirmed 2017)	:	Code of practice for fixing and glazing of metal doors, windows and ventilators.
IS 2339 – 2013 (Reaffirmed 2018)	:	Specification for Aluminium Paint for general purpose in dual containers.
IS 2835 – 1987 (Reaffirmed 2018)	:	Flat Transparent sheet glass.
IS 5437 – 1994 (Reaffirmed 2017)	:	Wired and figured glass.
IS 101 (Part 1 to 8) - 2015	:	Method of sampling and test for paints, varnishes and related products.
IS 2074 – 2015	:	Ready mixed paint, air drying, red oxide zink chrome, priming.
IS 5410 – 2013 (Reaffirmed 2018)	:	Cement paint, colour as required.
IS 427 – 2013 (Reaffirmed 2018)	:	Distemper, dry, colour as required.
IS 428 – 2013 (Reaffirmed 2018)	:	Distemper, oil emulsion, colour as required.
IS 348 – 1968 (Reaffirmed 2019)	:	French polish.
IS 5411 (Part 1&2) - 1972 to 1974	:	Plastic emulsion paint.
IS 702 – 1988 (Reaffirmed 2019)	:	Industrial Bitumen.
IS 73 – 1992	:	Paving Bitumen.
IS 217 – 2018	:	Cut Back Bitumen.
IS 454 – 1961	:	Specification for Digboi type cutback bitumen.

© 2022 MECON Limited All rights reserved

IS 5467 – 1986 (Reaffirmed 2018)	:	Specification for shellac Wax.
IS 3384 – 1986 (Reaffirmed 2016)	:	Specification for Bitumen primer for use in water proofing and damp proofing.
IS 290 – 1961	:	Specification for Coal Tar Black Paint.
IS 341 – 2016	:	Specification for Black Japan, Type A, B & C.
IS 1322 – 1993 (Reaffirmed 2017)	:	Specification for bitumen felts for water proofing and damp proofing.
IS 218 – 1983 (Reaffirmed 2014)	:	Specification for creosote oil for use as wood preservative.
IS 3037 – 1986 (Reaffirmed 2016)	:	Specification for Bitumen mastic for use in water proofing of roofs.
IS 1580 – 1991 (Reaffirmed 2016)	:	Specification for Bituminous compound for water proofing and caulking purposes.
IS 8542 – 1977	:	Specification for polish for wooden furniture paste.
IS 9862 – 2017	:	Ready mixed paint, brushing etc.
IS 782 – 1978 (Reaffirmed 2017)	:	Specification for caulking lead.
IS 405 (Part 1&2) – 1992 (Reaffirmed 2014)	:	Lead sheet and strips.
IS 5134 – 1977 (Reaffirmed 2014)	:	Bitumen impregnated paper.
IS 2849 – 1983 (Reaffirmed 2017)	:	Specification for non load bearing gypsum partition blocks.
IS 8591 – 1980 (Reaffirmed 2018)	:	Specification for floor polish paste.

© 2022 MECON Limited All rights reserved

IS 2095 (Part-1) – 2011 (Reaffirmed 2016)	:	Specification for gypsum plaster boards.
IS 77 – 1976	:	Specification for linseed oil, boiled for paints.
IS 533 – 2007 (Reaffirmed 2017)	:	Gum Spirit of turpentine (oil of Turpentine).
IS 1504 – 1996 (Reaffirmed 2014)	:	Bees Wax.
IS 3536 – 2016	:	Ready mixed paint, brushing, wood primer pink.
IS 8273 – 1984	:	Specification for gypsum plaster for use in the manufacture of fibrous plaster board.
IS 5871 – 1987 (Reaffirmed 2016)	:	Specification for bitumen mastic for tanking and damp proofing.
IS 651 – 2007 (Reaffirmed 2017)	:	Specification for salt glazed stoneware pipe and fittings.
IS 1729 – 2002 (Reaffirmed 2017)	:	Sand cast iron spigot and socket soil pipe.
IS 771 (Part 1 to 7) - 1979 to 1985 (Reaffirmed 2015 - 2018)	:	Specification for glazed fire clay appliances.
IS 1230 – 1979	:	Cast iron rain water pipes and fittings.
IS 774 – 2004 (Reaffirmed 2014)	:	Flushing cisterns for water closets and urinals.
IS 2548 (Part 1&2) – 1996 (Reaffirmed 2017)	:	Specification for plastic seats and cover for water closet.
IS 1726 – 1991(Reaffirmed 2017)	:	Specification for cast iron manhole cover and frames.
IS 1239 (Part 1&2)-2004 to 2011 (Reaffirmed 2015)	:	Mild steel Tubes and fittings.

© 2022 MECON Limited All rights reserved

IS 4984 – 2016	:	Specification for high density polyethylene pipes for potable water supplies: Sewerage and industrial effluents.
IS 2556 (Part 1 to 15) - 1994 to 2004 (Reaffirmed 2017)	:	Specification for vitreous sanitary appliances (vitreous china).
IS 7328 – 1992 (Reaffirmed 2018)	:	High density polyethylene materials.
IS 4985 – 2000 (Reaffirmed 2015)	:	Specification for unplasticised PVC pipes for potable water supplies.
IS 3076 – 2012	:	Specification for low density polyethylene pipe for potable water supplies.
IS 9762 – 1994 (Reaffirmed 2014)	:	Specification for polyethylene floats for ball valve.
IS 3395 – 1997 (Reaffirmed 2015)	:	Code of practice for fire safety of industrial buildings.
IS 7834 (Part 1 to 8) – 1987 (Reaffirmed 2018)	:	Specification for injection moulded PVC fittings with solvent cement joint for water supplies.
IS 8008 (Part 1 to 7) – 2003 (Reaffirmed 2018)	:	Specification for injection moulded HDPE fittings for potable water supplies.
IS 8360 (Part 1 to 3) – 1977 (Reaffirmed 2017)	:	Specification for fabricated high density polyethylene fittings for potable water.
IS 784 – 2019	:	Specification for prestressed concrete pipe.
IS 1703 – 2000 (Reaffirmed 2015)	:	Specification for copper alloy float valves (horizontal plunger type) for water supply fittings.

© 2022 MECON Limited All rights reserved

IS 12234 – 1988 (Reaffirmed 2018)	:	Specification for plastic equilibrium float valve for cold water services.
IS 778 – 1984 (Reaffirmed 2015)	:	Specification for copper alloy gate, globe and check valves for water works purposes.
IS 1536 – 2001 (Reaffirmed 2016)	:	Centrifugally cast (spun) iron pressure pipes.
IS 1537 – 1976 (Reaffirmed 2014)	:	Vertically cast iron pressure pipes for water, gas and sewage.
IS 1538 (Part 1 to 23) – 1993 (Reaffirmed 2018)	:	Sand cast iron spigot and socket soil, waste and ventilating pipes, fittings and accessories.
IS 3589 – 2001	:	Electrically welded steel pipes for water, gas and sewage.
IS 781 – 1984 (Reaffirmed 2015)	:	Specification for cast copper alloy screw down bib taps and stop valves for water services.
IS 1239 (Part 1&2) - 2004 to 2011 (Reaffirmed 2015)	:	Mild steel tubes and fittings.
IS 779 – 1994 (Reaffirmed 2015)	:	Specification for water meters.
IS 1795 – 1982 (Reaffirmed 2015)	:	Specification for pillar taps for water supply purposes.
IS 1363 (Part 1 to 3) – 2002 to 2018	:	Dimensions for screw thread run-outs and undercuts.
IS 2016 – 1967	:	Plain washers.
IS 638 – 1979 (Reaffirmed 2018)	:	Sheet rubber jointing and rubber insertion jointing.

© 2022 MECON Limited All rights reserved

IS 4127 – 1983 (Reaffirmed 2017)	:	Code of practice for laying of glazed stoneware pipes.
IS 458 – 1988	:	Specification for precast concrete pipes.
IS 6313 – 2013 (Reaffirmed 2015)	:	Code of practice for antitermite measures in building.
IS 1054 – 1962	:	Dieldrin emulsifiable concentrates.
IS 1308 – 1984	:	Aldrin dusting powders.
IS 6439 – 1978	:	Hepta chlor emulsifiable concentrates.
IS 2632 – 1964 (Reaffirmed 2015)	:	Crotonaldehyde.
IS 1791 – 1985 (Reaffirmed 2015)	:	Specification for batch type concrete mixers.
IS 10262- 2019	:	Recommended guidelines for concrete mix design.
IS 7861 (Part 1) – 1975 (Reaffirmed 2016)	:	Code of practice for extreme weather concreting - Recommended practice for hot weather concreting.
IS 1199 – 2018	:	Methods of sampling and analysis for concrete.
IS 516 – 1959 (Reaffirmed 2018)	:	Method of test for strength of concrete.
IS 7861 (Part 2) – 1981 (Reaffirmed 2016)	:	Code of practice for extreme weather concreting. Recommended practice for cold weather concreting.
IS 2502 – 1963 (Reaffirmed 2018)	:	Code of practice for bending and fixing of bars for concrete reinforcement.

© 2022 MECON Limited All rights reserved

IS 2751 – 1979 (Reaffirmed 2019)	:	Recommended practice for welding of mild steel plain and deformed bars for reinforced construction.
IS 800 – 2007 (Reaffirmed 2012)	:	Code of practice for general construction in steel and deformed bars.
IS 816 – 1969 (Reaffirmed 2019)	:	Code of practice for use of metal arc welding.
IS 814 – 2004 (Reaffirmed 2016)	:	Covered electrodes for manual metal arc.
IS 3370 (Part 1&2) – 2009 (Reaffirmed 2019)	:	Code of practice for concrete structures for the storage of liquids.
IS 2911 (Part 1 to 4) – 2010 to 2013 (Reaffirmed 2015 to 2018)	:	Code of practice for design and construction of pile foundations.
IS 1343 – 2012 (Reaffirmed 2017)	:	Code of practice for prestressed concrete.
IS 1785 (Part 1&2) – 1983 (Reaffirmed 2013)	:	Specification for plane hard drawn steel wires for prestressed concrete.
IS 2250 – 1981 (Reaffirmed 2015)	:	Code of practice for preparation and use of masonry mortars.
IS 1635 – 1992 (Reaffirmed 2014)	:	Code of practice for field slaking of building lime.
IS 2212 – 1991 (Reaffirmed 2014)	:	Code of practice for brick work.
IS 1597 (Part 1&2)-1992 (Reaffirmed 2016)	:	Code of practice for construction of stone masonry.
IS 4101 (Part 1 to 3) - 1967 to 1985 (Reaffirmed 2015)	:	Code of practice for external facing and veneer.

© 2022 MECON Limited All rights reserved

IS 737 – 2008 (Reaffirmed 2005)	:	Wrought aluminium and aluminium alloys, sheet and strips (for general engineering purposes).
IS 2572 – 2005 (Reaffirmed 2015)	:	Code of practice for construction of hollow connect block masonry.
IS 1661 – 1972 (Reaffirmed 2017)	:	Code of practice for application of cement finishes.
IS 5766 – 1970 (Reaffirmed 2017)	:	Code of practice for laying of burnt clay brick flooring.
IS 5491 – 1969 (Reaffirmed 2017)	:	Code of practice for laying of in-situ granolithic concrete flooring topping.
IS 3316 – 1974 (Reaffirmed 2017)	:	Specification for structural granite.
IS 1196 – 1978	:	Code of practice for laying bitumen mastic flooring.
IS 1195 – 2002 (Reaffirmed 2017)	:	Specification for bitumen mastic for flooring.
IS 3462 – 1986 (Reaffirmed 2017)	:	Specification for unbacked flexible PVC flooring.
IS 1198 – 1982 (Reaffirmed 2017)	:	Code of practice for laying fixing and maintenance of linoleum floor.
IS 848 – 2006 (Reaffirmed 2017)	:	Specification for synthetic resin adhesive for plywood.
IS 4457 – 2007 (Reaffirmed 2017)	:	Specification for ceramic unglazed vitreous acid resisting tiles.
IS 851 – 1978 (Reaffirmed 2014)	:	Specification for synthetic resin adhesive for

© 2022 MECON Limited All rights reserved

		construction work (non structural) for wood.
IS 2202 (Part 1&2) - 1983 to 1999 (Reaffirmed 2017)	:	Specification for wooden flush door shutters.
IS 102 – 1962	:	Ready mixed paint.
IS 1081 – 1960 (Reaffirmed 2017)	:	Code of practice for fixing and glazing of metal doors.
IS 6248 – 1979 (Reaffirmed 2017)	:	Specification for metal rolling shutters and rolling grills.
IS 1868 – 1996 (Reaffirmed 2016)	:	Anodic coatings on aluminium and its alloys.
IS 2065 – 1983 (Reaffirmed 2017)	:	Code of practice for water supply in buildings.
IS 2064 – 1993 (Reaffirmed 2017)	:	Code of practice for selection, installation and maintenance of sanitary appliances.
IS 7634 (Part 1 to 3) – 1975 to 2012 (Reaffirmed 2017 to 2018)	:	Code of practice for plastic pipes.
IS 1742 – 1983 (Reaffirmed 2017)	:	Code of practice for building drainage.
IS 5330 – 1984 (Reaffirmed 2015)	:	Criteria for design of anchor blocks for penstocks with expansion joints.
IS 3114 – 1994 (Reaffirmed 2014)	:	Code of practice for laying of cast iron pipes.
IS 783 – 1985 (Reaffirmed 2017)	:	Code of practice for laying of concrete pipes.
MORT&H Specification – 2013	:	Specification for Road and Bridge works (5th Revision).
IRC 19 – 2005	:	Standard specification and code of practice for

© 2022 MECON Limited All rights reserved

		water Bound macadam.
IRC 111 – 2009	:	Specification for dense graded Bituminous Mixes.
IRC 15 – 2017	:	Standard specification and code of practice for construction of concrete roads.
IRC-SP112- 2017	:	Manual for Quality control in Road and Bridge works.
IRC-63 – 1976	:	Tentative guidelines for use of low grade aggregates and soil aggregate mixtures in road pavement construction.
IRC-60 – 1976	:	Tentative guidelines for use of Lime Fly Ash Concrete as pavement base or sub-base.
IRC-74 – 1979	:	Tentative guidelines for use of Lean Cement Concrete and lean concrete Fly Ash Concrete as pavement base or sub-base.
IRC-43 – 2015	:	Recommended practice for Tools, Equipment and appliances for concrete pavement construction.
IS 6509 – 1985 (Reaffirmed 2015)	:	Code of practice for installation of joints in concrete pavement.
IS 1838 (Part 1) – 1983 (Reaffirmed 2015)	:	Specification for performed filler for expansion joint in concrete pavements and structures.
IS 3036 – 1992 (Reaffirmed 2017)	:	Code of practice for laying lime concrete for a water proofed roof finish.

© 2022 MECON Limited All rights reserved

IS 1346 – 1991 (Reaffirmed 2016)	:	Code of practice for water proofing of roofs with bitumen felts.
IS 1609 – 1991 (Reaffirmed 2016)	:	Code of practice for laying damp proofing treatment using bitumen felt.
IS 4365 – 1967 (Reaffirmed 2016)	:	Code of practice for application of bitumen mastic for waterproofing of roofs.
IS 9103 – 1999 (Reaffirmed 2018)	:	Specification for admixtures for concrete.
IS 2645 – 2003 (Reaffirmed 2017)	:	Specification for integral cement water proofing compounds.
IS 1834 – 1984 (Reaffirmed 2015)	:	Specification for hot applied sealing compound for joint in concrete.
IS 278 – 2009 (Reaffirmed 2015)	:	Specification for Galvanized barbed wire for fencing.
IS 2721 – 2003 (Reaffirmed 2013)	:	Specification for Galvanized steel chain link fabric.
IS 280 – 2006 (Reaffirmed 2015)	:	Specification for Mild steel wire.
IS 4826 – 1979 (Reaffirmed 2016)	:	Specification for hot dipped galvanized coating on round steel wires.
IS 1200 (Part 1 to 28) - 1971 to 2013 (Reaffirmed 2017 / 2018)	:	Method of measurement of building and Civil Engineering Works.
IS 4081 – 2013	:	Safety code for blasting.
IS 5916 – 2013 (Reaffirmed 2018)	:	Construction involving use of hot bituminous materials – Code of safety.

© 2022 MECON Limited All rights reserved

IS 4130 – 1991 (Reaffirmed 2017)	:	Safety Code for demolition of building.
IS 3764 – 1992 (Reaffirmed 2017)	:	Safety code for excavation work.
IS 5121 – 2013	:	Safety code for piling.
IS 4014 (Part 2) – 2013	:	Code of practice for steel tubular scaffolding.
IS 3696 (Part 1&2) - 1987 to 1991 (Reaffirmed 2017)	:	Safety code of scaffolds and ladders.
IS 6922 – 1973 (Reaffirmed 2018)	:	Criteria for safety and design of structures subject to underground blast.
IS 5499 – 1969 (Reaffirmed 2018)	:	Code of practice for construction of underground raid shelter.
IS 4138 – 1977 (Reaffirmed 2017)	:	Safety code for working in compressed air.
IS 7293 – 1974 (Reaffirmed 2017)	:	Safety code for working with construction machinery.
IS 8989 – 1978 (Reaffirmed 2015)	:	Safety code for erection of concrete framed structures.
IS 4756 – 1978 (Reaffirmed 2017)	:	Safety code for Tunneling work.
IS 7205 – 1974 (Reaffirmed 2016)	:	Safety code for erection of structural steel works.

© 2022 MECON Limited All rights reserved

ANNEXURE – B

LIST OF PREFERRED MAKES (CIVIL & ARCHITECTURAL)

General

The makes and manufacturers shall be from the following list and read along with GTS-13. In case same is not available in the market or in case of change in trade name, equivalent makes / re-designated manufacturer shall be used with prior approval of Engineer In charge.

Sl. No.	MATERIALS	MANUFACTURERS
A	**Anti Termite Treatment**	
1.	Anti Termite Treatment	M/s. Pest Control India ltd., M/s. Mysodet Pvt. Ltd
B.	**Concrete & Masonry works**	
1	Cement	ACC, Ultratech, Grasim, Dalmia
2	Reinforcement Steel / Structural Steel	SAIL, RINL, Tata Steel, IISCO,JSPL,SHYAM
3	Admixtures for concrete (Plasticisers and Water proofing compounds),	SIKA, FOSROC, PIDILITE, MYK, STP,CRYSO
4	White Cement	Birla White, JK White Cement, The India Cement
5	PVC Water Stops	Basecon, Asian Engg. Product, Capnhans India, , Fixopan, Pidilite
C	**Flooring**	
1	Vitrified Tiles	Restile, Kajaria, Somany, RAK, HR Johnson,Asian,Nitco,Morbito
2	Acid Alkali Proof lining / tiles	Restile, Johnson (Endura), Good earth or approved equivalent make
3	Metallic Floor Hardener	M/s. Triveni Color Industries (Floornet) M/s. Heatly & Grasham (India) Ltd. M/s. De-Rust Chemical Corporation of inida (Ferronite) M/s. Cement Research Corporation

© 2022 MECON Limited All rights reserved

Sl. No.	MATERIALS	MANUFACTURERS
		Pvt. Ltd. (Stilonite)
4	Non Metallic Floor Hardener	Fosroc, Sika, Pidilite, Cryso
5	Ceramic Tiles	Johnson, Somany, Kajaria, NITCO, Orient bell
6	False floor/ Raised access floor	Unitile, Hifloor or equivalent
7	Sunken Portion Treatment	Choksey, Sika, Pidilite, STP,MYK
8	PVC/ Vinyl Flooring	Premier Vinyl Flooring, Responsive Flooring, Armstrong, Polyflor, Wonderfloor.
9	Epoxy Floor	Pidilite, Fosroc, Asian Paints, Sika, Tremco, BASF, MYK
10	Polyurethane Flooring	MYK, Fosroc, Berger, Tremco
D.	**Wood Works**	
1.	Laminates, Veneer	Formica, Decolam, Century, Merino, Greenlam, Durian
2.	Pre-Laminated Particle Board/ Particle Board	Greenply, Kitlam, Bhutan Board, Indian Plywood Mfg, Co. Ltd., Indian Wood and Wood Products, Mangalore, Mysore Plywood Limited, M/s Western India Plywood, Orchid Ply
3.	Flush Door Shutters (Exterior Grade)	Kitply, Green Ply, Kutty Flush Doors, Anchor
4.	Ply Board	Greenply, Kitply, Century or approved equivalent make
5.	Prelaminated MDF Board	Mangalam Timber (Dura Tuff), Century, Action TESA, Archidply or approved equivalent make
8.	Dry wall partition	Saint gobain, USG Boral or approved equivalent make
9	Cement Fibre Board	Everest, Visaka, NCL(Bison)
E.	**Steel Works**	
1.	M.S. Pipe	Jindal Hisar, Kalinga, TATA
2	Metal Fire Check Doors	Godrej, Shakti Met-dor or approved equivalent make

© 2022 MECON Limited All rights reserved

Sl. No.	MATERIALS	MANUFACTURERS
3	Stainless Steel Bolts, Screws, Washers, Nuts	Kundan, Puja, Atul or approved equivalent make
4	Stainless Steel Pipes/Flats	Jindal, Salem Steel or approved equivalent make
5	Dash Fasteners/Anchor bolts for door, windows fixing	Hilti, Fischer, Bosch, WURTH
F.	**Aluminium Works**	
1	Aluminium Sections and fittings	Bhoruka, Hindalco, Jindal
2	Aluminium Composite Panel	Alstrong,Alpolic,Alucobond, Aludecor, Aalutuff
3	E.P.D.M. Gaskets	Anand Reddiplex, Enviro Seals or approved equivalent make
G.	**Fittings & Fixtures**	
1	Doors & Windows Fixtures / Fittings	Everite, Hardwyn, Earl Bihari, Garnish, Godrej, Secur Industries, Hafele,ebco
2	Stainless Steel Door handles, butt hinges (with and without ball bearings), Floor stoppers, Cabinet handles, knobs	Kich, Dorma, Ozone, Godrej, ebco
3	Stainless Steel Tower bolts, Sliding Bolts	Kich, Dorma, Ozone, Godrej, ebco
4	Door Closer / Floor spring	Hardwyn , Dorma, Godrej, Ozone
5	Door Locks	ACME, Godrej, Harrison, PAG, Hafele, Doorset
6	Stainless Steel Friction Stay	Securistyle, Hafele, Dorma, Hettich, Kich
7	Stainless Steel –Glass handles	Kich, Dorma, Ozone, Godrej
8	Stainless Steel Handrails, Balustrade	Kich, Ozone, Godrej
H	**PVC Doors/ Windows**	
1.	PVC Doors	Duroplast, ACCUCEL, Rajshri
2.	UPVC Doors /windows	Duroplast, NCL Veka, Rehau, Fenesta, Kommerling
I.	**Painting Works**	
1	Synthetic Enamel Paints	Berger, Asian Paints, Nerolac, Dulux, Shalimar

© 2022 MECON Limited All rights reserved

Sl. No.	MATERIALS	MANUFACTURERS
2	Oil Bound Distemper	Asian paints, Berger, Nerolac, Jenson & Nicholson, Shalimar.
3	Cement Paint	Snowcem, Berger, Kansai Nerolac, Asian Paints
4	Exterior and Interior Acrylic Emulsion Paint	Dulux, Asian paints, Berger, Snowcem, Nerolac
5	Epoxy Paint	Nerolac, Shalimar, Asian Paints, Huntsman
6	Wall Putty	Birla White, JK White, The India Cement
7	Primers	Dulux, Asian paints, Berger, Snowcem, Nerolac
J.	**Glass**	
1	Clear Float Glass / Toughened Glass/ Reflective Glass/ Mirror	Modiguard, AIS (Asahi), Saint Gobain Glaverbel, Glavermas
K.	**False Ceiling Works**	
1	False ceiling – Gypsum Board System	USG Boral, Gyproc or approved equivalent
2	False ceiling – Aluminium Panel System	Hunter Douglas (Luxalon), Armstong, Interarch
3	False Ceiling - Calcium Silicate Board	Aerolite, Ramco-Hilux, Metroc
L.	**Sealants**	
1	Polysulphide sealant/Silicon Sealant	Pidilite, Fosroc, Choksey, Sika Degussa , Dow Corning
M.	**Expansion Joint Treatment**	
1	Expansion Joint Treatment	M/s.Shalitex, M/s. Pidilite Industries M/s. Sika M/s.Shalimar Tar Products
N.	**Water Proofing Treatment**	
1	Polymer based cementitious waterproofing treatment, Elastomeric membrane waterproofing treatment, Polypropylene Polymeric (APP) membrane waterproofing treatment, waterproofing with bimumen felt etc.	BASF, SIKA, FOSROC, STP, BITUMAT, Asian Paint, MYK, Cryso, Pidilite or approved equivalent.
O.	**Sanitary & Plumbing Works**	

© 2022 MECON Limited All rights reserved

Sl. No.	MATERIALS	MANUFACTURERS
1	Vitreous China Sanitary ware	Hindware, Parryware, Kohler, Geberit, Jaquar, Cera
2	White Glazed Fire Clay Sink	Cera, Neycer, Hindware, Parryware
3	Stainless Steel Sink	AMC, Nirali, Jayna, Kaff
4	Plastic Seat Cover of E. W.C.	Commander, Bestolite, Jaquar, Hindware, Parryware, Kohler,
5	C.P. Fittings mixer / pillar taps, washers, C.P. Brass accessories	Jaquar, MARC, Roca, Kohler, Geberit, Nirali, JAL
6	Centrifugally / Sand Cast iron pipes & fittings & fixtures (IS 3989/1729)	NECO, Electrosteel or approved equivalent make
7	G.I. Pipes	Tata, Jindal or approved equivalent make
8	G.I. Fittings	Unik, K.S., Zoloto–M or approved equivalent make
9	Gunmetal Valves	Zoloto, Leader, Sant
10	CP Brass stop Cock& Bib Cock	Jaquar, Ess Ess, MARC, Kohler
11	Ball valve with floats	Zoloto, Leader, Sant, Jayco
12	PTMT fittings, fixtures & accessories	India Prayag, JAL
13	CPVC Pipe	Ajay, Finolex, Astral
14	C.I. Manhole Covers	RIF, NECO, BIC
15	PVC Water Tank	Sintex, Polycon, Infra, Supreme or approved equivalent make
16	Mirror	Atul, Modi Guard, Saint Gobain or approved equivalent make
17	Hand Drier	Kopal, Automat, Euronics or approved equivalent make
18	UPVC Rain Water Pipes	Supreme, Finolex, Kisan, Ashirwad, Astral
19	C.I. Pipes Class LA and fittings	Keso-spun, supra, Electrosteel or approved equivalent make
20	UPVC/HDPE Pipes & fittings	Finolex, Astral, supreme, oriplast, Ashirwad
Q.	Boom barrier	Gandhi Automation, Neptune

© 2022 MECON Limited All rights reserved

Sl. No.	MATERIALS	MANUFACTURERS
		Automatic, Somfy india, Maple Leaf Electrovacs & Access systems
P.	Exterior Grade Compact laminate (HPL)	Fundermax, Greenlam Clads or approved equivalent

Note: In case of items not covered in the above list, the material shall be procured after approval of Client as per the standard material available in the market and having BIS certification mark.

© 2022 MECON Limited All rights reserved

UTKARSHA ALUMINIUM DHATU NIGAM LIMITED

ESTABLISHING FACILITY FOR ALUMINIUM ALLOY MELTING, SLAB CASTING AND FLAT ROLLED PRODUCTS PRODUCTION FACILITY

GENERAL TECHNICAL SPECIFICATION FOR AIR CONDITIONING, VETILATION AND AIR POLUTION CONTROL SYSTEM (GS – 08)

MECON LIMITED
RANCHI - 834002

No. MEC/S/11/35/Q7R6/GTS/01/R0 **JUNE' 2022**

LIST OF CONTENTS FOR GS - 08

Sl. No.	Description	Page No.
1.	SYSTEM SPECIFICATION OF AIR CONDITIONING SYSTEM (SS1)	03-09
2.	SYSTEM SPECIFICATION OF DUST EXTRACTION SYSTEM (SS2)	10-17
3.	SYSTEM SPECIFICATION OF DUST SUPPRESSION SYSTEM (SS3)	18-23
4.	SYSTEM SPECIFICATION OF VENTILATION SYSTEM (SS4)	24-27
5.	ES1 - AIR HANDLING UNIT / FAN COIL UNIT	27-31
6.	ES2 - AIR WASHER UNIT	32-35
7.	ES3 - BAG FILTER	36-42
8.	ES4 - CENTRIFUGAL FAN	43-47
9.	ES5 - CENTRIFUGAL PUMP	48-52
10.	ES6 -VAPOUR ABSORPTION M/C (VAM) BASED CHILLER PLANT	53-59
11.	ES7 - VAPOUR COMPRESSION BASED CHILLER PLANT	60-67
12.	ES8 - CHAIN PULLEY BLOCK	68-69
13.	ES9 - COOLING TOWER	70-72
14.	ES10 - CYCLONES, MULTI-CLONES & PRE-COLLECTOR	73-75
15.	ES11 - DAMPERS FOR AIR FLOW CONTROL	75-81
16.	ES12 - DUCTING NETWORK OF DUST EXTRACTION SYSTEM	82-85
17.	ES13 - DUCTING NETWORK FOR HVAC SYSTEM	86-90
18.	ES14 - ELECTROSTATIC PRECIPITATOR	91-98
19.	ES15 - FILTER DRY TYPE	99-99
20.	ES17 - THERMAL & ACOUSTIC INSULATION FOR HVAC (INSULATION FOR COLD APPLICATION)	100-103
21.	ES18 - INSULATION FOR HOT APPLICATION	103-106

© 2022 MECON Limited All rights reserved

Sl. No.	Description	Page No.
22.	ES19- PACKAGED AIR CONDITIONER	107-109
23.	ES20 - PROPELLER FAN	110-110
24.	ES21 - SCRUBBER FOR DUST EXTRACTION SYSTEMS	111-113
25.	ES22 - STACK	114-116
26.	ES23 - TUBE AXIAL FLOW FAN	117-119
27.	ES24 - WATER LINE VALVES	120-123
28.	ES25- WINDOW / SPLIT / DUCTABLE SPLIT TYPE AIR CONDITIONER	124-126
29.	ABBREVIATION	127-128

© 2022 MECON Limited All rights reserved

1.0 SYSTEM SPECIFICATION OF AIR CONDITIONING SYSTEM (SS1)

01. General

This specification outlines the minimum requirement for design, engineering, selection, manufacture, testing and supply/fabrication of Air Conditioning System with all accessories required to be installed for HVAC application to achieve desired performance in all respects. Specific technical requirement of Air Conditioning System if any, shall be mentioned in the job specification/data sheet as furnished along with the Technical Specification.

Brief description of Air Conditioning System is given below under clause No. 02. The point wise list of data to be furnished by the tenderer along with the offer is mentioned below under clause No. 03.

Description

This specification specifies general requirement of refrigeration and air-conditioning system for different applications.

In general following equipment for air conditioning systems shall be considered as described in respective equipment specification.

- AIR HANDLING UNIT / FAN COIL UNIT – ES1
- CENTRIFUGAL FAN – ES4
- CENTRIFUGAL PUMP – ES5
- VAPOUR ABSORPTION M/C (VAM) BASED CENTRAL A/C – ES6
- VAPOUR COMPRESSION BASED CENTRAL A/C – ES7
- COOLING TOWER – ES9
- DAMPERS – ES11
- DUCTING NETWORK FOR HVAC SYSTEM – ES13
- FILTER-DRY TYPE – ES15
- THERMAL & ACOUSTIC INSULATION FOR HVAC APPLICATION– ES17
- PACKAGE TYPE A/C SYSTEM – ES19
- WATER LINE VALVES – ES24
- WINDOW & SPLIT TYPE A/C SYSTEM – ES25

Design Consideration:

Following Indian Standards shall be followed for designing Air Conditioning System:

IS 655: 2006	HVAC System duct
IS-659-1964 (RA-2001)	Safety code for air conditioning system
IS 778:1984 (RA 2005)	Specification for Copper Alloy Gate, Globe and Check Valves for Waterworks Purposes
IS 1239 : Part 1 : 2004	Steel Tubes, Tubulars and Other Wrought Steel Fittings - Specification - Part 1 : Steel Tubes
IS 1239 : Part 2 : 1992 (RA 2002)	Mild steel tubes, tubulars and other wrought steel fittings, Part 2 Mild steel tubulars and other wrought steel pipe fittings

© 2022 MECON Limited All rights reserved

IS 1391 : Part 1 : 1992 (RA 1999)	Room Air Conditioners - Specification - Part 1 : Unitary Air Conditioners
IS 1391 : Part 2 : 1992 (RA 1999)	Room air conditioners: Part 2 Split air conditioners
IS 2712 : 1998 (RA 1999)	Gaskets and packings - compressed asbestos fibre jointing
IS 3588 : 1987 (RA 1999)	Specification for Electric Axial Flow Fans
IS 3589 : 2001 (RA 2006)	Steel Pipes for Water and Sewage (168.3 to 2 540 mm Outside Diameter) – Specification
IS 3677 : 1985 (RA 2006)	Specification for Unbonded Rock and Slag Wool for Thermal Insulation
IS 4671 : 1984 (RA 2004)	Expanded polystyrene for thermal insulation purposes
IS 4894 : 1987 (RA 1999)	Centrifugal fans
IS 5312 : Part 1 : 2004	Swing Check Type Reflux (Non-Return] Valves for Water Works Purposes - Specification - Part 1 : Single-Door Pattern
IS 5822 : 1994 (RA 2000)	Code of Practice for Laying of Electrically Welded Steel Pipes for Water Supply
IS 7613 : 1975 (RA 2001)	Method of testing panel type air filters for air conditioning and ventilation purposes
IS 7896 : 2001	Data for Outside Design Conditions for Air Conditioning for Indian Cities
IS 8148 : 2003	Package air conditioner
IS 8183 : 1993 (RA 2004)	Thermal Insulation – Bonded Mineral wool
IS 10470 : 1983 (RA 2000)	Specification of air cooled heat exchanger
IS 11304 : 1985 (RA 2003)	Code of practice for control of air pollution in iron and steel plants
IS 11327:1985	Requirements for refrigerants condensing units
IS 11329 : 1985	Specification for Finned Type Heat Exchanger for Room Air Conditioner
IS-11338-1985 (RA-1991)	Specification for Thermostats for Use in Refrigerators, Air Conditioners, Water Coolers and Beverage Coolers
IS 11446: 1985	Method of Measurement of Airborne Noise Emitted by Compressor Units Intended for Outdoor Use
IS 11461 : 1985	Code of practice for compressor safety
ASHRAE Handbook	'Fundamentals' 'Equipment'
CARRIER Handbook	Air Conditioning System Design by 'Carrier Air Conditioning Company'
ISHARE Handbook	ISHRAE Handbook

For specific internal heat load due to equipment, lighting, solar radiation, occupancy and inside design conditions refer job requirement of technical specification. The air-conditioning

© 2022 MECON Limited All rights reserved

system will be designed to operate continuously round the clock twenty four (24) hours a day for all seasons of the year.

The following design ambient data shall be considered for selecting and sizing various equipment for chilled water plant and air conditioning systems :

SEASON	TEMPERATURE ^{0}C (DBT)	RELATIVE HUMIDITY (%)
SUMMER		
Hot Zone side (20 m from hot metal/liquid steel handling)	60	
Other zones	42.6	27
MONSOON	34.1	50
WINTER	6.4	-

Unless otherwise specified in the technical specifications, all air conditioned premises shall be maintained at 23±2 ^{0}C and 55±5 % RH.

All window glasses in air-conditioned premises shall be double glass type and airtight double door entry provision shall be kept for these premises.

For improved water quality in refrigeration system chemically treated water shall be considered as make-up for corrosion protection. Alternatively captive soft water plant shall be installed for make-up water supply to A/c system.

Chilled water pipe line shall be laid over ground. For better distribution of chilled water in the network, ring main shall be considered. Alternatively reverse return line shall be considered for vertical chilled water distribution at different floor. At the end of main supply and return chilled water line provision shall be kept with isolation valve for hooking up with adjacent plant chilled water network.

Preferably Exhaust fan RPM shall not exceed 900. All pumps (above 15m^3/hr capacity) shall be horizontally split type with maximum RPM of 1500. Monoblock pump can be used for capacity less than 15 m^3/hr

Remote monitoring from central control room through main automation system for all critical areas under AC systems shall be provided. Provision for monitoring of chilled water flow quantity, temperature and served premises temperature shall be kept from central control room station .

Chilled water plant shall be selected such that it shall have 20 % more capacity rating than design calculation for future scope and interconnection with other adjacent plants.

Duct line velocities shall be as mentioned in ES13

Noise level generated in Central AC plant, Package AC plant, AHU and duct line shall not be transmitted to the served premises. Noise level in the served premises will not exceed 65 dB (A).

© 2022 MECON Limited All rights reserved

Make up air supply to AHU / package AC plant room shall be provided with filter and damper.

Filter: Efficiency of pre filter will be 90% down to 10 micron and fine filter will be 99% down to 5 micron. High efficiency filter will be installed in the supply air duct at the discharge end of blower in line with job specification requirement. For details refer ES15.
Local control of fan, pump, blower shall be provided near installation area for ON/OFF operation as required.
For control of temperature and dehumidification of the conditioned premises, thermostat and humidistat will be provided in the package A.C. plant room/ AHU Room .

Strip heater box for humidity Control:

The strip heater will be installed in the supply air duct at the discharge end of blower for dehumidification purpose and the strip heater will be interlocked with the blower unit to prevent independent control/ switching of heaters. Safety thermostat shall be installed in the duct line near strip heater for safety precaution. Strip heater box will comprise of finned heater, mounting plate, heater box/ casing made of 20 SWG G.I. sheet, cable terminal, terminal box with handle, 40x40x3 MS angle flange/ frame. Strip heater box will be placed/ inserted in supply air duct. Safety thermostat will be mounted on strip heater package to prevent overheating.

Humidification kit (Pan Humidifier) for humidity control:

Pan type humidifier shall be installed in the AHU / Package AC room for adding moisture if required for critical control of R.H. Level. The humidification kit will comprise of a pan, immersion heaters (3 Nos.), immersion heater cover box with handle, 15 NB pipe connection with float valve for make up water, 15 NB pipe connection for over flow, 15 NB pipe connection with valve for drain, thermostat, earth stud, etc. Over flow pipe and drain pipe will be connected together after/ below the valve of drain pipe. The humidifier will be insulated with 50mm thick mineral wool (T.F. quality). Safety thermostat will be provided in the pan humidifier to prevent it from dry heating.

Condenser cooling circuit.

Centrifugal pump and cooling tower for condenser cooling shall be supplied in line with job specification requirement for water-cooled type condensing unit. For air cooled condenser unit selection maximum ambient temperature factor shall be considered for capacity selection

Rubber/Neoprene gaskets will be used on all bolted joints as a seal against water leakage.

Water pipe line will be of MS Heavy (C) Class as per IS 1239 : Part 1 : 2004 upto a size of 150 NB and for sizes beyond 150 NB MS, spirally welded, 6mm thick & conforming to IS 3589: 2001 (RA 2006) shall be provided. Pipe fittings up to 150 NB will be as per IS 1239 : Part 2 : 1992 (RA 2002). Fabricated fittings manufactured from pipes shall be provided for pipes of size 200 NB & above.

Velocity of water in pump suction line and delivery line will be within 1 and 2 m/sec respectively.

© 2022 MECON Limited All rights reserved

Pot /Duplex strainer will be provided in suction line of pump and ball valve/ butterfly valve will be provided in the delivery side of pump.

Butterfly valve/ ball valve will be provided in water pipeline at condenser inlet & outlet, AHU cooling coil inlet & outlet, pump inlet & outlet.

For better distribution of chilled water in the network in vertical line reverse-return line shall be provided for balancing of water flow at consumer points. However for multiple consumer points in horizontal line balancing valve shall be provided at chilled water return branch line . Insulated drain piping network is to be included as required for steam condensate drain, with isolation valves at proper places.

Pipe supports will be fabricated from mild steel and coated with appropriate rust preventive primer and finish paint. Where pipe and clamp are of dissimilar material a gasket will be provided in between.

All piping will be tested to hydrostatic test pressure of at least one and half times the maximum of operating pressure for period of not less than 2 hours.

Thermal and acoustic insulation :

For details refer ES17. Thermal and acoustic insulation for air conditioning systems shall be considered in line with job specification requirement. However, following minimum insulation work shall be considered**.**

a) Inside surface of the packaged a/c blower/AHU Blower section.
b) Supply air tail end duct to prevent condensation
c) All supply air and return air duct line passing through non-air conditioned premises.
d) Acoustic insulation of duct line at blower outlet up to 5 m length minimum.
e) Condensate drain
f) Under deck insulation of sunlit exposed roof
g) Chilled water pump, chilled water pipeline, valves, chiller, expansion tank

Fire safety

Combustible materials, like insulating material will be used with utmost care for fire safety. No other than combustible material will be used anywhere in the entire air-conditioning system. AC system blower and motorized fire dampers / solenoid operated fire dampers in the duct, shall be inter locked with fire detection system to stop air flow in case of fire.

Control & Instrumentation

The following instrumentation and necessary interlock and controls shall be provided for air conditioning system :

a. HP/LP cutout switch.
b. Cooling thermostat, heating thermostat, Operating and antifreeze thermostat & Humidistat.
c. Pressure gauge & temperature gauge (150-mm dial type)

© 2022 MECON Limited All rights reserved

d. Water flow switch /differential pressure switch with interlock and signal in chilled & condenser water systems.
e. Dry bulb & wet bulb thermometer for all major air conditioned premises.
f. Thermostatic expansion valve, sight glass, refrigerant strainer,
g. Steam pressure and flow control of Vapor Absorption based system .
h. Flow meter to measure chilled water flow and condenser cooling water flow rate
i. Flow control valve in chilled & condenser water line
j. Any other instrumentation not specifically mentioned above, but required for the air conditioning system will be indicated & provided by the Tenderer.

Guidelines to eliminate interference between ducts, lighting and false ceiling

Minimum clearances for duct routing will be as follows :

A minimum clearance of 100 mm will be provided between beam bottom and top of duct to take care of duct erection, flanges, insulation and allowances for civil construction.

Minimum clearance of 200 mm will be provided between duct bottom and false ceiling to take care of collar fitting, variation in levels of false ceiling and floor levels, if any.

The successful Tenderer will study the false ceiling drawing and carry out any additional grid work, if found necessary, based on diffuser sizes. Size of the diffuser color will match with false ceiling grid. For served premises, return air recess may be provided at the periphery all around.

Sequence of preparation of drawings

i) Duct routing drawing will be prepared based on air conditioning requirement.
ii) Duct routing and diffuser locations will be checked for interference if any with light fittings and false ceiling grid as per the Architectural/Electrical drawings. The diffusers and light fittings will be in different rows, as far as possible.
iii) The finalized duct/diffuser layout drawing will be drawn on the false ceiling grid drawing before submission for approval.

Construction supervision

Interference during construction stage due to lack of supervision and co-ordination etc., will be corrected during erection by the Successful Tenderer of AC system. The false ceiling Tenderer will draw the grid on the ceiling. The Successful Tenderer of AC system will make the exact location of diffusers on the ceiling. Similarly, locations of light fittings on the ceiling shall be considered. The Successful Tenderer of AC system will co-ordinate in this regard with other Contractors to avoid any interference at a later stage. By using plumb, from locations of diffusers drawn on ceiling, the duct fabricator will erect the main and branch ducts. However, collars should be cut only after the false ceiling is properly leveled.

Suggested sequence of operation

a. Under deck insulation shall be completed.
b. Main duct will be erected by the Successful Tenderer.
c. Hangers for false ceiling & lighting etc., will be placed.
d. Skeleton false ceiling with grid main runners will be erected.

© 2022 MECON Limited All rights reserved

e. Branch duct to be erected as per center lines of grid/main runner.
f. False ceiling to be leveled and grid to be provided for lights and diffusers.
g. Collars to be cut by the Tenderer to match the false ceiling grid and level.
h. Fixing of diffusers on to the collars after leveling the false ceiling.
i. The diffuser level and false ceiling level will be properly matched for good aesthetic appearance. The false ceiling panel opening will be done by the Tenderer for diffuser fixing.
j. The AC system Tenderer will plan the activities of duct erection in consultation with other Tenderers, (namely, Electrical and Civil) so as to avoid delays and extra work by all concerned.
k. Concerted efforts will be made by the AC system Tenderer together with other agencies for proper erection of ducting and diffusers avoiding any interference with electrical works and false ceiling grid.

03. Data to be furnished by the Tenderer along with Offer

The following data shall be furnished by the tenderer along with their offer.

Type of refrigeration / air conditioning system
Total capacity of air conditioning system
Make of equipment
Design cooling load
Indoor climatic condition shall be maintained
Total power requirement
Total water requirement
Any specific design consideration
Noise level at 1m distance from the AC equipment
Noise level at served premises

© 2022 MECON Limited All rights reserved

2.0 SYSTEM SPECIFICATION OF DUST EXTRACTION SYSTEM (SS2)

01 General

This specification outlines the minimum requirement for design, engineering, selection, manufacture, test and supply/fabrication of Dust Extraction System with all accessories required to be installed to achieve desired performance in all respects. Specific technical requirement of Dust Extraction System if any, shall be mentioned in the job specification/data sheet as furnished along with the Technical Specification.

Brief description of Dust Extraction System is given below under clause No. 02. The point wise list of data to be furnished by the tenderer along with the offer is mentioned below under clause No. 03.

02. Description

Dust extraction systems shall comprise of suction fan, dust extractor, ducting network, dust disposal system, electrics, instruments & controls. This specification specifies general requirement of Dust Extraction System for different applications. In general following equipment for dust extraction systems shall be considered as described in respective equipment specification.

- BAG FILTERS – ES3
- CENTRIFUGAL FAN – ES4
- CENTRIFUGAL PUMP – ES5
- CYCONES, MULTI-CLONES, PRE-COLLECTOR – ES10
- DUCTING NETWORK FOR DE SYSTEM – ES12
- ELECTROSTATIC PRECIPITATORS – ES14
- THERMAL INSULATION FOR HOT APPLICATION – ES18
- SCRUBBER FOR DE SYSTEM APPLICATION – ES21
- WATER LINE VALVES – ES24

Design Criteria

All the rotating parts shall be statically and dynamically balanced. Monitoring ports in ducting and stack with platforms, approach ladders/ stairs and other requirements shall be strictly as per the latest emission standards published by Central Pollution Control Board.

The efficiency of the dust cleaning equipment shall be such that the emission from stack should not be more than 50 mg/Nm3 unless other wise specified in the job specification. The average inlet air dust concentration may be taken as 10~15 gm/Nm3 unless otherwise specified in the job specification.

The dust extraction systems shall be such that the work zone dust concentration for Total Suspended Particulate Matter (SPM) shall be limited to 5mg/Nm³ over background level and Respirable Particulate Matter (RPM) of particle size less than 10 microns should be

© 2022 MECON Limited All rights reserved

limited to 2mg/Nm3 over background level unless otherwise specified in the job specification.

The capacities of the dust extraction systems shall be selected considering at least 10% excess margin over the calculated values.

Following Indian Standards shall be followed as design guidelines:

IS 638 : 1979 (RA 1999)	Specification for Sheet Rubber Jointing and Rubber Insertion Jointing
IS 800 : 1984 (RA 1998)	Code of practice for general construction in steel
IS 822 : 1970 (RA 2003)	Code of procedure for inspection of welds
IS 875 : Part 1 to Part 5 : 1987 (RA 2003)	Structural design
IS 1239 : Part 1 : 2004 & IS 1239 : Part 2 : 1992 (RA 2002)	Steel Tubes, Tubulars and Other Wrought Steel Fittings - Specification - Part 1 : Steel Tubes & Mild steel tubes, tubulars and other wrought steel fittings, Part 2 Mild steel tubulars and other wrought steel pipe fittings
IS 1364 : Part 1 to Part 6: 2002	Hexagonal nuts & bolts
IS 2062 : 2006	Hot Rolled Low, Medium and High Tensile Structural Steel
IS 2309 : 1989 (RA 2005)	Code of practice for the protection of buildings and allied structures against lightning
IS 2712 : 1998 (RA 1999)	Gaskets and packings - compressed asbestos fibre jointing
IS 4894 : 1987 (RA 1999)	Centrifugal fan
IS 6392 : 1971 (RA 1998)	Steel pipe flanges
IS 8183 : 1993 (RA 2004)	Bonded mineral wool insulation
IS 9240 : 1979	Purchaser's data sheet for gas scrubber cooler or absorber
IS 9241 : 1979	Purchaser's data sheet for electrostatic precipitators
IS 10919 : 1984	Glossary of Terms for Electrostatic Precipitators
IS 11304 : 1985 (RA 2003)	Code of practice for control of air pollution in iron and steel plants
IS 14164 : 1994 (RA 2001)	Industrial application and finishing of thermal insulation material at temperature above -80 deg C and up to 700 deg C - Code of practice

The duct lines shall be designed as self balanced systems. Successful tenderer has to furnish pressure drop calculation and system capacity selection calculation before carrying out detail engineering of DE system.

© 2022 MECON Limited All rights reserved

The dust extraction system shall be designed based on norms specified in the Hand Book of American Conference of Governmental Industrial Hygienists (ACGIH) with fines factor and to meet the required fugitive emission standard based on the party's experience.

The Successful Tenderer should calculate and decide the systems capacities of their own using the standard norms. However, in no case, the systems capacities should be less than as specified in job specification.

The dust extraction equipment shall be located near to the building. Approach, handling and hoisting facilities shall be provided for the equipment. Monitoring port holes of 100mm diameter with plug, platforms, approach ladders/ stairs, power socket of single phase, 50 Hz, 230 V, 15 A and monitoring equipment lifting facilities shall be provided as per the Emission Regulations Part-III, published by the Central Pollution Control Board (CPCB).

The height of the stack shall be as per CPCB norms or 2 to 3m above the nearest highest building or minimum 45 m or as specified in the job specification, whichever is higher. The efflux velocity from the stacks for dust extraction systems shall be maintained around15m/s (approx.). For rain protection, concentric duct shall be provided on the top of stack, designed such that it restricts rain water entry into stack but allows the gases to move vertically upward with the above mentioned efflux velocity.

Generally the following air velocities shall be considered for the dust extraction systems.

At hood inlet	1.5 m /sec (max)
Ducting	18-25m/ sec

Suction hood for the dust extraction systems shall not be less than 5 mm thick MS sheet. The ducting shall be of circular cross section.

Duct lines shall have cleaning hatches of size 100mm x 75mm with air tight seals for easy cleaning of accumulated dust near bends & inter connections.

Horizontal duct shall be avoided as far as possible. Vertical/ inclined ducting shall be provided.

The Successful Tenderer shall include duct supports in their scope as follows:-

a) In-house ducting shall be suitably supported at approx. 3m intervals. Ducting inside the building shall be supported on the floor or from the column/ civil beam/building structure/technological structure etc. as applicable. The location and type of supporting arrangement shall be decided by the Successful Tenderer in consultation with purchaser / purchaser's consultant.

b) Trestle supports shall be provided on ground for the ducting outside the building.

The dust extraction system shall be interlocked with the technological equipment/ conveyors. The sequence of operation shall be such that the dust extraction system shall

© 2022 MECON Limited All rights reserved

start 5 minutes before start of the technological equipment and shall stop 5 minutes after stoppage of the technological equipment.

Dust Disposal System

Dust disposal system shall include chain / screw conveyors, double cone valve / rotary air lock valve, dust moistener / telescopic chute, dust storage hopper / rotary feeder etc.

a) Chain / screw conveyors and double cone valves will be provided below the dust extraction equipment hoppers for disposal of dust. Chain / screw conveyors will have bearings with outside greasing terminal, protected from dust by packing around the glands. All the vulnerable parts requiring frequent attention will be readily accessible. If two flights of a screw are coupled then, overlapping of each flight at center point shall be made for smooth flow of material.

b) Double cone valves will be made of cast iron with the carrying side hard faced. The double cone valve will be complete with shaft of EN8, cast iron housing, geared drive, geared box/geared motor etc.

c) Chain conveyors shall have the following specifications unless otherwise specified in the job specifications.

- Forge link chain material = 16 Mn Cr5
- Strength of link (Breaking load) = 20 t.
- Length to suit design requirement
- Hardness of chain link - 55-60 HRC.
- Flight thickness - 10 mm.
- Bottom Plate - IS 2062: 2006 - 8 mm thick with 10 mm Hard Liner.
- Side Plate - IS 2062: 2006 - 6mm thick with 10mm Hard Liner.
- Top cover - IS 2062: 2006 - 3.15 mm thick.
- Liner hardness shall be minimum 500 BHN
- Capacity: not less than 3 t/ hr or as specified in the job specification
- Chain speed: not more than 0.06 m/ sec

d) Zero speed switches will be provided for all dust disposal system drives.

e) Compensator / Expansion Joint between rotary feeder and the chain conveyors, between two conveyors and between dust moistener and rotary feeder will be provided to facilitate maintenance. Slide gates will be provided before all the double cone dust valves/rotary feeder. For calculation and design of structural members, accidental fill up of dust up to top of hoppers in worst case will be considered by Successful Tenderer.

f) Dust hopper/ Holding hopper

Dust storage hoppers shall be provided for each dust collector. The hopper shall be of pyramidal construction with 65° valley angles. The hopper shall have a 2 days' dust storage capacity. Rack and pinion sliding gate (motorised) arrangement / rotary air-lock valve shall be provided at the hopper discharge. Dust conditioner

© 2022 MECON Limited All rights reserved

of double screw type / disc palletizer with controlled moisture addition shall be provided at storage hopper outlet. Adequate motorised bin vibrators shall be provided in each hopper. Disposal of dust to the closed truck / pneumatic system shall be done through telescopic chute. Manually operated slide gate shall be provided above each rotary air-lock valve / rack & pinion slide gate for isolation purpose for maintenance. Necessary hopper heating arrangement and hopper insulation shall be provided to avoid condensation especially in ESP based systems.

g) Rotary Air Lock Valve

Rotary air lock valve shall be provided below each bag filter hopper for disposal of dust. Rotary air lock valve shall be made of cast iron with the carrying side hard faced. The rotary air lock valve shall be complete with shaft of EN8, cast iron housing, rotor blade etc. Rotary air lock valve is directly coupled to gear box & motor. Rotary air lock valve capacity shall be based on 50% filling volume. Rotor blade shall be of MS construction and hard faced. Face of blades shall be hard faced by 20x15 diamond weld beads (2 to 3 mm ht) to achieve 250-300 BHN hardness.

Casing thickness	: 6 mm min.
Rotor blade thicknes	: 5 mm min.
Minimum Capacity	: 0.4 t/h for RAV of each module hopper of bag filter / ESP
	: 50 t/h below dust storage hopper
RPM of RAV	: Not more than 20

Capacity of RAV may increase as per requirement of job specification.

h) Pug Mill / Telescopic Chute :

Pug mill will be provided below storage hopper of minimum capacity 50 t/h unless specified otherwise in the job specification. RPM shall not be more than 20. Water spray arrangement shall be provided inside the pug mill. Piping, nozzles, valves and all other accessories shall be provided. A solenoid valve shall be provided in water line and interlocked with pug mill drive. Pug mill shall be totally enclosed, twin paddle type mixer. Parallel mixing paddles will be mounted on individual shaft. The unit shall be directly coupled with a gear box & motor. All the material will be conveyed through the mixing chamber and water spray on the material through a series of header located along the top of the chamber. Each header shall be provided with a number of spray nozzles.

In case of discharge into closed trucks, telescopic chute shall be provided for discharging the dust from the storage hopper.

i) Following minimum Instrumentation shall be provided apart from any additional requirement mentioned in the job specifications.

- High level/ Intermediate level switch in hopper.
- Hopper heating units as required.
- Temperature and pressure transmitter as required,

© 2022 MECON Limited All rights reserved

- Pressure gauge at inlet & outlet of each dust extractor module and overall.
- Differential pressure switch across dust extraction equipment.
- Master controller and pulsing solenoid valves as required for bag filter.
- Sequential Timer for bag filter application as required.
- Compressed air pressure gauge and pressure regulator as required.
- U – Tube manometer across each module of dust extraction equipment.
- Continuous monitoring of Particulate matter from stack.
- Dry running protection of wet system.

j) Platforms and access stair case

The minimum platform width shall be 1.2 meters. The platforms shall be located at the top of hoppers, level, at the top of the gas cleaning equipment, and at the different levels required for maintenance and operation of the equipment and dampers. A safe guard rail should be provided on the platform. Safe and easy access to the platform shall be provided by providing stairways and railing. Intermediate platforms shall be provided for the bag filters. Following minimum structural member shall be considered.

Hand rail	:	25 NB, IS 1239: 2004
Post	:	32 NB, IS 1239: 2004
Access grating	:	40 depth, 6 thick,
Stair	:	40 C/C, 38° slope
Stair treat	:	250 mm
Max. ht. of riser	:	200 mm

Operating Criteria

As the technological equipment starts dust generation starts at material handling / transfer points.

Duct isolation dampers shall be opened / closed as required, to activate duct routes as per active technological equipment.

The manual butterfly balancing dampers connected to the suction hoods shall be adjusted for adequate suction of dusty air from all the hoods as per design requirement so as to control the escaping of dusts at the dust generation points.

Electrical Interlocking for starting of dust extraction system shall be as follows:

Interlocking to be considered in the MCC to make sure the following sequential starting before the start of technological equipment:

a) Start Screw / Chain Conveyor and Rotary Airlock / Double Cone valve.
b) Activate dust extraction system
c) Start Fan Motor.
d) Open Fan Inlet Damper after appropriate time delay of fan motor starting.
e) Activate duct line Isolation Damper in ducting network to minimize idle suction from non-operating points as per system requirement.

© 2022 MECON Limited All rights reserved

In normal condition, switching off operation of DE system should be followed as per following sequence:

a) Stopping of Technological Equipment
b) Stop Fan Motor after 30 minutes to allow dust removal from duct.
b) Close Fan inlet damper
c) Stop Rotary Air Lock / Double cone valve after appropriate time delay.
d) Stop Screw / Chain Conveyor
e) Deactivate Dust Extraction Equipment

Note : In case the RAL/Double Cone Valve trips the fan motor should also trip to avoid uncontrolled accumulation of collected dust in Dust Extraction Equipment hopper which otherwise may result into choking/clogging of Dust Disposal System. The Successful Tenderer will examine the above logic and operating principle of the DE system and changes, if any, necessary for trouble free operation of the system being offered by the party shall be indicated.

03. Data to be furnished by the Tenderer along with offer

Type of dust extraction system
Total capacity of dust extraction system
Make of equipment
Design suction quantity
Outlet emission quantity
Work zone dust concentration
Total power requirement
Total water requirement
Any specific design consideration
Noise level at 1m distance from the dust extraction equipment
Space requirement (L x B x H)
Support / Structure / Weathering shed DE system
Dust Disposal Arrangement

- Conveyor, Type, nos. capacity tph
- Rotary air lock valve capacity tph & nos.
- Slide gate (Manual)
- Expansion joint at outlet of RAV
- Rotary feeder
- Dust moistener / Telescopic chute
- Water requirement m3/h at kg/cm2
- Dust bin
- Storage Hopper
  a) Volume in m3
  b) Type
  c) Size (L x B x H)

© 2022 MECON Limited All rights reserved

d) Motor rating kW & Pole of rack and pinion type discharge gate.
e) Material / thickness of hopper

- Zero speed switch of drives

Instrumentation

- Bearing & winding temperature monitor of fan & motor
- Pressure transmitter
- Temperature transmitter
- Level switch
- Thermostat for heaters

Weight of Dust Extraction Equipment & structure

- Structures
- Dust Extraction Equipment - casing, hopper, internals, Insulation & cladding as applicable, storage hopper, expansion joints & dust disposal equipment
- Fan with drive & accessories
- Duct, suction hood & duct line damper
- Steel stack
- Auxiliary equipment as per job specification requirement

© 2022 MECON Limited All rights reserved

3.0 SYSTEM SPECIFICATION OF DUST SUPPRESSION SYSTEM (SS3)

01 General

This specification outlines the minimum requirement for design, engineering, selection, manufacture, test and supply/fabrication of Dust Suppression System with all accessories required to be installed to achieve desired performance in all respects. Specific technical requirement of Dust Suppression System if any shall be mentioned in the job specification/data sheet as furnished along with the Technical Specification.

Brief description of Dust Suppression System is given below under clause No. 02. The point wise list of data to be furnished by the tenderer along with the offer is mentioned below under clause No. 03.

02. Description

There are essentially three types of dust suppression systems applied to control pollution in bulk material handling. They are spraying of only water at material transfer points, spraying a solution of water & chemical compound at material transfer points, a dual fluid water and compressed air supplied through nozzle for production of ultra fine water particles, i.e. fog at material transfer points.

02.1 Plain water type dust suppression system

In plain water dust suppression system in general plain water at high pressure is sprayed over stockpile area. This type of system is envisaged for the stockpile area to suppress the generated dust due to stacking / reclamation. Spray water header will be provided along the stockpiles. Dust suppression system is to be designed to prevent lift of dust from stockpiles. Water spray over the stockpile area is produced by sufficient number of sprinklers suitably installed in a header to cover the entire stockpile area. Plain water may be sprayed at transfer station as per job specification requirement.

The sprinklers should be of swiveling type. Each sprinkler operation cycle is to be controlled by a sequential timer to have optimum consumption of water. Water will be stored in a feed water tank. In the supply waterline to feed water tank float valve shall be provided. One additional quick fill line to water storage tank shall be provided. Water from feed water tank shall be supplied to different spray headers by a high-pressure pump. Sprinkler posts of required height should be installed on the spray header along one or both sides of ores/ coal stock pile area. Before each sprinkler globe valve & solenoid valve shall be provided for manual control and automatic control respectively. The water pump is interlocked with low level switch of feed water tank to prevent the pump from dry running. A pressure switch at the pump discharge line shall be provided to by pass water to storage tank. A solenoid valve in by pass line shall be energized by high-pressure signal from pressure switch. In specific requirements, manual control of sprinklers may be provided as per job specification.

02.2 Chemically treated water type dust suppression system

Chemically treated dust suppression system works on the principle of agglomeration. Dust particles released from material handling become air borne and are made to pass through a blanket of extremely fine water droplets. The dust particle and the droplets

© 2022 MECON Limited All rights reserved

collide and adhere to each other, thus increasing their mass. After a series of such collision the dust particles mass become heavy. The system involves spraying of chemical compound wetting agent and water mixture in certain ratio at each material transfer point. Chemical solution at the pressure of about 4 kg/cm² is supplied at the atomising nozzles. The wetting agent (chemical compound) from drum is transferred to solution tank with the help of metering pump (one working and one reserve). Chemical compound is added in measured quantity in the feed water line to solution tank. The tank is provided with high, low and very low level switch. There are two-solution pumps (one working and one reserve). Any one of the solution pumps can be started if the tank is filled above the low level switch of solution tank and any one of the solenoid valve at spray point is energised. Feed water pump will start when solution level in solution tank reaches low level. Metering pump operation is interlocked with feed water pump. Feed water pump will stop when water level in solution tank reaches high level. In case of very low level in solution tank solution pump will stop. In case of low level in water storage tank feed water pump will stop. A pressure switch at the solution pump discharge line shall be provided to by pass water to solution tank. Solenoid valve in by pass line shall be energised by high-pressure signal from pressure switch. Solenoid valve shall be installed in pipeline in a box at each junction house point to cater to solution spray at belt discharge point and belt receiving point. Solenoid valve operation should be interlocked with conveyor motor and load sensor unit. Conveyor motor running under load will draw high current compared to conveyor running under no load. A current transformer located in the power cable circuit will monitor conveyor motor current and shall be interlocked with the operation of solenoid valve.

Chemically treated dust suppression system should be provided for the material transfer points in junction houses.

02.3 Dry Fog Dust Suppression System

The Dry Fog Dust Suppression ("DFDS"- water atomization with compressed air) system works on the principle of agglomeration. Water and compressed air are mixed in atomizing nozzles which produces ultra fine droplets size fog when sprayed and achieve dust suppression though agglomeration. Dust particles released from a material handling or processing plant which becomes air borne, are made to pass through a blanket of extremely fine fog. The dust particles and the micronic sized fog droplets collide and adhere to each other, thus increasing their mass. After a series of such collisions, the mass becomes heavy enough to cause settlement of the agglomerates on to the larger mass of the material being handled.

The System uses an air Driven Acoustic Oscillator Nozzle which is capable of producing supper fine atomization of water droplets that greatly increase the dust particle to water droplet contact resulting in settlement of dust. The fine droplets evaporate before wetting anything but the dust. The approximate water addition is 0.1% of the weight of material being handled.

Description of Scheme

The DFDS system comprises main equipment installed at the application points and auxiliary equipment installed at central water and compressed air supply point. Brief components of both types of equipment are mentioned below:

- **Main Equipment**

© 2022 MECON Limited All rights reserved

The Main Equipment will include Spray Bar Assemblies fitted with Dual-fluid air Driven Acoustic Oscillator Atomizing Nozzles, Pressure Regulating Units and Flow Activation Stations for ON-OFF Control of the System and Instrumentation for Auto Operation.

- **Auxiliary Equipment**

  The Auxiliary Equipment will include Water Storage and Pumping Unit with duplex Water Filter, Compressors with air receivers and Associated Electrical Works, Air and Water Piping, Enclosures etc.

02.4 Elements of dust suppression system

In general following equipment for dust suppression systems shall be considered as described in respective equipment specification.

- CENTRIFUGAL PUMP – ES5
- WATER LINE VALVES – ES24

Spray nozzles

Spray nozzles for dust suppression systems shall be of fog-jet type and shall have a solid cone spray pattern with a round impact area and minimum spray angle of 60º.

The nozzles should produce spray distribution of fine sized droplets at the given flow rate and pressure and should provide complete coverage of the spraying area or zone.

The nozzle housing shall be made of cast aluminium alloy and the tip shall be of stainless steel conforming to AISI-410 or SS-304 with SS strainer

The nozzles should be of self cleaning type with in-built filters made of brass or stainless steel.

Sprinklers

Circular swiveling type sprinklers shall be provided for dust suppression system of stockpiles to spray water and prevent fugitive dust emission.

The brief specification of the sprinklers is as follows:

Size of inlet connection	:	To suit stand-post pipe size and fittings.
Sprinkler type	:	Circular swiveling type
Material	:	Cast Steel swing arm Cast aluminum alloy body SS nozzle

© 2022 MECON Limited All rights reserved

Throw : To suit size of stockpile and coverage

02.5 Design Criteria

1. The dust suppression systems shall be such that the work zone dust concentration for Total Suspended Particulate Matter (SPM) shall be limited to 5mg/Nm³ over background level and Respirable Particulate Matter (RPM) of particle size less than 10 microns should be limited to 2mg/Nm³ over background level unless otherwise specified in the job specification.

   i. The capacities of the dust suppression systems shall be selected considering at least 10% excess margin over the calculated values.

   ii. Following Indian Standards shall be followed as design guidelines:

a.	IS 638 : 1979 (RA 1999)	Specification for Sheet Rubber Jointing and Rubber Insertion Jointing
b.	IS 800 : 1984 (RA 1998)	Code of practice for general construction in steel
c.	IS 822 : 1970 (RA 2003)	Code of procedure for inspection of welds
d.	IS 875 : Part 1 to Part 5: 1987 (RA 2003)	Structural design
e.	IS 1239 : Part 1 : 2004 & IS 1239 : Part 2 : 1992 (RA 2002)	Steel Tubes, Tubulars and Other Wrought Steel Fittings - Specification - Part 1 : Steel Tubes & Mild steel tubes, tubulars and other wrought steel fittings, Part 2 Mild steel tubulars and other wrought steel pipe fittings
f.	IS 1364 : Part 1 to Part 6: 2002	Hexagonal nuts & bolts
g.	IS 2062 : 2006	Hot Rolled Low, Medium and High Tensile Structural Steel
h.	IS 2712 : 1998 (RA 1999)	Gaskets and packings - compressed asbestos fibre jointing
i.	IS 10221 : 1982 (RA 2006)	Code of practice for coating and wrapping of underground mild steel pipelines
j.	IS 11304 : 1985 (RA 2003)	Code of practice for control of air pollution in iron and steel plants

   iii. The pipelines shall be self balanced without use of valves.

   iv. The Successful Tenderer should calculate and decide the system capacities on their own using the standard norms. However, in no case, the system capacities should be less than as specified in job specification.

© 2022 MECON Limited All rights reserved

v. The dust suppression equipment shall be located near to the application area. Approach, handling and hoisting facilities shall be provided for the equipment.

vi. The water line velocity for dust suppression systems shall be limited to within 1 m/s for suction line and 2 m/s for delivery lines.

vii. Pipeline shall be of heavy class construction .

viii. The Successful Tenderer shall include pipe supports in their scope as follows-

a) In-house piping shall be suitably supported at approx. 2.5m intervals. Piping inside the building shall be supported on the floor or from the column/ civil beam/building structure/technological structure etc. as applicable. The location and type of supporting arrangement shall be decided by the Successful Tenderer in consultation with purchaser/or purchaser's consultant.

b) Outdoor piping shall mostly be led through underground trench work with wrapping coating arrangement. Overground trestles or pedestals may be used for specific applications.

ix. Instrumentation

a) High level / Intermediate level / Low level switch in water tanks.
b) Pressure gauge at pump outlet of dust suppression system
c) Pressure/ flow switch at pump outlet
d) Sequence timer for sprinkler operation control as required.
e) Load monitoring switch for noting conveyor running on load
f) Flow meter and totaliser at pump discharge line for large DS system or as specified in the job specification.
g) Flow activation station and Pressure regulating station for DFDS
h) Dry running protection for pumps.

03 Data to be furnished by the Tenderer along with offer

The following data shall be furnished by the tenderer along with offer.

Type of dust suppression system
Total capacity of dust suppression system
Make of equipment
Design water flow quantity
Work zone dust concentration
Total power requirement
Total water requirement
Any specific design consideration
Noise level at 1m distance from the dust suppression equipment
Space requirement (L x B x H)
Support / Structure / Weathering shed for DS system
List of drives
Spray nozzle make rating, quantity
Spray nozzle material of construction

© 2022 MECON Limited All rights reserved

Sprinkler make, rating, quantity, throw
Sprinkler coverage diagram for stockpiles
Sprinkler material of construction
Load monitoring switch type, quantity and rating
Sequence timer type, quantity and rating
Solenoid valve type, quantity and rating
P&ID

© 2022 MECON Limited All rights reserved

4.0 SYSTEM SPECIFICATION OF VENTILATION SYSTEM (SS4)

01. General

This specification outlines the minimum requirement for design, engineering, selection, manufacture, test and supply/fabrication of Ventilation System with all accessories required to be installed to achieve desired performance in all respects. Specific technical requirement of Ventilation System if any shall be mentioned in the job specification/data sheet as furnished along with the Technical Specification.

Brief description of Ventilation System is given below under clause No. 02. The point wise list of data to be furnished by the tenderer along with the offer is mentioned below under clause No. 03.

02. Description

Ventilation system shall be provided to maintain proper working condition environment compatible with human hygienic requirements and to maintain conditions necessary for proper storage of materials and working of plant and equipment. The ventilation system shall generally include one or more items of equipment and accessories such as fans, air filters, duct work, pumps, air washer, air supply grills, dampers, insulation, instrumentation and controls, electrics, etc.

Ventilation system will be designed considering the climatic conditions prevailing in the region and the plants will generally be installed in separate plant rooms independent of the served premises. The plant rooms will be provided integral with and adjacent to the served premises at proper locations on considerations of convenience of routing of ducts/pipes, availability of fresh uncontaminated air and creating least disturbance to the adjacent premises in terms of vibration and noise.

Ventilation system will be provided with adequate measures for safety and fire fighting for fire hazardous areas and shall be of flame proof/explosion proof construction.

In general following equipment for ventilation systems shall be considered as described in respective equipment specification.

- AIR WASHER – ES2
- CENTRIFUGAL FAN – ES4
- CENTRIFUGAL PUMP – ES5
- CHAIN PULLEY BLOCK – ES8
- DAMPER – ES11
- DUCTING NETWORK FOR HVAC SYSTEM – ES13
- FILTER DRY TYPE – ES15
- THERMAL INSULATION FOR HVAC APPLICATION – ES17
- PROPELLER FAN – ES20
- TUBE AXIAL FAN – ES23

© 2022 MECON Limited All rights reserved

Ventilation facilities

Buildings and shops will generally be designed to provide adequate natural ventilation. Mechanical ventilation will be provided for premises where adequate ventilation cannot be provided by natural means alone. Depending upon the specific requirement, the shops/buildings will be provided with either exhaust ventilation or plenum ventilation. The system design will take into account the requirements of air change as well as excess heat removal. Filters will be provided with plenum systems. By plenum ventilation, the served premises will be pressurised to 2-3 mmWC to avoid ingress of dusty air. Hot work areas will be provided with portable man-coolers for spot cooling. Man-coolers will be provided also in a few other areas where the premises are manned and have high heat radiation. General details and types of system to be considered is mentioned below. However, specific requirement of ventilation system shall be provided in line with job specification requirement.

The temperature of the Electrical premises and other premises served with washed air ventilation shall not exceed 38°C right through the year. A minimum of 15 air changes shall be considered for washed air system irrespective of heat load. Mist eliminator in air washer shall be made of PVC .

The temperature of the areas provided with dry pressurized ventilation or exhaust ventilation shall not exceed 3 deg C above the ambient at any part of the year. A minimum of 20 air changes shall be considered for dry pressurized and exhaust ventilation systems irrespective of heat load.

In cases where ventilation is provided using propeller or tube axial fans, care shall be taken to provide multiple number of fans of equal capacity and spacing to ensure proper distribution of air.

The following design ambient data shall be considered for selecting and sizing various equipment for ventilation systems :

SEASON	TEMPERATURE ^{0}C (DBT)	RELATIVE HUMIDITY (%)
SUMMER		
Hot Zone side (20 m from hot metal / liquid steel handling)	60	
Other zones	40.6	30
MONSOON	32.2	58
WINTER	6.4	-

Ventilation facilities for different premises

Location/Shop	**Facilities**
Electrical premises, Switch gear rooms, Cable basements	Pressurised ventilation with or without air washer as per job specification requirement

© 2022 MECON Limited All rights reserved

of Electrical sub stations	
Compressed air stations	Exhaust ventilation
Battery rooms	Exhaust ventilation with acid proof fan and explosion proof motor
Overground Pump houses	Exhaust ventilation
Underground Pump houses	Push-Pull type ventilation with 50% exhaust of supply air.
Cable and Pipe tunnels	Push-Pull type ventilation with 50% exhaust of supply air. Fire barrier wall shall be provided to sectionalize cable tunnels as per statutory norms and site conditions
Hydraulic rooms	Exhaust ventilation
Toilets/Stores/Pantry rooms	Exhaust ventilation
Hot working spots	Portable ventilation with man coolers

Following Indian Standards shall be followed as design guidelines:

IS 638 : 1979 (RA 1999)	Specification for Sheet Rubber Jointing and Rubber Insertion Jointing
IS 800 : 1984 (RA 1998)	Code of practice for general construction in steel
IS 822 : 1970 (RA 2003)	Code of procedure for inspection of welds
IS 875 : Part 1 to Part 5: 1987 (RA 2003)	Structural design
IS 1239 : Part 1 : 2004 & IS 1239: Part 2: 1992 (RA 2002)	Steel Tubes, Tubulars and Other Wrought Steel Fittings - Specification - Part 1 : Steel Tubes & Mild steel tubes, tubulars and other wrought steel fittings, Part 2 Mild steel tubulars and other wrought steel pipe fittings
IS 1364 : Parts 1 to 6: 2002	Hexagonal nuts & bolts
IS 2062 : 2006	Hot Rolled Low, Medium and High Tensile Structural Steel
IS 2712 : 1998 (RA 1999)	Gaskets and packings - compressed asbestos fibre jointing
IS 4894 : 1987 (RA 1999)	Centrifugal fans
IS 3588 : 1987 (RA 1999)	Specification for Electric Axial Flow Fans
IS 8183 : 1993 (RA 2004)	Bonded Mineral Wool Insulation
IS 2312 : 1967 (RA 2000)	Propeller type AC ventilating fans

03 Data to be furnished by the Tenderer along with offer

The following data shall be furnished by the tenderer along with the offers.

Type of ventilation system
Total capacity of ventilation system
Make of equipment

© 2022 MECON Limited All rights reserved

Design cooling load
Indoor climatic condition shall be maintained
Total power requirement
Air change/hr
Total water requirement
Any specific design consideration
Noise level at 1m distance from the ventilation equipment
Noise level at served premises

5.0 ES1 - AIR HANDLING UNIT / FAN COIL UNIT

01. General

This specification outlines the minimum requirement for design, engineering, selection, manufacture, test and supply of Air Handling Unit (AHU) / Fan Coil Unit (FCU) with all accessories to make operation of Air Handling Unit (AHU)/Fan Coil Unit (FCU) complete in all respects. Specific technical requirement of Axial Flow Fan if any shall be mentioned in the job specification/data sheet as furnished along with the Technical Specification.

Brief description of the Air Handling Unit (AHU) / Fan Coil Unit (FCU) is given below under clause No. 02. The equipment-wise list of data to be furnished by the tenderer along with the offer is shown below under clause No. 03.

Job specification of the project shall be referred for any specific requirement.

02. Description

Air Handling Units (AHUs)

The AHUs shall be of fabricated construction, draw through type. The housing/casing shall be of double skin construction. The frame work shall be of extruded aluminium profile frames and peralluman nylon glass fibre reinforced corner joints. Double skin sandwich panels shall be fabricated from inside with 22g galvanised sheet steel and outside with 22g high polymer polyester coated (pre painted) galvanised sheet steel with protection films on top. Minimum zinc deposition shall conform to Grade 275 of IS 277: 2003. The 25 thk. panels shall be PUF injected with PUF density of 40 kg/m^3 to ensure high rigidity and sound attenuation characteristics. The unit sections shall be mounted on galvanized sheet steel channel & aluminium die cast legs. Panels shall be fitted to Al frame work with neoprene gaskets & screws. The framework of AHU casing shall be assembled by means of reinforced nylon corners. Necessary supports shall be provided to slide the coil in the drain pan. Outlet shall be provided on both sides of the drain pan. The fan section of the casing shall be provided with access door. Aluminium die cast / Chrome plated hinges & handles shall be used in access door. The AHU shall comprise of the following sections :

Filter section.

Cooling coil section

Fan section:

© 2022 MECON Limited All rights reserved

Filter section shall house 48-50 mm thk. pleated filters conforming to EU-3 Class. These filters shall be vertically arranged in the frame and all mounted directly on AHU for ease of removal.

Cooling coil section shall have chilled water cooling coils constructed with copper tubes and fins of aluminium. Thickness of Cu tubes shall be minimum 0.75 mm. Fin spacing shall be minimum 10 fins per inch and minimum thickness of fins shall be 0.16 mm. The fins of the coil shall have a mild ripple with die formed directional guide channels to improve heat transfer efficiency. Cooling coil header shall be of GI. Chilled water coils shall be provided with suitable vent and drain connections. Drain pan shall be fabricated from minimum 22 G stainless steel sheet and stainless steel nipple for drain connection. Necessary slope shall be provided to facilitate fast removal of condensate. Drain pans shall be thermally insulated. The entire assembly shall be mounted on PUF insulated bottom panel. Condensate drain pipe of required length with sealing loop shall be provided and insulated. The drain from drain pan shall be connected to floor drain. Air velocity through cooling coil shall not exceed 2.5 m/sec and pressure drop across the coil shall not exceed 15 mmWC. Water pressure drop through cooling coil shall be limited to 5 mWC. Normally AHUs shall have 6 rows of cooling coil. However, for 100 % fresh air application, 8 rows of cooling coil shall be provided.

Fan section shall house centrifugal fan(s), which shall be forward curved, multiblade double width double inlet type. Impeller blades shall be fabricated from heavy gauge galvanised sheet steel or MS with spray galvanized. The wheel & housing shall be fabricated from heavy gauge galvanised steel. The fan section shall be mounted above the coil section. Fan speed shall not be more than 750 RPM. Flexible connection & volume control damper (opposed blade type) shall be provided at fan outlet.

Blower fan shall be statically and dynamically balanced as per ISO1940 Gr 2.5. The first critical speed of the rotating assembly shall be at least 25% above the operating speed. The motor & blower assembly shall be isolated from the main frame by means of spring. Motor & fan assembly shall be mounted on base frame and fixed on antivibration rubber mounts. Motor shall be mounted on a slide rail to adjust the belt tension. Fan shall be coupled to motor by V belts . V belts shall be provided with guards that do not impede the air flow to the fan inlet. Fan static pressure shall be minimum 65 mmWC or more (as required based on pressure drop calculation). All the AHUs shall be selected on the basis of min. 500 CFM/TR.

Chilled water flow through AHU will be controlled by 3 way mixing valve. A bypass line around 3 way valves shall be provided. Make of 3 ways valve shall be Honeywell/ Johnson/ Siemens/ Sauter. Typical AHU connection details shall be as shown below:

© 2022 MECON Limited All rights reserved

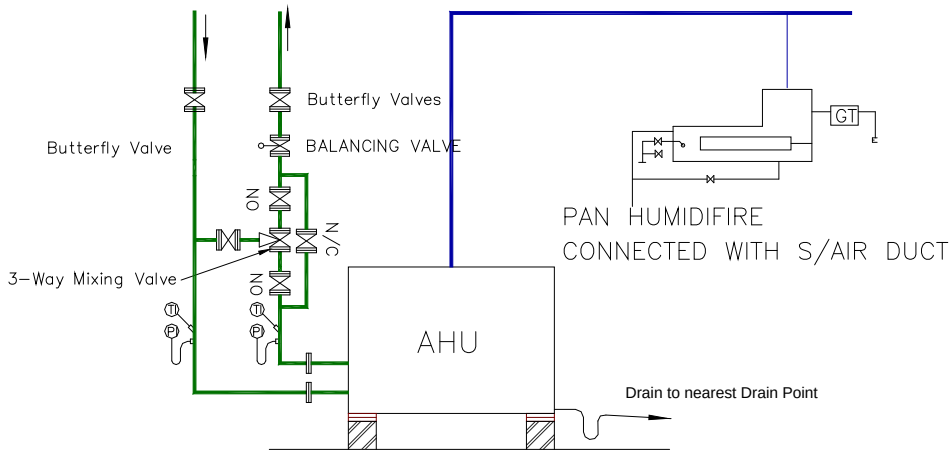

TYPICAL AHU CONNECTION DETAILS

Temperature control in AHU shall be provided by modulating the chilled water flow in the cooling coils by 3-way mixing valve.
Temperature switch and transmitter for monitoring of chilled water and served premises temperature shall be provided.

Fan Coil Units (FCUs)

Fan coil units (FCUs) shall be of fabricated construction. They shall be wall mounted or ceiling suspended type and shall be installed inside the served premises for small isolated cabins / rooms. The following points shall be taken care of in FCUs.

- G.I. casing and powder coated components shall be provided.
- The fan deck assembly shall have easy access for maintenance.
- The unit shall be provided with 3 / 4 speed motor.
- The units shall be fabricated of minimum 1 mm thick galvanised steel duly powder coated with polyester powder in broken white shade.
- The coil shall be minimum 3 row deep copper with internal groove for efficient heat transfer. Minimum O.D. of the tube shall be 9 mm. The coil shall be provided with copper fins.
- Centrifugal forward curve fan, statically and dynamically balanced, shall be provided.
- The unit shall be provided with S.S. insulated drain pan of minimum thickness 0.8 mm The insulation shall be cladded with 26G aluminium sheet.
- EU-3 class synthetic, woven washable type filters in aluminium frame shall be provided.
- Chilled water flow control and Remote operation shall be provided

© 2022 MECON Limited All rights reserved

03. Data to be furnished by the Tenderer along with offer

A. General

a) Make & Model No.
b) Type of unit (Horizontal/vertical)
c) Overall dimensions (mm)
d) Weight (kg)
e) Noise level at 1 meter distance in dB(A)
f) Vibration level
g) Vibration isolations details

B. Fan Section

a) Air quantity (m^3/hr)
b) Total/static pressure (mmWC)
c) Fan speed (RPM)
d) Fan dia (mm) & number
e) Balancing (Static and dynamic)
f) Fan motor (KW)
g) Type of fan/size/make
h) kW
i) Type of starter

C. Cooling coil

a) Coil fin materials
b) Tube dia (mm) and thickness
c) Fin size (mm)
d) No. of fins per inch
e) Outside coil surface (m^2)
f) Face area (m^2)
g) Row deep
h) ADP (deg C)
i) Bypass factor
j) Selected air velocity across coil (m/sec)
k) Make of cooling coil
l) Water through coil in m^3/hr.
m) Water velocity through coil in m/sec.
n) Water coil pressure drop in kg/cm^2
o) Water temperature in/out in degree C.

D. Filter section Pre filter

a) Type & make
b) Gross filter area (m^2)
c) Velocity through filter (m/sec)
d) Pressure drop through filter when dirty & when clean (mmWC)
e) Efficiency with micron size
f) Filter box construction details

© 2022 MECON Limited All rights reserved

g) Overall dimensions & No. of filters
h) Fixing frame details
i) Recommended methods of cleaning

© 2022 MECON Limited All rights reserved

6.0 ES2 – AIR WASHER UNIT

01. General

This specification outlines the minimum requirement for design, engineering, selection, manufacture, test and supply of Air Washer Unit with all accessories required to be installed for HVAC application to achieve desired performance in all respects. Specific technical requirement of Air Washer Unit if any, shall be mentioned in the job specification/data sheet as furnished along with the Technical Specification.

Brief description of Air Washer Unit is given below under clause No. 02. The point wise list of data to be furnished by the tenderer along with the offer is mentioned below under clause No. 03.

02 Description

Air washer unit comprises of intermediate chambers at inlet and outlet and cell deck pad chamber with water tank. Adapter section shall be provided for connecting air washer unit with other equipment. Description of these items are given below:

The evaporative cooler shall be a self contained, single skin housing unit consisting of MS intake louver of 75 mm deep with bird mesh, dry filter section , wet section and fan section . The dry filter are 6 ply HDPE as specified . The wet section shall consist of cooling media, water delivery system and sump including piping. The fan section shall consist of fan with motor, drive arrangement to deliver specified air volume against specified static pressure.

Housing

The housing shall be constructed from 16G GSS whereas the tank shall be of SS304. Hinged access panel shall be provided in the fan section of the housing on both sides. The access panel shall be gasketed or formed to preclude air or water leakage into the interior of the housing. The opening shall provide easy access to the blower to allow for service of the motor, belt adjustment, bearing and possible shaft replacement. The housing shall be airtight and waterproof.

The wet section shall consist of a sump, sides and top. A side lift – off or hinged panel for media access and service of the float valve assembly for make up water shall be provided. Removal and replacement of the media can be made through either a side lift off panel, top removal, intake or discharge side of the section as the case may be . The wet section shall be mechanically attached through the frame work to the fan section housing and shall be supported across it’s entire width.

Internal components of the wet section shall be cooling media, water delivery system, internal plumbing including a header pipe, make –up water, overflow and drain fittings.

© 2022 MECON Limited All rights reserved

Fan Section

The fan shall be heavy duty centrifugal type, DIDW backward curved impeller blades with non- overloading characteristics and shall be capable of delivering air volume at external static pressure as per requirement. The fan shall be AMCA certified for performance, noise level with balancing grade of **G6.3**. The fan shall have solid, ground and polished **C45** steel shaft with self-aligning type bearing on both ends.
Vibration isolation shall be provided under the fan and motor and shall be of spring type. Isolators shall be selected for minimum deflection. Flexible neoprene rubberized steel impregnated connection shall be provided between the fan discharge and the housing at the outlet duct connection.

Wet Section

Sump construction in wet section shall include TIG (fusion) welded corners and joints. The sump shall be leak proof without the use of fillers, sealants or coatings. A media support channel shall be included. This channel shall extend across the full width of the media. The channel shall provide a minimum of 50% open area for water to flow freely from the media into the sump.

An air bypass inhibitor plate shall be provided from the intake bottom of the media and designed to preclude any untreated air flow under the media.

Stainless steel couplers with female pipe thread shall be welded into the sump and side to provide for make-up water, overflow and drain. Make up, overflow and drain connection of suitable size shall be provided.

Water distribution system shall be pump re- circulating system with mechanical float valve assembly to maintain water level in the sump. A bleed – off system shall be provided. Bleed- off rate shall be minimum of 20% of evaporation rate. Pump shall be sized to deliver water flow rate at the head and pressure required. Flow rate shall be determined at three (3) times the evaporation rate plus the bleed-off rate. Pump shall be vertical submersible type of SS construction. One working plus one standby pump shall be provided for each air washer.

Water distribution system shall incorporate perforated SS deflector trough to redirect the water from the header pipe discharging upwards back on to the media to attain even distribution across the full width of the media. A union shall be provided in the riser pipe below the header pipe to facilitate removal of the header pipe.

Cooling media shall be celdek or glacier-cor or approved equivalent imported makes having rigid media12” thick . This media shall be cross- fluted pad of cellulose material impregnated with anti-rot slats and rigidifying saturants and wetting agents with at least 123 square feet of evaporative surface area per cubic foot of media. The transverse flutes shall be 60 degree and 30 degree with water flow in the direction of the 60 degree flute against the air flow and air flow in the direction of the 30 degree flute with the direction of air flow. Media shall have no more than 0.7” w.g. air pressure drop at 500 feet per minute face velocity and shall develop a saturation efficiency of not less than 95% for 12” thick media.

© 2022 MECON Limited All rights reserved

Media access and removal shall be accomplished through a removable side or top panel provided for this purpose or from the intake or discharge side of the media by removing retaining rails provided for media support and removal purposes as specified.

Dry Filters

A Dry filter stage will be provided to cover the entire intake face area of the cooling module. Filters are extended surface, pleated type , with 90% average dust arrestance efficiency, 2" thick cleanable type with maximum velocity of 500 FPM. Filters shall be removable from the intake side of the frame using bracketless lift and remove rack system or side removable from a hinged panel provided for this purpose.

Low water level pump protection

A low water level protection system with float type level switch shall be used to provide dry run protection for the pump.

Moisture drift eliminator

A moisture drift eliminator stage will be provided to prevent entrainment of water droplet in the air stream from the cooling media. The mist eliminator shall be made of HDPV

Magnehelic Gauge

Magnehelic differential pressure gauge shall be provided to measure the pressure drop across the cooling media to indicate the change in the resistance to air flow which relates to the cooling media condition. The detector tubing shall be placed immediately upstream and downstream of the media. Gauge shall be mounted externally on the unit for manual reading of the pressure drop.

03 Data to be furnished by the Tenderer along with offer

a) **Air washing chamber with water tank**

1. Make & Model No.
2. Overall dimensions (mm)
3. Weight (kg) with and without water
4. Air flow capacity in m^3/h & Air flow velocity in m/s
5. Total Pressure drop, kgf/ m^2
6. MOC, diameter and numbers of spray header pipes and nozzles
7. Make up water requirement
8. Details of make up, over flow, drainage, supply and return water pipe lines
9. Saturation efficiency
10. Amount of water and its pressure at the nozzle
11. Material of construction and thickness of casing, tank, air distributor plate
12. Water tank capacity
13. Details of mist /droplet eliminator : MOC, material thickness and

© 2022 MECON Limited All rights reserved

depth.

b) **Intermediate chamber**

1. Size, Material of construction & Thickness of material

c) **Adapter section**

1. Size, Material of construction & Thickness of material

d) **Re-circulating water system**

1. Pump capacity & head, motor KW
2. Details of piping, fittings, strainer, valves
3. Instruments – pressure gauge, temperature gauge, water flow switch

© 2022 MECON Limited All rights reserved

7.0 ES3 – BAG FILTER

01. General

This specification outlines the minimum requirement for design, engineering, selection, manufacture, test and supply/fabrication of Bag Filter with all accessories required to be installed for Dedusting System application to achieve desired performance in all respects. Specific technical requirement of Bag Filter System if any shall be mentioned in the job specification/data sheet as furnished along with the Technical Specification.

Brief description of Bag Filter System is given below under clause No. 02. The point wise list of data to be furnished by the tenderer along with the offer is mentioned below under clause No. 03.

02. Description

Constructional Features

The bag filter assembly shall generally consist of the following : -

- Module shell.
- Hopper for each module with RAVs/Screw conveyor with RAVs.
- Storage hopper with rack & pinion gate valves
- Housing and roof panels.
- Tube plate.
- Compressed air / Nitrogen distribution system
- Access doors.
- Filter bags and cages.
- Inlet and outlet manifolds.
- Inlet & outlet dampers (Pneumatic or as specified in job specification)
- PTFE laminated filter bags / Pleated cartridge bags (for very fine dust application like cast house dedusting, stock house dedusting, etc.)
- Nomex bags (for high temperature applications like lime kiln waste gas dedusting)

The bag filter shall have a plenum chamber, which distributes the incoming gas onto an array of fabric filter bags. Dust particles shall be entrapped on the filter fabric, cake lining the bag surface by straining, impingement, interception and electrostatic attraction. Rotary air lock valves shall be provided at the bottom of bag filter hopper for dust removal & air sealing. Manual slide gate shall be provided above each RAV to facilitate maintenance.

Normally bag filter casing thickness shall be 5 mm with sufficient stiffeners to withstand design static pressure inside Bag filter chamber. Thickness of hopper shall be minimum 6 mm.

The inlet air plenum for the fabric filter should feature a tapered feed duct in order to ensure uniform gas flow distribution to all cells.

© 2022 MECON Limited All rights reserved

Air entry to the cells should be directed uniformly by angles / deflection louvers to ensure complete bag usage within the cell. Cross horizontal flows shall not impinge on the bags in any area.

The bag fixing arrangement shall be such so as to enable easy and quick changing of bags.

Bags shall be hung as near as practicable to vertical so that the bags are not touching anywhere along their length. The Bag filter shall have antistatic Bags and spark proof design for the coke / coal and other explosive dust applications.

Particular attention shall be paid to the layout of the bags. A minimum distance of 75 mm between the bags and the closest metallic surface such as walls or columns of the casing shall be provided. The spacing between the bags shall be 50 mm (minimum). Relaxation in bag spacing may be allowed as per manufacturer's recommendation with proper justification.

A weathering shed shall be provided on the top of the bag filter with sufficient clearance to allow removal of bags for maintenance.

Required Air/cloth ratio

The contractor should design the pulse-jet fabric filter dust collector to operate under design flow conditions with a gas/air to cloth ratio as 1.25 $m^3/min/m^2$ unless otherwise specified in the project specification. However, the same can vary from 1.0 to 1.8 depending on fabric and dust material to be handled. In case of pleated cartridge bags, air to cloth ratio shall be around 0.8.

Bag Cleaning

The bag filters shall be of on line / off line cleaning pulse-jet type as specified in the job specification. Material of construction of bags shall be selected based on operating temperature, dust quality, quantity, composition and air quality. The cleaning of bags shall be carried out in a predetermined cycle by high-pressure pulse of dry compressed air or nitrogen by automatic operation of solenoid valve with timer.

A differential pressure measurement system shall be provided across the bag house. As the dust collects over the bags, the pressure drop shall be sensed by this system. As this drop exceeds a preset value the differential pressure measurement system shall send a pulse to start the bag cleaning operation.

Compressed air / Nitrogen shall be the cleaning medium and this shall enter the bags in short surges thus inflating the bags. The dust shall collect in the hoppers provided and shall be transferred by RAVs / conveyors to holding hopper. In general centralized Compressed air network with air drier shall be provided to ensure supply of dirt and moisture free compressed air for bag cleaning. Alternatively, surplus Nitrogen if available, may be provided on case to case basis.

© 2022 MECON Limited All rights reserved

The successful tenderer shall supply compressor along with drive and accessories safety valve, pressure gauge, air filter cum moisture separator unless otherwise specified in the job specification.

The differential pressure across each module of bag filter shall not exceed 150 mmWC and the bags shall be selected accordingly depending on the particle size of dust handled. In case of pleated cartridge bags, the differential pressure across each module shall not exceed 120 mmWC.

Dust hopper/ Holding hopper

A dust storage hopper for each fabric filter module shall be provided. A inverted pyramidal hopper with 65° valley angles shall be installed to collect the settled dust. Each of the bag filter hoppers and storage silos shall be provided with 2 motorized bin vibrators. For hot gas cleaning system hopper heater with thermal insulation shall be provided to reduce chance of condensation in hopper. Normally storage hopper thickness shall be 8 mm unless defined in the TS . 4.5m clear height shall be provided below pug mill / telescopic chute to facilitate truck entry to collect dust

Platforms and access stair case

The minimum platform width shall be 1.2 meters. The platforms shall be located at the top of hoppers, at the top of the bag filter unit and at the different levels required for maintenance and operation of the equipment and dampers. A safe guard rail should be provided on the platforms. Providing stairways and railing shall provide safe and easy access to the platforms. Intermediate platforms shall be provided for the bag filters. Following minimum structural members shall be considered.

Hand rail	:	25 NB, IS:1239-1990
Post	:	32 NB, IS:1239-1990
Access grating	:	40 depth, 6 thick,
Stair	:	40 C/C, 38° slope

Electrics & Instrumentation for Bag Filter System

The Electrics & Instrumentation for bag filters will consist of control panel, pressure switch cum indicator in the compressed air line, differential pressure switches, solenoid valves, and all other associated equipment. The brief specification of the major components will be as given below :

Control panel for Bag filter

The control panel will be free standing, floor mounting, fabricated from 2.0 mm thick CRCA sheet steel on a base channel of ISMC - 75), provided with cable gland plates, having synthetic rubber gasketting, provided with double door & canopy and enclosure conforming to IPW-55. The control panel will be factory assembled, wired with 1.1 kV grade PVC flexible wire of copper conductor (minimum size 2.5 sq.mm), factory painted. The control panel will be provided with following major equipment:

© 2022 MECON Limited All rights reserved

a) Incoming switch (minimum 32A, AC23 duty) with operating handle interlocked with the door, HRC fuses, contactors, MCBs in the various circuits.

b) Control transformer of required VA rating having +/-5 percent and +/- 2.5 percent tappings in the primary side of the control transformer with Isolating switches/MCBs in the primary & secondary sides.

c) 24V DC full wave power pack complete with filter and protective elements and also isolation cum short circuit protection both at AC and DC sides for power supply to solenoid valves.

d) Auxiliary contactor for control power supply monitoring, interlocking, and controls etc.

e) Auto-manual selector switches, push button switches, indication lamps, various monitoring devices, terminals (with 20 percent spare terminals) and other circuit elements required for control and monitoring.

f) Solid state Bag filter timer.

The bag filter timer will be a solid state device suitable for dusty, tropical and specified aggressive environment. The bag filter timer will be provided with internal semi-conductor fuse protection and will have provision for pulse frequency setting and pulse duration setting through independent operating knobs. The number of contacts in the timer will be equal to number of solenoid operated valves so that the timer will energize only one solenoid valve at a time and shall operate in sequence.

The Bag Filter Timer will provide timed sequential energisation of 24V DC operated solenoid valves of bag filters. LEDs for each solenoid energisation, power ON in PCB, feed back relay will be provided with potential free contacts which will close under following conditions :

i) Fault in the PCB.

ii) Open contact in the output side connected to individual solenoid valves. The contact will not close in the event of power failure to the controller.

iii) The sequential control (i.e. process) will start when the Differential Pressure (DP) switch is actuated at the first set point for normal operation. The process will continue till the pressure differential drops below the set value. When again the DP switch is actuated the process will continue from the previous position (i.e. next solenoid valve). However, when the power supply to sequential controller trips, the process will stop and sequential controller is reset to first load position enabling the process to start from the beginning.

iv) Apart from the DP mode operation defined above, the sequential timer shall also be capable of operating under pre-set timer mode irrespective of differential pressure.

© 2022 MECON Limited All rights reserved

v) Sufficient space will be provided for installation of bag filter panel with required front clearances for operation and maintenance including side and back clearances as required.

Differential Pressure Switch

i) The differential pressure switch will have two sets of independent micro-switches. The first set will be used for normal sequential cleaning operation of the bag filters as per lower set value of differential pressure. This set point will be independently adjustable.

ii) The second set of N.O. contact will close at upper set value of differential pressure representing clogged condition of bag filter and will be used for signaling and monitoring. This set point will also be independently adjustable. The contacts will be rated for 5 Amp, 240V AC.

iii) The DP switch will be suitable for outdoor installation. The DP switch casing will be made of pressure die cast Aluminum with enclosure conforming to IP-66.

iv) One number differential pressure switch with two set points will be provided across the Bag filter for initiation of bag cleaning operation and for signaling and monitoring of clogged condition.

v) Manometers shall be provided across each module and across the complete filter.

Solenoids

i) The solenoid coil will have encapsulated coil Class `F' insulated with a water proof (IP-65) plug-on connector. The coil will be suitable for 24V DC having + 10 % to -15 % voltage variations. The coil will be made of copper conductor.

Air Pressure Switch cum indicator

i) One number compressed air pressure switch cum indicator will be provided for each bag filter system in the incoming compressed air pipeline of the bag filter. The pressure range will match with the operating pressure. The switches will be snap action type with 1NO + 1NC contacts of 5A, 240 V AC. These contacts will be wired up to terminals in the bag filter control panel. The enclosure of the air pressure switch will be pressure die cast aluminum conforming to IP-65.

General Electrical Logic and Operating Principle of Bag Filter System

A. Mainly the differential pressure will govern the Dedusting Bag Filter system across the Dedusting Modules.

The total electrical logic will be controlled by the Devices like Differential Pressure Switch (DPS), solid-state sequential multi channel timer, solid-state master card, solenoid operated Diaphragm valves, inlet compressed air line pressure switch (P.S.) etc. DPS will be connected across the clean and dirty Air Chamber of the Bag Filter Module to measure the Pressure Differential. As the Filtration process commences, there is a gradual build up of dust on the Filter Bags which generates Differential

© 2022 MECON Limited All rights reserved

Pressure. When this Differential Pressure attains a pre-set value based on inlet dust concentration, type of dust and its particle size distribution, the differential pressure switch will get energized and send signal to the master card located in the control panel.

The master card will actuate the timer whose channels are connected with solenoid valves mounted on the compressed air header-Air Manifold Tank. Through the timer, the solenoid coil gets magnetized and makes an opening for the compressed air to flow from air manifold tank to pulse header pipe.

The pulse duration time will be adjustable. During this time the solenoid coil will remain energised allowing pulse air to flow. Energisation of next solenoid will take place in sequence one after the other. The time gap between the two-solenoid energisation will also be adjustable.

The process continues till the pressure differential drops below the set value. The D.P. Switch then gets de-energised which in turn cuts off the timer resulting in de-energisation of solenoid valves. The process will repeat again from the next solenoid valve based on the pressure differential switch and signal from the master card.

A pressure switch mounted on the compressed air line will sense the available pressure and dedusting system/ centrifugal fan will be switched off in case the available pressure falls below the specified pressure in compressed air line.

B. Following sequential steps of operation will be followed before actually switching on the main technological equipment to be dedusted:

1) Screw conveyor drives along with rotary air lock drive will be started first.

2) a) Setting differential pressure in differential pressure switch at the initial time of commissioning and for re-commissioning after long gap with clean Filter bags.

b) Power to timer to be switched ON

3) Fan motor to be started in the inlet Damper closed condition. After appropriate time delay, fan inlet damper to be opened.

03. Data to be furnished by the Tenderer along with offer

Bag filter

1. Make, type and quantity
2. Model No.
3. Type of bag filter
4. Capacity in m^3/hr
5. Filtering area in m^2

© 2022 MECON Limited All rights reserved

6. Fabric type
7. No. of bags
8. Diameter & length of bags in mm
9. Filtering velocity m/sec.
10. Pressure drop in mm WC
11. Weight of bag filter in kg (without dust)
12. Weight of bag filter in kg (with dust)
13. Efficiency of bag filter Vs particle size
14. Material / thickness of bag filter casing in mm.
15. Material / thickness of bag filter hopper in mm.
16. Compressed air requirement m^3/hr.
17. Compressed air pressure
18. Compressed air quality
19. Velocity of air at inlet / outlet in m/sec.
20. Fixing arrangement of filter bags
21. Space requirement (L x B x H)
22. Rotary Air Lock Valve details
    a) Quantity
    b) Capacity in m^3/hr (at 50% filling)
    c) Speed in rpm
    d) Motor rating kW & Pole.
23. Storage Hopper
    f) Volume in m3
    g) Type
    h) Size (L x B x H)
    i) Motor rating kW & Pole of rack & pinion type discharge gate.
    j) Material / thickness of hopper

24. Support / Structure / Weathering shed for bag filter

© 2022 MECON Limited All rights reserved

8.0 ES4 – CENTRIFUGAL FAN

01. General

This specification outlines the minimum requirement for design, engineering, selection, manufacture, test and supply of different type of Centrifugal Fan required to be installed for HVAC, Dust Extraction, Combustion System process application with all accessories to achieve desired performance. Specific technical requirement of Centrifugal Fan if any shall be mentioned in the job specification/data sheet as furnished along with the Technical Specification.

Brief description of different type of Centrifugal Fan is given below under clause No. 02. The point wise list of data to be furnished by the tenderer along with the offer is mentioned below under clause No. 03.

02. Description

Generally the fans shall be of limit load design. Centrifugal Fan design shall conform to IS 4894: 1987 (RA 1999). The fan shall be provided with drive motor, drive coupling/V-belt, belt pulley, belt guard, fan inlet and outlet flexible connections, Guide plate (to prevent direct contact of flexible fabric with air flow), variable inlet vane (VIV) damper, slide rails, foundation plates, gaskets, base frame, vibration isolators, Anchor / foundation bolts and nuts, fan inlet protection screen and other standard accessories unless otherwise specified in the job specifications. In case standby fans or multiple working fans are connected to the same duct line, fan outlet dampers shall also be provided in addition to VIVs. Further, all fan inlet and outlet dampers shall be motorized or pneumatically operated in case of dedusting, process and hot applications. All these items/materials and accessories shall be supplied with the fan.

The fan shall be of rugged steel construction, industrial duty type and suitable for the proposed project/plant. Capacity and static pressure of fan shall be as per job specification requirement. Fan housing shall be of welded construction and provided with flanges at inlet and outlet sides for duct connections. The housing shall be provided with lifting eye for ease of handling and bolted type access door. The equipment shall be designed to permit ease of access during inspection, maintenance and repair.

The fan unit shall be free from undue noise and vibration during operation; normally the fan speed shall not be more than 1500 RPM, preferably less than 1000 RPM.

The fan shall be both statically and dynamically balanced as per ISO:1940. In general HVAC system application balancing grade shall be of 6.3 and for process application balancing grade shall be of 2.5

Casing & Impeller

Casing and inlet box shall be fabricated from mild steel (IS 2062: 2006) plate with continuous welded joints and external stiffening to prevent vibration. Flanged,

© 2022 MECON Limited All rights reserved

bolted and gasketed access doors are to be provided in the equipment scroll and inlet box. The casing and inlet box of each equipment / fan shall be split with bolted flange joints to allow for removal of the impeller and shaft without removal of installed connecting ductwork.

Shaft seals shall be provided at the casing and the inlet box. The housing shall be fitted with a bottom drain, not less than 50 mm dia. The equipment units and drive motors shall be assembled on a common structural steel base plate wherever practical, to ensure mounting rigidity.

Fan inlet / outlet velocity shall be limited to 15 – 22 m/s.

The fan impeller may be backward curved for clean air application and backward curved radial tipped for dedusting applications unless otherwise specified in the job specification. The impeller shall be of welded steel, designed for heavy duty and having non-overloading (limit-load) power characteristics. The first critical speed of the rotating assembly shall be at least 25% above the operating speed.

Fans for ventilation systems shall have following minimum thickness of materials for different parts unless otherwise specified in job specification

a) Capacity below 20,000 m^3/hr :

Casing	:	3.15 mm
Back plate	:	4 mm
Impeller	:	2.5 mm

b) Capacity above 20,000 m^3/hr and below 50,000 m^3/hr

Casing	:	4 mm
Back plate	:	6 mm
Impeller	:	3.15 mm

c) Capacity above 50,000 m^3/hr

Casing	:	6 mm
Back plate	:	8 mm
Impeller	:	6 mm

For dedusting and process applications, thickness and material of construction will be defined in the job specification depending upon specific.

Shaft

Shaft shall be steel bar stock or forging made of material conforming to EN 8 and machined all over. The shaft with equipment impeller and half coupling mounted is to be dynamically balanced.

Drive Coupling

The fan shall be directly driven. The drive coupling from the motor to fan shaft is

© 2022 MECON Limited All rights reserved

to be of flexible type suited for heavy duty and industrial application. A protective guard is to be fitted over exposed drive shafts and coupling. Belt drive may be allowed only in case of ventilation fans on specific approval of purchaser / consultant.

Bearings

The bearings are to be outside of the equipment casing and inlet box shaft seals and shall be of heavy duty, self aligning, anti-friction, sump oil / grease lubricated type with readily accessible lubrication points. Adequate temperature protection shall be provided for the bearings in order to avoid running the unit without lubrication. Bearings shall be selected with ample safety factor for longer life.

Bearing housings are to be split horizontally, fitted with multiple seals to exclude dust while retaining lubricant and shall have provision for mounting temperature and vibration sensors.

Guards

For all external rotating parts like coupling, belts, pulley etc., guards fabricated out of sheet metal shall be provided.

Base Frame

Fabricated steel bracket of M.S. angles, channels and chequered plates shall be provided to take static and dynamic load of the fan and motor assembly. The base frame shall be fabricated of mild steel and shall support equipment housing, bearing pedestals, coupling guards and drive motor where ever practical. All support mounting faces are to be machined after all welding is completed. Jacking screws are to be provided wherever necessary, to allow both lateral and longitudinal movement of equipment.

Noise Emission

The noise level of fan shall not exceed 85dB(A) at a distance of 1 m when running at full load.

Vibration Standard

The fans and duct work shall be designed for minimum vibration. Maximum allowable vibration level shall be as per VDI – 2056 guide lines. Sufficient number of suitable vibration isolators of approved make shall be provided to ensure isolation of vibration from the equipment to foundation as per requirement.

Vibration and Temperature Sensors

For all dedusting and process applications, two (2) vibration sensors and two (2) temperature sensors (RTD) shall be provided for each fan and eight (8) temperature sensors (RTD) shall be provided for each motor.

03. Data to be furnished by the Tenderer along with offer:-

© 2022 MECON Limited All rights reserved

a) CENTRIFUGAL FAN

1. Make & Model No.
2. Quantity, no.
3. Type of blade
4. Capacity, m^3/h
5. Static pressure and total pressure, mm WC
6. Operating speed, RPM
7. Critical speed, RPM
8. Shaft power, kW
9. Total Efficiency, %
10. Motor rating, kW / pole
11. Fan Characteristic Curves
12. Impeller Diameter in mm
13. Impeller weight in kg.
14. GD^2 value
15. Velocity at inlet & outlet of fan, m/sec
16. Static weight & dynamic weight of fan and motor, kg
17. Coupling details/V-belt details
18. Vibration level
19. Vibration isolator type & quantity.
20. Outlet damper size
21. Material of construction & thickness of scroll, blade, shroud, back plate, shaft diameter in mm
22. Noise level at 1m distance in dB(A)
23. Bearing details
24. Acoustic lagging / silencer, if included :
    i) Material of construction
    ii) Insertion loss
25. Overall size
26. Drive Motor rating suggested
27. Special constructional feature, if any

a) **FAN DRIVE MOTOR DETAILS**

1. Type & make
2. Voltage, phase & frequency
3. Rated power, kW
4. Speed, RPM
5. Starting/ pull out torque
6. Starter details
7. Line current
8. Starting current
9. Overall efficiency
10. Class of insulation
11. Type of enclosure
12. Any other information

b) **VIV Damper**

1. Make, model and type

© 2022 MECON Limited All rights reserved

2. Diameter of VIV
3. Type of actuator
4. Motor kW/pole
5. Material of construction and thickness

© 2022 MECON Limited All rights reserved

9.0 ES5 – CENTRIFUGAL PUMP

01. General

This specification outlines the minimum requirement for design, engineering, selection, manufacture, testing and supply / fabrication of Pumps with all accessories required to be installed to achieve desired performance in all respects. Specific technical requirement of Pumps if any shall be mentioned in the job specification / data sheet as furnished along with the Technical Specification.

Brief description of Pumps is given below under clause No. 02. The point wise list of data to be furnished by the tenderer along with the offer is mentioned under clause No. 03.

02. Pumps

The pumps shall be designed, manufactured and tested as per following applicable IS standards:

IS 5120: 1977 (RA 2001)	Technical requirements for rotodynamic special purpose pumps
IS 9137:1978 (RA 2002)	Code for acceptance test for centrifugal, mixed flow and axial pumps - Class C
IS 6595: Part 2: 1993 (RA 2002)	Horizontal centrifugal pumps for clear, cold water: Part 2 General purposes other than agricultural and rural water supply - Specification

In case any other international standards are used, the same shall be subject to approval of the Purchaser and the pumps shall be suitable for the duty conditions and capacities as indicated in the job specifications.

The centrifugal pumps along with their auxiliary equipment shall be suitable for the required duty conditions and shall be designed and manufactured for continuous duty at full load.

All the pumps shall be capable of developing the required total head at rated capacity for continuous operation. The pumps shall operate satisfactorily at any point on the H-Q characteristic curve over a range of 50% to 130% capacity or capacity corresponding to 75% of the total head whichever is lower.

Capacity vs discharge pressure curve for each pump shall preferably be continuously drooping from the shut-off point to the rated operation point and be suitable for parallel operation. The pumps shall be designed to avoid cavitation at any of the operating points.

The required duty range for a pump shall be on stable portion of its head-capacity curve close to the best efficiency point. The head developed at the best efficiency point shall be close to the required differential pressure so that throttling is not required at pump discharge.

© 2022 MECON Limited All rights reserved

The equipment and auxiliaries shall be designed for quick and economical maintenance. The equipment shall be easily dismantleable without disturbing the suction and delivery pipe connections.
The equipment design shall incorporate provisions for reduction in noise level.

The rotating elements of the pumps shall be checked for critical speed in bending as well as torsion. The critical speeds shall be at least 30% above the normal speeds for units with flexible shafts and at least 20% above the maximum operating speed in case of stiff shafts.

All passages inside the pump casing and impellers, which may be inaccessible to machining, shall be ground to a smooth finish as far as practicable.

All pumps preferably shall be horizontally split / end suction type with maximum RPM of 1,500. However, mono-block type pump may be provided only in case of small pumps of capacity less than 15 m^3/h for air washer applications. Multistage pumps shall be provided for low flow high head applications like dust suppression.

Material of construction

Casing	- C.I
Impeller	- Bronze
Bearing Bracket	- C.I
Shaft protection sleeve	- Bronze
Wearing ring	- Bronze
Shaft	- EN8
Common base frame for pump & motor	- M.S

The direction of rotation shall be clearly marked either by incorporating it on the casing or by an arrow on a separate metal plate securely fitted to the casing.

A stainless steel name plate of 2 mm thickness shall be provided and securely attached by stainless steel pins at an easily accessible point on the pump. The plate shall be stamped with the following minimum information :-

a) DESIGN CAPACITY
b) TOTAL HEAD
c) SPEED
d) MOTOR RATING
e) MODEL NUMBER
f) MANUFACTURER'S SERIAL NUMBER
g) WEIGHT OF EQUIPMENT
h) TAG NUMBER

The total head-capacity curve shall be continuously rising towards the shut-off. The shut-off head shall be at least 110% of the total head.

The required NPSH at duty point shall be at least 1.0 m lesser than the available NPSH .

© 2022 MECON Limited All rights reserved

The velocity of vibration shall be within 4.5 mm/sec.

The power rating of the pump motor shall be larger of the following

a) 110% of the power required at the duty point.

b) For parallel operation, motor rating should be sufficient enough for running of single pump also.

The common base frame for pump and motor shall be in one piece with suitable holes for grouting. Adequate space shall be provided between pump drain connections and base plate for installation of minimum 15mm drain piping. Pumps shall be supplied with suitable drain pans or drain rim type base plates with valved drain connections.

Coupling guard, made of expanded metal and bolted to the base plate shall be supplied for all pumps.

Pumps will be supplied with flexible coupling. Back-pull out type pump shall be provided with spacer type coupling.

Standard hydrostatic test shall be conducted on the pump casing with water at 1.5 times the maximum discharge head or twice the rated discharge head whichever is higher. The hydrostatic tests on the casing shall be conducted for a minimum duration of 30 minutes.

Casing

The casing shall be of cast iron and shall be designed for a pressure not less than the shut-off pressure at the highest operating speed plus the maximum pressure that may be encountered at the pump inlet. In addition, CI casing shall have corrosion allowance of not lower than 3 mm.

Impellers

Impeller shall be of bronze. Impellers and balancing drums (if provided) shall be statically and dynamically balanced. Dynamic balancing shall be at the operating speed of the pump. For multi stage pumps, all the impellers shall be assembled together for balancing. Provision shall be made for adjusting the clearance between the impeller and the casing to compensate for wear. The impeller shall be keyed or screwed on to the shaft in such a way that it does not come-out due to reverse rotation of the pump.

Shaft

The shaft shall be of EN-8 or equivalent and shall be designed for critical speed. The ratio of critical speed to speed of shaft shall be not less than 1.3 for solid shafts.

The deflection in line shaft shall not exceed 1 mm per meter of length. All shafts above 150 mm diameter shall be ultrasonically tested. Shafts shall be checked for endurance and strength. Change of sections in shafts if considered shall be made

© 2022 MECON Limited All rights reserved

with due allowance for stress concentration. Shafts shall be machined to close tolerance for mounting on impeller bearings, shaft seal, shaft sleeve, shaft coupling etc. The magnitude of shaft deflection at the face of the shaft seal shall not exceed 50 microns.

Coupling and coupling guard

Horizontal pump sets shall be provided with flexible couplings of pin and bush type and shall be constructed of metallic materials except for bush which shall be of rubber materials. Coupling shall be properly keyed in place and the cylindrical fit shall allow simple removal of the coupling in the field. Spacer type couplings shall be provided for end suction pumps.

Removable coupling guards shall be supplied and mounted. Guards shall be sufficiently heavy and rigid to provide adequate safety for working personnel.

Shaft sealing

Shaft seals shall be provided to prevent leakage out of, or into, a pump over the range of specified operating conditions. The seals shall be suitable for variations in inlet conditions that may prevail during start-up and shut down. They shall be accessible for inspection and replacement without disturbing any part of the installation.

Bearing

Two bearing assemblies shall be provided, one within the frame to carry radial load only and the other to carry both radial and axial thrust. Bearings shall be of manufacturer's standard design, antifriction type, oil / grease lubricated. Suitable thrust bearings shall be provided in the pump to take total thrust of the pump including hydraulic thrust. Thrust bearings shall be of oil lubricated type with suitable cooling arrangement. Motor thrust bearing shall be designed without water cooling arrangement. Suitable tapped holes shall be provided for refilling of oil in the bearing housing.

All the vertical pumps shall be provided with separate thrust bearings with proper lubrication and cooling facilities as required so that the thrust and other vertical loads due to the moving parts are not transferred to the prime mover.

Base plate

All horizontal pumps shall be supplied with sturdy base plates as per manufacturer's standard, common to pump and drive. Base plates and pump supports shall be constructed so rigidly and the unit so mounted as to minimize misalignment due to piping strain, internal differential thermal expansion, etc. Base plates shall be fabricated from MS channels.

Companion flanges, bolts, nuts & gaskets

Plate flanges having raised face shall be provided at suction and delivery side of pumps and they shall be of mild steel and conform to table 17 of IS: 6392-1971

© 2022 MECON Limited All rights reserved

(R.A.1988). Slip on raised face flanges to 150 Lbs. class conforming to ANSI B16.5 shall also be acceptable.

Black bolts and nuts conforming to IS 1362-1992 shall be provided for the companion flanges.

CAF gaskets of 1.5 mm thickness conforming to IS: 2712-1979 (R.A. 1994) shall be provided for the companion flanges.

03. Data to be furnished by the Tenderer along with offer :-

1. Make and model no.
2. Type of pump
3. Capacity in m3/hr.
4. Total head in m WC
5. Quantity
6. Material of Construction of Shaft, Impeller and Casing
7. Pump speed (rpm)
8. Shaft power
9. Drive details – Motor make, kW, Class of insulation and Frame size
10. Bearing type & make
11. Type of coupling
12. Vibration level
13. Noise level at 1 m distance
14. Duty
15. Weight of pump & motor separately
16. Characteristic curves for pumps
17. Type of liquid to **be handled**

© 2022 MECON Limited All rights reserved

10.0 ES6 – VAPOUR ABSORPTION M/C (VAM) BASED CHILLER PLANT

01. General

This specification outlines the minimum requirement for design, engineering, selection, manufacture, test and supply of Vapour Absorption Machine (VAM) based Chilled Water Plant with all accessories required to be installed for HVAC and process cooling purpose to achieve desired performance. Specific technical requirement of VAM if any, shall be mentioned in the job specification/data sheet as furnished along with the Technical Specification.

Brief description of VAM is given below under clause No. 02. The point wise list of data to be furnished by the tenderer along with offer is mentioned below under clause No. 03.

02. Description

VAM shall be completely factory assembled and wired in a single package complete with evaporator, absorber, two stage generator, condenser, heat exchangers, solution pump, refrigerant pump, vacuum pump for purging, starter panel (starting control), micro processor control panel (safety & operating controls), all necessary sensors/ instruments, internal cabling and piping work.

VAM shall be supplied with full operating charge of refrigerant (water), lithium bromide solution (with non toxic inhibitor) and octyl alcohol for purging. Lithium Bromide and Octyl Alcohol shall also be supplied for for one year consumption. The machine shall be factory tested under operating conditions.

The absorption machine shall be horizontal shell and tube with unit shell which shall be horizontally divided into two parts. The upper part of VAM shall contain the condenser and the low temperature generator. The evaporator and the absorber shall be housed in the lower part. The high temperature generator shall be provided either on the side of the machine or at the top depending upon the type of the machine. The heat exchangers shall be horizontal shell and tube type and fitted beneath the unit shell.

Material of construction of different components of the vapour absorption machine shall be as follows.

- Shell & Tube sheet: MS (IS 2062)
- Tubes - evaporator; absorber; condenser: high quality seamless grade Cu (70%) -Ni (30%) or SS 316 L
- Tubes - low temperature generator: Copper or Stainless Steel
- Tubes in high temperature generator: Stainless Steel
- HTG Tube sheet: SS316 L
- Impeller for Refrigerant & Solution Pumps: Stainless Steel
- Casing for pump: CS

© 2022 MECON Limited All rights reserved

The vapour absorption units shall be complete with the following units and features

- Hot well pumps (1w +1s)
- Cold well pumps (1w +1s)
- Condenser water pumps (1w+1s)
- Induced draft counter / cross flow FRP cooling tower with FRP / RCC basin & PVC fills. Cooling tower basin shall be at higher elevation than the condenser water pump.
- Chilled water/ condenser water piping.
- Valves/ strainers etc in pipe lines.
- RCC hot well tank & cold well tank and insulation of tanks.
- Captive Soft water plant for treating make up water.
- Evaporator with finned tubes.
- The evaporator portion and support structure should be painted with chloro-rubber paint
- Absorber
- High Temperature Generator with 'U' tube configuration for better thermal expansion arrangement having.
- Unless otherwise specified in the job specifications, the VAM shall be double effect steam fired type with HTG having SS straight tubes.
- Low Temperature Generator
- High temperature and low temperature heat exchanger for improving cycle efficiency.
- Sight glasses shall be fused type.
- Drain cooler to effectively cool steam condensate & improve energy efficiency.
- Solution & Refrigerant pump with necessary isolation valves.
- Vacuum pump with motor and complete assembly
- All necessary electrics, controls and instrumentation
- PLC based control panel.
- Pneumatically operated steam control valve complete with air set, regulator, valve positioner, I/P converter, solenoid valve on air line complete in all respects.
- Compressed air lines shall be provided by the Contractor as required for AC system. The compressed air line shall be drawn from the existing header.
- Imported high quality floats/relays for HTG & evaporator levels.
- First charge of Lithium Bromide with inhibitors and for one-year consumption.
- First charge of refrigerant (water)
- First charge of Octyl Alcohol and for one-year consumption.
- The unit will be complete with all necessary valves, mountings, instruments, thermometers, etc. for normal and satisfactory operation.

© 2022 MECON Limited All rights reserved

- All pressure and temperature gauges should be glycerin filled with shatter proof glass and isolation valves for maintenance, calibration and replacement
- The unit will also be complete with necessary MS pipes, pipe fittings, valves, interconnecting pipes, internal piping, etc. as per requirement.
- Insulation of chilled water pipelines, steam / water pipelines, valves, fittings, etc.
- Painting.
- All necessary safety & control switches shall be provided for normal and satisfactory operation of chiller unit.
- MCC, starter panel, electrics, instrumentation etc.
- The steam system shall have Auto PRDS System comprising of pressure reducing & de-superheating station with metering pumps.
- Necessary interconnection of the vapour absorption units shall be provided for flexibility of operation.
- The vapour absorption machine shall be designed in such a manner to avoid crystallization. In the rare chances of crystallization, the machine shall have de-crystallization protection and auto de-crystallization operation control.
- Steam piping (from battery limit onwards) along with all necessary valves (shut off valve, flow control valve etc.), instruments & safety devices. IBR approval shall be in the scope of Contractor.
- Steam pressure & temperature control system.
- Steam condensate disposal arrangement. Steam condensate line shall be of SS

Following safety and controls will be provided with the vapour absorption machines:

- Motor overload relay for solution, refrigerant and purge pump
- Motor coil temperature cutout for solution and refrigerant pump
- Low refrigerant temperature cutout
- Chilled water flow failure cutout
- First stage generator pressure cutout switch
- First stage generator solution temperature cutout
- Automatic start/stop temperature cutout
- Solution dilution control
- Decrystalization operation control
- Solution pump start condition switch
- Automatic start / stop arrangement

Automatic capacity control system consisting of steam control valve and automatic temperature controller, to control the refrigerating capacity in accordance with the load requirement. Capacity control should be smooth, stable and step-less from 100% to 20% load.

© 2022 MECON Limited All rights reserved

The Contractor shall furnish complete details of electrics, control and instrumentation system.

Mandatory spares for 2 years, including spares part list shall be provided by the Contractor.

Necessary instruction manual, P&I diagram, control panel drawing, GA drawing and foundation drawing shall be furnished.
The steam flow control valve should be installed at a maximum height of 1m from the floor.

The VAM shall be designed in such a manner to avoid crystallization. In the rare chances of crystallization, the machine shall be provided with de-crystallization protection and auto de-crystallization operation control.

Automatic control of chilled water outlet temperature shall be provided by controlling steam flow rate.

VAM shall have connectivity for communication, data logging, history charts, mimics to PC at remote location.

Solution & refrigerant pump drive shall be hermetically sealed.

Insulation of VAM unit shall be provided.

Fouling factor for condenser & evaporator shall be 0.001 & 0.0005 hr-ft² °F/ Btu respectively.

Specific technical requirement about type of waste heat energy for the operation of VAM machines if any shall be mentioned in the job specification/data sheet as furnished along with the Technical Specification. Vapour absorption m/c shall be chosen to operate normally with Saturated steam in the pressure range 0.5 to 10 kg/cm2 g. However, in specific cases operation with Hot Water in the temperature range 90 -135°C may be provided.

Vapour absorption m/c shall be chosen not only to meet the full load design, but also to perform efficiently at lower loads and at lower condenser water inlet temperature (particularly during winter season). Necessary condenser water temperature control shall be provided. Tenderer shall furnish the inlet condenser water temperature range of their machine.

Evaporator heat exchanger design shall meet the chilled water inlet & outlet temperature required for air conditioning requirement or for process cooling requirement as mentioned in the job specification.

In case of multiple units, necessary interconnection of the vapour absorption units shall be provided for flexibility of operation.

© 2022 MECON Limited All rights reserved

03. Data to be furnished by the Tenderer along with offer :-

General

- Application
- No. of units (working + standby)
- AC plant capacity (TR)
- Refrigerant / Absorbent
- Type of VAM machine (single effect/double effect)
- Charge (Refrigerant & Absorbent) of all circuits (kg)

Design & construction features

General

- Make/Type
- Model No.
- Maximum power required (kW)
- Type of capacity regulation
- No. of steps of control
- Type of drive
- Range of load operation
- No. & type of heat exchangers

Material of construction

- Condenser tube
- Chiller tube
- Shell
- HT generator tube /tube sheet
- LTG tube
- Casing / Impeller for pump
- Bolts /Nuts
- Base frame

Auxiliaries

- High /Low pressure gauge (Yes / No)
- High /Low pressure switches (Yes / No)
- Water differential switch (Yes / No)
- RTD (Yes / No)
- Automatic unloading device (Yes / No)
- Solution pump (Yes / No)
- Refrigeration pump (Yes / No)
- Vacuum pump (Yes / No)
- Local control panel (Yes / No)

Performance

- Design hydraulic /pneumatic test pressure (kg/cm2)
- Condenser cooling water side fouling factor
- Water fouling factor for evaporator
- Water fouling factor for absorption

© 2022 MECON Limited All rights reserved

Driver motor details

Condenser

General
- Type /arrangement
- Manufacturer /model no.

Performance
- Fluid flow rate (m^3/hr)
- Inlet/outlet temp (Deg. C)
- Fluid velocity (m/s)
- Pressure drop (allowable / calculated)
- Fouling resistance

Construction
- Bundle /Nozzle orientation
- Design (Hydrostatic) test pressure and duration
- No. of passes
- Corrosion allowances
- Connection size (inlet / outlet)
- Thickness (Min/Average)
- Length of tubes

Material of construction and their codes
- Shell
- Tubes
- Tubes sheets

Auxiliaries
- Thermo wells
- Pressure gauge
- Vent connection with valve
- Drain connection with valve
- Relief valve / fusible plug

Absorber

General
- Type arrangement
- Manufacturer / model no.
- Performance / selection chart furnished

Auxiliaries
- Thermo wells
- Pressure gauge (manometer)
- Vent connection with valve
- Drain connection with valve
- Relief valve

© 2022 MECON Limited All rights reserved

- Anti freeze thermostat

Refrigerant piping, valves & fittings (Included / Not included)

Piping details

Valves (included / Not included)

Solenoid valves (Liquid line) - (Included / Not included)

Charging valve (included / Not included)

Sight glass (included / Not included)

All necessary supports for refrigerant piping provided (Yes / No)

Chiller data

- Chilled water inlet temp. (Deg. C)
- Chilled water outlet temp. (Deg. C)
- Chilled water flow (CMH)
- Steam pressure inlet to PRDS
- Steam pressure & temperature inlet to VAM
- Steam consumption

© 2022 MECON Limited All rights reserved

11.0 ES7 – VAPOUR COMPRESSION BASED CHILLER PLANT

01. General

This specification outlines the minimum requirement for design, engineering, selection, manufacture, test and supply of different types of Direct Expansion (DX) type / Chilled Water generator equipment with all accessories required to be installed for HVAC and process cooling purpose to achieve desired performance. Specific technical requirement of Direct Expansion (DX) type / Chilled water generator type equipment if any, shall be mentioned in the job specification/data sheet as furnished along with the Technical Specification.

Brief description of different type of Direct Expansion (DX) / Chilled Water generator Type Equipment is given below under clause No. 02. The point wise list of data to be furnished by the tenderer along with the offer is mentioned below under clause No. 03.

02. Description

The Vapour Compression based chilled water plant shall include

- Package type chiller unit comprising of water cooled condenser, hermetic/semi hermetic sealed reciprocating /screw / centrifugal compressor, refrigerant pipe line, instruments and controls. Chillers shall essentially be ARI certified.
- The chiller shall be supplied with full operating charge of refrigerant R-134a / R407c R123 / R22 & lubricating oil. Chiller performance shall be ARI certified as per ARI standard 550-92. Cooler (evaporator) shall be dry expansion type .
- Insulated chilled water piping network with valves (Shutoff, flow control, float, etc), strainers, instruments and fittings.
- Thermal insulation over condensate drain line to avoid condensation over cold surface
- Chilled water / cold well / hot well pumps
- Condenser water pumps
- RCC hot well tank & cold well tank and their Insulation.
- Thermally insulated expansion tanks located at the top most location of the entire chilled water piping network.
- Condenser cooling network comprising Induced draft counter / cross flow FRP cooling tower with FRP / RCC basin & PVC fills, pipes & fittings, valves (Shutoff, flow control, float, etc), strainers and instruments. Cooling tower basin shall be at higher elevation than the condenser water pump. Cooling tower shall be rated for 20% higher capacity than chilled water plant and shall be supplied with one standby cell.

© 2022 MECON Limited All rights reserved

- Multiple air handling units / Fan coil units as applicable, with fan, filter, cooling coil for different premises.
- Ducting network with damper, diffuser, acoustic and thermal insulation.
- Humidity control arrangement with strip heater, pan humidifier and humidistat.
- Make up air filter with damper in different AHU rooms.
- Temperature / Pressure gauges, Magnetic type flow meters in chilled & condenser water lines
- MCC, starter panel, electrics, instrumentation etc.

Chemically treated water shall be considered as make-up for condenser cooling system and also as make up to the chilled water system. Necessary water treatment / softening plant shall be considered by the successful tenderer.

Technical specification of equipment

The equipment will be normally as per brief description of main equipment given below unless otherwise specified in the job specifications:

Base Frame:

Water chilling package base frame structure will hold the following :

A. Semi Hermetic Reciprocating / Centrifugal / Screw refrigeration compressor
B. Condenser
C. DX water chiller
D. Associated refrigerant piping, fittings and controls.

Normally Water chilling package shall be of floor mounted two tier type.

Direct Expansion (DX) type frame structure will hold the following :

A. Semi Hermetic Reciprocating / Centrifugal / Screw refrigeration compressor
B. Condenser
C. Associated refrigerant piping, fittings and controls.

Resistoflex neoprene pads shall be used as vibration isolator between common base frame and floor and spring cup type vibration dampers shall be used between compressor and common base frame.

Refrigeration compressor

Refrigeration compressor shall be of multi cylinder semi-hermetic reciprocating / centrifugal / screw type. The compressor shall be driven by TEFC motor through V-belt drive / flexible coupling direct drive. Compressor design shall conform the

© 2022 MECON Limited All rights reserved

required safety measures as per IS-11461-1985, RA 2001 guide lines and testing of compressor shall confirm to IS-5111-1993 / ISO 917: 1989, RA 1999.
Compressor housing cylinder head shall be of fine grained cast iron. Valve plates shall be of cast iron or stainless (ring plate type). The piston shall be made from light metal alloys preferably Aluminum with one oil groove and two compressor rings. The connecting rod shall be of forged steel of Aluminum alloys with integral bearing surfaces on crank and piston pin ends. Crank shaft shall be of forged steel with drill for oil distribution. Crank shaft shall be statically and dynamically balanced to eliminate vibration. In case of shaft seal, the same shall be positive acting to prevent the leakage of refrigerant and infiltration of air during compressor operation and idle periods.

The main bearing shall be of self-alignment, horizontally split and lined with anti-friction bearing metal.

Compressor shall be lubricated by forced feed lubrication system comprising of reversible, positive displacement gear type oil pump, interconnecting pipes, filter cartridge, oil strainer, sight glass, oil drain valve. If required, oil coolers shall be provided. Oil safety switch shall be provided to stop the compressor in case of excessive or lower oil pressure.

The refrigerant compressor shall be equipped with built-in automatic unloaded starting arrangement.

Electrically operated crankcase heaters suitable for specified power supply system shall be provided. Heaters shall be automatically actuated when compressor is stopped.

The compressor shall have automatic capacity control in addition to manual capacity regulation. Capacity regulation shall permit the operation of the compressor at part load with reduced power consumption.

The following accessories and instrumentation shall be considered for the refrigerant compressor:

A. Large suction strainer, muffler.
B. Service stop valves for suction and discharge sides.
C. Pressure and temperature gauges for suction, discharge and lubricating oil.
D. Common base frame for compressor and motor including coupling.
E. Flexible coupling / V-belt drive.
F. Coupling belt guard.
G. Crank case heater.
H. Oil chargers and oil check valves.
I. Electric motor, drive set.

The following controls and safety devices shall be provided for the compressor:

A. Oil safety switch.
B. High and Low pressure cut outs
C. Relief by pass valves.
D. Spring loaded, built-in safety valves for each cylinder.

© 2022 MECON Limited All rights reserved

E. Indicating lamps and alarms.
F. Timer to set time interval between starting and loading the compressor.

Condenser

The condenser shall be of horizontal, shell and tube type construction with water flowing inside the tubes and the refrigerant gas condensing outside the tubes. Alternatively, as per job specification requirement air cooled type condenser may be provided. Condenser design shall confirm to IS-11327- 2007 guide lines.

The condenser shall be equipped with integral finned type, solid drawn, seamless copper tubes.

Multi-pass construction condenser shall be provided. It shall be designed for proper number of passes to give optimum water velocity, efficient heat transfer and allowable pressure drop.
The condenser tubes shall be rolled into the grooves of tube sheets at either end to ensure a perfect water and air tight joint.

Adequate baffling arrangement shall be used in the condenser for improved heat transfer.

Condenser tubes shall be adequately supported to prevent sagging and vibration failure.

The joints of water boxes and tube sheets shall be water tight while those of tube sheets and shell shall be air tight to prevent leakage of refrigerant and infiltration of moisture into the system.

The condenser shall be equipped with following accessories / safety devices :

A. Purge valve
B. Charging valve
C. Relief valve / fusible plug
D. Hot gas inlet / liquid outlet connections on the shell with flanges.
E. Water inlet / outlet connections with flanges.
F. Hand shut-off valve for water inlet and outlet to condenser and chiller.
G. Pressure & temperature gauges for water inlet & outlet/refrigerant gas inlet & outlet.
H. Vent valves etc.
I. Charging valve.

Chiller

The chiller will be of direct expansion, horizontal, shell and tube type construction with the refrigerant flowing inside the tubes and the water outside the tubes.

Chiller shall have MS fabricated shell, copper tubes with internal turbulators and MS tube sheet and MS fabricated or cast iron shell end boxes. The shell shall be designed for approximately 10 kg/cm².

© 2022 MECON Limited All rights reserved

The copper tubes shall be rolled into grooves on tube sheets for a water and airtight joint. Joints between the tube/sheets and the shell should be watertight while those between the shell and the boxes should be airtight. Adequate sealing gaskets should be used to prevent leakage of refrigerant and the infiltration of moisture and air into the system. The chiller shell shall have flanged water inlet and outlet connections welded as an integral part of it.

The chiller assembly shall be thermally insulated with polyurethane or equivalent material of adequate thickness and finished as described under 'Insulation'.

Chiller shall be equipped with the following controls/accessories/safety devices:

A. Refrigerant liquid inlet and gas outlet connections with flanges and liquid line shut-off valve
B. Liquid distributor with proper circulating arrangement
C. Thermostatic expansion valve
D. Solenoid valve on liquid inlet line
E. Cooling and anti-freeze thermostats
F. Water inlet/outlet connections with flanges and shut-off valves, along with counter flanges
G. Vent connections with valves
H. Pressure and temperature gauges for water inlet/outlet
I. Relief valve, purge valve, drain valve, shut-off valve,
J. DP switch across the chiller.

Interconnecting refrigerant piping, fittings and valves

Refrigerant piping is required to interconnect the compressor, condenser and the chiller into a closed network.

Expansion valves shall be pilot operated type. Solenoid valve shall be provided for 'Pump down' operation of the unit.

Moisture indicators, filter/drier unit shall also be provided in the liquid line with isolating valves.

Strainers shall be of brass, complete with bronze screen and permanent magnet strainers shall be installed up-stream of refrigerant solenoid valves, as per requirements. Strainers shall be provided with isolating valves and bypass valves.

Heavy duty seamless steel pipes shall be used for the piping network; while seamless solid drawn copper tubes shall be used for the refrigerant liquid line.

The piping network shall incorporate loops in the circuit to efficiently separate oil and liquid refrigerant from the gas and suction vapour respectively.

All horizontal lines shall be pitched to 12m for every 3 meters in the direction of refrigerant flow. All necessary loops and bends shall be provided to ensure proper return of oil to the Compressor. All the piping shall be adequately supported and isolated by means of suitable vibration isolators.

© 2022 MECON Limited All rights reserved

Suction line shall be thermally insulated with polyurethane or equivalent material of adequate thickness.

The following accessories/controls shall be provided for the refrigerant piping :

A. Liquid line strainer/drier
B. Liquid-suction heat exchanger
C. Hand shut-off valves
D. Sight glass etc.

All the piping network shall be pressure tested, leak tested, dried, evacuated and charged with the refrigerant after erection.

Controls & Instruments

- **Pressure gauges**

Pressure gauge shall not be less than 150 mm diameter dial with appropriate working range and be complete with shut off gauge cocks etc., duly calibrated before installation. Pressure gauges shall be provided at the following locations.

A. Supply and return of Chillers and Condensers.
B. Discharge of pumps.
C Inlet and outlet of heat exchangers.
D Supply and return chilled water line of A.H.U.

In refrigerant line suction side gauges shall be compound gauges of the range 0-75 mm (0.3") mercury vacuum and 4 kg/sq. cm positive pressure. Discharge side gauge shall be 0-6 kg/sq cm pressure. Gauge shall be connected to pipe by 6 mm dia copper tubing through 6 mm dia shut off cocks.

- **Thermometers**

Thermometers shall be 150 mm dial type with capillary tube and protective sheets, duly calibrated before installation .

03. Data to be furnished by the Tenderer along with offer:-

1. Refrigerant Compressor

a) Manufacturer
b) Model No.
c) Refrigerant
d) Capacity at operating conditions
e) Maximum speed/operating speed
f) BHP at operating conditions
g) BHP/TR at operating conditions
h) BHP consumption
100% load
75% load
50% load
i) Types of controls offered and make

© 2022 MECON Limited All rights reserved

j) Motor
   - Make :
   - Type :
   - Rating (kW) and RPM :
   - Starter : Make & Type

k) Capacity control
l) Lubrication
m) Total weight
n) Noise level at 1 meter distance in dB(A)
o) Vibration level
p) Vibration isolators details

2. Condenser

a) Manufacturer
b) Shell diameter and length (mm)
c) Tube material
d) Fouling factor
e) No. of tubes
f) Tube diameter (mm) and thickness
g) Tube length (mm)
h) Tube surface area inside (m^2)
i) Tube surface area outside (m^2)
j) No. of passes
k) Water flow (m^3/hr)
l) Water velocity (m/sec)
m) Water temperature entering (Deg.C)/leaving (Deg.C)
n) Fin material and No. of fins/inch.
o) Operating charge
p) Pressure drop
q) Refrigerant temp (Deg. C)
r) Maximum cooling capacity (K.Cal/hr.)
s) Operating weight (kg)

3. Chiller

a) Manufacturer
b) Shell diameter and length (mm)
c) Tube material
d) Fouling factor
e) No. of tubes
f) Tube diameter (mm) and thickness
g) Tube length (mm)
h) Tube surface area inside (m^2)
i) Tube surface area outside (m^2)
j) Water flow (m^3/hr)
k) Water velocity (m/sec)
l) Water temperature entering (Deg.C)/leaving (Deg.C)
m) Fin material and No. of fins/inch.
n) Pressure drop
o) Refrigerant temperature inlet /outlet (Deg. C)

© 2022 MECON Limited All rights reserved

p) Maximum cooling capacity (K.Cal/hr.)
q) Operating weight (kg)

© 2022 MECON Limited All rights reserved

12.0 ES8 – CHAIN PULLEY BLOCK

01. General

This specification outlines the minimum requirement for design, engineering, selection, manufacture, test and supply of Chain Pulley Block with all accessories complete in all respects. Specific technical requirement of Chain Pulley Block if any shall be mentioned in the job specification/data sheet as furnished along with the Technical Specification.

Brief description of the Chain Pulley Block is given below under clause No. 02. The equipment-wise list of data to be furnished by the tenderer along with the offer is shown below under clause No. 03.

02. Description

Hand-operated chain pulley blocks are used extensively for material handling during construction, erection and maintenance of industrial plants.

Chain pulley block shall be considered conforming to IS:3832 – 2005. This standard lays down the general requirements and testing of the hand-operated chain pulley blocks, worm or spur gear type. The minimum requirements of load chains shall be graded to Grade 40. Further a design test to prove the design of the block to a factor of safety of 4 shall be included.

Hand-Operated Chain Pulley Blocks - A block riveted with a load chain and operated by a hand chain so as to give a mechanical advantage.

Design - The blocks shall be so designed that all components shall withstand without failure, an application to the block of a load equal to at least four times the working load limit.

Rating - The hand-operated chain pulley blocks shall be rated according to the working load limit which in case of a block with four or fewer falls shall be determined from the safe working load of the load chain. Where the falls exceed four, or angles are introduced into the chain run, a chain stronger than that for the corresponding four-fold block is required to provide for the additional load caused by friction.

Each chain pulley block shall be subjected by the manufacturer to a proof load of 1.5 times the working load limit through a length of lift which will ensure that every part of the block will sustain the load test.

03. Data to be furnished by the Tenderer along with offer

1. Make & Model
2. Capacity of handling in ton
3. Quantity
4. Class of duty as per IS:3832-2005
5. Head room, mm
6. Lift room, mm

© 2022 MECON Limited All rights reserved

7. Minimum radius of curvature of the track beam with which this hoist can be negotiate
8. Weight
9. Specification of each chain
10. Tools & tackles included in the offer
11. Commissioning spares & 2 years operating spares included in offer.
12. Effort
13. Velocity ratio

© 2022 MECON Limited All rights reserved

13.0 ES9 – COOLING TOWER

01. General

This specification outlines the minimum requirement for design, engineering, selection, manufacture, test and supply of Cooling Tower with all accessories to make operation of Cooling Tower complete in all respects. Specific technical requirement of Cooling Tower if any shall be mentioned in the job specification/data sheet as furnished along with the Technical Specification.

Brief description of the Cooling Tower is given below under clause No. 02. The equipment-wise list of data to be furnished by the tenderer along with the offer is shown below under clause No. 03.

Job specification of the project shall be referred for any specific requirement.

02. Description

Cooling tower shall be power driven or natural draft type and shall be selected to suit the requirement of HVAC system or as per job specification requirement. Induced draft type, FRP cooling tower shall be provided for the cooling of condenser water. Accordingly cooling tower cooling capacity shall be selected with respect to condenser capacity, which shall be min. 20% more than the chiller capacity.

In General FRP type cooling tower shall be provided for the cooling of condenser recirculating water for HVAC application.

The capacity of the cooling tower shall be adequate to take care of the entire cooling water required for the air-conditioning plant. Only make up water will be made available from the plant network.

The cooling tower shall be mounted on masonry pillars on the roof of the AC Plant building or on the ground level near the AC Plant room as per the site conditions.

Normally natural draft cooling tower shall have RCC basin construction. Cooling tower capacity shall be adequate to cool water basin temperature up to maximum 32°C as per prevailing ambient condition.

Cooling towers shall be provided with the following items and accessories unless otherwise specified in the job specifications:

- Type : Induced draft counter flow / cross flow
- Casing/ Basin : RCC (for chilled water plant), FRP (for air conditioning systems)
- Frame Work : MS hot dip galvanized (for air conditioning systems)

© 2022 MECON Limited All rights reserved

- All the fasteners (Bolts, nuts, miscellaneous hardware) shall be of stainless steel or hotdip galvanised steel. Rubber/Neoprene gaskets must be used on all bolted joints as a seal against water leakage.
- Fills : PVC
- Nozzles : Brass
- Fan hub & blades : Cast Aluminium
- Fan type : Axial flow, direct drive
- Fan speed : 720 rpm
- Motor of induced draft fan shall be of weatherproof construction. Degree of protection of motor : IP 55 (temperature rise limited to class B) unless otherwise specified in the electrical specifications.
- Ladder : Galvanised steel ladder with safety cage & hand railing up to the top of tower. Inclined to 300 to the vertical
- Eliminators shall be provided in removable sections and installed in the cell of the tower. The number of deflections in the eliminators shall be so arranged as to limit the drift loss to within 0.01% of the circulated water.
- Level switch at cooling tower basin (to be interlocked with pump)
- Make up connection with float valve (float made of copper), back up ball valve
- Quick fill connection with ball valve
- Overflow connection
- Drain connection with ball valve
- GI wire mesh 18 gauge strainer
- Equalizing line of cooling towers with isolation valves
- Cooling tower basin (for chilled water plant) shall have minimum 5 minute water holding capacity (of circulation water volume)

03. Data to be furnished by the Tenderer along with offer

1. Make & Model
2. Type
3. Quantity
4. Overall size of cooling tower
5. Capacity of cooling in TR.
6. Water flow m^3/h
7. Air flow
8. Design water inlet temperature, outlet temperature
9. Material of construction and its thickness
10. Speed in RPM.
11. Drive details.
12. Shaft Power consumption.

© 2022 MECON Limited All rights reserved

13. Wheel diameter.
14. Efficiency.
15. Size of fan
16. Static & Dynamic weight of fan & motor assembly
17. Bare weight and operating weight of cooling tower
18. Noise level at 1m distance in dB(A)
19. Fixing details.
20. Vibration level.
21. Water spray nozzle type

© 2022 MECON Limited All rights reserved

14.0 ES10 – CYCLONES, MULTI-CLONES & PRE-COLLECTOR

01. General

This specification outlines the minimum requirement for design, engineering, selection, manufacture, test and supply/fabrication of Cyclone / Multi-clone/Pre-collector System with all accessories required to be installed for dust extraction / process application to achieve desired performance in all respects. Specific technical requirement of Cyclone /Multi-clone/Pre-collector System if any shall be mentioned in the job specification/data sheet as furnished along with the Technical Specification.

Brief description of Cyclone /Multi-clone/Pre-collector is given below under clause No. 02. The point wise list of data to be furnished by the tenderer along with the offer is mentioned below under clause No. 03.

02. Description

02.1 Single cyclone/group of cyclones

This shall consist of a vertical cylindrical body, in which dust-laden gas is introduced at the top through horizontal tangential inlet. The cylinder shall have a truncated cone as the lower section. As the gas moves down the cyclone body, it forms a peripheral vortex. This gives rise to centrifugal force, which throws the dust particles in the gas stream towards the walls which then separate from the gas stream and fall down and are taken out through a dust pipe. As the gas reaches the conical portion, the gas stream reverses direction and moves upwards towards the exhaust pipe forming an inner vortex. Cyclones shall be constructed of suitably stiffened mild steel casing of not less than 6 mm thickness. For variable flow application compartmentalized cyclone chamber shall be constructed to maintain required minimum velocity to achieve desired performance .

02.2 Multi-clone

This shall consist of a number of small diameter cyclones operating in parallel. Multi-cell cyclones shall be enclosed in suitably stiffened mild steel casing of not less than 6 mm thickness. The cyclone elements shall in general have diameters of 150 mm and below and shall have smooth finished surfaces. Each unit shall include, but not be limited to the following: gas inlet chamber, cyclone elements with casing, clean gas exhaust chamber, bottom hopper for dust collection, rotary valve for each hopper, a differential pressure gauge to measure pressure drop across the unit and leak proof access openings. For variable flow application compartmentalized cyclone chamber shall be constructed to maintain required minimum velocity to achieve desired performance .

02.3 Pre-Collector

The collector shall be used as a preliminary dust catcher and a common header for different incoming ducts from various suction hoods. The collector shall comprise of cylindrical casing with service doors of quickly clamped type, incoming and exhaust manifold connected to collector, rotary air lock / double flap valve at the bottom. The dust accumulated at the bottom of collector shall be disposed off

© 2022 MECON Limited All rights reserved

through rotary air lock / double flap valve to the conveyor. The velocity of air inside the collector shall be around 4-5 m/s. The Tenderer shall compute the diameter of the collectors to achieve this velocity. The length of the collector shall depend on the convenience of connecting various ducts to it. Duct connections should not be bunched in a particular area and shall be evenly distributed on the cylindrical surface of the collector. The mode of connecting incoming ducts with collector body shall be of flanged type. The air shall enter the collector tangentially and not radially. The exhaust duct shall be fitted to the exhaust manifold by flanged connection. The body and support of the collector shall be designed to withstand its self weight along with the weight of water and dust considering worst conditions.

03. Data to be furnished by the Tenderer along with offer

a) Pre-collector

1. Make & Model.
2. Capacity in m^3/h.
3. Pressure drop in mmWC.
4. Overall size of pre-collector
5. Velocity through collector body in m/sec.
6. Material of construction
7. Cleaning efficiency Vs particle size
8. Methods of dust disposal.
9. Supporting frame details.
10. Total weight of pre-collector

b) Cyclone

1. Make & Model.
2. Capacity in m^3/h.
3. Pressure drop in mmWC.
4. Overall size of cyclone
5. Velocity through cyclone body in m/sec.
6. Material of construction
7. Cleaning efficiency Vs particle size
8. Methods of dust disposal.
9. Supporting frame details.
10. Total weight of cyclone

c) Multi-clone

1. Make & Model.
2. Capacity in m^3/h.
3. Pressure drop in mmWC.
4. Overall size of multi-clone
5. Smaller cyclone diameter of multi-clone
6. Velocity through multi-clone body in m/sec.
7. Material of construction
8. Cleaning efficiency Vs particle size
9. Methods of dust disposal.

© 2022 MECON Limited All rights reserved

10. Supporting frame details.
11. Total weight of multi-clone

15.0 ES11 – DAMPERS FOR AIR FLOW CONTROL

01 General

This specification outlines the minimum requirement for design, engineering, selection, manufacture, test and supply of different type of air dampers required to be installed in the Air Flow Path with all accessories for HVAC and Air Pollution Control Systems. Specific technical requirement of air dampers if any shall be mentioned in the job specification / data sheet as furnished along with the Technical Specification.

Brief description of dry air dampers is given below under clause No. 02. The point wise list of data to be furnished by the tenderer along with the offer is mentioned below under clause No. 03.

02. Description

02.01 Wall mounted dampers

a) Self acting damper (Gravity damper)

Self acting dampers are provided to maintain pressurisation inside the premises. The damper shall be multiblade type made of Aluminium flaps of not less than 24G thickness and MS frame. These shall be designed to operate when the positive pressure inside the premises exceeds 2-3 mm WC. It can operate in fully open or partial open positions.

b) Fusible link fire damper

Fusible link fire dampers are provided to stop the flow of air through the exhaust opening when fire breaks out in the premises. This damper shall be provided on the inside face of wall openings for outlet/exhaust of air from the premises. This damper shall essentially consist of multi-leaf blades, MS frame, fusible link with spring / gravity arrangement for auto closing of the damper. The fusible link shall be made of low melting alloy which can fuse at a temperature of about 70/80°C. The damper shall be normally in open position; it shall close on melting of the fusible link caused by temperature rise due to fire etc. in the premises.

02.02 Duct line dampers

a) Hand operated damper (Geared hand wheel)

The hand operated damper shall be multileaf opposite acting aerofoil blade type damper with external operating links provided at the outlet of the fan for controlling air flow. The damper shall be made of GI sheet with MS frame unless otherwise specified in the job specifications. The

© 2022 MECON Limited All rights reserved

fully close/ open/ partial closing position shall be marked on the damper casing.

b) Electrically operated / pneumatic damper

The electrically operated damper shall be provided as a regulating device for control of air flow through duct as per job specification requirement. Provisions shall be kept for interlocking the damper with fire protection system. The fully closed / open / partial closing position shall be marked on the damper casing.

c) Solenoid operated fire proof damper

This damper shall be provided in supply air duct. It shall be operated by solenoid which is to be interlocked with the fire detection system of the served premises. In case of fire in the premises the fire detection system shall activate the solenoid and the solenoid in turn shall close the damper to stop air flow in the duct line. The fully close/open position of the damper shall be marked on damper casing.

02.03 Dampers for dedusting systems and process applications

a) Dampers for fan inlet / outlet, suction hoods and duct lines

Pneumatic operated, all position, variable inlet vane (VIV) type dampers shall be provided for fan inlet for regulation of air flow. In case standby fans or multiple working fans are connected to the same duct line, fan outlet dampers shall also be provided in addition to VIVs. Further, all fan inlet and outlet dampers shall be motorized or pneumatically operated in case of dedusting, process and hot applications.

BF Stock house dedusting system: Pneumatic dampers, open/close type, shall be provided in the suction hoods of each of the coke screens, sinter screens and iron ore screens and their respective discharge chutes, the suction hoods on the fines conveyors receiving the respective screen under-sizes and the suction hoods on conveyors receiving from the respective weigh hoppers of coke, sinter and iron ore. Interlock with the operation of the respective screens and weigh hoppers shall be done to ensure the opening and closing of the above dampers as per the operation and the job specification requirement. For each suction hood, manual butterfly type dampers shall be provided.

BF Cast house dedusting system: Pneumatic dampers, all position regulating type, shall be provided in the suction hoods of tap hole and tilting runner and pneumatic dampers, open / close type, shall be provided for duct line and all other suction hoods like slag skimmer, slag runner, iron pool, etc.

BOF/LF Secondary dedusting system: All dampers for suction hoods shall be pneumatic, all position, regulating type and duct line dampers shall be pneumatic, open / close type.

© 2022 MECON Limited All rights reserved

For dedusting systems of general material handling systems in junction houses, etc., manual dampers shall be provided at suction hoods and duct lines unless otherwise specified in the job specifications.

All duct line dampers shall be butterfly type with bearings to be outboard with an air gap between its seal and shaft seal. Bearings shall be pre-packaged with lubricant but shall have means of providing additional lubricant and bearing shall be out of air stream. The drive of damper shall be through linear actuator. All actuators shall be provided with manual over-ride.

b) Volume Control Orifice Plate

Single leaf orifice plate shall be provided, if required, in the duct routing after each suction hood for minor adjustment of air flow as per the site performance testing results. However, this shall be used only as a last option and as far as possible, ducting network shall be designed as self balanced type.

c) Design Requirements

All damper components will be weatherproof construction, mounted between flat face flanges.

Lifting lugs will be provided.

Flow direction shall be clearly identified on each damper, to ensure correct installation.

The dampers shall be suitable for installation in both horizontal and vertical ducting.

All dampers shall be located with suitable approaches. The approaches shall also be included in the scope of work of the Tenderer.

d) Actuators

Spring return pneumatic actuator shall be provided for dampers. They shall be operated with compressed air to close and spring to open. Actuators shall be provided with electro-pneumatic positioner, direct mounted to spring return, fail-open actuator. Necessary limit switches shall be provided for position control and indication for all dampers. The number of limit switches, position control and indication shall be governed by the operating philosophy of the dedusting system. Motorized dampers may be provided as per job specification requirements. General requirements of pneumatic / motorized actuators will be as per specifications of electrical / instrumentation.

e) Construction and Fabrication

1. General

© 2022 MECON Limited All rights reserved

The design and material selection of damper assemblies will be capable of meeting the process requirements.

2. Damper Valves

All damper valves will be clearance or ribbed type butterfly dampers, shaft mounted on frictionless bearing, with flat face flanges.

Damper valves will be complete with spring return pneumatic actuator, limit switches for position indication, electro-pneumatic positioner and de-clutchable manual over-ride. All components will be integrally mounted on the valve.

System will fail in the open position at loss of pneumatic or electrical signal.

Each limit switch will be supplied with open and closed contacts.

Fan inlet dampers and dampers for suction hoods of tap hole, tilting runner, secondary dedusting systems and other specialised applications will be all position regulating type.

Rate of damper leakage in the fully closed position is to be given as a percentage of the normal flow with the damper open, and shall not exceed 1%.

3. Actuators, Limit switches, and Positioners

Actuator will be spring return, single acting, pneumatically operated, for 0 to 90 degree travel. The entire train will be totally enclosed within single cavity housing.

Actuator will have external manual indication of valve and output shaft position. Indicator shall be of corrosion resistant materials, in contrasting colour to actuator body. Indicator shall be the sole external moving part.

Actuator will be capable of being mounted directly to the damper valve.

Actuator will be complete with external de-clutchable manual over-ride, which will have safety interlock to exhaust air from actuator when manual mode is selected. All moving parts must be totally enclosed.

Actuator will be operable with valve installed in any position without loss of performance and will be mounted parallel to the pipe.

Actuators are to be sized to operate with compressed air supply 5 to 7 kg/cm² pressure.

Actuator will be complete with position indicating switches. Switches will be totally enclosed, in approved IP-65 enclosure, for corrosive

© 2022 MECON Limited All rights reserved

environments. Switches will be CAM operated and cams will be independently adjustable throughout the full actuator travel range. Switches will have external position indicator to the same specification as the basic actuator.

Actuator will also be complete with electro-pneumatic valve positioner, suitable for spring return, fail-open operation.
Motorized dampers may be provided as per job specification requirements.

4. Manual Over-ride

The de-clutchable manual over-ride mounted on the damper valve will be of a worm and segment actuator, in which the worm-drive shaft can be rotated eccentrically by the worm-drive lever to disengage the worm from the segment. The segment is then free to rotate when driven by the actuator.

The drive-shaft will have an internal locking device to lock it into the selected mode of operation.

Normal operation is with the worm-drive lever in the "auto" position. In this position the worm-drive will be disengaged from the segment gear, and the actuator will be free to rotate the valve shaft.

To engage the de-clutchable manual over-ride, the worm-drive locking button, mounted on the unit, will be released allowing the worm-drive to rotate to the "manual" position.

5. Control Equipment Enclosure

A covering will be supplied for each damper to protect the actuator control equipment from the local environment, such as dust, and sprayed water during routine clean-ups. Enclosure shall be IP-65 rated.

6. Materials

Damper valve body, disc, and shaft and de-clutchable manual over-ride will be carbon steel construction, suitable for the rugged service demands encountered during operation.

Actuator housing will be hard anodized, extruded aluminum. End caps and pistons will be pressure die-cast aluminum. Output shaft will be heat treated steel. All actuator seals will be of Nitrile material and will be of O-ring construction

7. Valves

The broad specification for the different categories of valves pertaining to compressed air and water line are as follows:

Isolation valves - for size 50 NB and below, screwed end ball valve

© 2022 MECON Limited All rights reserved

with SS ball & cast steel casing shall be supplied.

- for size above 50 NB butterfly valve with SS disc & cast steel casing shall be supplied.

8. Pipelines

Compressed air & water pipelines along with accessories and supports are in the scope contractor up to design limit. Pipelines will be GI (as per IS 1239, part I) and heavy class.

03. Data to be furnished by the Tenderer along with offer

The following data shall be furnished by the tenderer along with the offer.

03.01 Wall Mounted Dampers

a) General data applicable for all types of dampers

1. Size
2. Quantity offered
3. Material of construction and its thickness
   i) Frame
   ii) Blade
   iii) Flange
4. Provision of horizontal & vertical direction control
5. Weight
6. Velocity of air

b) Self acting damper

1. Operate on differential pressure requirement mm WG –

c) Fusible link fire damper

1. Material of fuse link
2. Melting temperature of the fuse link

03.02 Duct line Dampers

a) Hand operated damper (Geared hand wheel)

1. Operating device

b) Electrically operated / Pneumatic damper

1. Type of actuator
2. Motor kW /Pole (in case of electrically operated damper)
3. Pneumatic piston (for pneumatic operated damper): make, type and weight
4. Compressed air requirement with pressure for pneumatic operated damper

© 2022 MECON Limited All rights reserved

c) Solenoid operated fire proof damper

1. Type of actuator
2. Supply voltage and solenoid power supply rating

© 2022 MECON Limited All rights reserved

16.0 ES12 – DUCTING NETWORK FOR DUST EXTRACTION SYSTEM

01. General

This specification outlines the minimum requirement for design, engineering, selection, manufacture, test and supply/fabrication of Ducting Network with all accessories required to be installed for Dedusting System application to achieve desired performance in all respects. Specific technical requirement of Ducting Network of Dust Extraction System if any shall be mentioned in the job specification/data sheet as furnished along with the Technical Specification.

Brief description of Ducting Network of Dedusting System is given below under clause No. 02. The point wise list of data to be furnished by the tenderer along with the offer is mentioned below under clause No. 03.

02. Description

Ducting Network shall comprise of suction hood, ducting, duct support, measuring hatch, cleaning hatch and duct line dampers as required.

The suction hoods and enclosures shall be constructed of 5 mm MS plate unless otherwise specified in the job specification with necessary external stiffeners, flanges, counter flanges, fasteners, gaskets and other accessories for fixing with technological equipment and duct line. Dust collection hoods and enclosures shall be fitted with conveniently placed hinged access doors (top hinged type) to enable internal access to the equipment for maintenance as required. The air velocity at hood inlet shall be 1.5m/s (max). Suitable refractory lining shall be provided for ducting, suction hoods and dust collection enclosures in high temperature zones.

Duct work details shall have following minimum features :

1) Construction

The duct sizing shall be so selected to maintain proper conveying velocity throughout the system. Man holes/hand holes and dust outlets shall be provided at intervals to facilitate cleaning of dusts and for disposal of dust. The successful tenderer shall design the dedusting system ductwork connecting the dust collection hoods, to the dust collector, fans and stack. The ducting shall be fabricated from M.S.(IS 2062: 2006) having thickness as follows unless otherwise specified in the job specification :

Duct diameter	Straight line duct thickness	Bend Thickness
Upto 500 mm	3.15 mm	4 mm
Upto ϕ 900mm	4 mm	6 mm
ϕ 900mm to ϕ 1500mm	6 mm	8 mm
ϕ1500mm to ϕ 2000 mm	8 mm	10 mm
above ϕ 2000mm	10 mm	10 mm

© 2022 MECON Limited All rights reserved

At all duct bends (carrying abrasive dust such as sinter dust etc.) above 900 mm diameter shall have abrasion resistant liners with caster wood / rock basalt / FRP in line with job specification requirement .

Thickness of flanges shall be 12 mm. Necessary stiffeners shall be provided in the duct, depending on size. The ducts shall be laid vertical as far as practicable for dedusting installations and horizontal ducts should be avoided.

For special application corrosion / abrasion resistant duct liner material of construction of FRP / Liner material may be required to be installed in line with job specification requirement.

2) Conveying velocity

A conveying velocity of 18-22 m/s shall be maintained at all points in the ductwork between dust collection hood and dust collection plant to ensure flow of air without settling of dust .

Expansion joints shall also be provided in the ducting network to reduce thermal stress as required.

3) Provision for Slide Gates/ Dampers

All extraction points shall have slide gates (single leaf inclined plate type) / dampers provisions for flow balancing during commissioning if required. These gates/dampers shall be bolted by the successful tenderer in position after commissioning to prevent inadvertent operation and consequent un-balancing of flow of the dedusting system.

4) Provision of Flow Testing Points

Main duct and all major branch ducts shall have two 100mm diameter capped sockets installed at 90° to one another at least 8D away from flow disturbance (bends, hood inlets) for insertion of pitot tubes for flow measurement and system balancing during commissioning. Test points are to be located in a readily accessible position in the duct. However in any suction hood if flow appears to be on the lower then necessary flow measurement and correcting device shall be made by the successful tenderer to suit site.

5) Straight Duct Runs

Interconnecting duct work shall be circular in cross section. The duct work shall be fabricated from mild steel plate, IS 2062:2006 or be seam welded spiral wound duct work as per job specification requirement.

6) Branches

© 2022 MECON Limited All rights reserved

Branch connections should be oriented to the top or side of the main with no two branches entering at opposite sides.

7) Joints

Matching flanges are to be bolted together with asbestos rope gasket or rubber gaskets. All bolts and gaskets for jointing shall be included in the scope of work of the successful tenderer. All duct joints are to be air tight to minimise air leakage.

8) Duct Cleanout Doors

Clean-out doors will be provided on horizontal runs, before elbows and junctions. The spacing between cleanout doors should not exceed 6 meters. Clean out doors will be constructed to have a diameter of 600 mm or the duct diameter which ever is less for ducts upto 1 meter diameter. Larger diameter ducts will have clean out doors sized 600 mm high by 600 mm wide.

9) Duct system hangers and supports

The ductwork support spacing and hangers will be designed for the weight of settled dust plus a 25% design margin. Following dust load will be considered for designing duct and duct support and duct stiffeners.

Duct dia (in mm)	**% Cross section of duct filled up with dust**.
500 and below	70 %
Above 500 to 1000	50 %
Above 1000 diameter	30 %

Bulk density of dust will be considered 2.2 t/m³ for iron ore and sinter dust and 0.7 t/m³ for coal / coke dust, unless otherwise specified in job specification.

All duct inside buildings and duct along main structural building will be supported from plant building structure for which load data shall be furnished by successful tenderer within 15 days of placement of order. Details of duct supporting members will be decided during detail engineering. To suit site condition supporting members may have to be modified by the successful tenderer without any commercial implication to the purchaser. All outside ducting network shall have independent duct supporting trestles.

10) Ductwork Layout

Ductwork will not interfere with fixed or mobile crane access to the plant. Horizontal run of the ducting will be avoided to prevent settling of dust.

© 2022 MECON Limited All rights reserved

Minimum horizontal clearance from road center line is 5 meters. It is the responsibility of the successful tenderer to effect the dedusting system ductwork arrangement in accordance with the design requirements set down in the specification and to the satisfaction of the purchaser / consultant.

11) Ductwork integrity

The successful tenderer shall design the ductwork in such a way to ensure that the ductwork will not collapse at any point, should it be subject to the maximum suction capacity of the fan system. The design shall accommodate any variation in ambient temperature.

12) It is the responsibility of the Successful tenderer to size all ductwork in detail as per duct balancing calculation. Duct balancing calculation will be furnished by the successful tenderer for approval of the purchaser. It is the Successful tenderer's responsibility to establish routes both inside and outside building. This is to be done in conjunction with and to satisfy the Purchaser.

13) The duct work will be self pressure-balanced type. However, during testing and commissioning if any throttle piece is required for adjustment of flow in any duct branch same will be carried out by the successful tenderer without any commercial implication.

14) Flexible connection at inlet & outlet of fan and in the ducting network will be provided by the successful tenderer as required.

03. Data to be furnished by the Tenderer along with offer

The following data shall be furnished by the tenderer along with the offer.

Ducting

1. m^2 of duct work
2. Weight of duct work
3. Weight of supports and flanges
4. Material and thickness of duct work

Suction Hood

1. Material of construction
2. Measuring hatch provided or not
3. Capturing velocity
4. Hoods sizes

© 2022 MECON Limited All rights reserved

17.0 ES13 – DUCTING NETWORK FOR HVAC SYSTEM

01. General

This specification outlines the minimum requirement for design, engineering, selection, manufacture, test and supply/fabrication of GI/MS Ducting Network with all accessories required to be installed for HVAC application to achieve desired performance in all respects. Specific technical requirement of Ducting Network if any shall be mentioned in the job specification/data sheet as furnished along with the Technical Specification.

Brief description of Ducting Network is given below under clause No. 02. The point wise list of data to be furnished by the tenderer along with the offer is mentioned below under clause No. 03.

02. Description

The ducting network comprises of ducting work, duct line dampers, down comer & supply air diffuser with volume control damper for HVAC system, supply air grill/ adjustable louver grill duct supporting arrangement, flexible connections, etc.

All GI / Aluminium ducting work for airflow shall conform to IS 655: 2006. Galvanised steel sheet conform to IS 277: 2003. As per job specification requirement ventilation duct may be fabricated from steel sheet conforming to IS 2062 :2006.

These items are briefly described below:-

a) Ducting work

Ducting work consists of main duct, branch ducts, bends, reducers, joints, access doors, etc. Duct work shall be complete with flanges, gaskets, stiffeners, fasteners (nuts, bolts & washers), hangers, etc. as required. Minor modification of ducting network may be required to suit site condition. GI Ducts shall be fabricated at site to match with site condition.

All ducting work shall be properly reinforced to prevent sagging, buckling or vibration.

GI Ducting shall be provided with joints at 2.5 - 3m interval conforming to IS 655: 2006 as and where required. In case of flanged joints, the flanges shall be of angle iron type riveted with GI sheet on duct perimeter. Flange joints should be made air tight with use of felt gaskets.

Duct supports shall be provided to keep the ducting in position in aligned condition.

Measuring hatch for measurement of flow / pressure shall be provided in ducting network at convenient locations.

© 2022 MECON Limited All rights reserved

For proper distribution of air in the premises, supply air grills (adjustable louver grills) with volume control dampers shall be provided in the ducting work for ventilation system and supply air diffusers with volume control damper shall be provided in the ducting work for air conditioning system.

Sizing of the duct shall be done for pressure balancing as well as to maintain the air velocities in the ducting work as given below: -

Description	Air Velocity for Ventilation System	Air velocity for Air conditioning system
Main duct	8 – 10 m/sec.	6 – 8 m/sec.
Branch ducts	6 – 8 m/sec.	4 – 6 m/sec.
Supply air grills	4 – 6 m/sec.	-
Branch risers	-	4 – 5 m/sec.
Supply air diffuser	-	3 – 4 m/sec.
Fresh/Make up Air filter	-	1 – 2 m/sec.
Fine filter	-	1 – 1.5 m/sec
Return air duct / grill	-	2 – 3 m/sec.

The following accessories may be fitted in the duct line depending upon the job specification requirement.

i) High efficiency filter
ii) Strip heater for dehumidification purpose
iii) Pan humidifier for humidification purpose

Joints :

In line with IS 655: 2006 guide lines the type of transverse joints shall be followed unless otherwise specified in job specification :

Sealing:

All construction joints and duct seams shall be reasonably sealed with bitumastic cold emulsion or equivalent vapour seal.

Bends :

The interior of all ducts shall be smooth for free flow of air. The radius to bend shall not be less than 1.5 D. Turning guide vane shall be provided in all large duct bends and bends with radius less than 1.5 D for proper air flow.

Access door :

© 2022 MECON Limited All rights reserved

All main ductwork shall be accessible throughout using tight fitted hinged access doors, provided with sponge rubber gaskets. Angle joints shall be provided with felt or rubber gaskets for leak-tightness of the joints.
Access doors/panels are to be provided at following places :

- Near each fire damper
- Near each Reheat coil
- Near high efficiency filter/absolute filter

Any other place if envisaged by the owner about its essentiality during drawing approval or construction period.

In case access doors are to be installed in the insulated ducts, the access door panel should be insulated too with overlapping, such that it can be operated without damaging the duct insulation and there should be no condensation either on the access doors or on the duct when the plant is in running condition.

Duct line dampers :

Refer equipment specification no. ES-11.

c) Adjustable louvers grill (Supply air grill) with volume control damper for ventilation system

1.25mm MS sheet shall be used for the manufacture of grill. All grills shall be true to shape and shall be checked with a level gauge before being secured in position. No distortion or warping is permitted.

All duct mounted grill shall be complete with rubber gaskets and flanged holding frames of suitable design for the intended installation. They shall be mounted on collar extending from the duct. No part of grilles shall project into the main duct. The adjustable louver grill shall be provided with volume control damper as well as double deflection flap/ grill for direction control.

d) Supply air diffuser with volume control damper for AC System only

Thickness of Grills, Diffuser, Damper shall be as follows:

(a)	Frame	16 gauge
(b)	Louvers	18 gauge

Supply air diffusers shall be circular/rectangular in shape as per detailed engineering requirement. The throat of a diffuser shall be connected with collar piece provided at the duct bottom for holding the diffuser as well as for supply of air. Each diffuser shall be provided with volume control damper. Each diffuser shall comprise of fixed plate, damper blade, damper blade operating knob, spindle, connecting rod etc. The diffuser should flush with the false ceiling. False ceiling shall not bear the load of any diffuser.

© 2022 MECON Limited All rights reserved

The load of diffuser shall be borne by the duct and collar. Each diffuser shall be painted with appropriate colour to match with the colour of the false ceiling. Diffuser shall be placed considering light fittings position and false ceiling runner position. Diffusers/grills shall be of extruded aluminum powder coated / Anodized aluminum.

e) Return air grill

In general the return air opening shall be provided above false ceiling in the wall between served premises and A.C. plant room. The return air grill of suitable size shall be provided at the A.C. plant room side face of the said opening for smooth flow of return air. The air supplied in the served premises shall return above false ceiling through the return air slit of 50~100 mm all around false ceiling along the walls of the served premises. From there it shall pass into the A.C. plant room through the return air passage. The return grill shall comprise of horizontal fixed louvers made of 2 mm thick MS sheet, 50x6 thick MS flat shall be placed vertically at middle of the louvers with 50x50x6 size angle frame all around. Spacing of the fixed louvers in the grill shall be 25 mm.

f) Insulation

Sheet metal duct shall be acoustically and thermally insulated as per requirement. For details of insulation refer respective equipment specification.

g) Flexible connections

Flexible material shall be used for fabrication of flexible connections. These shall be of at least 100 mm length and shall be provided at each connection between duct work and fan units and any other places as asked for in the job specification. Flexible connection material shall be selected considering the temperature and pressure of the system.

h) Hangers & supports for ducting

All duct work shall be provided with adequate supports as required to ensure rigid support and to prevent vibration.

The fixing and supports interval shall not exceed 3 meters. Hanger rods having U-bend at one end and threading at other end shall be hung from the ceiling by anchor fasteners / expansion bolts. Duct angle supports from brick wall/RCC wall/ structural wall shall be grouted / welded to suite site.

i) Make up air filter with damper

Make up air for packaged air conditioner and AHU will be drawn from ambient through filter and volume control damper.

03. Data to be furnished by the Tenderer along with offer

© 2022 MECON Limited All rights reserved

a) Ducting

1. m^2 of duct work
2. Weight of duct work
3. Weight of support and flanges
4. Material and thickness of duct work
5. Duct support type and material
6. Velocity of air.

b) Supply Air Grills / Diffuser with volume control facility

1. Size
2. Quantity offered
3. Material of construction & thickness
4. Provision of horizontal & vertical direction control
5. Weight
6. Velocity of air
7. Methods of volume control

c) Return air grills / intake air louvers

1. Size
2. Quantity offered
3. Material of construction
4. Weight
5. Velocity of air

© 2022 MECON Limited All rights reserved

18.0 ES14 – ELECTROSTATIC PRECIPITATOR

01. General

This specification outlines the minimum requirement for design, engineering, selection, manufacture, test and supply/fabrication of Electrostatic Precipitator (ESP) System with all accessories required to be installed dust extraction / process application to achieve desired performance in all respects. Specific technical requirement of Electrostatic Precipitator (ESP) System if any shall be mentioned in the job specification/data sheet as furnished along with the Technical Specification.

Brief description of Electrostatic Precipitator (ESP) System is given below under clause No. 02. The point wise list of data to be furnished by the tenderer along with the offer is mentioned below under clause No. 03.

02. Description

Electrostatic Precipitator and Accessories will include the following:

- Housing assembly of fabricated plate work.
- Gas distributor plate at inlet and outlet of ESP.
- Dust hopper assembly of fabricated plate work.
- Mixing chamber / Static mixer before ESP
- Discharge electrodes.
- Dust collecting electrodes.
- Rapping units for both discharge, collecting electrodes and gas distributors.
- ESP supporting structure complete with service platforms (minimum width 1.2 m) and walkways, stairs, hoisting facilities, overhead canopy, etc.
- Thermal insulation of ESP casing and hoppers along with hopper heating arrangement to avoid condensation.
- Flexible connection with matching flanges at ESP inlet and outlet.
- The number of electric fields shall be considered suitably to achieve required stack emission standards unless otherwise specified in the job specifications.
- Two nos. rapping system (for collecting electrodes) shall be provided at the last two fields to control puffing of dust.
- Specific collection area shall be considered based on tenderer's experience on past project. However required specific collection area shall not be less than the minimum as defined in the job specifications.
- Electrics as given below:
    - High voltage power supply package.
    - Power supply to all drives with interlocks and controls.
    - TR controller with feedback control optimization of current voltage from on line continuous stack monitoring instruments .
    - For details refer job specification requirement.
    - Temperature and pressure transmitter, CO gas analyser as required.

© 2022 MECON Limited All rights reserved

- ESP system will comprise of multiple fields, unit/multiple cells Electrostatic Precipitator (ESP) and its accessories such as Dust disposal system, Electrics and control, Instrumentation, interlocks, Supports etc.

Design requirement

1. The Electrostatic Precipitator (ESP) will be in general dry, horizontal flow type. It should be a completely self-supporting unit, ready to be assembled on the foundation.

2. Configuration

The Electrostatic Precipitator will feature one gas pass design with compensator at inlet & outlet of ESP.

3. Electrostatic Precipitator Casing

a) The precipitator steel casing will be gas tight and of welded construction throughout. Casing plate thickness will be 6 mm minimum unless otherwise specified in job specification.

b) ESP casing shall be suitable to withstand cold test commissioning at shut off head of fan, without suffering structural or mechanical damage. For gas cleaning system, working pressure will be maintained as per system requirement. The normal working pressure of suction and temperature will be considered as per system design unless otherwise specified in job specification.

c) The precipitator will have access openings ladders, stairs, platform etc. necessary for inspection, cleaning and maintenance. All equipment and the openings will be made accessible to the maintenance personnel by installation of access ways, stairs, ladders, platforms etc.

d) Sealing of glands, inspection doors, etc. must be such that air is prevented from leaking into the electrostatic precipitator to prevent infiltration of ambient air. The precipitator will be of weatherproof construction.

4. Electrodes

a) The discharge electrodes system should be able to withstand efficient rapping and temperature changes.

b) Collecting electrodes will have a spacing of approximate 400 mm. The collecting plates should be 1.5 mm thick CR sheets to ensure an adequate service life.

c) Discharge electrodes and collecting plates will be automatically and sequentially rapped with heavy duty hammer rappers.

5. Rapping

© 2022 MECON Limited All rights reserved

The electrode rapping system will be capable of maintaining clean electrodes. The supplied rapping mechanism will feature a microprocessor based adjustable rapping frequency for each field.

6. Insulator housing

Special attention will be given to the rapping shaft insulators. These will be electrically heated to avoid condensation and will have efficient seals to avoid dust deposits.

7. Safety

The Electrostatic Precipitator will be provided with a key interlocking system for preventing access to high voltage internals of the precipitator until the associated high voltage system is de-energised and grounded. All the access openings will be provided with earthing rods. The earthing strips will be of GI and it will be firmly bolted to the precipitator casing.

8. Hoppers

Each field of the Electrostatic Precipitator will be fitted with a dust hopper. The hopper will be constructed of 8 mm plate unless other wise specified in TS. The hoppers will have a pyramidal / conical configuration with 65°valley angle minimum.

Inspection doors, poke holes and electric heaters will be provided in the hoppers. Motorised double cone valves / RAVs will be provided at the hopper discharge. High and intermediate level switches will be installed in each ESP hopper. With the help of intermediate level switch dust in hopper can be discharged into the chain conveyor by double cone valve / RAV. High level switch in ESP hopper will be provided for safety interlocks. Stainless steel liner of 1.6 mm thick up to a height of 1.2 m from the bottom flange of ESP hoppers and storage hopper will be provided for smooth flow of dust.

Separate dust-dumping outlets with flange provision, necessary chutes, gates etc. will be provided by Successful Tenderer with ESP hoppers of last two fields for dumping of dust in case of increase in alkali content to prevent recycling of dust under emergency situations as per technological requirement. Therefore, Truck / dumper entry provision below each ESP hopper will be provided by Successful Tenderer for dust disposal.

9. Insulation

ESP walls, roof panels, and hoppers will be provided with thermal insulation of resin bonded mineral wool of density 100 kg/m³ as per IS 8183 :1993 (RA 2004) having 50~100mm thickness for hot gas application as per technological requirement. The thermal insulation will be covered with 0.8 mm CGI sheet cladding.

10. Platforms and access ladders

© 2022 MECON Limited All rights reserved

The minimum platform width will be 1.2m. The platforms will be located at the top of hoppers level and at the top of the gas cleaning equipment. Safe guard rails will be provided around all the platforms. Angular rather than round members will be used, as far as possible. Safe and easy access to the platforms will be provided by providing stairways to chain conveyor platform level, ESP chamber access door level, ESP top and transformer house etc. Maintenance platforms all over ESP area, at dust disposal conveyor level will be provided. Access door to ESP chamber will be provided from both sides. Access doors to distributor grid will also be provided. Maintenance platforms at access door level all around ESP will be provided. Ladder approach with platform will be provided for hopper level switches, access doors, hopper heater and for any other equipment or access above man height.

11. Material of construction:

Sl. No.	Item	Material	Thickness (min)
1.	Collecting Electrodes	IS 513 : 1994 (RA 1998) CR sheet	1.5 mm
2.	Discharge Electrodes	IS 513 : 1994 (RA 1998)	spiral SS coil / rigid member
3.	ESP casing	IS 2062 : 2006 Gr. A	6.0 mm thick
4.	G.D. screen	IS 2062 : 2006 Gr. A	3.15 mm
5.	Hopper wall	IS 2062 : 2006 Gr. A	8.0 mm thick
6.	Pent house roof (insulator hamber)	IS 2062 : 2006 Gr. A	5.0 mm thick
7.	Side wall of insulator chamber	IS 2062 : 2006 Gr. A	3.15 thick
8.	ESP inlet and outlet connection piece	IS 2062 : 2006 Gr. A	8.0 mm
9.	Handrail	IS 1239 : Part 1 : 2004	Minimum 32 NB
10.	Post	IS 1239 : Part 1 : 2004	Minimum 40 NB
11.	Access grating, stair treads	IS 2062 : 2006	45 depth – 6 mm thick, 40 centre to centre
12.	Insulation of ESP casing (for hot gas application)	Resin bonded mineral wool IS 8183 :1993 (RA 2004) density 100 kg/m^3	50~100mm thick with 0.8 mm CGI sheet cladding as per specific application
13.	Insulation of hopper (for hot gas application)	Resin bonded mineral wool IS 8183 :1993 (RA 2004) density 100 kg/m^3	50~100mm thick with 0.8 mm CGI sheet cladding

Keeping in view the properties of the dust, the Successful Tenderer will make selection of material and thickness of plates and supporting structure. However, minimum material of construction specification shall be as mentioned above.

12. Air tightness of ESP housing

© 2022 MECON Limited All rights reserved

The construction of the ESP housing and design of dust disposal gates, insulator boxes and discharge electrodes will be such that air infiltration inside ESP housing is negligible to prevent corrosion problem and idle suction.

Design Criteria

1. Process Parameters

Following technical input parameters will be considered as a general guide line only for designing the ESP since the actual gas & dust composition and condition of gases changes based on operation / process condition of technological plant. Based on the job specification technological data as well as past experience of successful tenderer and their collaborator on design of ESP for technological process, successful tenderer will demonstrate and establish performance guarantee parameters under varying process parameters.

i)	Type / vertical	:	cells, fields, dry / wet, horizontal
ii)	Gas handled application	:	Dusty gas from process
iii)	Design flow	:	m^3/hr (avg.). at operating temp.
iv)	Temperature	:	-- °C Normal -- °C maximum
v)	Bulk density of dust	:	- t/m^3.
vi)	Dust content at ESP inlet	:	- gm/Nm^3.
vii)	Dust content at ESP outlet	:	- mg/Nm^3.
viii)	Gas velocity through ESP	:	- m/s
ix)	ESP duty condition	:	24 hrs continuous operation
x)	Chemical composition of flue gases / dirty air / gases (% vol.)	:	Oxygen - Carbon dioxide - Carbon monoxide - Nitrogen - Sulphur dioxide- Moisture- Other constituents-
xi)	Chemical composition of dust (% weight)	:	CaO - SiO_2 - Fe_2O_3 - Fe – FeO – Al_2O_3 - MgO – MnO - P - S - C - Na_2O & K_2O - Other constituents-

xii) Particle size of dust (% distribution);

< 5micron :

© 2022 MECON Limited All rights reserved

5-10 micron :
10-20 micron :
20-30 micron :
30-40 micron :
> 40 micron :

xiii) Expected cleaning efficiency under normal design condition:
(moisture content -v/v, Temperature : Deg C ,
Inlet dust content - gm/Nm3, Gas flow volume – m^3/hr)

xiv) Basicity Ratio –

xv) Migration velocity – cm/sec

xvi) Casing design condition - mmWC suction / ---°C

xvii) Permissible noise level - 85 dB (A)

2. Guaranteed Emission value

The efficiency of the ESP will be such that the guaranteed emission of dust from stack will not be more than 50 mg/Nm^3 or as per job specification requirement.

Correction curves for calculating revised efficiency will be applicable for change in following input parameters:

a)	Temperature	:	Design temperature will be considered as defined in the TS.
b)	Moisture content	:	Correction factor will be not be applicable
c)	Dust load	:	Correction factor will be not applicable as this is a technological parameter of process designer.
d)	Gas flow	:	Positive factor or negative correction factor will be applicable for decrease or increase in gas flow respectively.
e)	Dust composition, gas composition and particle size analysis	:	No correction factor will be applicable for change in said parameters. Successful tenderer will select the ESP which will be suitable for dust generated by the specific process.

3. The Successful Tenderer will adopt the following criteria while designing dust disposal system.

i) Easy maintenance of dust disposal equipment.
ii) Minimisation of outside infiltration to the ESP casing.
iii) Moisture regulation facilities to control dry dust disposal nuisance as well as too much wet dust handling problem.

4. The equipment will be suitable to operate satisfactorily under such variations of load, pressure and climatic conditions as may occur during working.

© 2022 MECON Limited All rights reserved

5. Working parts of all equipment will be suitably located for convenient operation and will allow access to facilitate easy replacement, connecting up, inspection, lubrication, maintenance and repair, without dismantling other equipment/ components/ structures.

6. The Successful Tenderer will carry out Computational Fluid Dynamics (CFD) based computerized model testing for gas flow distribution inside ESP for the project. The results of the CFD model study shall be submitted to the purchaser and consultant for their perusal and comments, if any before proceeding with the manufacture.

7. Design calculation of ESP main supports, weather enclosure, structures, platform will be based on IS 875 : 1987 Part 1, 2 & 3 (RA 2003) and IS 800 : 1984 (RA 1998). Service load of 4 KN/m^2 and 2 KN/m^2 will be considered for maintenance platform and walk ways respectively.

8. Compensator between rotary feeder and the chain conveyors, between two conveyors and between dust moistener and rotary feeder will be provided to facilitate maintenance. Slide gates will be provided before all the double cone dust valves / rotary feeders. For calculation and design of structural members, accidental fill up of dust up to top of ESP hoppers in worst case will be considered by Contractor.

9. To ensure safe and reliable operation of ESP, the Successful Tenderer will provide the following minimum safety measures.

   i) Prevention of condensation inside ESP chamber.
   ii) Prevention of damage to rapping system.
   iii) Prevention of insulator creeping and damage.
   iv) Prevention of air leakage and corrosion.
   v) Provision of heat expansion accommodation.
   vi) Prevention of personal injury.
   Lightning resistance and grounding
   Explosion protection arrangement.

03. <u>Data to be furnished by the Tenderer along with offer:</u>

Sl.No.	Item Description	Technical Data
A.	ESP design data	
1.	Model No.	
2.	Treatment velocity	
3.	Treatment time sec / Treatment length m	
4.	Aspect ratio	
5.	Press, drop mm WC	
6.	Migration velocity cm/sec	
7.	Guaranteed outlet emission at design conditions	
8.	Wt. of ESP with dust, ton	
9.	Overall size, Approx. WxLxH m	
10.	Cross sectional Area m^2	

© 2022 MECON Limited All rights reserved

Sl.No.	Item Description	Technical Data
11.	Collaborator	
12.	Casing Design condition	
13.	TR set rating	
14.	SCA m²/m³/sec.	
B.	Collecting Electrode	
1.	Material	
2.	Height m	
3.	Spacing mm	
4.	Area m²	
5.	Rapper type	
C.	Discharge Electrode	
1.	Type	
2.	Material	
D.	ESP – Proper	
1.	Gas distributor	
2.	Insulator heating	
3.	Bearing	
4.	ESP, inlet and outlet cones	
5.	Enclosure sheeting & fixing hardware for TR set	
6.	Monorail with electrical operated trolley and hoist for lifting TR sets	
7.	Insulation of casing and hopper	
8.	TR Rating and Drive Rating in kW	
9.	TR sets for different fields with quantity	
10.	Rappers : Gas distributor Collecting Electrode Discharge Electrode	
E.	ESP Hopper	
1.	Quantity	
2.	Hopper volume each	
3.	Valley Angle in deg.	
4.	Hopper heater	
5.	RAL Valve	
F.	Safety Interlock System	
1.	Mechanical Key interlock safety system for each access door	
2.	Lightning arrestor and grounding	

© 2022 MECON Limited All rights reserved

19.0 ES15 - FILTER DRY TYPE

01. General

This specification outlines the minimum requirement for design, engineering, selection, manufacture, test and supply of different types of dry air filters required to be installed in the Air Flow Path with all accessories for HVAC system to achieve desired efficiency of cleaning. Specific technical requirement of air filter if any shall be mentioned in the job specification/data sheet as furnished along with the Technical Specification.

Brief description of dry air filter is given below under clause 02. The point wise list of data to be furnished by the tenderer along with the offer is mentioned below under clause 03.

02. Description

Dry panel type air filter shall be of high efficiency cleanable type, constructed out of HDPE (6 ply) supported by layers of GI wire gauge. It shall be corrugated to the depth of filter casing in order to increase the ratio of filtration area to frontal area. It shall be covered by strong GI/MS frame and shall have space to ensure uniform distribution of air. Filtering panel shall be of standard size which can be mounted on angle frame in multiple number as per capacity of the fan. Face velocity of air shall not exceed 1.5 m/sec. The resistance of air filter shall not exceed 10 mmWC when dirty. Efficiency of the normal air filter shall not be less than 90% down to 10 microns unless otherwise specified in the job specifications. Cleaning efficiency of the high efficiency air filter shall not be less than 99% down to 5 microns unless otherwise specified in the job specifications. Absolute filter as required shall be considered in line with job specification requirement. Panel type air Filters testing shall conform to IS 7613 : 1975 (RA 2001). A compressed air tapping with isolation valve and hose shall be provided near to the filter installation for periodical cleaning of the filter.

03. Data to be furnished by the Tenderer along with offer

a) Dry Panel type filter

1. Make & Model.
2. Capacity in m^3/h.
3. Pressure drop in mmWC.
   i) When clean
   When dirty
4. Effective cross sectional free and face area in m^2
5. Velocity through filter free and face area in m/s.
6. Material of filtering panel and construction details.
7. Cleaning efficiency Vs particle size
8. Methods of surface regeneration.
9. Filter box construction details.
10. Overall dimensions & no. of filters.
11. Fixing frame details.
12. Total weight
13. Module size and no. of modules.

© 2022 MECON Limited All rights reserved

20.0 ES17 – THERMAL & ACOUSTIC INSULATION FOR HVAC (INSULATION FOR COLD APPLICATION)

01. General

This specification outlines the minimum requirement for design, engineering, selection, manufacture, test and supply of Insulation with all accessories for HVAC application. Specific technical requirement of Insulation if any shall be mentioned in the job specification/data sheet as furnished along with the Technical Specification.

Brief description of the Insulation is given below under clause No. 02. The equipment-wise list of data to be furnished by the tenderer along with the offer is shown below under clause No. 03.

02. Description

The insulation of water piping, air-handling units, ducting, chillers etc. shall be carried out as per following specifications (a) to maintain proper temperature of fluid / vapour in the conduits (b) to prevent surface condensation on cold surfaces.

Insulation Materials :

The materials to be used for insulation shall be as follows, unless some other material is specifically mentioned elsewhere or in the job specifications.

Closed cell Nitrile rubber/Polythene (CFC/HCFC free)

The thermal conductivity of the material shall not exceed 0.04 W/m deg. C. at 10 deg. C mean temperature and density should not be less than 60 kg/ m3. Thickness of the insulation shall be as specified below for the individual applications. The insulation material can be readymade pipe section or precut sheets.

Polyurethane Foam (PUF)

The thermal conductivity of the material shall not exceed 0.04 W/m deg. C. at 10 deg. C mean temperature and density should not be less than 40 kg/ m3. Thickness of the insulation shall be as specified below for the individual applications. The insulation material can be readymade pipe section or precut sheets as per application. The PUF shall be CFC/HCFC free.

Sl. No.	Surface Material	Insulation material	Type of Section	Thk. (mm)	Finish
1.	Chilled water piping (100 NB and less)	PUF	PIPE	50	Sand cement Plaster
		Closed cell Nitrile rubber/Polythene	Plain/Pipe section	25	Al cladding
2.	Chilled water pipe insulation (125 NB & above)	PUF	PIPE	75	Sand cement Plaster
		Closed cell Nitrile rubber/Polythene	Plain/Pipe section	31	Al cladding
3.	Chilled water pumps, valves,	PUF	PIPE	75	Sand cement Plaster

© 2022 MECON Limited All rights reserved

	flanges etc.	Closed cell Nitrile rubber/Polythene	Plain section	31	Al cladding
4.	Expansion tank	PUF	Plain section	50	Sand cement Plaster
		Closed cell Nitrile rubber/Polythene	Plain section	25	Al cladding
5.	AHU drain pipe	PUF	PIPE	25	Sand cement Plaster
		Closed cell Nitrile rubber/Polythene	Plain/Pipe section	19	Al cladding
6.	Acoustic insulation	Resin bonded glass wool board	Slab	12	Fiber glass tissue & perforated Al sheet 26G
7.	Under deck thermal insulation	PUF	Slab	50	--

Ducting :

Closed cell Nitrile rubber/Polythene

The air handling ducts shall be insulated with closed cell Nitrile rubber / Polythene with density 60±2 kg/m3. Duct insulation thickness shall be as follows :

AC Duct in conditioned space - 13 mm thickness
AC Duct in unconditioned space - 25 mm thickness

Cold adhesive or equivalent can be used for setting the insulation on the pipe/duct.

Resin bonded glass/mineral wool:

The air handling ducts shall be insulated with resin bonded glass/mineral wool with density not below 48 Kg/m^3 with polythene back hessian on outer side. Duct insulation thickness shall be as follows :

AC Duct in conditioned space - 25 mm thickness
AC Duct in unconditioned space - 50 mm thickness

Application Procedure (Resin bonded glass/mineral wool):

Clean the surface with wire brush to make it free from rust etc. Apply two coats of hot bitumen 85/25 to the surface @ 1.0 Kg/m^2 for first coat & in patches for second coat. Wrap the duct with insulation blankets of the specified thickness. Apply PBH layer on the outside and reinforce it by tying GI wire of 0.5 mm at interval of 450 mm.

Duct in outdoor areas exposed to weather shall be covered with 24 SWG Aluminum sheet bent true to shape and secured with self-tapping screws and over lapped joints sealed with Loidseal – 94.

Acoustic Lining :

© 2022 MECON Limited All rights reserved

The first 5 meter length of duct starting from each fan outlet shall be provided with insulation for acoustic purposes. The insulation material shall be as specified under "Insulation materials" above. Then it shall be covered with 0.56 mm perforated Aluminium sheets.

Application Procedure :

The duct surface shall first be cleaned from inside. The insulation boards shall be wrapped in Glass Cloth of 7 mil thick with ends stitched. The boards shall be fixed inside the duct. The insulation shall then be covered with 0.56 (24 SWG) perforated Aluminum sheets.

The sheet and the insulation, shall be secured to the duct by means of cadmium plated bolts, nuts and washers and the ends should be completely sealed off so that no insulation material is exposed.

Walls and Ceiling – Acoustic Treatment of equipment rooms :

Insulation material shall be resin bonded glass wool/mineral wool of density 48 Kg/m^3 of 50 mm thickness.

Application Procedure :

Fix 40 mm x 50 mm Deodar / Kail wood battens at 500 mm intervals longitudinally. Then fix cross battens at 1.0 meter C – C using suitable gutties and brass / SS Screws.

Fill each rectangle with 50 mm resin bonded glass/mineral wool wrapped in glass cloth. Then tie with 24 SWG GI wires at 300 mm intervals. Then cover with 24 SWG (0.56 mm) perforated Aluminum sheet having 3 mm perforations at 6 mm C – C. Overlap all the joints and provide beads of 25 mm by 1.5 mm MS flat.

Extent of Acoustic Treatment :

Walls : Two of the walls enclosing the room starting from 1 ft. above the floor up to the ceiling.

Ceiling : The entire ceiling covering the room.

Measurement :

The measurement of insulation of vessels, piping and ducts shall be made over the insulated surface area as per IS 14164: 1994 (RA 2001).

03. Data to be furnished by the Tenderer along with offer

1. Make & Type
2. Quantity
3. Density in kg/m^3
4. Thermal conductivity
5. Sound absorption co-efficient
6. Material of construction and its thickness

© 2022 MECON Limited All rights reserved

7. Application procedure reference standard.
8. Vapour barrier material
9. Fire resistance property
10. Cladding material

21.0 ES18 – INSULATION FOR HOT APPLICATION

01. General

This specification outlines the minimum requirement for design, engineering, selection, manufacture, test and supply of Insulation with all accessories for hot surface application. Specific technical requirement of Insulation if any, shall be mentioned in the job specification/data sheet as furnished along with the Technical Specification.

Brief description of the Insulation is given below under clause No. 02. The equipment-wise list of data to be furnished by the tenderer along with the offer is shown below under clause No. 03.

02. Description

02.1 General Requirements:

Thermal insulation shall be provided for all vessels, equipment, pipe fittings, heat exchangers etc. containing fluid or vapour for which it is necessary to (a) Conserve heat (b) Maintain temperature for process control (c) provide for personnel protection.

Thermal insulation system shall be selected so as not to result in a residual heat loss exceeding 150 Watts/m^2 under plant operating conditions measured over insulated surfaces. For design, the following data are specified:

Ambient air temperature	:	45°C (Max.)
Wind velocity	:	1 m/sec.
Surface temperature	:	Not to exceed 15°C above ambient

Design should include de-rating factors of direct conduction paths e.g. spacer rings and stitching wires normally associated with blanket type insulation material.

02.2 Reference Standards:

IS 8183: 1993 (RA 2004)	Specification for Bonded Mineral Wool, Group – III & IV
IS 9842: 1994 (RA 2006)	Specification for pre-formed Fibrous Pipe Insulation, Group– III
IS 737: 1986 (RA 2006)	Wrought aluminium and aluminium alloy sheet and strip for general engineering purposes
IS 14164 : 1994 (RA 2001)	Industrial application and finishing of thermal insulation material at temperature above -80 deg C

© 2022 MECON Limited All rights reserved

	and up to 700 deg C - Code of practice

02.3 Application procedure - Piping:

- For surface preparation wire brush shall be used to remove rust, dust or oil etc. thoroughly.

- Fix the pre-formed pipe-section insulation of required thickness against each diameter of pipe as per the thickness requirement for temperature class and pipe diameter. Construction (upto 75mm thick – 1 layer thereafter 2 or 3 multi layer) joints should be staggered so that complete breaks are minimum on single layer insulation and no through joints occur in multi layout work. The insulation must be held in position by strapping with 20mm x 24 SWG Aluminium Straps.

- When lightly bonded rock wool mattresses are used, they shall be wrapped around the pipes without any under layer. On top of each layer, the wire netting already on top of mattresses should be tightly butted against each other so that the fibers interlock both along the longitudinal and circumferential joints. The pipe joints shall be stitched with 22 SWG soft GI lacing wire for pipes upto 400mm O.D. For pipes over 400mm O.D., the mattresses should be further secured by strapping with 20 mm x 24 SWG Al. straps at 500mm intervals.

  All un-insulated flanges, pipeline insulation shall be stopped off at a suitable distance from the flange for facilitating withdrawal of bolts without disturbing insulation.

- When supporting insulation of vertical pipelines it is essential that all the pipe insulation (above 200 NB pipe) should be supported at minimum of 3.0 meters distance by applying insulation support spider clamps. These clamps are fitted around the pipeline bare surface with projecting legs whose length should not be more than 70% of insulation thickness.

- Flanges and Valves: Removable covers shall be provided over all flanges and valves whenever they are insulated with preformed materials. These covers over valves and flanges shall have provision for quick – release clips.

- Sheet Metal Cladding: All pipes shall be covered with Aluminum sheet (24 SWG/0.56mm upto 325mm O.D. inclusive of insulation thickness and 22 SWG/0.71mm beyond 325mm O.D.) conforming to IS 737: 1986 (RA 2006), to the outside of the insulation with minimum 25mm circumferential and longitudinal over laps. The overlapping should be grooved so as to prevent ingress of water into the insulation. In horizontal piping, joints shall be arranged at an angle of 30 to 40° from the horizontal so as to shed rain water.

  When lightly bonded rock wool mattresses have been used as the insulation material, spacer rings shall be required screwing the Aluminum sheet. The sheet metal shall be secured to themselves by self-tapping screws at a pitch not exceeding 150mm.

© 2022 MECON Limited All rights reserved

After securing the Aluminum sheet, the overlapped joints of the sheet metal shall be sealed with metal sealant to make joints perfectly waterproof.

02.4 Application Procedure – Vessels & Equipment:

- The surface to be insulated shall be thoroughly cleaned by wire brushing to remove dirt, loose scales, dust etc.
- Where welding is permissible, weld 10 SWG GI spokes at 300 – 400mm diamond pitch.
- 'L' shaped lugs to be fixed to the spacer rings made of 25mm x 3mm MS flats at 450mm C – C with 25mm x 25mm x 3mm asbestos mill board washers and 4mm MS rivets.
- The spacer rings shall be fixed around the tank at 900mm C – C by welding 'L' shaped lugs to tank body.
- Impale Rock wool lightly bonded machine stitched mattresses with one side wire netting of required density (upto 400° – 100 Kg/m^3, above 400^oC – 120 Kg/m^3) and thickness, with the ends of mattresses butted closely together with lacing wire of 22 SWG. In addition, mattresses shall be secured with tightly tensioned circumferential Aluminium bands at approx. 450mm pitch.
- The ends of GI spokes shall be bent on the insulation.
- The Aluminium metal cladding (22 SWG/0.71mm) is to be fixed on the spacer rings with self-tapping screws at 150mm C – C.
- All over lapped joints of Aluminum sheet metal shall be sealed with loidseal-94 to make joints waterproof.

02.5 Expansion Joints:

Expansion joints shall be provided in the insulation to allow for movement and expansion of the pipe or vessel without producing random cracks. At the expansion joints, there shall be complete cut and the cutout portion shall be 25mm wide and dry filled with loose insulation material the density of which shall be equal to that of the basic insulation. The expansion joints wherever necessary shall be installed by overlapping the cladding material.

Pipe temp. ^oC	Spacing of Expn. Joints in meters
Upto 200^oC	No Expn. Joint.
201 to 300^oC	3.5
301 to 400^oC	3.0
Above 400^oC	2.0

02.6 Design Criteria :

© 2022 MECON Limited All rights reserved

Ambient air temperature	35°C or 45°C
Design surface temperature	Not to exceed 15°C above ambient air temperature
Wind velocity	1 meter/second
Cladding over insulation	Aluminium (Emissivity : 0.2)
Insulation material	Rock wool density 144 Kg/m^3 upto 350 mm NB, Rock wool mattresses above 350mm NB pipes density 100 Kg/m^3 upto 400°C and 150 Kg./m^3 above 400°C

02.7 General Guidelines for insulation thickness :

Temperature: 500°C	100°C	200°C	300°C	400°C
Pipe NB		Thickness of Insulation		
100	25	40	70	100
140				
200	25	45	80	115
160				
300	25	45	85	125
170				
400	25	55	95	145
190				
500	25	55	95	150
195				
600	25	55	100	150
200				
Flat	25	60	115	140
255				

Note: For piping upto 325 mm OD (including insulation thickness) aluminum sheet thickness – 24 SWG (0.56mm) and beyond 325 mm OD (including insulation thickness) aluminum sheet thickness – 22 SWG (0.71mm).

03. Data to be furnished by the Tenderer along with offer

1. Make & Type
2. Quantity
3. Density in kg/m³
4. Thermal conductivity
5. Material of construction and its thickness
6. Application procedure reference standard.
7. Vapour barrier material
8. Fire resistance property
9. Cladding material

© 2022 MECON Limited All rights reserved

22.0 ES19 – PACKAGED AIR CONDITIONER

01. General

This specification outlines the minimum requirement for design, engineering, selection, manufacture, test and supply of Packaged Air Conditioner with all accessories to make operation of Packaged Air Conditioner complete in all respects. Specific technical requirement of Packaged Air Conditioner if any, shall be mentioned in the job specification/data sheet as furnished along with the Technical Specification.

Brief description of the Package Air Conditioner is given below under clause No. 02. The equipment-wise list of data to be furnished by the tenderer along with the offer is shown below under clause No. 03.

02. Description

Each package air-conditioner will essentially comprise of compressor, cooling coil, refrigerant circuit, condenser, blowers, air filter, electric drives, instruments and controls and other standard accessories assembled in steel cabinet. The air-conditioner will be designed for continuous duty and mean time between failures will be considered minimum 2 years. The equipment shall be designed, manufactured and tested as per IS 8148 : 2003. All electrical connections shall be built in, Purchaser will provide the power supply load.

The compressor will be semi-hermetically/ hermetically sealed, mounted on anti-vibration pads & dynamically balanced.

The condenser will be water cooled shell and tube type with effective surface area for heat transfer taking into consideration the scale factor of 0.0006 for water side and optimum number of passes to achieve desired duty conditions. Provision will be made in the steel cabinet for tube side cleaning during maintenance. The condenser will also serve as refrigerant receiver of refrigerant circuit with fusible relief plug.

Alternatively as per job specification requirement condenser may be air cooled with fins and tube type with effective heat transfer area taking into consideration high ambient temperature of site selected. A refrigerant receiver shall be provided in the refrigerant circuit. Air cooled condenser along with the fan shall be installed in the free area for movement of outside air through condenser tube for effective cooling of refrigerant.

Cooling coil will be direct expansion type with integrally finned copper tubes and fitted with equalizing distributors to ensure equal amount of refrigerant in each circuit. Condensate drip pan will be provided below the cooling coil for collecting the condensate.

The refrigerant circuit will be completely piped at factory and charged with required amount of refrigerant. The circuit will comprise of thermostatic expansion valve, distributor, liquid strainer, liquid line shut off valve, dehydrator etc. The circuit will be protected with safety devices such as high and low pressure cutouts, fusible plug, water flow/differential pressure switch, oil safety switch, time delay relay etc. to

© 2022 MECON Limited All rights reserved

protect the unit from damage due to sudden and serious fluctuations in operating conditions. The refrigerant will be R22 / R134a/ R407c/ R123.
For control of temperature and humidity of the conditioned premises, thermostat and humidistat will be provided in the package A.C. plant room as per job specification requirement.

The centrifugal blower will be designed for distribution of the conditioned air through the network of duct and supply air diffusers. The impeller will be of forward curved, dynamically balanced for low noise and vibration free operation. The fan will be coupled with motor by V-belt and mounted on anti vibration mounting.

The necessary control and instruments include thermostatic expansion valve, sight glass, strainer, cooling thermostat, heating thermostat, humidistat, strip heater, shut off purge valve and drain valve, dial type pressure and temperature gauges etc. Cooling thermostat and humidistat will be provided in the return air circuit (in A.C. plant room) as per job specification requirement.

Dial type 150mm dia pressure gauge will be provided with isolating cocks/ valves. Flow switch / water differential pressure switch will be installed in condenser water inlet line to stop the compressor when water supply stops. High efficiency filter & strip heater will be installed in the supply air duct at the discharge end of packaged unit and the strip heater will be interlocked with the blower of the packaged unit to prevent independent control/ switching of heaters as per job specification requirement.

The blower and the evaporative coil sections of the packaged unit will be thermally insulated to minimize thermal leakage. The unit will be supplied with rubber pad for installation on PCC pedestals.

Circulating condenser water cooling pipeline will be provided with strainer and by pass line.

03. Data to be furnished by the Tenderer along with offer

Make & Model
Quantity
Capacity in TR
Overall dimension of Packaged AC Unit
Air flow capacity of blower m^3/h
Total Pressure, mmWC
Fan Motor kW
Fan RPM
Compressor type, model
Compressor motor kW
Refrigerant type
Condenser type
Condenser material of construction
Overall size of condenser
Material of construction and its thickness of casing
Insulating material of casing
Total Power consumption.

© 2022 MECON Limited All rights reserved

Noise level at 1m distance in dB(A)
Vibration isolation pad
Performance curve.
Fixing details.
Refrigerant drier and strainer

© 2022 MECON Limited All rights reserved

23.0 ES20 – PROPELLER FAN

01. General

This specification outlines the minimum requirement for design, engineering, selection, manufacture, test and supply of Propeller Fan with all accessories to make operation of Propeller Fan complete in all respects. Specific technical requirement of Propeller Fan if any shall be mentioned in the job specification/data sheet as furnished along with the Technical Specification.

Brief description of the Propeller Fan is given below under clause No. 02. The equipment-wise list of data to be furnished by the tenderer along with the offer is shown below under clause No. 03.

02. Description

Propeller type axial flow fanis used for general air exchange of the served premises. The fan shall be heavy duty and wall mounted type propeller fan design and shall conform to IS 2312: 1967 (RA 2000). Fan impeller blade shall be of aerofoil section and mounted directly at the motor shaft. The RPM of the fan preferably shall be restricted to 900 RPM and should always be less than 1500 RPM. Noise level should not exceed 85 dB(A) at 1 m distance. Air entry shall be from motor side. Louver shutter/non-return damper shall be provided at the outlet side of fan to prevent back draft. The fan shall be provided with fixing frame, supporting lugs and other standard accessories.

03. Data to be furnished by the Tenderer along with offer

1. Make & Model
2. Capacity in m^3/hr
3. Quantity
4. Material of construction
5. Total pressure in kgf/m^2
6. Characteristic curve
7. Speed in RPM
8. Size of fan
9. Drive details (kW & power supply)
10. Efficiency
11. Fixing details
12. Weight of fan & motor
13. Performance curve
14. Details of non-return damper/louver shutter
15. Fixing frame

© 2022 MECON Limited All rights reserved

24.0 ES21 – SCRUBBER DUST EXTRACTION SYSTEMS

01. General

This specification outlines the minimum requirement for design, engineering, selection, manufacture, test and supply/fabrication of Centrifugal / Venturi Scrubber System with all accessories required to be installed for dust extraction application to achieve desired performance in all respects. Specific technical requirement of Centrifugal / Venturi Scrubber System if any shall be mentioned in the job specification/data sheet as furnished along with the Technical Specification.

Brief description of Centrifugal / Venturi Scrubber is given below under clause No. 02. The point wise list of data to be furnished by the tenderer along with the offer is mentioned below under clause No. 03.

02. Description

02.1 Centrifugal scrubber

Centrifugal scrubber is essentially a vertical steel cylinder with conical bottom. Casing and bottom are made of heavy gauge sheet steel. The top of the casing is connected to exhaust fan and conical portion of the casing is provided with a hydraulic seal. The rectangular inlet of the scrubber is welded to the casing tangentially with respect to its inside surface and with a slant of 10°C toward casing. Dust deposited on the walls of the inlet duct is washed by water sprayers.

The inside surface of the casing is continuously sprayed by sprayers. The water jet emerges from sprayers in the same direction as the swirling air, and at the same time, tangentially to the inside surface of the casing and thus washes it without producing any droplets. The operation of nozzles is checked through inspection holes located just above them.

Dust laden air enters the bottom cylindrical part of the scrubber casing through inlet duct at an approximate velocity of 20 m/sec. As it enters the scrubber, a portion of the stream is directed upwards along a helical line, following closely the inside surface of the casing. The remaining stream revolves and descends, rebounds from the scrubber bottom and rises along a helical line but closer to cyclone axis. Both streams merge at the outlet.

A centrifugal force arising on rotation of the air stream ejects dust particles towards the sprayed surface of the scrubber. The majority of the particles reaches the film of water and are captured by it.

Water containing captured dust particles trickles down the casing wall and is removed via the hydraulic seal. The protective baffle provided above the sprayers is intended to minimize entertainment of droplets. The mean air velocity for the full cross section of the cylindrical portion of the scrubber is taken to be 5.5 m/s.

The efficiency of the scrubber should be sufficiently high so that the dust concentration in the exhaust ducting shall not exceed 50 mg/Nm³.

© 2022 MECON Limited All rights reserved

02.2 Venturi Scrubber

The venturi scrubber consists of high speed atomizer and centrifugal separator. High speed atomizer consists of converging cone, throat and diverging cone. Air stream is accelerated in converging cone and the velocity of the stream rises. Water is introduced at the throat, where it is atomised due to high pressure.

Dust laden air and water enter the throat, where they are mixed at high energy and extreme turbulence. The throat with its length provides an extended period of thorough mixing. The scrubbed air and entrained droplets (with contaminants entrapped) then enters the diverging cone where further collisions and agglomeration takes place creating larger droplets. The air stream then proceeds to centrifugal separator where liquid droplets due to their coarse size are easily removed from the air stream. The working of the centrifugal separator is similar to that of centrifugal scrubber except that the water sprayers are not required.

The efficiency of the venturi scrubber shall be sufficiently high so that the dust concentration in the chimney does not exceed 50 mg/Nm^3 or as per job specification requirement.

03. Data to be furnished by the Tenderer along with offer

a) Centrifugal Scrubber

Make & Model.
Capacity in m^3/h.
Pressure drop in mmWC.
Overall size of centrifugal scrubber
Air velocity through scrubber body in m/sec.
Water quantity and pressure required for scrubbing
Spray nozzle quantity, diameter and material of construction
Material of construction of scrubber body
Cleaning efficiency Vs particle size
Water sealing arrangement at bottom of scrubber
Methods of slurry disposal.
Supporting frame details.
Total weight of scrubber

b) Venturi Scrubber

Make & Model
Capacity in m^3/h.
Pressure drop in mmWC.
Overall size of venturi scrubber and centrifugal collector
Air velocity at inlet, throat & outlet of scrubber in m/sec.
Water quantity and pressure required for scrubbing at throat & slurry disposal at centrifugal collector
Spray nozzle quantity, diameter and material of construction
Material of construction of scrubber body
Material construction of throat
Cleaning efficiency Vs particle size
Water sealing arrangement at bottom of centrifugal collector

© 2022 MECON Limited All rights reserved

Methods of slurry disposal.
Supporting frame details.
Total weight of venturi scrubber

© 2022 MECON Limited All rights reserved

25.0 ES22 – STACK

01. General

This specification outlines the minimum requirement for design, engineering, selection, manufacture, test and supply/fabrication of Stack with all accessories required to be installed for exhaust of air to achieve desired performance in all respects. Specific technical requirement of Stack if any shall be mentioned in the job specification/data sheet as furnished along with the Technical Specification.

Brief description of Stack is given below under clause No. 02. The point wise list of data to be furnished by the tenderer along with the offer is mentioned below under clause No. 03.

02. Description

1. Construction

Self-supported stack made of M.S. Plates (IS 2062 : 2006) shall be provided to discharge the cleaned air to atmosphere. The height of the stack shall be 2 to 3m above the nearest highest building or minimum 45m. Higher stack heights will be required for high volume applications like secondary dedusting system of BOF, sinter waste gas cleaning, etc. or as specified in the job specifications. Stack shall be fabricated as per IS 6533 : Part 1 : 1989 (RA 2006) for design and construction of steel chimneys - Mechanical aspects & IS 6533 : Part 2 :1989 (RA 1998) for design and construction of steel chimneys - Structural aspects.

2. Lightning Protection

Protection against lightning shall be made in accordance with IS 2309:1989 (RA 2005). Lightning Protection shall be provided by creating a path of minimum electrical impedance from the stack top to an earthing strip on the ground. At about 1500 mm from the stack top, a circumferential conductor (coronal band) shall be provided which is lead-covered, stranded and of tinned copper. This is connected to air-terminal rods (which shall project about 750 mm above the top of the earthing strip. During construction, temporary lightning protection shall be provided and this should be in the form of a single conductor connected to a temporary air-terminal at the top and to the earthing system on the ground. Vertical reinforcing bars near the stack base shall be electrically connected to a down conductor. Similarly all steel parts and footing reinforcement should be connected to a down conductor. At the top of the stack the lightning conductors shall be adequately protected from chemical corrosion by applying a lead coating or by other suitable means.

3. Aviation Warning Lights

Aviation warning lights shall be provided even during construction once the stack reaches a height of about 40m above ground. Both temporary as well as permanent provisions shall be of neon type. These lights shall have sufficient intensity (about 100 lux) so that they are conspicuous considering the back-ground illumination level against which they are viewed. Day marking shall be provided by painting the stack

© 2022 MECON Limited All rights reserved

in contrast colour bands for at least the top one-third of its height. Such bands shall range from 0.75 to 3 m in width with the outer bands in darker colour. The paint used for the bands shall be acid-resistant and shall safely withstand the temperature of the gases handled.

4. Staircase

The stack shall be provided with staircase, landing / resting platform at every 10m, handrails, painter's trolley, structures etc. Ring platform around stack shall be provided at location of aviation lamps.

5. Clean-out and Access Door

A suitable access door shall be provided at the bottom of the stack.

6. Sampling Ports

The sampling ports shall be provided as per Emission Regulation Part-III or its latest amendments. A single phase, 15A power point shall be provided near the ports for operating the stack monitoring kit.

7. Partition plates

When bottom of the stack is used as a suction chamber for fans, vertical and horizontal partition plates shall be provided to isolate the suction chamber and to ensure equal distribution of air to multiple fans. Similarly, partition plates shall also be provided in the discharge chamber of the stack to avoid turbulence from multiple discharges. The no. of such partition plates shall depend on the no. of ID fans. Suitable stiffeners shall be provided for these partition plates in stack.

8. Work Platform

a) Construction
Size and extent of platform : If two ports are required at 90 degrees, the work platform should serve that half of the stack circumference between the ports and extend at least 1.2 meters beyond each port. If four ports are required at 90 degrees, the work platform should serve the entire circumference of the stack. The minimum platform width shall always be 1.2 meters regardless of diameter of stack and number of sampling ports.

b) Platform Access
Safe and easy access to the platform shall be provided via stairway or other suitable means. A safe guard rail should be provided on the platform. Angular rather than round rails members should be used, wherever possible. No stairwell or any other opening shall be located within 1 meter of any port.

c) Platform loading
The work platform should be able to support atleast three men (average 80 kg each) and 91 kg of test equipment (stack monitoring kit etc.). If the

© 2022 MECON Limited All rights reserved

stack exists through a building roof, the roof may suffice as the work platform, provided the minimum test site conditions are still met.

d) Clearance Zone

A three dimensional, obstruction free clearance zone should be provided around each port. The zone should extend 0.6 m above, below, to either side of the port. The zone should extend outward from the exterior wall of the stack to a distance of at least 3 meters.

03. Data to be furnished by the Tenderer along with offer:

a) Diameter in mm
b) Material & thickness
c) Height in m
d) Level of sampling port holes
e) Level of platforms
f) Support & structure with stairs
g) Weather Cowl / telescopic duct connection

© 2022 MECON Limited All rights reserved

26.0 ES23 – TUBE AXIAL FLOW FAN

01. General

This specification outlines the minimum requirement for design, engineering, selection, manufacture, test and supply of Tube Axial Flow Fan with all accessories to make operation of Tube Axial Flow Fan complete in all respects. Specific technical requirement of Axial Flow Fan if any shall be mentioned in the job specification/data sheet as furnished along with the Technical Specification.

Brief description of the Tube Axial Flow Fan is given below under clause No. 02. The equipment-wise list of data to be furnished by the tenderer along with the offer is shown below under clause No. 03.

02. Description

Tube axial flow fans shall be of heavy duty type and of four kinds, as per service requirement, as follows: a) Roof exhauster, b) Roof mounted supply air fan, c) Wall exhauster, d) wall mounted supply air fan.

Axial fan design shall confirm to IS 3588: 1987(RA 1999).

The roof exhauster / roof mounted supply air fan shall have multi-bladed impeller with short duct casing while the wall exhauster/ wall mounted supply air fan shall have cone inlet suitable for free discharge of air. The fans shall be capable of withstanding the stresses which may be experienced during normal operation under the condition which it is required for and during over speed test. The noise level shall not exceed 85dB(A) at 1m distance.

The first critical speed of the rotating assembly shall be at least 25% above the operating speed. The speed of the fan shall preferably be limited to 1500RPM for fan with diameter 600mm or less and 960RPM for fans with diameter more than 600mm to limit the noise generation.

Impeller:
The impeller shall be of cast aluminium alloy construction of high efficiency aerofoil section blades. The fan impellers shall be cast in one piece, finished all over and carefully balanced both statically and dynamically as per ISO - 1940. Finally the assembled rotor shall be dynamically balanced.

Casing:
Axial flow fan casings for wall mounted/roof mounted fans and their components shall be suitable for outdoor installation. The casing shall be minimum 2 mm thick. The casings shall be provided with flanges at inlet and outlet. All nuts & bolts associated with it shall be of zinc or cadmium plated. Easily removable inspection cover having galvanised fly nut shall be provided. The covers shall be located such that the grease nipple for all bearings, and also motor terminals are easily accessible through the cover.

Hood and Cowl
Roof exhauster/supply air fans shall be provided with hood for protection against

© 2022 MECON Limited All rights reserved

rain and other contingencies. It must ensure no dripping of rain water under any circumstances and will have low pressure drop of air. The hoods shall be provided with a heavy gauge expanded metal bird screen.

Rain protection cowls shall be designed to suit wall exhausters for protecting fans from rain. The cowls shall be provided with bird screen of heavy gauge expanded metal netting. The rain protection hood & cowl shall be fabricated from minimum 14G thick MS sheet (Hot dip galvanised).

Coned Inlet

Wall exhausters shall be provided with coned inlet made of MS 2 mm thick or 16G, GI sheet.

Inlet Screen

Inlet screen shall be manufactured with minimum 14 SWG galvanised wire knitted in 25 mm square mesh. Suitable flanges to protect the edges of the screen shall be provided.

Fans for Special Applications

These fans & motors when used in explosive / inflammable fume extraction system shall be of spark proof construction. Fan impeller and inside surface of the casing shall be epoxy painted. In case of exposure to acid fumes, the fan along with drive motor, accessories & supports etc. shall have acid proof painting.

Fan Drive

All direct drive axial flow fan impellers shall be directly mounted on extended motor shafts. Alternatively as per job specification requirement bifurcated type V-belt drive may be considered. Flame proof motors shall be provided in explosive / inflammable zones.

Materials of Construction

a)	Impeller	:	Cast Aluminium Alloy
b)	Shaft	:	EN-8 as per BS-900 or its equivalent
c)	Fan Scroll	:	Heavy gauge M.S.
d)	Fan Supports, Frames	:	M.S.
e)	Coned inlet	:	M.S. 2mm thick
f)	Dampers	:	M.S. of heavy gauge
g)	Connection pieces	:	Galvanised M.S.
h)	Bolts and Nuts	:	Galvanised M.S.
i)	Rain protection cowls, hoods and casing	:	GI sheet

03. Data to be furnished by the Tenderer along with offer

Make & Model

© 2022 MECON Limited All rights reserved

Quantity
Capacity in m^3/h.
Total Pressure, mmWC
Material of construction and its thickness
Speed in RPM.
Drive details like make, kW rating, type, insulation & protection class etc.
Shaft Power consumption.
Wheel diameter.
Efficiency.
Size of fan
Static & Dynamic weight of fan & motor assembly
Critical speed of fan
Noise level at 1m distance in dB(A)
Performance curve.
Air flow direction.
Fixing details.
Vibration level.

© 2022 MECON Limited All rights reserved

27.0 ES24 – WATER LINE VALVES

01. General

This specification outlines the minimum requirement for design, engineering, selection, manufacture, test and supply/fabrication of Valves with all accessories required to be installed for HVAC systems & Air pollution control systems to achieve desired performance in all respects. Specific technical requirement of Valves if any shall be mentioned in the job specification/data sheet as furnished along with the Technical Specification.

Brief description of Valves is given below under clause No. 02. The point wise list of data to be furnished by the tenderer along with the offer is mentioned below under clause No. 03.

02. Description

Depending on the layout, the Tenderer will provide valves wherever required for HVAC & Air pollution control systems.

All valves shall conform to applicable Indian Standards.

All flanged valves and pipe fittings will be supplied with matching flanges, bolts, nuts and gaskets.

All valves will be suitable for required working pressure of the system served.

Pot strainers will be provided in the condenser water supply / inlet line, washed air systems, etc. Y-strainers may be provided only in vertical lines. Bypass line with valves will be included to facilitate cleaning the strainer without affecting the functioning of the unit.

Gate / Butterfly valves will be provided at pump outlets, inlets & at tank outlets. Non return valves shall be provided at pump outlets.

For dust suppression systems, pressure relief valves shall be provided at pump outlet to divert water back to the tank in case downstream usage of water is reduced. Butterfly valves shall be provided in branch headers to operate a particular group of sprinklers. Globe valves shall be provided on sprinkler headers to control the flow through each sprinkler.

Butterfly valve

Butterfly Valves shall be provided in water line of size 65 NB and above and ball valve be provided for pipe size below 65 NB

Type :	Wafer design
Body :	SG iron with nitrile rubber/ EPDM lining
Disc :	SG Iron with teflon (PTFE) coating
Stem :	High tensile stainless steel

© 2022 MECON Limited All rights reserved

The valves shall be provided with integrally moulded & bonded body liner to provide perfect seating and complete isolation of body material from fluid. The body liner shall provide the seating to valve disc, primary seal to the stem & gasket joint with matching pipe flanges. Valves shall be provided with self locking lever operation from open to fully closed position with intermediate positions marked on the indicator plate mounted on the top flange. The valves shall conform to BS 5155 / IS 13095: 1991, RA 2003. Extended valve shaft shall be provided so that the lever can be operated without any obstruction on the insulated pipes. Gear operated valves shall be provided for sizes more than 150 NB.

Ball Valve

Body : Cast steel
Body liner : Nitrile rubber/ EPDM
Ball : ASTM A351 Gr CF8

The ball valve shall be of 3 piece design, socket welded type and be supplied with 200mm length of pipe on both sides

Gate Valve

1.	Type	Gate valve with non-rising spindle & bolted bonnet
2.	Body	Below 50 mm Bronze. 50mm & above Cast iron as per IS: 210-1993 (RA 1999),GR.200
3.	Bonnet	Bolted
4.	Spindle	SS as per AISI 410
5.	Disc	Cast iron as per IS:210-1993 (RA 1999),GR 200
6.	Body seat ring & Disc facing ring	SS as per AISI 410
7.	End connections	Below 50 mm - Screwed. 50 mm & above flanged end, to be drilled as per ANSI B.16.5
8.	Pressure rating	As per system requirement
9.	Flange facing	Flat Face
10.	Manufacturing std.	IS:778, 1984, RA 2007
11.	Bolts & nuts	Black Hexagonal bolt with nut as per ASTMA 307 Gr B.
12.	Gaskets	Compressed Asbestos Fibers to IS 2712: 1998 (RA 1999), 1.5 mm thick
13.	Hand wheel	CI Gr 200 as per IS : 210 – 1993 (RA 1999)
14.	Packing	Asbestos
15.	Companion Flanges	ANSI B16.5 Class 150
16.	Hydrostatic testing	As per relevant IS & Pressure rating of PN 1.6
17.	Test certificates	For Physical/chemical analysis & metallurgical tests for body parts , Hydro testing
18.	Service	Re-circulation water/ Make up water/chilled water

Globe Valves

1.	Type	Globe valve for water supply pipelines

© 2022 MECON Limited All rights reserved

2.	Body/Bonnet	Bronze As per IS 318: 1981 (RA 2001) Gr 2
3.	Stem	Brass as per FHTB 1 of IS 6912: 2005
4.	Hand wheel	CI FG 200 as per IS : 210 – 1993 (RA 1999)
5.	Gland, Gland nut, spindle nut	As per IS 318 (RA 2001) Gr 2
6.	Gland Packing	Asbestos
7.	Pressure rating	As per system requirement
8.	Manufacturing std.	IS : 778 : 1984 (RA 2007)
9.	Max. Optg. temp	50 ^{0} C
10.	Operation	Manually operated hand wheel with open and close direction indication.
11.	End connection	Screwed as per IS-554 upto 40 mm unless otherwise mentioned in job specifications. Flanged end for 50 mm and above.
12.	Special features	1) Arrow indicating flow direction 2) Embossed nameplate-giving details of tag nos., type and size.
13.	Service	Re-circulation water/ Make up water/chilled water
14.	Hydrostatic Testing	As per relevant IS and pressure rating of PN 1.6

Non return valves

1.	Type	Dual plate check valve with two springs hinged on a central hinge rod / Swing check type
2.	Body	SG iron / Cast iron as per IS: 210-1993 (RA 1999), GR. 200.
3.	Body liner	Nitrile rubber/ EPDM
4.	Cover	SG iron / Cast iron as per IS: 210-1993 (RA 1999), GR. 200.
5.	Hinge	Cast iron as per IS: 210-1993 (RA 1999), GR.220.
6.	Hinge pin	HT brass IS 320: 1980 (RA 2006) HT-2
7.	Body Seat Ring & Disc ring	IS 318: 1981 (RA 2001) Gr 2
8.	Disc	ASTM A351 Gr CF8 / CI as per IS: 210-1993 (RA 1999), Gr.200
9.	Gasket	CAF gasket as per IS 2712: 1998 (RA 1999) of thickness 1.5 mm
10.	End connections	Flanged end, drilling as per ANSI B16.5
11.	Pressure rating	As per system requirement
12.	Manufacturing Std	IS:5312(Part-1)-2004 / BS-5153 1991
13.	Bolts & Nuts	Hexagonal type as per IS:1367-1967 Cl.-4.614.4
14.	Companion Flanges	ANSI B 16.5 class 150
15.	Hydro static testing	As per IS : 5312 Part-1 -2004 / BS 5153 (1991) and pressure rating of PN-1.6
16.	Test certificates	For Physical/chemical analysis & metallurgical tests for body parts , Hydro testing
17.	Service	Water / chilled water

© 2022 MECON Limited All rights reserved

03. Data to be furnished by the Tenderer along with offer

Make & Model -
Type -
Quantity -
Size -
Pressure rating -
Material of construction -
Operating system -
Drive details. -
Gland packing -
End connections -
Service -
Test pressure -

© 2022 MECON Limited All rights reserved

28.0 ES25 - WINDOW / SPLIT / DUCTABLE SPLIT TYPE AIR CONDITIONER

01. General

This specification outlines the minimum requirement for design, engineering, selection, manufacture, test and supply of Window Type Air Conditioner / Ductable type split air conditioner /Split Type Air Conditioner with all accessories to make operation of Air Conditioners complete in all respects. Specific technical requirement of Air Conditioners if any, shall be mentioned in the job specification / data sheet as furnished along with the Technical Specification.

Brief description of the Air Conditioners is given below under clause No. 02. The equipment-wise list of data to be furnished by the tenderer along with the offer is shown below under clause No. 03.

02. Description

1. Window Type Air Conditioners

Window air conditioners shall comprise of hermetically sealed compressors, air cooled condenser, refrigerant piping, blower, instruments and controls, supply air grill with direction deflector etc. enclosed in a insulated steel cabinet. 3 meter long power cable along with plug and socket unit shall be provided for each air conditioner. Necessary installation fittings like condensate drain pan and fixing attachments shall be provided by the successful tenderer. Any additional services required shall be included in line with job specification requirement. Window air conditioner unit shall conform to IS 1391 : Part 1 : 1992 (RA 1999).

2. Ductable Split Type Air Conditioner

Air cooled Ductable Split Air Conditioners shall comprise of ceiling suspended ductable Indoor Unit and Outdoor Unit with Hermetically Sealed Scroll Compressors. Nominal Evaporator Air quantity should be 400 CFM / TR. The Indoor Unit should have air duct outlet at the front. The Ductable Split Air Conditioners shall be suitable for operation on 415 V +/- 10%, 3 Phase, 4 Wire, 50 Hz electrical power supply. The ductable split type air conditioners shall be complete including refrigerant piping, valves, accessories, power & control cables and insulated drain piping.

The Outdoor Units shall be located outside the air-conditioned space and shall be interconnected through hard drawn copper refrigerant pipes to the indoor unit located inside the air-conditioned space with Liquid Line & Suction line.

The Outdoor Unit shall be Air cooled Condensing Unit. The Condensers shall have suitable diameter copper tubing with extended aluminum fins. The tube shall be arranged in a staggered fashion for better efficiency. Ambient air will be used for cooling of refrigerant in the copper tubes. The air will be sucked by one or more propeller type direct driven fan. The fan shall be adequately sized for circulating enough quantity of air from ambient for giving the rated output. The fan shall be of

© 2022 MECON Limited All rights reserved

speed less than 1000 RPM so that the noise level of the equipment is low. The casing shall be made from corrosion resistant 0.9 mm (min.) galvanized steel sheet with polyester powder coating to withstand the effect of nature.

The Indoor Unit shall have necessary number rows of Cooling Coil of copper tubing with extended aluminum fins for higher heat transmission efficiency. The fins shall be bonded on to the tube by hydraulic expansion of copper tubing. The Cooling Coil shall be designed in a staggered manner for maximum contact between air and tube surface with low bypass. The cooling circuits are fed with liquid refrigerant through Thermostatic Expansion Valve and liquid distributor. The surface area of the cooling coil shall be adequate to give required refrigeration capacity.

Scroll Compressors in each Outdoor Unit shall be mounted on rubber grommets with metal sleeves so that no vibration is transmitted to the body of the Outdoor Units or to its base. The Compressor shall be Hermetically Sealed Scroll Type Compressor.

The air circulation from the indoor unit shall be maintained through centrifugal forward curved DIDW fans, statically and dynamically balanced to give sufficient static pressure and the required air quantity of not less than 400 CFM/ TR.

The blower fan shall be selected for minimum three-speed operation with a maximum speed upto 1000 RPM.

The Indoor Unit shall have washable non-woven polyester media enclosed by HDPE mesh Air Prefilter. The filter shall be mounted in a filter frame so that it is held in position during operation of the unit. The casing of Indoor Unit shall be made from corrosion resistant 1.6 mm (min.) galvanized steel sheet on the side panels and 0.9 mm (min.) galvanized steel sheet for front, back and top panel with polyester powder coating. The supply air side of the Indoor Unit shall be insulated with 12 mm Fiberglass bonded by non-water soluble fire retardant thermosetting resin.

The Split type Air Conditioners shall be accompanied with remote micro-controller having the following features :

(i) Two Speed Selection

(ii) Automatic Selection of Compressor to ensure energy efficiency.

(iii) Run time equalization between Compressors

(iv) Accurate temperature sensing through Electronic Thermostat.

(v) Memory backup in case of power failure

(vi) Digital control of temperature.

(vii) Auto restart after power failure.

(viii) Built in time delay protecting compressors from instant Stop / Start.

(ix) Single and Reverse Phase protection.

(x) Fault diagnostics, facilitating safety trips and fast corrective action.

© 2022 MECON Limited All rights reserved

The Unit shall have type accessories like HP/LP Cutout for safety protection of the Compressor, liquid line valve and catch all dryers.

3. Split Type Air Conditioner

Split air conditioning unit shall comprise of two sections - Indoor and Outdoor. Indoor section shall comprise of cooling coil, fan, supply air grill, filter. Outdoor section shall comprise of air cooled condenser, condensing fan, hermetically sealed compressor. Sealed refrigerant piping shall inter connect indoor and outdoor sections. Outdoor unit shall be installed in open space for easy heat dissipation from condenser. Indoor section shall be ceiling suspended or wall mounted type as per job specification requirement. Remote control unit, thermostat and other standard accessories for successful installation of split type air conditioner shall be included in the scope of successful tenderer. Any additional services as required, shall be included in line with job specification requirement. Split air conditioner unit shall conform to IS 1391 : Part 2 : 1992 (RA 1999).

03. Data to be furnished by the Tenderer along with offer

Make & Model
Quantity
Capacity in TR
Air Flow m^3/h
Flow direction and volume control grill
Material of construction
Compressor type
Drive details and total power consumption
Overall dimensions
Refrigerant type
Filter efficiency
Weight of unit
Noise level at 1m distance in dB(A)
Fixing details.
Vibration level.
Accessories included

© 2022 MECON Limited All rights reserved

29.0 ABBREVIATION

Sl. No.	Abbreviation	Description
1.	VAM	Vapor Absorption Machine
2.	A/C	Air Conditioning
3.	HVAC	Heating, Ventilation & Air Conditioning
4.	ISHARE	Indian Society of Heating and Refrigeration Engineers
5.	DBT	Dry Bulb Temperature
6.	RH	Relative Humidity
7.	RPM	Revolutions per Minute
8.	AHU	Air Handling Unit
9.	SWG	Standard Wire Gauge
10.	MS	Mild Steel
11.	NB	Nominal Bore
12.	RA	Re-Affirmed
13.	HP/ LP	High Pressure / Low Pressure
14.	SPM	Suspended Particulate Matter
15.	RPM	Respirable Particulate Matter
16.	DE SYSTEMS	Dedusting Systems
17.	ACGIH	American Conference of Governmental Industrial Hygienists
18.	CPCB	Central Pollution Control Board
19.	HRC	Hardness measured on Rockwell Scale
20.	IS	Indian Standard
21.	BHN	Brinell Harness Number (Hardness measured on Brinell Scale)
22.	ESP	Electrostatic Precipitator
23.	RAV	Rotary Air Lock Valve
24.	RAL Valve	Rotary Air Lock Valve
25.	DFDS	Dry Fog / Dual Fluid Dust Suppression System
26.	AISI	American Iron and Steel Institute
27.	SS	Stainless Steel
28.	DS	Dust Suppression
29.	P & ID	Piping and Instrumentation Diagram
30.	PVC	Polyvinyl chloride
31.	FCU	Fan coil unit
32.	PUF	Polyurethane Foam
33.	EU-3	Europa Universalis III
34.	G.I.	Galvanized Iron

© 2022 MECON Limited All rights reserved

Sl. No.	Abbreviation	Description
35.	ISO	International Organization For Standardization
36.	S / AIR DUCT	Supply air duct
37.	ADP	Apparatus Dew Point
38.	HDPE	High Density Polyethylene
39.	GSS	Galvanised Sheet Steel
40.	DIDW Fan	Double Inlet Double Width Fan
41.	AMCA	Air Movement and Control Association
42.	TIG	Tungsten inert gas
43.	MOC	Material of Construction
44.	PTFE	Polytetrafluoroethylene
45.	CRCA	Cold Rolled Closed Annealed
46.	MCB	Miniature **Circuit** Breaker
47.	HRC	High rupture capacity
48.	LED	Light emitting diode
49.	DP Switch	Differential Pressure Switch
50.	VIV	Variable inlet vanes
51.	RTD	Resistance temperature detector
52.	H-Q characteristics	Enthalpy -Flow characteristics
53.	NPSH	Net Positive Suction Head
54.	ANSI	American National Standards Institute
55.	CAF	Compressed Asbestos Fibre
56.	HTG	High Temperature Generator
57.	RCC	Reinforced Cement Concrete
58.	PRDS	Pressure Reducing and De-superheating Station
59.	IBR	Indian Boiler Regulations
60.	GA	General arrangement
61.	TR	Tones of refrigeration
62.	LTG	Low Temperature Generator
63.	DX	Direct expansion type
64.	ARI	Air-Conditioning and Refrigeration Institute
65.	FRP	Fiberglass Reinforced Plastic
66.	TEFC	Totally Enclosed Fan Cooled
67.	CR Sheets	Cold Rolled Sheets
68.	SCA	Specific Collection Area
69.	CFC/HCFC	Chloro Fluoro Carbon / Hydro Fluoro Carbon
70.	EPDM	Ethylene propylene diene Monomer
71.	ASTM	American Society for Testing and Materials

© 2022 MECON Limited All rights reserved

UTKARSHA ALUMINIUM DHATU NIGAM LIMITED

ESTABLISHING FACILITY FOR ALUMINIUM ALLOY MELTING, SLAB CASTING AND FLAT ROLLED PRODUCTS PRODUCTION FACILITY

GENERAL TECHNICAL SPECIFICATION FOR PAINTING (GS – 09)

MECON LIMITED
RANCHI - 834002

No. MEC/S/11/35/Q7R6/GTS/01/R0 **JUNE' 2022**

LIST OF CONTENTS FOR GS - 09

Sl. No.	Description	Page No.
01	GENERAL	2-2
02	SURFACE PREPARATION	3-4
03	PAINT APPLICATION	4-8
04	PAINTING SCHEMES	8-9
05	GUARANTEE	9-9
	ANNEXURE-01 – SURFACE PREPARATION GRADE	10-10
	ANNEXURE-02 – PAINT MATERIALS	11-16
	ANNEXURE-03 – PAINTING SCHEME	17-19
	ANNEXURE-04 – COLOUR CODE	20-20

© 2022 MECON Limited All rights reserved

01 GENERAL

01.01 This specification covers the materials, tools, facilities and quality requirement for surface preparation and painting of steel structures, equipment, piping, ducts, chutes, wood work etc.

01.02 This is only a general guideline of the painting scheme to be followed by the Tenderer. However, in case a specific painting procedure is stipulated in any tendering specification, then this general guideline shall be superceded. Any special case which may arise from time to time shall be dealt with individually on the merit of each case

01.03 The term "painting" referred herein covers rust preventive, fungus/insects preventive and decorative coating along with surface protection of the following area but not limited to the areas indicated below.

i) Structural steel works
ii) Mechanical equipment
iii) Electrical equipment
iv) Instrumentation and control equipment.
v) Pipe work
vi) Oxygen plant, etc.

01.04 Surfaces made of asbestos, aluminum, brass, bronze, galvanized steel, stainless steel, cast iron and other corrosion resistant alloys and rubber/synthetic polymer/fiber reinforcement plastic and buried pipe work are not required to be painted unless specified except for aesthetic purposes or for identification bands, wherever relevant.

01.05 The complete paint system for any item includes the following basic activities:

i) Proper surface preparation
ii) Application of primer coats
iii) Application of intermediate coats
iv) Application of finished coats

All the above coats shall be of quality paint products and of approved make. The scope of work shall also include supply of all paint materials as per specification described herein.

01.06 If the contractor desires to adopt alternative paint system for any specific item for an improvement or equivalent to the system specified here-in or as per recommendations of paint manufacturer, may do so subject to purchaser's approval in advance.

© 2022 MECON Limited All rights reserved

02 SURFACE PREPARATION

02.01 Surface preparation required for paint application, shall be such as to clean the surface thoroughly of any material which will be conducive to premature failure of the paint substrates.

02.02 All surfaces shall be cleaned of loose substances, and foreign materials, such as dirt, rust, scale, oil, grease, welding flux, etc. in order that the prime coat is rigidly anchored to the virgin metal surface. The surface preparation shall confirm to pictorial representation of surface quality grade of Swedish Standards Institution SIS – 055900 or equivalent standards such as SSPC – VIS – 1.67 or DIN 55928(Part 4) or BS 4232 or IS 1477 – 1971 (Part I)

02.03 The acceptable surface preparation quality / grade are described under each paint system. The procedures include solvent cleaning, hand tool cleaning, power tool cleaning, blast cleaning, wood surface cleaning, flame cleaning and pickling. This will ensure surface quality as required by the specific primer paint. For ready reference surface preparation quality grade to be adopted in respect of SIS 055900 and DIN 55928 (part-4) is given in Annexure-01.

02.03.01 Solvent Cleaning

The surface shall be cleaned by wiping, immersion, spraying or vapour contacting of a suitable solvent or washing with an emulsion or alkaline solution to remove oil, grease, dirt, old paint, etc. Solvent cleaning shall not remove rust, scales, mill scales or weld flux. Therefore, before application of paint, solvent cleaning shall be followed by other cleaning procedures as stated in subsequent clauses.

02.03.02 Hand Tool Cleaning

The surface shall be cleaned manually by vigorous wire brushing as per grade St-2 quality of Swedish Standard Institution SIS 055900 and DIN 555928. This method effectively removes loosely adherent materials, but would not affect residues of rust or mill scales that are intact are firmly adherent. Finally the surface is to be cleaned with a vacuum cleaner or with clean compressed air or with clean brush. After preparation the surface shall have a faint metallic shine. The appearance shall correspond to the prints designated St – 2.

02.03.03 Power Tool Cleaning

© 2022 MECON Limited All rights reserved

The surface shall be cleaned by electric or pneumatic tools, such as brushes, sanding machines, disc abrasive grinder, rotary disc scaler etc. to St – 3 quality. The tools shall be used carefully to prevent excessive roughening of surface and formation of ridges and burrs. This method will remove loosely adherent materials but would not affect residues of rust or mill scales that are firmly adherent and intact.

02.03.04 **Blast Cleaning**

The surface shall be cleaned by impingement of abrasive materials, such as graded sand at high velocity created by clean and dry compressed air blast as per the grade according to Swedish Standard Institution SIS 055900 .This method will remove loosely adherent materials as well as adherent scales and mill scales. Prior to application of blast, heavy deposit of oil and grease are removed by solvent cleaning excessive surface scales are removed by hand tools or power tool cleaning. The extents of removal of adherent scales is varied, depending on the application and are defined by the surface quality grades Sa1, Sa2, Sa2.5 and Sa3 in the order of increasing cleanliness. The blast cleaning is not recommended for sheet metal work.

02.03.05 **Flame Cleaning**

The surface is cleaned by rapid heating by means of oxyacetylene flame to loosen the adherent scales, followed immediately by wire brushing. This method will remove loosely adherent materials as well as most of the adherent scales and mill scales. In order to minimize or prevent distortion flame cutting shall not be used on members having thickness of 6 mm and lower.

02.03.06 **Pickling**

In this method the surface is cleaned of mill scales, rust or rust scales by chemical reaction or electrolysis or both.

03. PAINT APPLICATION

03.01 Paints

03.01.01 Paint shall be applied in accordance with paint manufacturer's recommendations. The work shall generally follow IS 1477 – 1971 (Part II) for jobs carried out in India and SSPC-PA-1 or DIN 55928 or equivalent for jobs carried out outside India.

03.01.02 General compatibility between primer and finishing paints shall be established by the paint manufacturer supplying the paints.

03.01.03 In the event of conflict between this general procedure on painting and the paint manufacturer's specification, the same

© 2022 MECON Limited All rights reserved

shall be immediately brought to the notice of the Purchaser. Generally in cases of such conflicts, manufacturer's specifications/recommendations shall prevail.

03.01.04 Before buying the paint in bulk, it is recommended to obtain sample of paint and establish "Control Area of Painting". On Control Area, surface preparation and painting shall be carried out.

03.01.05 If required, samples of paint shall be tested in laboratories to establish quality of paint with respect to:

(i) Viscosity
(ii) Adhesion/Bond of paint in steel surfaces
(iii) Adhesion/Simulated salt spray test.
(iv) Chemical analysis (percentage of solids by weight)
(v) Normal wear resistance as encountered during handling & erection.
(vi) Resistance against exposure to acid fumes, etc.

03.01.06 Whole quantity of paint for a particular system of paint shall be obtained from the same manufacturer.

03.01.07 The main Contractor shall be responsible for supply of paints and this responsibility shall not be passed on to the sub-contractor.

03.01.08 The painting material as delivered to the Contractor, must be in the manufacturer's original container bearing thereon manufacturer's name brand and description. Paint/Painting material in containers without labels or with illegible labels shall be rejected, removed from the area and shall not be used.

03.01.09 Thinners wherever used shall be those recommended by the paint manufacturers and shall be obtained in containers with manufacturer's name and brand name of thinner legibly printed, failing which the thinner is liable to be rejected and shall not be used.

03.01.10 All paint containers shall be clearly labeled to show the paint identification, date of manufacture, batch number, special instruction, shelf life etc. The container shall be opened only at the time of use.

03.01.11 All paints shall be stored in accordance with the requirements of laid down procedure by the paint manufacturer.

03.01.12 All ingredients in a paint container shall be thoroughly mixed to break-up lumps and disperse pigments before use and during application to maintain homogeneity.

03.01.13 The proposed make, quality and shade of the paint shall have the approval of the client.

© 2022 MECON Limited All rights reserved

03.01.14 The colour code of the finishing paint to be followed shall be intimated to the successful Tenderer after finalisaiton of order. The undercoat shall have different tint to distinguish the same from the finishing coat.

03.01.15 The Contractor shall furnish paint manufacturer's test report or technical data sheet pertaining to the paint selected. The data sheet shall indicate among other things the relevant standards, if any, composition in weight percent of pigments, vehicles, additives, drying time, viscosity, spreading rate, flash point, method of application, quality of surface preparation required, corrosion resistance properties and colour shades available.

03.01.16 For details of paint materials refer Annexure - 02

03.02 **General**

03.02.01 Each coat of paint shall be continuous, free of pores and of even film thickness without thin spots.

03.02.02 Each coat of paint shall be sufficiently dry before application of next coat.

03.02.03 Paint shall be applied at manufacturer's recommended rates. The number of coats shall be such that the minimum dry film thickness specified is achieved. The dry film thickness of painted surfaces shall be checked with ELCOMETER of measuring gauges to ensure application of specified DFT.

03.02.04 Zinc rich primer paints which have been exposed several months before finishing coat is applied shall be washed down thoroughly to remove soluble zinc salt deposits.

03.02.05 The machine finished surfaces shall be coated with white lead and tallow before shipment or before being put out into the open air.

03.02.06 Areas which become inaccessible after assemble shall be painted before assembly (after obtaining painting clearance from the inspecting authority) after requisite surface cleaning as specified.

03.02.07 Paint shall not be applied when the ambient temperature is 5 deg C and below or 45 deg C and above. Also paint shall not be applied in rain, wind, fog or at relative humidity of 80 % and above unless the manufacturer's recommendations permit. Applications of paint shall be only be spraying or brushing as per IS 486 – 1983 and IS 487 – 1985.

03.02.08 Primer paint shall be applied not later than 2 – 3 hours after preparation of surface, unless specified otherwise.

© 2022 MECON Limited All rights reserved

03.02.09 Edges, corners, crevices, depressions, joints and welds shall receive special attention to ensure that they receive painting coats of the required thickness.

03.02.10 Surfaces which cannot be painted but require protection shall be given a coat of rust inhibitive grease according to IS 958 – 1975 or solvent deposited compound according to IS 1153 – 1975 or IS 1674 – 1960.

03.02.11 Surfaces in contact during shop assembly shall not be painted. Surfaces which will be inaccessible after assembly shall receive minimum two coats of specified primer.

03.02.12 Surfaces to be in contact with wood, brick or other masonry shall be given one shop-coat of the specified primer.

03.03 **Site/Field Painting**

03.03.01 Wherever shop primer painting is scratched, abraded or damaged, the surface shall be thoroughly cleaned using emery paper and power driven wire brush wherever warranted, and touched up with corresponding primer. Touching up paint shall be matched and blended to eliminate conspicuous marks.

03.03.02 If more than 50% of the painted surface of an item requires repair, the entire item shall be mechanically cleaned and new primer coats shall be applied followed by intermediate and finishing coats as per painting specification.

03.03.03 All field welded areas on shop painted items shall be mechanically cleaned (including the weld area proper, adjacent areas contaminated by weld spatter or fumes and areas where existing primer paint is burnt).

Subsequently, new primer and finishing coats of paint shall be applied as per painting specification.

03.03.04 The first coat of finish paint at site shall be applied preferable within three months of the shop paint.

03.04 **Structural**

03.04.01 All fabricated steel structure, fabricated steel pipes, etc. shall have a minimum of two coats of primer paint before dispatch to site.

03.04.02 Parts of steel structures embedded in concrete shall be given a protective coat of Portland cement slurry immediately after fabrication and after surfaces of this part is thoroughly cleaned

© 2022 MECON Limited All rights reserved

from grease, rust, mill scales, etc. No paint shall be applied on this part.

03.04.03 All structures shall receive appropriate number of primer and finishing coats in order to achieve overall DFT as per design drawings/specification.

03.05 **Hot Surfaces**

03.05.01 Total DFT for heat resistant paints should not exceed 100 – 120 microns, otherwise flaking occurs (as per paint manufacturer's recommendations).

03.05.02 Heat resistant paints should be applied by brush.

03.05.03 Primer coat should not be applied on the surfaces having temperature condition more that 120 deg C.

04 PAINTING SCHEMES

For a complete painting scheme of any item being printed, all types of paints are to be procured from the same manufacturer as approved by the purchaser.

04.01 **Legend**

SP - Surface preparation quality as per SIS standard
2P1 - Two (2) coats of Primer paint type P1
1I1 - One (1) coats of Intermediate paint type I1
2F1 - Two (2) coats of Finish paint type F1
DFT - Dry Film Thickness in microns developed
CRT- Clean and Retouch

Type of paint products like P1 to P9, I1 to I4 and F1 to F10 have been specified under Annexure-02.

04.02 The painting scheme to be followed for various structure/equipment exposed to different condition is briefly given in Annexure-03 for guidance to the tenderer.

04.03 The colour code for different applications are indicated in Annexure-04. Wherever colour codes are not specified, the same is to be mutually agreed between the Purchaser and Contractor.

© 2022 MECON Limited All rights reserved

05. GUARANTEE

05.01 The Contractor shall guarantee that the physical and chemical properties of the paint materials conform with the specification of paint products.

05.02 The Contractor shall submit internal test reports from paint manufacturers regarding the quality of paint whenever asked by the Purchaser/Consultant.

05.03 Guarantee period shall commence from the date of completion of finishing coat of paint. The guarantee period will be indicated depending on the type of surface preparation and system of painting. To fulfill this obligations the Contractor may obtain from the painting manufacturer, guarantee for the performance of paint/painted surfaces.

© 2022 MECON Limited All rights reserved

Annexure-01

Surface Preparation Grade

Sl. No.	Surface Preparation	Swedish Std SIS 055900	DIN Std. Din 55928 (Part 4)
1	Blast cleaning to white metal Removal of all visible rusts, mill-scales, paint and foreign matters.	Sa 3	Sa 3
2	Blast cleaning to near white metal: 95% of any section of surface area is free from all rusts, mill-scales and visible residues.	Sa 2.5	Sa 2.5
3	Blast cleaning to commercial quality: At least 2/3 of any section of the surface area is free from all rusts, mill-scales and visible residues.	Sa 2	Sa 2
4	Brush-off blast cleaning: Removal of all loose mill-scales, rust and foreign matters etc.	Sa 1	Sa 1
5	Power tool cleaning: Very thorough scrapping and wire brushing to remove loose mill-scale, rust and foreign matters to have pronounced metallic shine.	St 3	St 3
6	Hand tool cleaning: Removal by hand brushing of loose mill-scale, loose rust and foreign matters.	St 2	St 2

]

© 2022 MECON Limited All rights reserved

Annexure - 02

PAINT MATERIALS

01. PRIMER PAINTS (P)

Primer paint products shall be applied only on dry and clean surfaces.

01.01 Primer Paint – P1 (Phenolic – Alkyd Based)

A single pack air drying phenolic modified alkyd composition with zinc phosphate as a primer paint conforming generally to IS : 2074.

Air drying time	-	About 60 minutes (touch dry)
	-	Overnight (hard dry)
Dry film thickness (DFT)/Coat	-	40 microns (min)
Temperature resistance	-	Upto 100^0C dry heat

01.02 Primer Paint – P2 (Chlororubber Based)

A single pack air drying high build chlorinated rubber based zinc phosphate primer.

Percent chlororubber	-	20 to 22 (% Chlorine above 65% in chlororubber)
Air drying time	-	About 15 minutes (touch dry)
	-	Overnight (hard dry)
DFT/ Coat	-	50 microns (min)
Temperature resistance	-	Up to 65^0 C dry heat

01.03 Primer Paint – P3 (PVC Copolymer Alkyd Based)

Polyvinyl chloride (PVC)	-	Alkyd zinc phosphate – redoxide based primer
Ratio	:	PVC copolymer + alkyd resin (1:1)
Pigments	:	Zinc phosphate & Fillers
Air drying time	-	24 hours
DFT/Coat	-	80 microns

© 2022 MECON Limited All rights reserved

Temperature resistance	-	Upto 80^0C dry heat

01.04 **Primer Paint – P4 (Epoxy Based)**

A two pack air drying Epoxy polyamide resin based red oxide-zinc phosphate primer.

Epoxy content (% wt.)	-	15 to 18
Air drying time	-	About 30 minutes (touch dry) - overnight (hard dry)
DFT/Coat	-	30 microns (min)
Temperature resistance	-	Upto 120^0C dry heat

01.05 **Primer Paint – P5 (Epoxy Based)**

A two pack air drying Epoxy polyamide with zinc dust of at least 92% zinc dust on the dry film

Epoxy content (% wt.)	-	8 to 10
Air drying time	-	Less than 10 minutes (touch dry) Less than 2 hours (hard dry)
DFT/Coat	-	40 microns (min)
Temperature resistance	-	Upto 300^0C dry heat

01.06 **Primer Paint – P6 (Poly – Vinyl Butyral Resin Based)**

A two pack air drying polyvinyl butyral resin based wash primer with rust inhibitive pigments.

Air drying time	-	5 to 7 minutes (touch dry) - 2 hours (hard dry)
DFT/Coat	-	8 microns
Temperature resistance	-	Upto 65^0C dry heat
Application for	-	Galvanised iron, aluminium, light alloys etc. on which the adhesion of conventional paints are poor.

01.07 **Primer Paint – P7 (Ethyl Zinc Silicate, EZS Based).**

A two pack heavy duty zinc dust rich silicate primer which protects the surface with just a single coat.

© 2022 MECON Limited All rights reserved

Total solids (3 wt)	-	84 +/- 2
Density (g / cc)	-	3.07 +/- 0.05
Air drying time	-	To top coat 16 hours
DFT / coat	-	60 microns
Temperature resistance	-	Upto 450 deg C dry heat

01.08 **Primer Paint – P8 (High Build Coal Tar Epoxy)**

A two pack cold cured H.B. epoxy coal tar coating – no primer is required.

Mixing ratio	-	Base: Hardener (4:1by vol.)
Air drying time	-	48 hours (hard dry) Full cure 7 days
DFT / Coat	-	100 microns

01.09 **Wood Varnish-P9**

Treated oil based primer pigmented with suitable pigments :

Air drying time	-	16 hours for application of top coat.
Coverage	-	10 to 14 sq. m/litre

02. **INTERMEDIATE PAINTS (I)**

These paints shall be applied over primer coats as an intermediate layer to provide weather proof seal of primer coats.

02.01 **Intermediate Paint-II (Phenolic alkyd based)**

A single pack high build phenolic based paint with micaceous iron oxide (M10) .

Air Drying Time	-	4 to 6hours (touch dry)
	-	2 days (hard dry)
DFT /Coat	-	75 microns (min)
Temperature resistance	-	Upto 100 deg C dry heat
Compatible with	-	Primer P1

02.02 **Intermediate Paint-I2 (Chlororubber based)**

A single pack air drying high build chloro based paint with MIO.

Air Drying Time	-	15 minutes (touch dry)
	-	24 hours (hard dry)
DFT/Coat	-	70 microns (min)
Temperature resistance	-	Upto 65 deg C dry heat
Compatible with	-	Primer P2,P3 & P4

© 2022 MECON Limited All rights reserved

02.03 **Intermediate Paint-I3 (PVC – Alkyd Based)**

PVC Coploymer	-	Resin 1 : 1
Pigments	-	Micaceous iron oxide (MIO)
DFT/Coat	-	80 microns (min)
Temperature resistance	-	Upto 80 deg C dry heat
Compatible with	-	Primer P2 & P3

02.04 **Intermediate paint-I4**

A two pack air drying high build epoxy resin based paint with MIO.

Air drying time	-	6 to 8 hours (touch dry)
	-	7 days (full cure)
DFT / coat	-	100 microns
Temperature resistance	-	Up to 180^0C dry heat
Compatible with	-	Primer P4 & P5

03. **FINISH PAINTS (F)**

Finish paint costs shall be applied over primer coats and intermediate coats after proper cleaning and touch up of primed surface.

03.01 **Finish Paint – F1**

A single pack air drying high gloss phenolic alkyd modified synthetic enamel paint suitably pigmented.

Air drying time	- -	3 to 4 hours (touch dry) 24 hours (hard dry)
DFT/Coat	-	25 microns (min)
Temperature resistance	-	Upto 100^0C dry heat
Compatible with	-	Primer P1 Intermediate I1
Colour	-	Generally all shades

03.02 **Finish Paint – F2**

A single pack air drying polyurethane enamel of high gloss and hard finish suitably pigmented.

Air drying time	-	2 to 2 ½ hours (touch dry)
	-	6 hours (hard dry)

© 2022 MECON Limited All rights reserved

DFT/Coat	-	30 microns (min)
Temperature resistance	-	Upto 100^0C dry heat
Compatible with	-	Primer P1 & P8 and Intermediate I1
Colour	-	Generally all shades

03.03 **Finish Paint – F3**

A two pack air drying bituminous aluminum paint.

Air drying time	- -	1 to 2 hours (touch dry) 21 hours (hard dry)
DFT/Coat	-	25 microns (min)
Temperature resistance	-	Upto 100^0C dry heat
Compatible with	-	Primer P1 and Intermediate I1
Colour	-	Bright metallic

03.04 **Finish Paint – F4**

A ready mixed oil-alkyd based synthetic enamel paint of high gloss and hard wearing properties.

Air drying time	-	6 to 8 hours
Coverage	-	14 to 16 Sq. m /litre
Temperature resistance	-	Upto 60^0C dry heat
Compatible with	-	P8
Colour	-	Generally all shades

03.05 **Finish Paint – F5**

A single pack air drying plasticized chlororubber paint suitably pigmented.

Air drying time	- -	30 minutes (touch dry) 24 hours (hard dry)
DFT/Coat	-	35 microns (min)
Temperature resistance	-	Upto 65^0C dry heat

© 2022 MECON Limited All rights reserved

Compatible with	-	Primer P2 & P3, Intermediate I2 & I3
Colour	-	Nearly all shades except few.

03.06 **Finish Paint – F6**

A PVC – Copolymer alkyd based enamel.

Density	-	1.17 U±U 0.05
Total solids (1 wt)	-	55 U±U 2
DFT/Coat	-	40 microns
Compatible with	-	P2 and P3

03.07 **Finish Paint – F7**

A two pack air drying epoxy polyamide enamel suitably pigmented.

Air drying time	- -	2 to 3 hours (touch dry) 7 days (full cure)
DFT/Coat	-	40 microns (min)
Temperature resistance	-	Up to 130^{0}C dry heat
Compatible with	-	Primer P4 & P5, Intermediate I4
Colour	-	Generally all shades.

03.08 **Finish Paint – F8**

A single pack synthetic rubber based aluminium paint.

Air drying time	- -	2 hours (touch dry) 24 hours (hard dry)
DFT/Coat	-	25 microns (min)
Temperature resistance	-	Upto 200^{0}C dry heat
Compatible with	-	No Primer paint except primer P6 is applicable in case of non-ferrous substrate.
Colour	-	Smooth aluminium.

© 2022 MECON Limited All rights reserved

Annexure - 03

PAINTING SCHEME

Sl. No.	Description	Painting Scheme		Total DFT
		At Shop	At Site	
1.0	**Steel Structures (Temp. not exceeding 80^{0}C)**			(Refer Note-1)
1.1	Technological steel structures for plant and equipment			
	Indoor	SP – Sa 2.5 2P1	CRT 2F1	130
	Outdoor	SP – Sa 2.5 2P1 1I1	CRT 2F1	205
1.2	Fabricated steel structures at site for rung ladders, cat-ladders, gates, rolling shutters, etc. (Springs/rubbing surfaces excluded)			
	- Indoor / Outdoor	SP – St-2 and/ or St-3 2P1	CRT 2F1	130
1.3	Walkways, stairs, platforms etc. which are of wearing surface			
	- Indoor	SP – St-2 and/ or St-3 2P1	CRT 2F1	130
	- Outdoor	SP- St2 and/ or St-3 2P1 1I1	CRT 2F1	205
1.4	Steel doors and windows			
	- Indoor / outdoor	SP–St-2 and / or St-3 2P1 1I1	CRT 2F2	215
2.0	**MECHANICAL EQUIPMENT**			
2.1	Mechanical equipment (Temp. not exceeding 80^{0}C)			
2.1.1	Static equipment like storage tanks, vessels, bins, bunkers, heat exchangers, coolers, cyclones, scrubbers, etc.			
	- Indoor	SP – Sa 2.5 2P2/2P3	CRT 2F5/2F6	170/240

© 2022 MECON Limited All rights reserved

Sl. No.	Description	Painting Scheme		Total DFT
		At Shop	At Site	
	- Outdoor	SP – Sa 2.5 2P2/2P3+1I2/1I3	CRT 2F5/2F6	240/320
2.1.2	Rotary/moving equipment and machineries like crushers, mills, vibratory screens, bin activators, blowers, fan, air/gas compressors, pumps, gear boxes, machine housings etc.			
	- Indoor	SP – Sa 2.5 2P3/2P4	CRT 2F6/2F7	240/140
	- Outdoor	SP-Sa 2.5 2P3 + 1I3/1I4	CRT 2F6/2F7	320/340
3.0	**Pipe / Duct work (Overground)**			
3.1	Non – insulated (temperature up to 80^0C)			
	- Indoor	SP – St2 and or St3 2P1	CRT 2F1	130
	- Outdoor	SP – St2 and / or St3 2P1 + 1I1	CRT 2F1	205
3.2	Insulated (hot)			
	- Indoor/Outdoor	SP- St2 and/ or St3 1P1	Remove paint and insulate	
4.0	**<u>Oxygen Plant</u>**			
4.1	Outdoor steel structures	SP – St2 and / or St3 2P1 + 1I1	CRT 2F3	205
4.2	Rotary equipment like air compressors	Sa 2.5 2P4	CRT 2F7	140
5.0	**<u>Others</u>**			
5.1	Standard mobile equipment like chasis of trucks, dumpers, crawler cranes bulldozers, railway rakes, chasis of slag cars, ladle cars, etc.	As per manufacturer's standards		
5.2	Laboratory equipment like ovens,	Stove enamelling	CRT	110

© 2022 MECON Limited All rights reserved

Sl. No.	Description	Painting Scheme		Total DFT
		At Shop	At Site	
	screens, magnetic stirrers, samplers, etc.			
5.3	Steel structures partly immersed in water	SP – Sa 2.5 2P8	CRT	 200

0B **Notes: -**

1. Painting scheme of all fabricated steel structures, fabricated pipe work, building structure, conveyor galleries, pipe trestles etc. is indicated in the Technical Specification of steel structures.

2. Primer Paint

   Primer coat shall be suitable for intended temperature applications as per manufacturer's recommendation. The primer selection shall be generally in line with the specification laid down in Annexure-02.

3. Finish Paint

   In case of Aluminium cladding final painting will not be required.

© 2022 MECON Limited All rights reserved

ANNEXURE - 04

COLOUR CODE

The colour codes are mentioned for all the items including pipe work. Shades of finish coat of paint applied over respective item indicated below are tentative and subject to alteration as per Purchaser's request or due to compatible paint system adopted. The service for which colour code/bands are not specified are to be mutully agreed for by the Purchaser & the Contractor.

Sl. No.	Items Painted	1BColour	Colour No. of IS:5
1.	**Structures**		
	Building frames including bracings, side girts, louvers etc.	Aircraft grey	693
	Crane girders	Azure blue	104
	Crane stops	Post office red	538
	Gutters	Black bituminous aluminium	-
	Fire escape platforms ladders, etc.	Signal red	537
	General hand railing, top runners	Lemon yellow	355
	Rung ladders	Lemon yellow	355
	All members blocking passages for movement	Lemon yellow	355
	Trestles, towers and pipe bridges	Dark admiralty grey	632
	Conveyor gallery structures	Aircraft grey	693
	Steel chimneys	Aluminium	-
2.	**Equipment and Machinery**		
	General indoor equipment	Light grey	631
	General outdoor equipment	Dark admiralty	632
	Crane bridges, trolleys, hooks etc. and other mobile equipment	Base : Lemon yellow Stripes : Black (100 mm wide)	355
	Furnaces	Aluminium	
	Tanks	Base : Same as for general equipment Strips : Same shade as for piping around the tnk at half the tank height	
	Fire-fighting equipment	Signal red	537

3. **Pipe work**

Pipeline shall be painted as per the IPSS colour code.

© 2022 MECON Limited All rights reserved

UTKARSHA ALUMINIUM DHATU NIGAM LIMITED

ESTABLISHING FACILITY FOR ALUMINIUM ALLOY MELTING, SLAB CASTING AND FLAT ROLLED PRODUCTS PRODUCTION FACILITY

GENERAL TECHNICAL SPECIFICATION FOR HYDRAULICS & LUBRICATION (GS – 10)

MECON LIMITED
RANCHI - 834002

No. MEC/S/11/35/Q7R6/GTS/01/R0 **JUNE' 2022**

LIST OF CONTENTS FOR GS - 10

SL. NO.	DESCRIPTION	PAGE NO.
1.	GENERAL SPECIFICATION FOR HYDRAULIC, OIL LUBRICATION, GREASE, PNEUMATIC SYSTEMS WITH ASSOCIATED PIPING AND WATER PIPEWORK	2-2
2.	HYDRAULIC SYSTEMS & INTERCONNECTING PIPING	2 – 23
3.	OIL LUBRICATION SYSTEMS & INTERCONNECTING PIPING	24 – 39
4.	GREASE LUBRICATION SYSTEMS & INTERCONNECTING PIPING	39 – 44
5.	PNEUMATIC SYSTEM & INTERCONNECTING PIPING	45 – 49
6.	ABBREVIATION	49 – 49

đ 2022 MECON Limited. All rights reserved.

1. GENERAL SPECIFICATION FOR HYDRAULIC, OIL LUBRICATION, GREASE, PNEUMATIC SYSTEMS WITH INTERCONNECTING PIPING AND WATER PIPEWORK

This General Specification covers specification for Hydraulic System, Oil Lubrication System, Grease Lubrication System & Pneumatic System with associated piping and water pipework for all packages. However for individual packages Technical Specification for Hydraulic System, Oil Lubrication System, Grease Lubrication System & Pneumatic System with associated piping is provided. In case of contradiction between GS & TS, GS shall be binding to tenderer.

2. HYDRAULIC SYSTEM & INTERCONNECTING PIPING

2.01 SCOPE

2.01.01 This general specification covers the hydraulic systems required for various units / equipment. The term 'hydraulic systems' referred herein generally covers the following:

- Hydraulic power packs consisting of hydraulic fluid reservoirs with accessories, pumps, motors, filters, coolers, isolation valves, check valves, instruments etc.
- Accumulator stands consisting of accumulators, safety shut-off block etc.
- Valve stands consisting of all direction, pressure and flow control valves, isolation valves, check valves & instruments.
- Hydraulic cylinders/actuators and motors.
- Hydraulic pipework complete with pipes, fittings, valves, hoses, clamps & supports.
- Instruments, controls and safety devices for indicating and recording of pressure, temperature & level of fluid in reservoir etc; for alarms for abnormal conditions and for interlocks for safe operation.
- Electrical control panel.
- Hydraulic fluid.

Scope of work shall also include supply of equipment, piping, initial fill & consumables, erection & commissioning of all equipment of hydraulic systems including interconnecting piping.

đ 2022 MECON Limited. All rights reserved.

2.01.02 The design and construction of the hydraulic systems shall be suitable in every way for the service intended and shall be oriented towards maximizing interchangeability of components and minimising maintenance. Each system shall be complete in all respects including all accessories essential for proper installation, operation and maintenance, irrespective of whether such systems are specifically mentioned in the Technical and General Specification. In case of any contradiction between General Specification & Technical Specification, General Specification shall be considered for final.

2.02 STANDARDS

2.02.01 The hydraulic systems shall be designed, manufactured, erected, tested and commissioned as per the standards laid down in this specification. Detailed instructions on such aspects as are not indicated herein shall be as per the codes and practices adopted by the Indian Standards (IS), where available, or by the American National Standard Institution (ANSI), or by the Joint Industry Council, U.S.A (JIC) or Comite European des Transmissions Oleohydrauliques et Pneumatics (CETOP) or as per the national standards institution of the country of origin or the codes of practices followed by the manufacturer. These shall be clearly indicated by the contractor in the proposal and Employer's approval obtained. Wherever standards other than IS are used / referred, the Contractor shall indicate the equivalent IS.

2.02.03 Necessary noise abatement measures shall be provided to keep the dBA level as per statutory requirement.

2.03 DESIGN BASIS

2.03.01 General

2.03.01.01 The hydraulic power systems shall be designed to ensure compatibility of the system components with hydraulic fluid selected at operating conditions in the plant and under ambient conditions prevalent at Nellore, Andhra Pradesh.

2.03.01.02 Hydraulic room shall be preferably located on ground floor.

2.03.01.03 Hydraulic fluid shall be mineral oil based on its suitability at the operating temperature of the system, proven performance.

Use of hydraulic fluid other than mineral oil shall be brought into notice by tenderer.

2.03.01.04 Fluid cleanliness required for satisfactory and uninterrupted operation of the system shall be taken care.

2.03.01.05 Specifications of the Hydraulic fluid for each system shall be furnished by contractor, indicating type of fluid, ISO viscosity range at operating temperatures, viscosity index, physical characteristics, performance test specification, flash point, fire point and Oil Tenderer's trade name. Wherever possible equivalents with due regard to local availability shall be mentioned. The Contractor shall also indicate the cleanliness level of oil required both in terms of water content and particle content.

2.03.01.06 Anodised circuit plate shall be provided for all tank units, power units, recirculation filter units, valve stands and accumulator stands.

đ 2022 MECON Limited. All rights reserved.

2.03.01.07 The hydraulic system performs actuation of actuators mounted on equipment to achieve specific functions e.g., application of pressure/force/torque, generation of linear or rotary motion etc.

2.03.01.08 The design and construction of the Hydraulic systems shall be suitable in every way for the service intended and shall be oriented towards maximising interchangeability of components and minimising maintenance. Each system shall be complete in all respects including all accessories essential for proper installation, operation and maintenance.

2.03.01.09 Electrical system associated with hydraulic system shall confirm to electrical chapter of this TS and GTS.

2.03.01.10 In the interest of standardisation, the Employer reserves the right of selecting a particular manufacturer of Hydraulic power system equipment and / or components and the contractor shall supply equipment / components of the particular make, if so required.

2.03.02 Hydraulic Circuits

2.03.02.01 Design considerations

a) Minimise surge pressure using accumulators.

b) All components shall be suitable to withstand the peak surge pressure.

c) Minimise generation of heat in the system by adequately sizing the pipework & valves and by reducing bends & restrictions but without sacrificing the functional efficiency of the system. Coolers to limit the working fluid temperature around 40°C (max).

d) Minimise pressure drop in the circuit.

e) Incorporate a reservoir of adequate capacity, pumps with motors, filters to eliminate undesirable particulate contaminants, generously sized pipework, accessories and hoses, adequate cooling system to cool the hydraulic fluid as required, accumulators, all valves, instruments and all necessary audio-visual alarms.

f) Incorporate necessary stand-by pumps and filters, by-passes across cooler, isolation devises, etc. to ensure continuous operation of the systems, even when some components are under maintenance, cleaning or repair.

g) Incorporate necessary connections, valves and appurtenances to facilitate air purging, testing, pickling, flushing, draining, sampling and commissioning the systems.

h) Incorporate necessary safety features to reduce the risk of fire at points of application and also at locations around hot zones.

i) Incorporate necessary provisions for emergency operation in the event of power failure to bring the equipment in safe condition. Emergency power shall be provided at solenoid valves etc. mounted on hydraulic component involved in emergency operation.

© 2022 MECON Limited. All rights reserved.

j) Each circuit shall be designed such that the load variations and changes in fluid temperature shall not cause such variations in the cycle time which shall be inconsistent with the service intended.

k) Hydraulic System shall be designed to ensure safety of the operating people & of equipment actuated by the hydraulic system and in case of emergencies such as power failure, bursting of hoses or pipe connections, opening of safety valves and other devices etc.

l) Hydraulic system shall be designed taking into account the maximum pressure anticipated in system.

m) All pressure switches, pressure transmitter and pressure gauge shall be connected by minimess hose and minimess coupling.

n) Hydraulic system located in unattended areas, basements etc. shall have remote control facilities to ensure safety of the main equipment served.

2.03.03 Sequence Time Sheet

2.03.03.01 A chart shall be supplied showing sequence of operation with relation to the cycle time, and electrical actuation. This chart should also show pressure and flow for each portion of the cycle.

2.03.03.02 Detailed list of each component and equipment served by each hydraulic system.

2.03.04 Devices for Circuit Control, Protection and Safety

2.03.04.01 Over-Pressure Capabilities and Protection

2.03.04.01.01 Balanced piston type relief valves shall be provided on the discharge side of all positive displacement pumps. Over pressure protection shall be provided elsewhere in circuits where damage to the equipments or hazards to personnel may result. Check valves shall be provided on the discharge side of all pump to prevent any back flow.

2.03.04.01.02 Hydraulic motor speeds shall be controlled by suitable pressure compensated flow control valve.

2.03.05 Interlocks

2.03.05.01 The machinery and all connected equipment shall be brought to a safe stop upon failure of electric power, control power, hydraulic power, or control components. The system shall remain inoperative after restoration of electric power until the controls are reset. If an unscheduled stop would result in an unsafe condition then the failure shall be announced by audio-visual alarms and stand-by or stored energy shall be provided that will permit a delayed or gradual stop under manual or automatic control.

©2022 MECON Limited. All rights reserved.

2.03.05.02 In the event of a failure in the automatic controls, manual controls shall be provided that would permit bringing the system to a safe operation or to a stop.

2.03.05.03 Hydraulic systems shall be provided with local control panel in hydraulic room for start, stop and audio-visual alarms for faults. Hydraulic systems shall be suitably interlocked with PLC.

2.03.06 Fault Alarms

2.03.06.01 Audio-visual alarms shall be provided in the local control panel for each hydraulic system for the following faults:

a) Low pressure in the system.

b) Excessive temperature of fluid in reservoir.

c) High level of fluid in reservoir and stoppage of filling pump.

d) Low level of fluid in reservoir.

e) Low-Low level of fluid in reservoir and cut-off of main pumps and circulation pumps.

f) Clogging of filters.

g) Motor overload.

2.03.06.02 For any of the above faults, necessary audio-visual alarms shall be provided in the control room/control pulpit for "FAULT IN HYDRAULIC SYSTEM".

2.04 EQUIPMENT (UNITS OF HYDRAULIC SYSTEM AND OTHER FACILITIES)

Equipment for hydraulic system shall consist of the following major components.

- Hydraulic fluid reservoir with accessories.
- Pumps with Electric motors.
- Pressure/Return filters.
- Cooler (Offline recirculating cooling & filtration system).
- Isolation / check valves.
- Instruments.
- Accumulator stands consisting of accumulators, safety shut-off blocks etc.
- Valve stands consisting of all direction, pressure and flow control valves, isolation valves, check valves & instruments etc complete with electrical wiring terminating in respective junction box.
- Hydraulic cylinders and motors.
- Pipe work complete with pipes, fittings, valves, hoses, clamps and supports.
- Other facilities required for hydraulic systems:
  - Portable oil filling unit – 1 no. for each location of hydraulic room.

đ 2022 MECON Limited. All rights reserved.

- Contamination analysis kit – 1 no. for each area.
- Portable nitrogen booster unit / Portable nitrogen compressor – 1 no. for each area as applicable.
- Nitrogen charging kit – 1 no. for each location of hydraulic room (if applicable).
- Mobile vacuum dehydrator – 1 no. / Mobile electrostatic oil cleaner – 1 no. for each area as applicable.
- One no. of Sump pump and monorail (as required) to be provided in each hydraulic room.

2.04.01 Reservoirs

2.04.01.01 Capacity

i) Reservoir shall be of welded steel rectangular construction and the dimensions shall be proportioned as length: width: height = 2:1.5:1 (approx.) Reservoir shall be fabricated using 6 mm thick (min.) stainless steel / carbon steel plate & shall have a working (useful) volume adequate to contain all the fluid that will return from the system, maintain the fluid level within adequate working height limits during operation. In case of hydraulic system having servo valves or high degree proportional valve stainless steel tank shall be used. In case of mineral oil, the working (useful) volume of reservoir shall be determined as per following approximation:-

Total pumping capacity	Working (Useful) volume of Reservoir
Upto 50 lpm	10 mins. of total pump flow
50 (above)-100 lpm	7.5 mins. of total pump flow
Above100 lpm	6 mins. of total pump flow

Gross volume of reservoir shall be 20% more than the working volume.

Hydraulic tank shall be located at suitable elevation such that pumping unit shall have flooded suction even at low level cut-off of level switch.

ii) Reservoir shall be provided with:

- Suitable square or rectangular or circular opening with oil tight cover in each chamber of the reservoir for efficient cleaning of reservoir. Size of the opening shall be suitable for a man to go inside the tank, where possible.
- Sloping bottom with 4% slope. Slope shall be towards drain valve / clean – out door and away from suction nozzle.
- Baffle plate separating suction & return chamber.
- In each chamber of the reservoir separate (40nb ball valves) drain valves to be provided.
- Separate air breathers complete with 3 micron replaceable filter element and dehydrating chamber containing silica gel (for

đ 2022 MECON Limited. All rights reserved.

moisture trapping). The air breathers shall be of sufficient capacity and in sufficient numbers to maintain approximate atmospheric pressure even at maximum demands of the hydraulic system and at maximum return of fluid from system. Combined breather and filter shall not be used.

- Tube type protected level indicator shall be provided to cover the entire height of the tank (overlapping). The level indicator shall have bicolour rotating flapper and isolation valves with limit switches and drain valve. The level indicator shall be provided with calibrated scale with markings to show 'high' and 'low' levels with pump running and where necessary, high level with pump stoppage.

- Electrical contact type level switches shall be provided with necessary switches for high level alarm & filling pump cut-off, low level alarm and low-low level alarm for main & circulating pump cut-off. The level switches shall preferably be mounted externally to the reservoir on transparent tube and is moved by the magnetic field of the float inside the stand pipe. The electrical contacts or level transmitter are mounted to the indicator scale. The contact can be adjusted to any position. Contact type switch shall be provided with LED. The connection of the stand pipe to the tank shall be by means of standard pipe fittings & flanges and isolation valves. Provision shall be for continuous analogue signal 4-20mA to control room for on-line monitoring of level and various alarm / tripping.

- **Dial type temperature gauge**, mercury in steel design, protected and mounted in a bulbwell shall be installed in the reservoir with at least 150 mm immersion and minimum 100 mm dial size with minimess hose and gauge isolation. At least two (2) nos. thermometers shall be provided in the reservoir, one (1) no. in the suction chamber and one (1) no. in the return chamber of the reservoir. The level of thermometers shall be slightly above the suction height.

- **Temperature transmitter** shall be provided with (4-20mA) signal accessible to main control room for on-line temperature measurement and for alarm / tripping as applicable for various set points. Temperature transmitter shall also be used for ON / OFF of plate type heat exchanger. High temperature alarm and pump tripping shall also be provided. Local digital display of temperature at temperature transmitter mounted on tank shall also be provided.

- **Sampling valves** (15 NB needle valve) for taking sample of fluid for checking quality of hydraulic fluid. One (1) no. sampling valve shall be provided in the return chamber of the reservoir.

- Necessary nozzles with isolation valves in the suction and return chambers of the tank for connecting mobile vacuum dehydrator /

© 2022 MECON Limited. All rights reserved.

electrostatic liquid cleaner (If used), as and when required, for cleaning the hydraulic fluid in the reservoir.

- Necessary nozzles for pump suction line, return line, leakage line, drain line from main pumps, relief return line and return line from circulation unit.
- Necessary ladders shall be provided outside as well as inside the reservoir for climbing on top of the reservoir and for going inside the reservoir respectively during maintenance.
- All the nozzles connections above the oil reservoir should have the raised face so as to eliminate the water ingression into the reservoir.

iii) The reservoir shall be designed and constructed to prevent entry of foreign matter, including water and shall be separate & removable from the equipment base. Reservoir shall be fabricated from stainless steel of adequate strength and thickness. Cast reservoirs shall not be used.

iv) Wherever the reservoir is mounted on floor, the bottom of the reservoir shall have a minimum clearance of 150 mm from the floor. The legs shall have appropriate mounting holes.

v) The level of ‘low-low’ level switch in the reservoir shall be at least 50 mm above the topmost level of suction nozzle.

vi) Reservoirs shall be designed for adequate heat dissipation by generously proportioning tank wall surface and so installed as to allow unhindered air flow over all surfaces, sides, top and bottom.

vii) The suction pipe shall be below the low-low level of fluid to avoid cavitation. The return pipe, relief return pipe and return line from circulation unit, shall be brought down below the low-low level of fluid in reservoir to avoid aeration. The return pipe & relief return pipe shall be located in the return chamber of the reservoir and shall be provided with bevelled cut pipe for smooth flow.

viii) The pipe ends for leakage line from valve stands, drain line from hydraulic motors, drain lines from main pumps shall be kept above maximum fluid level in the reservoir to facilitate free return of these low pressure fluids.

ix) Filling of hydraulic fluid in the reservoir shall be through a separate set of duplex filters. The fineness of the duplex filters shall be equal to the fineness of circulation filters for the respective system. The duplex filters shall be provided with built-in changeover valves at the inlet & outlet. Inlet of duplex filter shall be connected to outlet of portable oil filling unit and suction of portable filter shall be in fresh barrel.

x) Draining of hydraulic fluid from reservoir shall be done by filter cooler circulation pump. Necessary branch connection with isolation valve and check valve shall be provided on the downstream side of circulation pumps for draining.

©2022 MECON Limited. All rights reserved.

xi) Each reservoir unit shall be provided with an electrical junction box and shall be pre-wired upto junction box.

2.04.02 Pumps

2.04.02.01 Motors for Main pumps shall have 25% spare over pump relief setting. Pump speed shall be 1500 rpm. Main pumps shall preferably be variable flow, pressure compensated axial piston pumps.

2.04.02.02 Each pump discharge line relief valve of suitable adjustable range set to relieve at 110 % of system pressure.

Each pump should be connected to motor by Bell housing or coupled by suitable gear coupling / Love-joy coupling.

2.04.02.03 Unless specified otherwise, main pumps shall be provided with stand-by pumps.

The number of stand-by pumps shall be as follows:

Upto 3 nos. working pumps	:	1 no. standby pump
For 4 nos. to 6 nos. working pumps	:	2 nos. standby pumps
For 7 nos. to 9 nos. working pumps	:	3 nos. standby pumps

The standby pumps shall be connected to the circuit and kept ready for operation. Where only one (1) operating pump is required, an identical standby pump shall be provided.

2.04.02.04 Circulation pumps of adequate capacity (Minimum 30% of total system capacity) with motors shall be provided with parallel filtration and cooling circuit. One working and one standby circulation pump shall be provided. The circulation pumps shall be triple screw pump / Vane pump. Pump speed shall be 1500 rpm.

2.04.02.05 Both main and circulation pumps shall preferably be floor mounted with flooded suction and shall not be mounted inside reservoir or on top of reservoir.

2.04.02.06 All pumps shall be provided with isolation valves with limit switches on suction side and isolation valves on discharge side to facilitate maintenance. Main pumps shall be provided with flexible connector on suction side and high pressure hose on discharge side, whereas, circulation pumps shall be provided with compensators on both suction and discharge sides. On the discharge side of each main pump a manifold shall be provided on which the pressure line filter, pressure gauge, isolation valve, check valve, minimess coupling shall be mounted. On downstream side of pump, unloading type relief valve shall be mounted. The material of the manifold block shall be forged steel. Necessary check valve, relief valve and pressure gauge shall be provided on the downstream side of each circulation pump.

2.04.02.07 Electronic Strain Gauge type Pressure switch shall be provided on downstream side of main pumps and recirculation pumps, with (4-20mA) signal accessible to main control room for on-line measurement of pressure. Pressure switch shall have various switching facilities low pressure / high pressure alarm, low-low pressure / excessive high pressure pump trip, etc. Necessary minimess hose & coupling to be provided to connect Pressure switches & Pressure transmitter. Pressure switch shall have facility for local digital display and setting of various

đ 2022 MECON Limited. All rights reserved.

set pressure as per requirement. Pressure transmitter can be used if process demands.

2.04.02.08 Pressure gauges shall be panel mounting type, ¼" BSP back connection glycerine filled type heavy duty 150 mm dial size of suitable range complete with bourdon, movement and snubber of AISI 316 SS, in die cast aluminium alloy, moisture proof case, heavy enamelled black and stoved with zero adjustment mechanism. To be installed with minimess hose and isolation valves.

2.04.02.09 One no. loose pressure gauge (For each range) with minimess hose and coupling shall be provided for each hydraulic system for measuring pressure at different pressure check points.

2.04.02.10 Necessary hose shall be provided on the drain line from each main pump of variable flow axial piston type. The drain line from each main pump shall preferably be connected to tank separately. In case the drain lines from main pumps are connected to a common header, in that case check valve shall be

2.04.02.11 Necessary branch connection with isolation valve and check valve shall be provided on the discharge side of the circulation pumps for emptying the hydraulic fluid from reservoir.

Necessary branch connection with isolation valve and check valve shall also be provided on the upstream side of circulation filters for filling fresh hydraulic fluid in reservoir through circulation filters.

2.04.02.12 Each pump-motor unit shall be mounted on a base frame with vibration isolator with drip tray and drain valve. The pumping units shall be provided with electrical junction boxes and shall be pre-wired upto junction boxes.

2.04.02.13 The following information shall be preferably shown on metallic name plates on each hydraulic pump:

i) Manufacturer's name and address

ii) Manufacturer's part, model and / or serial number

iii) Flow and working pressure

The direction of rotation of each pump shall be clearly indicated on the pump where it can be readily seen.

2.04.03 Filters and other Oil Cleaning Devices

2.04.03.01 Filters shall be provided for continuous removal, from the hydraulic fluid, of contaminants which are likely to cause malfunction of pumps, valves and actuators and maintain desired cleanliness level of hydraulic fluid. Adequate filtration level shall be maintained for each system. The fineness of filters shall depend on the components used in the hydraulic system. The following cleanliness level of oil shall be maintained for hydraulic systems:

Systems without Servo Valves	:	NAS 7
and proportional valves		
Systems with Proportional valves	:	NAS 5

đ 2022 MECON Limited. All rights reserved.

Systems with Servo Valves	:	NAS 4

2.04.03.02 In general, hydraulic systems shall be provided with pressure line filters, circulation filters and return line filters. All filters shall have β>=200.

2.04.03.03 Pressure line filter on the downstream side of each main pump shall be single filter and shall be without bypass valve. Necessary isolation valves shall be provided across pressure line filters for maintenance. The circulation filters and return line filters shall be Duplex type with built-in changeover valve at the inlet and outlet. The circulation and return line filters shall be provided with bypass check valve. Check valve shall be provided on the upstream side of return line filters.

2.04.03.04 All the pressure line, circulation and return line filters shall be provided with electrical switches for audio-visual alarm for filter clogging. Minimess couplings shall be provided across each pressure line, circulation and return line filter. Each filter shall be provided with necessary drain and vent connections.

2.04.03.05 The material of filter elements shall be compatible with the hydraulic fluid. Depth type filter shall be used. The filter elements shall be of disposable type

2.04.03.06 The selection of filters shall be guided by:

- Highly stable βx value over a wide pressure drop range.
- High dirt retention capacity of filter element.
- Low pressure drop in filter housing.
- Durable housing construction.
- Material of filter element and housing compatible with hydraulic fluid.

2.04.03.07 The capacity of pressure line, circulation and return line filters shall be generally as follows:

Pressure line filters	:	1.5 to 2 times pump flow at Δp= 0.8 to 1 bar in clean condition (element +housing)
Circulation filters	:	1.5 to 2 times of pump flow at Δp=0.3 to 0.5 bar in clean condition (element +housing)
Return Line filters	:	3 times of maximum return flow or 3 times of maximum pump flow, whichever is greater, at Δp=0.3 to 0.5 bar in clean condition (element +housing)

2.04.03.08 The circulation filter unit and return line filter unit shall be provided with drip tray and drain line valve. The circulation filter unit and return line filter unit shall be provided with electrical junction boxes and shall be pre-wired upto the respective junction box.

2.04.04 <u>Coolers</u>

2.04.04.01 Coolers shall be provided in the hydraulic systems where normal operation of the hydraulic systems would raise the temperature of the working fluid beyond 40°C during any time of the year. The coolers shall be plate type of gasketted design.

©2022 MECON Limited. All rights reserved.

The plate type coolers (Plate material – SS) shall designed such that all the four (4) ports shall be on one (1) side of cooler. Cooler shall have cooling capacity of atleast 30% of installed power on unit. Cooler shall be generously designed considering water inlet temperature of 35°C and shall have 20% spare capacity. The cooling medium shall be water. Plate type cooler shall be designed as per manufacturer's standard.

Air cooler of adequate rating shall be provided where cooling water is not available.

2.04.04.02 Coolers shall be provided with the following:

a) Isolation valves on cooler water inlet and outlet lines.

b) Isolation valves on oil inlet & outlet lines from cooler and on the bypass line across cooler globe valve shall be provided.

c) Pressure gauge with isolation valve and temperature indicators on cooler water inlet & out lines.

d) Pressure gauge with isolation valve and temperature indicators on oil inlet & outlet lines from cooler.

e) Solenoid operated ON/OFF valve suitable for water service of suitable size. Voltage 24 V DC. The solenoid shall have interlock with the thermostat.

f) Y strainer of suitable size and 80µ SS screen shall be provided at water inlet.

g) Minimess couplings on oil inlet and outlet lines from cooler to check pressure.

2.04.04.03 Coolers shall be mounted on separate skid and shall be mounted on a frame with drip tray and drain valve. The cooler unit shall be provided with electrical junction box and shall be pre-wired upto junction box.

2.04.04.04 The pressure drop across cooler on oil circuit shall be less than one (1) bar and on water circuit shall be less than 0.5 bar.

2.04.05 <u>Accumulators</u>

2.04.05.01 Accumulators shall be used for any of following functions as per design:

- Energy storage
- Emergency operation
- Shock absorption and pulsation damping

2.04.05.02 The accumulators shall preferably be of bladder type, charged with nitrogen or inert gas, sized to meet the functional needs and designed to withstand at least 1.5 times the nominal design pressure of the hydraulic system and shall conform to the code for pressure vessels prevailing in the country of origin or to any equivalent international codes for pressure vessels.

Where large amount of oil is to be supplied to the system in short time, piston type accumulator with nitrogen gas bottles shall be used. However, use of piston accumulator shall be brought to the notice / approval from Employers.

©2022 MECON Limited. All rights reserved.

2.04.05.03 Each accumulator shall be provided with safety shut-off block containing isolation valve, drain valve, safety relief valve, pressure gauge, pressure check minimess coupling. Necessary charging and testing kit for accumulators, complete with isolation valve, manifold, hose, etc. shall be provided.

2.04.05.04 Each accumulator stand shall be provided with drip tray and drain valve. The accumulator stand shall be provided with electrical junction boxes and shall be pre-wired upto respective junction box.

2.04.05.05 The following information shall be permanently indicated on each hydraulic accumulator:

a) Manufacturer's name and address

b) Manufacturer's model number, capacity

c) Manufacturer's serial number, if any

d) Rated maximum operating pressure

e) Charging medium

f) Total fluid capacity

2.04.06 Valve stands

2.04.06.01 All hydraulic directional valves shall be sub-plate/manifold mounted on valve stand as per hydraulic schematic. Directional valves of large capacity shall be hydraulic pilot operated type. Directional valves shall have manual override.

2.04.06.02 Valves shall not be mounted on reservoir. Suitable valve stands shall be used for mounting valves for the ease of operation and maintenance. The valve stands shall be of modular vertical column design or Table top design.

2.04.06.03 Each valve stand shall be provided with the following:

a) Isolation valves on the pressure line and pilot pressure line near each valve stand.

b) Check valves on the tank return line and leakage line near each valve stand.

c) Isolation valves on A, B lines from each valve stand to actuator.

d) Minimess couplings on pressure line & pilot pressure line at the entry to each valve stand / valve block and on A, B lines from each valve stand/valve block.

e) Minimess couplings across pressure reducing valves and on upstream side of relief valve within the valve stand / valve block.

f) Material of manifold block should be forged Steel / GGG40.

© 2022 MECON Limited. All rights reserved.

2.04.06.04 Each valve stand shall be provided with drip tray and drain valve. Electrical junction box shall be provided for each valve stand and the valve stand shall be pre-wired upto junction box.

2.04.06.05 Valves, in general, shall be kept above high fluid level of reservoir except where the functions of the valves require them to be below the fluid level.

2.04.06.06 Sub-plate mounted valves with 'O' rings shall have locating pins or non-symmetrical bolts holes for fool-proof mounting.

2.04.06.07 Direction control valves shall be selected for maximum 5 kg/cm2 (P to A & B to T taken together) pressure drop for blind end flow.

2.04.06.08 Speed control valves shall be selected for maximum 5 kg/cm2 (maximum open condition) pressure drop.

2.04.06.09 Total pressure drop in any circuit including manifold block of valve stand, for the flow indicated for the circuit shall not exceed 15 bar. Pressure drop shall be measured by short – circuiting A & B ports by providing pressure gauges at P & T lines and measuring flow by a digital flowmeter.

2.04.06.10 Internal leakage line from valves shall be separately drains to reservoir.

2.04.06.11 Each solenoid of solenoid operated valves shall be identified. The same identification number shall be put in both electrical and hydraulic diagrams, for a particular solenoid.

2.04.06.12 Solenoid operated valves shall incorporate the following features:

a) Suitably sealed solenoid enclosure to prevent the entrance of splashing liquids and airborne contamination.

b) Sufficient internal space to incorporate 150 mm leads and taped joints.

c) Manual over-rides which can be operated without removing the solenoid covers but which cannot be operated accidentally.

d) Solenoids shall be continuous duty type.

e) Solenoid indicating lamps.

f) Solenoid valves shall be suitable for 24 V DC.

g) Solenoid valve electrical leads shall be equipped with vibration proof and weather proof plug type connectors for ease of replacement and maintenance.

h) Pilot controlled solenoid operated valves shall be provided with pilot chokes (to control speed of main valve shift to reduce shock).

i) Identification marks stating manufacturer's name, type, rating, model no., port size etc. for valves.

© 2022 MECON Limited. All rights reserved.

2.04.06.13 The proportional and servo valves shall be suitable for 24 V DC input & 4-20 mA signal to PLC. The proportional valves shall be provided preferably with manual override.

2.04.06.14 All isolation valves on oil lines for tank unit, pump units, circulation units, return line filter unit, accumulator stands and valve stands shall be plug/ball type valves of cast/forged steel. The pump suction line isolation valves may be butterfly type for space constraint. The isolation valves on cooler water lines shall be gate valves of cast/forged steel.

2.04.07 Hydraulic Cylinders

Hydraulic cylinders shall be designed to meet the working pressure of the system and tested to a minimum of 150% of nominal design pressure.

Hydraulic cylinders shall have appropriate cushioning to avoid shock at extreme ends. Port connection on cylinder shall be BSP thread / SAE mating flanges.

2.04.08 Hydraulic Motors

Hydraulic motors shall be designed to meet at least 125% of normal output torque and 125% of the maximum system pressure. The hydraulic motors shall be designed with adequate hydraulic protection circuit such that it will not be overloaded under all conditions of operation of equipment which is actuated by motor.

Hydraulic motors shall be mounted on a rigid base plate or shall be flange mounted such that they are capable of withstanding the hydraulic shocks likely to be imposed. It shall be connected to the driven equipment with a suitable coupling / transmission device.

Where possibility of over-running and complete stalling of hydraulic motor is present, suitable relief arrangement shall be provided to allow oil to circulate freely without overheating the fluid.

Suitable case drain line shall be provided for efficient lubrication of internal moving parts of hydraulic motor. The drain line shall be generously sized and shall be connected separately to tank to avoid back pressure.

2.04.09 Contamination Analysis Kit

One (1) no. Portable Contamination Analysis Kit with print out facility for assessing cleanliness of hydraulic oil for each area shall be supplied.

2.04.10 Portable Filter Pump Unit

This unit shall be complete with motorised pump and filter to fill the oil in the system tank from oil barrels. The unit shall be trolley mounted complete with 15 m long cable and 5 m suction & 15 m discharge hose. Rating of the filter shall be same as that of recirculation filter cooler unit.

© 2022 MECON Limited. All rights reserved.

2.04.11 Portable Nitrogen Booster Unit / Portable Nitrogen Compressor (If system pressure exceeds 120 bar)

The mobile oil driven mobile nitrogen booster unit shall be equipped with tank, pump-motor, filter, relief valve, cylinder, pressure switch, pressure gauge, shut-off valve, check valve, appropriate connections for nitrogen bottle / accumulator stand. Alternatively, nitrogen compressor for boosting nitrogen pressure for filling high pressure nitrogen in accumulators can be provided if the charging pressure is more than 100 bar. Portable Nitrogen Booster Unit / Compressor shall be complete with 10 mtrs long suction hose & 15 mtrs delivery hoses and electrical cables (15 mtrs) with plug.

2.04.12 Mobile Vacuum Dehydrator Unit – 1 No. / Mobile electrostatic Oil cleaner – 1 No. for each area, as applicable shall be supplied

One mobile vacuum dehydrator of 200 LPH capacities shall be provided for each area. Mobile vacuum dehydrator shall be capable of removing water and maintain 3 micron filtration level.

One (1) no. Mobile electrostatic cleaner for each area (as applicable) shall be included for Hydraulic systems having servo valves & high generation proportional valve for cleaning the oil periodically and maintaining desired NAS class level of Hydraulic oil. Electrostatic oil cleaner shall be capable of removing particles upto 0.5 micron size from oil.

Both the units shall be complete with long suction (10 mtrs) & delivery (15 mtrs) hoses and electrical cables (15 mtrs) with plug suitable for 4 wire supply.

2.04.13 Hydraulic Test Bench – (If required)

One (1) no. of full fledged hydraulic test bench for testing hydraulic pumps, valves, hydraulic components, cylinders, motors, etc. shall be supplied for each area.

2.04.14 Test Kits for Proportional & Servo Valves

One (1) no. test kit for proportional and servo valves shall be supplied, if applicable.

2.04.15 Sump Pump & Monorail with Hoist for each Hydraulic Room

Minimum one (1) no. of sump pump (Approx. 10 m^3/hr) shall be provided for sump pit inside each hydraulic room. Each sump pump shall be provided with level switch, isolation valve, check valve and pressure gauge at the discharge side of pump for draining outside the hydraulic room. Discharge line shall also have a separate line having isolation valve for filling oil barrel in case of oil spillage in hydraulic roomof sump pump.

Monorail & hoist shall be provided in each hydraulic room for transporting motor / pump etc. from individual power unit to a place for taking it out of hydraulic room.

đ 2022 MECON Limited. All rights reserved.

2.05 INTERCONNECTING PIPING

2.05.01 All hydraulic pipes shall be Stainless Steel, seamless type & fittings shall also be of stainless steel. However, water pipe from main header to cooler shall be of carbon steel and accordingly fittings also shall be of carbon steel.

2.05.02 Hydraulic pipelines shall be adequately sized. The size of hydraulic pipes shall be such that the velocity of fluid in pipeline shall be as follows:

For hydraulic pressure line	:	Velocity approx. 4.0 m/sec line up-to 150 bar pressure
For hydraulic pressure line	:	Velocity approx. 4.5 m/sec line above 150 bar pressure
For tank return line	:	Velocity approx. 2.0 m/sec
For suction line	:	Velocity approx. 0.5 m/sec
For circulation line	:	Velocity approx. 1 to 1.5 m/sec

2.05.03 For hose, the bursting pressure shall be not less than 5 times the maximum working pressure of the system. All the hoses in hot area shall be with stainless steel braided cover and silica cloth cover.

2.05.04 Specification of Pipes & Fittings

2.05.04.01 <u>Carbon Steel (For heat exchanger water line)</u>

I. All tube / pipe sizes should be as given in schematic drawing to be of following specification.

a) Up to 38 OD for all lines - Seamless tubes to DIN 2391-Part – 2, 1994 and 37.4 NBK to DIN 1630 – 1984

b) Above 38 mm OD size - Seamless schedule 40 black pipe of ASTM – A106 Gr. B – 94 and Dim as per ANSI B 36.10 – 1995

II. Fittings should be of following specification:

a) Pipes upto 38 mm OD size - Welding nipple with 'O' ring CS to 14C14S14 of IS: 1570 (Part III)-1979

b) Above 38 mm OD size

i) Upto 50 NB - Socket weld fittings of 3000 # rating to ASTM – A-105 -1994 and Dim as per ANSI B 16.11 – 1991

ii) Above 50 NB - Butt weld fittings of ASTM – A-234 WPB – 1994 AND Dim. As per ANSI B 16.9 -1993 of schedule same as per that of pipe

đ 2022 MECON Limited. All rights reserved.

III. Flanges should be of - Slip-on flanges of ASA 150 following specification class for return and drain. ASTM – A – 105 - 94. Dim. as per ANSI – B - 16.5 - 1988.

For slip-on flange raised face flange electrogalvanised hexagonal head screw & hexagonal nuts shall be used. Grade of hexagonal head screw shall be 8.8 and that of nut shall be 8.

IV. Shut – off / Isolation valves should be of following specification:

Ball valves (150 class) with SS internals upto 50NB – socket weld type and above 50 NB – with flanged (ASA 150 class ends).

2.05.04.02 Stainless Steel

I. All tube / pipe sizes should be as given in schematic drawing to be of following specification.

a) Up to 38 OD for all lines - Seamless tubes to DIN 17458-1995 with material no. 1.4541 and condition-h and dim. as per DIN 2462, part –I-1981

b) Above 38 mm OD size

i) Suction, return & drain lines - Seamless schedule 40 pipe as per ASTM – A-312-TP304-1995 and dim. as per ANSI-B-36.19-1985

ii) Pressure lines - Seamless schedule 80/160 pipe to ASTM – A-312-TP304-1995 and dim. as per ANSI-B-36.19-1985

II. Fittings should be of following specification:

a) Pipes upto 38 mm OD size - Welding nipple with 'O' ring DIN 17440-1985 with material no. 1.4541

b) Above 38 mm OD size

i) Upto 50 NB - Socket weld fittings of 3000/6000# rating to ASTM – A-182-F304-1996 and Dim as per ANSI B 16.11 – 1991

ii) Above 50 NB - Butt weld fittings of ASTM – A-403- WP304-1996 and Dim. to ANSI- B - 16.9 -1993 of schedule same as that of pipe.

III. Flanges should be of following specification:

a) Upto 80 NB in all lines - SAE 4 bolt socket weld type of 3000# rating with O-rings in low /

đ 2022 MECON Limited. All rights reserved.

medium pressure line and 6000 # rating in high pressure lines.SS-304.

b) Above 80 NB in suction - Slip-on flanges of ASA 150 class for return and drain. SS-304. Dim. as per ANSI-B-16.5-1988.

All terminations should be terminated by mating flanges suitable for incoming/outgoing pipe sizes. The P -T- L headers in valve stands, one end should be provided with mating flange and other end with blind flanges.

For SAE flange SS socket head screw & hexagonal nuts and for SAE flange SS socket head screw & hexagonal nuts shall be used.

IV. SS-304 Shut – off / Isolation valves should be of following specification:

a) Suction, return & drain lines (150 class)

Upto 50NB	-	Socket weld type and
Above 50 NB	-	With flanged (ASA 150 class ends)

b) Pressure lines - SS-304 Ball valves of adequate rating

V. At pump delivery and in pressure lines near cylinders, hoses of suitable SAE 100R 2/9/11 with female swivel BSP crimp end fittings to be used.

VI. TIG (Argon) welding should be done at all pipe joints which are butt – weld. Full TIG (Argon) should be for upto 38 mm OD tube. Above 38 mm OD size, only root welding shall be by TIG and further welding by normal welding.

VII. After fabrication, all SS pipes to be cleaned, degreased and flushed with oil.

VIII. All pipelines to be clamped with polypropylene heavy series clamps at regular interval and locations to avoid hydraulic shock during operation. For hot area, aluminium type clamps shall be used.

IX. All necessary interconnecting piping between various units i.e. tank, accumulator stand, pumping unit and valve stands and between valve stands and equipment shall be provided. The interconnecting piping shall consist of high pressure hoses, pipes/tubes, welded nipple type with O-ring type fittings, SAE four bolt flanges, heavy duty PP clamps, etc.

2.06 FIRST FILL & FLUSHING OIL

Scope of supply shall include flushing oil and first fill of hydraulic oil in required quantity (Tank, pipeline & components) as defined in Contract.

đ 2022 MECON Limited. All rights reserved.

2.07 ERECTION, TESTING AND COMMISSIONING

2.07.01 All components and equipment shall be cleaned, both externally and internally, as mentioned in the equipment Tenderer's manuals for erection and maintenance.

2.07.02 Hydraulic pipework shall be assembled, tested, pickled, flushed and commissioned as per piping instructions submitted by Tenderer's according to their standard practice.

2.07.03 Installation, testing & commissioning of electrical systems associated with hydraulic system shall conform to General Technical Specification and electrical chapter of this TS.

2.08 SPARES

2.08.01 Commissioning spares

Adequate quantity of: 'O' ring & seal kit for hydraulic components, 'O' ring for fittings used, solenoid coils, plug-in connectors, hose, minimess hose and filter elements for various grade & type of filters shall also be included in commissioning spares to take care till successful commissioning (as defined in contract).

Any items required for commissioning but not included in commissioning spare shall also be supplied at no cost implication to Customer.

2.08.02 2-years spares

A list of 2-years spares based on Tenderer's past experience shall also be furnished.

2.09 INSPECTION AND TESTING

2.09.01 All hydraulic systems / components shall be inspected and tested at the manufacturer's premises by the Employer/Consultant as per approved QAP by Consultant. Performance tests for hydraulic systems/equipment shall be carried out at site along with the operation of the main equipment to which the hydraulic system shall be connected, to check the flow rate, pressure and temperature of hydraulic fluid, pressure drop across filters & cooler, power consumption by electric motors etc. as well as proper functioning of the main equipment as per the requirement of conditions of Contact.

However, QAP shall generally comprise of the following:

	Test	Acceptance Criteria
a)	Hydrostatic test of tank	NO BULGING / NO LEAKAGE
b)	Load test of pump for 30 minutes At system working pressure	NO LEAKAGE
c)	Hydrostatic test of all units except tank for 15 minutes at 1.5 times system working pressure	NO LEAKAGE

đ 2022 MECON Limited. All rights reserved.

d)	Internal leakage of pumps at system working pressure (for axial piston pumps only)	As per Tenderer's engineering data sheet
e)	Pressure drop across filters, coolers (oil side)	As per approved schematic
f)	No load current of electric motors	Below rated current as per test certificate
g)	Full load current of electric motors	Below rated current as per test certificate
h)	Testing of operation / function of temperature switch, level switch and pressure switch by multimeter	NO DEVIATION
i)	Internal leakage of pumps at system working pressure (for axial piston pumps only)	As per Tenderer's data sheet
j)	Operation / function of all the components	As per approved schematic
k)	Pressure drop across each hydraulic valves	As per approved schematic
l)	Operation / function of solenoid valves	NO STICKING
m)	Operation / function of P.O. check valves	NO STICKING

2.10 PAINTING

All components of the hydraulic system and interconnecting piping shall be painted as per Painting Specification GS –08(GTS).

2.11 DRAWINGS AND OTHER DOCUMENTS

2.11.01 Drawing and technical information shall be furnished in according to technical specification. Following types of Drawing and technical information shall be provided.

2.11.02 Block diagram of system.

2.11.03 Hydraulic circuit drawings for each tank unit, main pumping unit, circulation pump-filter-cooler unit, return line filter unit, accumulators stands, valve stands upto actuators showing each component of respective unit, including all

đ 2022 MECON Limited. All rights reserved.

interconnecting lines by means of approved graphical symbols with parts list indication in BOM with complete specification, size, pressure rating, material, model No., make, quantity etc. of each item.

2.11.04 General arrangement drawings for tank unit, main pump-motor unit, circulation pump-motor-filter-cooler unit, return line filter unit, accumulator stands and valve stands.

2.11.05 General arrangement drawings for the hydraulic cellars / rooms.

2.11.06 Interconnecting piping drawing from hydraulic room to valve stand and from valve stand to consumer points.

© 2022 MECON Limited. All rights reserved.

3.00 OIL LUBRICATION SYSTEMS & INTERCONNECTING PIPING

3.01 SCOPE

3.01.01 This general specification covers the lubrication systems required for various units. The term 'lubrication systems' referred herein covers all types of lubrication systems including but not limited to centralized oil and Air-oil lubrication systems, including interconnecting piping and electrical control panel, positive force-feed lubricators, various types of oilers and manual devices. The term also covers components of centralized circulating systems for indicating, recording and integration of various parameters such as pressure, temperature, velocity etc; control devices for manual and automatic operation of the systems, safety devices and alarms for abnormal operating conditions; interlocks for sequencing and safe operation; hand-guns and other appliances for manual lubrication and lubricating media.

Scope of work shall also include supply of equipment, piping, initial fill & consumables, erection & commissioning of all equipment of oil lubrication systems including interconnecting piping.

3.01.02 The selection, design and construction of the systems shall be suitable in every way for the service intended and shall be oriented towards maximizing interchangeability of components and minimising maintenance. Each system shall be complete in all respects including all accessories essential for proper installation, operation and maintenance, irrespective of whether such items are specifically mentioned in the Technical and General Specifications.

3.02 STANDARDS

3.02.01 The lubrication systems shall be designed, manufactured, erected, tested and commissioned as per the standards laid down in this specification. Detailed instruction on such aspects as are not indicated herein shall be as per the codes and practices adopted by the Indian Standards (IS) wherever available or American Society of Lubrication Engineers or as per the standards of the national standards institution of the country of origin or the codes of practices followed by the manufacturer. These shall be clearly indicated by the contractor and Purchaser's prior approval shall be obtained. Wherever standards other than IS are used/referred, the contractor shall indicate the equivalent IS.

3.03 DESIGN BASIS

3.03.01 General

3.03.01.01 The design should ensure that the components of the lubrication systems are compatible with the lubricant selected, at the operating conditions in the plant and under climatic conditions prevalent at site. In selecting the lubricant, the operating temperature of system shall be given careful consideration; and oil viscosities shall always be related to operating temperature.

3.03.01.02 Details concerning each lubricant shall be furnished in the form of a chart, indicating system reference, consuming point references, location of system, type of lubricant, ISO viscosity grade, manufacturer's code number for fluid type & grade and quantity for first fill of system including interconnecting piping. Wherever possible, equivalents with due regard to local availability shall be mentioned.

đ 2022 MECON Limited. All rights reserved.

3.03.01.02 Design velocity shall be at the range of 1 to 3 m/sec (max) on discharge side of pumps and on oil feed lines.

3.03.02 Lubrication Circuits

3.03.02.01 Each circuit shall be designed so as to ensure adequate supply of lubricant at the specified temperatures and pressures for the relevant application. Each system shall be designed taking into account the maximum pressures encountered in operation.

3.03.02.02 Each circuit shall incorporate a reservoir of adequate capacity for lubricant with accessories, pumping equipment, filters to eliminate undesirable particulate contaminants, adequate cooling system to cool the return lubricant where required, pressure tanks where necessary, adequate heating system to adjust the viscosity of supply lubricant, generously sized pipework, accessories and hoses, and all necessary audio-visual alarms such as those for lubricant temperature in reservoir, levels of lubricant in reservoirs, pump discharge pressure, low lubricant flow, filter clogging, return lubricant temperatures etc. Unless otherwise specified, lubrication equipment for centralized systems located in unattended areas, basements etc. shall have remote control facilities to ensure safety of the main equipment served by such lubrication systems.

3.03.02.03 The circuits shall incorporate necessary stand-by units, bypasses, isolation devices etc. to ensure continuous operation of the systems even when some components are under maintenance, cleaning or repair.

3.03.02.04 The circuit design shall incorporate necessary connections, valves and appurtenances to facilitate testing, pickling, flushing, draining and commissioning the systems.

3.03.02.05 Design of each circuit shall be such as to achieve quick response to functional needs, economic operation of the system and minimum maintenance. The circuit design shall also ensure safety of the staff and of the equipment served by the lubrication system, in case of emergencies such as power failure, bursting of hose or pipe connections, opening of safety valve or other devices.

3.03.02.06 Oil sampling outlets with isolating valves shall be provided at suitable locations in the system.

3.03.03 Centralized Oil Lubrication System

3.03.03.01 Oil lubrication system shall be used when it is necessary:

a) To remove heat from the friction surfaces and to ensure fluid film condition.

b) To create a high hydro-dynamic pressure which ensures separation of the sliding surfaces in fluid film condition.

c) To lubricate rolling contact bearings which work for long periods at high speeds.

d) To have, besides lubrication, intensive cooling of the friction surfaces.

e) To lubricate gears and worms (with the exception of very slow running and briefly operating mechanism).

đ 2022 MECON Limited. All rights reserved.

3.03.03.02 Centralized oil lubrication systems shall be provided for applications where lubrication is needed for a large number of use points which are located reasonably close and needing the same grade of oil lubricant.

3.03.03.03 Each centralized oil lubrication system shall incorporate oil reservoir of adequate capacity, pump with electric motor, stand-by pump with motor, duplex pressure filters (one working, one standby), oil cooler, pressure tank, valves, pipes, hoses, tubes and all necessary instruments and controls and suitably designed dust and moisture proof control panel.

3.03.03.04 In systems where contamination collected by the lubricating oil is expected to be high and systems where ingress of water in oil is high (e.g. Morgoil Systems & no-twist mill systems), two identical reservoirs shall be provided so that while one tank shall be in operation, the oil in the other tank shall be centrifuged / vacuum dehydrated and ultimately cleaned to requisite level. Centrifuge / Vacuum dehydrator shall be permanently connected to the tanks of such systems. The number of centrifuges for each system shall be as described in clause no. 3.04.09 below.

3.03.04 Centralized Air-oil Lubrication System

3.03.04.01 Centralized air-oil lubrication system shall be used for lubrication of following equipment and other equipment as per tenderer's design:

a) To lubricate machinery components such as bearings, sliding surfaces which require fine film lubricant.

3.03.04.02 Centralized air-oil lubrication system shall include oil reservoir with all accessories, pumps with standby pump, electric motor, duplex filters (one working + one standby), pressure gauge, pressure switch, relief valve on downstream side of each pump, progressive, primary & secondary distributor blocks, air line isolation valve, filter, regulator with pressure gauge, pressure switch, solenoid valve, flow control valve, pipes & fittings, electrical control panel etc.

3.03.05 Other Lubrication Facilities

3.03.05.01 Isolated lubrication points, needing oil lubrication continuously, shall be provided with sight feed lubricators.

3.03.05.02 The connector for the hand lubrication device shall suit connections provided at the lubrication points.

3.04 EQUIPMENT (UNITS OF OIL LUBRICATION SYSTEMS AND OTHER FACILITIES)

Centralized lubrication systems will be provided for bearings and gears of drive gearbox. The system shall consist of the following.

- Reservoir.
- Screw pumps with internal relief valves.
- Plate type heat exchanger.
- Filters.
- Immersion heater.

© 2022 MECON Limited. All rights reserved.

- Pressure vessel.
- Pressure reducing valves.
- Indicating and control instruments near consumer points.
- Interconnecting piping - Carbon steel piping except at wet area, which shall be stainless steel.
- The system shall consist of the items given below:

3.04.01 Reservoir

All systems shall have dedicated reservoir complete with all the accessories i.e. breather, tube type level gauge, sampling valve, etc. and instruments i.e. level switch, thermometers, temperature transmitters, water sensor, etc. Necessary electrical heaters shall be provided.

Normally one no. of tank shall be used for each lubrication system but lubrication system where water ingress is more i.e. Morgoil / NTM, etc. one working & one standby shall be provided.

Necessary nozzles with isolation valves shall be provided in the reservoir for connecting vacuum dehydrator.

3.04.01.01 For gear oil lubrication systems for rolling mills etc. where contamination and muck is expected to be high, the useful capacity of reservoir shall be equal to 30 minutes total pump flow. In case of Morgoil bearings & no-twist mill bearings of rolling mills, the useful capacity of reservoir shall be equal to 50 minutes total pump flow. For bearings of electric motor, steam turbine and gas turbine, the useful reservoir capacity shall be equal to 5 to 10 minutes pump flow. The total volume of reservoir shall be 15 per cent to 20 per cent more than the useful volume, which will remain as free air space. The reservoir shall be rectangular type and shall be generally proportioned as length: width: height = 2:1:1, unless economics or standardization dictates other proportions.

However, in case of tank having capacity less than tenderer shall show sufficient proof from their customer regarding satisfactory operation of complete unit alongwith tank.

đ 2022 MECON Limited. All rights reserved.

3.04.01.02 The reservoir shall be designed and constructed to prevent entry of foreign matter including water. Reservoirs shall be separate and removable from the equipment base. Material for reservoir shall be carbon steel / stainless steel.

3.04.01.03 A 3-compartment arrangement shall preferably be used in reservoir construction. While one compartment shall be used for sucking of oil, the other two compartments shall be used for return oil and for settling of water and other solid contaminants from the oil. The volume of return chamber, settling chamber and suction chamber shall have a ratio of 1:2:1. The suction chamber containing clean oil for circulation shall be provided with a float suction in addition to deep suction.

3.04.01.04 The reservoir shall be sub-divided into compartments by providing baffle plates inside the reservoir across the width of the reservoir. Necessary coarse strainers shall be provided inside the reservoir along the baffle plate so that when the return oil flows from return chamber to middle chamber of the reservoir, coarse particles are removed.

3.04.01.05 All reservoirs shall have provision for lubricant filling and air breathing, separately. The filler nozzle/ port shall have a filter for filtering the lubricant during filling and shall be fixed with fasteners requiring hand tools for opening. Filler nozzle/ port shall be provided with caps or covers permanently attached to the reservoir by suitable means. Combination breather and filler assemblies shall not be used. Breather nozzle/ port shall be provided and protected by air cleaner(s) containing indicative type silica-gel for moisture trapping. The air cleaner(s) shall be of sufficient capacity to maintain approximate atmospheric pressure inside reservoir even at maximum demand of the lubrication system. The number of air breathers shall depend on the capacity of the reservoir and the capacity of the pumps.

3.04.01.06 An additional nozzle connection of suitable size shall be provided in the reservoir for external filling line, but plugged for shipping. Fresh oil shall be filled to the system tank by a mobile filling pump having adequate rating (maximum rating of system filter) filter alongwith hoses, etc. Reservoirs shall be designed for adequate heat dissipation by generously proportioning the reservoir wall surface and shall be installed as to allow unhindered air flow over all surfaces - sides, top and bottom. Return fluid shall have peripheral flow along reservoir side wall from suitably bevelled cut pipe.

3.04.01.07 Suitable dial thermometers protected and mounted in a bulbwell shall be installed in the suction and return chambers of the reservoir with at least 150 mm immersion length. Thermostats / temperature transmitter shall be provided in the reservoir for high temperature alarm in case temperature of oil in reservoir exceeds the set value and for controlling tank heaters. Signal from temperature transmitter shall be accessible to main control room for on-line temperature measurement and for auto ON/OFF of heaters.

3.04.01.08 When reservoirs are placed on civil foundation, the bottom of the reservoir shall have a minimum clearance of 150 mm from the floor.

3.04.01.09 The reservoir shall be provided with tube type protected level indicator. Acrylic Borosilicate glass shall be used for level indicator. The level indicator shall be provided with isolation valves with limit switches and drain valve. The level indicator shall be provided with calibrated scale with markings to show ‘high’ and ‘low’ levels with pump running and, where necessary, ‘high’ level with pump

©2022 MECON Limited. All rights reserved.

stoppage. The tube type or flush type level indicators shall cover the entire height of the reservoir.

3.04.01.10 Tube type level indicators shall be provided with necessary switches for high level alarm and filling pump cut-off, low level alarm and low-low level alarm & main pump cut-off.

The level switches shall be mounted externally to the reservoir. Wherever required, level transmitter shall be provided in the reservoir for signal transmission to control room, for on-line monitoring of level.

3.04.01.11 The suction pipe to pump shall be below the low-low level of fluid in the reservoir, to avoid cavitation. The return oil pipe, the relief return pipe and the fresh oil filling line shall be brought down below the low-low level of fluid in the reservoir to avoid aeration. The return oil pipe and relief return pipe shall be located in the return chamber of the reservoir and shall be provided with bevelled cut pipe for smooth flow. The return oil pipe and relief return pipe shall always be located away from suction pipe (preferably in different compartments of the reservoir) for efficient and smooth operation.

3.04.01.12 The return oil from gear boxes and bearings shall drain by gravity to the reservoir. Return lines shall slope down to the reservoir at about 3 to 4 per cent preferably, to the horizontal depending on specification of oil used in the system based on tenderer practice.

3.04.01.13 Provision shall be made for efficient cleaning of reservoir. Suitable square or rectangular openings with hinged covers shall be provided on top of tank. Similarly, suitable square or rectangular openings with oil tight covers shall be provided in each compartment of the reservoir, at the side walls, flushing with tank bottom plate to facilitate tank cleaning. The top openings shall be suitably located for entry to each compartment of the reservoir for cleaning. Openings shall be suitable for man entry. Suitable opening with cover shall also be provided on top of tank, along the width, for taking out tank strainers and maintenance. For bigger tanks, tank top opening shall be with ladder.

3.04.01.14 The reservoir bottom shall have about 4 per cent slope towards drain. The drain shall be piped out for further disposal. The drain connections of the reservoir shall be provided with isolating valves. For each compartment of the reservoir, at least one drain connection shall be considered.

©2022 MECON Limited. All rights reserved.

3.04.01.15 Reservoirs shall be fabricated from steel / stainless steel of suitable grade, having thickness depending on capacity of reservoirs. The thickness of plate for reservoirs shall generally be as follows:

Capacity of Reservoir in m^3	Thickness of side plates	Thickness of bottom plate
Upto 3 m^3	5 mm	5mm
5 to 10 m^3	6 mm	6 mm
10 to 35 m^3	8 mm	10 mm
35 to 90 m^3	10 mm	12 mm

Necessary stiffening plates / channels shall be provided on the external surface of the reservoir. Interior surface of the reservoir shall be sand blasted, cleaned and coated with copaphen aluminium

3.04.01.16 Lubricant return to the reservoir shall preferably be through horizontal lines directed over a combination of trays and screens of suitable mesh size to eliminate turbulence and help defoaming of the lubricant. Spill from relief valve and other pressure regulators which are free of air and contaminants shall be discharged 150 mm or more below lubricant level and away from pump suction to avoid splashing. The return flow from separate lubricant purification systems shall also be discharged 150 mm or more below lubricant level.

3.04.01.17 Pump suction opening shall be placed such that bottom of suction pipe is at least 150 mm to 200 mm above the tank bottom to prevent dirt or water pick up. The suction opening must be kept well below the low-low level of lubricant (minimum 100 to 150 mm) to avoid air entry and cavitation. When lubricant level varies widely, a floating suction shall be used to meet the requirement.

3.04.01.18 Necessary sampling connection with valves shall be provided in each compartment of the reservoir. Necessary water detecting units shall be provided in the reservoir for Morgoil and No-Twist Mill Oil lubrication systems for giving signal to start centrifuge / vacuum dehydrator in auto mode.

3.04.01.19 The filling of fresh lubrication in the reservoir shall be locally by a mobile pump filter unit from ± 0.00 level. The spent lubricant from the reservoir shall be dumped to the spent oil tank in oil cellar. The pumping unit at spent oil storage system shall be used to dispose oil in drums/oil tanker at ± 0.00 level. For small lubrication systems, the system pumps shall be used for unloading the spent lubricant from the reservoir. For large gear oil / Morgoil / No-Twist Mill lubrication systems a separate spent oil pump shall be provided for unloading the lubricant from the reservoir. Necessary nozzles shall be provided in the reservoir for connecting spent oil pump.

3.04.01.20 Necessary nozzles shall be provided in the reservoir for connecting centrifuge/vacuum dehydrator etc.

©2022 MECON Limited. All rights reserved.

3.04.01.21 Necessary ladders shall be provided outside as well as inside the reservoir for climbing on top of the reservoir and for going inside the reservoir respectively, during maintenance.

3.04.01.22 Reservoir shall be provided with electrical junction box and shall be prewired upto junction box.

3.04.02 Pumping Unit

3.04.02.01 Pumping units shall have floor mounted triple screw pump. Pumps shall be triplex screw pumps with built-in relief valve, coupled to electrical motor with flexible coupling and coupling guard. RPM shall be 1450. Electrical motor shall have 25% additional power than that required for designed pump discharge and flow.

Pumps shall be designed for 20% over requirement. Electrical motor shall have VVVF control if desired by process, thus in this case system pressure of lubrication system shall be controlled by VVVF drive.

3.04.02.02 One (1) operating and one (1) stand-by pump units shall be provided. For very large gear oil / No-Twist Mill / Morgoil lubrication systems, two (2) nos. working pumps shall be provided. In such system a minimum of 50% stand-by pump shall be provided. Stand-by units shall be piped to the system. Instruments and controls for the system shall ensure that the stand-by pump shall automatically start in sequence in case of failure of any one of the operating pumps. The failure of any one of the pumps shall be indicated by audio-visual alarms, located on the control panel.

3.04.02.03 Pumps shall preferably be floor mounted on base frames with flooded suction and shall not be mounted inside reservoir or on top of reservoir without specific approval of purchaser.

3.04.02.04 Flexible shaft couplings complete with coupling guards shall be provided between the pump and motor. The type of coupling shall be suitable for the application.

3.04.02.05 Pumps shall be provided with stainless steel compensator and isolation valve with limit switch on the suction side and relief valve, check valve, isolation valve on the discharge side. Combination type of valve instead of isolation and check valve on discharge side can also be used. Necessary pressure gauge shall be provided on the downstream side of each pump and pressure switches shall be provided on the common header on the discharge side of pumps for low pressure alarm and for automatic starting of stand by pump in case of failure of working pump. Necessary pressure transmitter shall be provided with signal accessible to main control room for online pressure measurement, as per process requirement.

3.04.02.06 On the downstream side of pumps, a by-pass line with a globe valve shall be provided, for closed circulation during cold starting in peak winter season and for stabilizing the temperature of tank during cold start.

đ 2022 MECON Limited. All rights reserved.

3.04.02.07 The mounting surface provided for a separate pump and motor shall be rigid and shall prevent coupling misalignment due to work load and temperature variations. Flexible couplings shall be used between the motor and pump, and be of a type suitable for the application. An approved detachable safety guard shall be fastened over the coupling and equipped with a hinged section to facilitate lubrication.

3.04.02.08 The pump-motor unit shall be provided with drip tray and drain valve. Each pump-motor unit shall be provided with electrical junction box and shall be prewired upto junction box.

3.04.03 Heat Exchanger & Heaters

3.04.03.01 Heat exchanger shall be of plate type for indirect cooling of oil with water and shall be installed in oil supply line to consumers. This shall be capable of keeping the oil temperature in the supply line to consumers within desired limit. This shall be equipped with necessary valving, instruments and controls.

Heat exchanger shall be designed considering water inlet temperature of 35°C. Heat exchanger shall have 20% built-in spare capacity.

3.04.03.02 Heat exchanger shall be provided with the following:

a) Isolation valves on heat exchanger water inlet and outlet lines.

b) Isolation valves on oil inlet and outlet lines from heat exchanger and on the bypass line across heat exchanger.

c) Pressure gauge and temperature indicators on heat exchanger water inlet & outlet lines.

d) Temperature indicators on oil inlet and outlet lines.

e) Pressure check minimess couplings on oil inlet and outlet lines for checking pressure drop across heat exchanger.

f) Basket type filter of 100-150 micron fineness on water inlet line.

g) Necessary control valve with controller on water inlet line for automatic control of water flow. Control valve characteristic shall be such that to suit process requirement. Globe valve shall be provided on by-pass line of control valve in case manual control is required due to non-functioning of control valve.

3.04.03.03 Heat exchanger shall be fitted external to the reservoir and shall be mounted on a frame with drip tray and drain valve. The heat exchanger unit shall be provided with electrical junction box and shall be pre-wired upto junction box.

3.04.03.04 The pressure drop across Heat exchanger on oil circuit shall be less than one (1) bar and on water circuit shall be less than 0.5 bar, generally.

3.04.03.05 Heaters shall be used in the reservoir of the lubrication systems if the viscosity of the lubricant under ambient conditions would affect the system operation adversely under all operating conditions.

3.04.03.06 Heaters shall preferably be of the electrical type, having heating intensity of not more than 0.8 watt per sq. cm. In case oil specification demands less than 0.8 watt per sq. cm heating intensity than in direct heating of oil shall be done by using

đ 2022 MECON Limited. All rights reserved.

heaters shell filled with thermal oil and heaters shall be immersed in it. Adequate support of heaters / heaters shell with heater shall be done inside tank which shall also take care of expansion of total assembly of heaters / heaters shell with heater.

3.04.03.07 Electrical heaters shall preferably be of the cartridge type**,** suitable for mounting in reservoir and thermostatically controlled**.**

3.04.04 Duplex Filter

3.04.04.01 Duplex filters of adequate rating shall be provided in the pump discharge line of each system. All the filters shall be duplex basket type / cartridge type (if required) with change over valves. All tanks / reservoirs shall have coarse stainless steel strainer in the tank return line chamber.

3.04.04.02 Duplex filters shall be in stages if the oil filtration level is less. Filters shall have 0.2 kg/cm2 pressure drop at 125% of rated flow. All the above filters shall have ß200.

3.04.04.03 The filters shall be equipped with differential pressure gauge cum switch, which will enunciate at the set differential. Once the selection is made to the clean filter, this annunciation will go off.

The filters shall have a differential relief valve at the bypass. The setting of valve shall slightly more than the setting of differential pressure gauge cum switch.

3.04.04.04 Pressure and return line filters shall be so constructed and installed that the filter element can be changed for cleaning or replacement without disturbing the piping or equipment operation. For this purpose, duplex filters (one working + one stand-by) shall be provided. All filters shall be provided with 3-way isolation valves across it and drain valves / drain plugs to facilitate maintenance of filters / filter elements. Necessary vent valves shall also be provided for filters.

3.04.04.05 Filter unit shall be provided with drip tray and drain valve. Electrical junction box shall be provided for filter unit. The filter unit shall be prewired upto electrical junction box.

3.04.05 Pressure Tank

3.04.05.01 All critical systems shall be provided with pressure vessels of adequate capacity to supply lubricating oil to the consumers in case of pump power failure / failure of working and stand-by pump for a period, as demanded by process. The stored oil in pressure vessel shall be supplied to consumer points by moisture free compressed air connected to pressure vessel. The pressure vessel shall be complete with solenoid operated air valves, control components, valves, instruments and air booster.

3.04.05.02 Pressure tank shall be provided with relief valve for protection against over pressure, pressure gauge, pressure switches, tube type level gauge to cover entire height of pressure tank, level switch, drain valve, flow gauge glass, man-hole with Davit, air line connection with filter, regulator with pressure gauge, lubricator, isolation valve, etc. Each pressure tank shall be provided with isolation valve on oil line.

3.04.06 Pressure Reducing Valve

đ 2022 MECON Limited. All rights reserved.

Suitable pressure reducing valves with necessary accessories i.e. pressure gauge on main line and branch line to various consumers shall be provided to keep the system pressure / individual consumer pressure constant even if the flow at consumer points varies.

3.04.07 Instruments at Consumer Points & on Main Line

Necessary pressure gauge, pressure switch (4-20mA) and flow switch (4-20mA) shall be provided in the supply line to individual consumer point such as gearbox and oil film bearings.

Temperature indicator and temperature switch (4-20 mA) shall be provided in the return line of oil film bearings.

Pressure gauge, pressure transmitter, temperature transmitter, etc. shall be mounted on main line going to various consumers.

3.04.08 Vacuum Dehydrator

Vacuum dehydrator of adequate capacity dedicated for each lubricating system shall be provided to keep the water and oil cleanliness level within the limit as dictated by process. In case of area where water ingress is more like that of Morgoil bearings & No twist mill bearing, 1 working & 1 standby vacuum dehydrator shall be provided. The vacuum dehydrator shall be capable of working with all types of lubricating oils having different viscosities to be used for various oil lubricating system. The capacity of Vacuum Dehydrator shall be generally be equal to capacity of tank divided by 15-20 hours approximately.

Each Vacuum Dehydrator shall be complete with electrical control panel and pre wired upto control panel. The Vacuum Dehydrator shall be mounted on a base frame with drip tray and drain valve.

3.04.09 Centrifuge

One (1) no. of centrifuge shall be provided for lubrication system where water ingress is more like that of Morgoil bearings & No twist mill bearing. Centrifuge shall be capable of removing dirt, dust & solid contamination alongwith oxidation products which forms sludge alongwith water. Capacity of centrifuge shall depend on system tank capacity. The capacity of centrifuge shall be generally be equal to capacity of tank divided by 15-20 hours approximately.

Each centrifuge shall be complete with electrical control panel and pre wired upto control panel. The centrifuge units shall be mounted on a base frame with drip tray and drain valve.

3.05 INTERCONNECTING PIPING

3.05.01 All necessary interconnecting piping between various units i.e. tank, accumulator stand, pumping unit and control valves shall be provided. Return line from gear box, etc shall have adequate slope for gravity drain to tank. The interconnecting piping shall consist of hoses, pipes / tubes, fittings, flanges, heavy duty PP clamps, etc as detailed out in general notes. Material for interconnecting piping & fitting shall be Carbon steel or Stainless steel based on system requirement.

3.05.02 Specification of Pipes & Fittings

© 2022 MECON Limited. All rights reserved.

I. All tube / pipe sizes should be as given in schematic drawing to be of following specification.

a) Pipe (450 NB & Below) - Seamless carbon steel pipes to ASTM A 106, Gr. B, Schedule 40, with plain / bevelled ends.

- Seamless stainless steel pipes to ASTM A 312, Gr. 304L, Schedule 40, with plain bevelled ends.

II. Fittings should be of following specification:

a) Forged fittings – Elbow, Tee, Reducer, etc.

50 NB & Below - 3000 lb forged carbon steel, ASTM A105, socket welded as per ANSI B 16.11.

- 3000 lb forged stainless steel A182, Gr. F304, socket welded as per ANSI B 16.11.

65 NB & Above - Seamless carbon steel, ASTM A-234, Gr. WPB, Schedule 40, Butt welded, Dimensions to ANSI B16.9.

- Seamless stainless steel, ASTM A-312, Gr. 304, Schedule 40, Butt welded as per ANSI B16.9.

b) Screwed fittings

40 NB & Below - 3000 lb forged carbon steel, ASTM A105, screwed as per ANSI B 16.11.

- 3000 lb forged stainless steel A182, Gr. F304, screwed as per ANSI B 16.11.

III. Flanges for all size - Forged carbon steel ASTM – A - 105 flange to ANSI-B-16.5, Class 150

- Forged stainless steel ASTM-A-182, Gr. F304 to ANSI-B-16.5, Class 150.

IV. Valves

- Shut – off / Isolation valves should be of following specification:

SIZE	STANDARD
Suction, Return and drain lines-	Ball valves with SS internals PN 16 of Cast / Forged steel. (Upto 40 NB – socket weld type & 50 NB and - with flanged (DIN PN16) ends).

đ 2022 MECON Limited. All rights reserved.

- Throttling (Globe valve) shall be of following specification

SIZE	STANDARD
50 NB and below	-Forged carbon steel globe valve, 800 Class with regulating type disc. MOC- Body ASTM A 105,trim ASTM A182,Gr. F6.Bolted bonnet, outside screw and yoke, rising stem, socket weld/screw end to ANSI B 16.11
65 NB and above	-Cast carbon steel globe valve, 150 Class with regulating type disc. MOC- Body ASTM A 216, trim ASTM A182, Gr. F6.Bolted bonnet, outside screw and yoke, rising stem, raised face, flanged ends to ANSI B 16.5

- Check valve

50 NB and below	-Class 800, Forged carbon steel lift check valve, body and cap material to ASTM A 105, trim ASTM material to ASTM A 182, Gr. F6. Bolted cap, socket welded / screwed ends to ANSI B 16.11 / Forged carbon steel lift check valve to IS: 10989
65 NB and above	-Class 150, cast carbon steel swing check valve, body and cap material to ASTM A 234, Gr. WPA, trim material to ASTM A 182, Gr. F6. Bolted cap, flanged ends with raised face to ANSI B 16.5 / cast carbon steel check valve to IS: 10989

V. Pipes shall be supported by U-Bolts.

VI. Hose assembly shall be to SAE or DIN standard for Lubricating oil service at specified working pressure, complete with reusable type end fittings at both ends and of required length.

VII. TIG (Argon) welding should be done at route run at all pipe joints which are butt – weld. Full TIG (Argon) should be for upto 1” NB tube. Above 1” NB size, only root welding shall be by TIG and further welding by normal welding. SS pipes shall be full TIG (Argon) welding.

VIII. After fabrication, all SS pipes to be cleaned, degreased and flushed with oil.

IX. All pipelines to be clamped using polypropylene clamps upto 1” NB. Above 1” NB electrogalvanised steel pipe clamps (U-Bolts) shall be used with at regular interval and locations. For hot locations aluminium type PP clamps shall be used. For high pressure lubrication system, heavy duty PP clamps shall be used.

X. All necessary interconnecting piping between various units i.e. tank, pressure tank, pumping unit and filter cooler units, spent oil pump unit and from cellar to

đ 2022 MECON Limited. All rights reserved.

equipment shall be provided. The interconnecting piping shall consist of pressure / high pressure (If used) hoses, pipes / tubes, SAE four bolt flanges, PP clamps, etc.

3.06 PAINTING

All components of the Oil lubrication system and interconnecting piping shall be painted as per Painting Specification GS – 08 (GTS).

3.07 INITIAL FILL & FLUSHING OIL

Scope of supply shall include lubrication oil to be used for First fill and for flushing (if used) in required quantity upto successful commissioning (as defined in contract), i.e., after commissioning all the system tanks, filter, accumulators and piping shall be full.

Qty. of flushing oil shall be sufficient to make the system ready for commissioning.

3.08 ERECTION, TESTING AND COMMISSIONING

3.08.01 All components and equipment shall be cleaned, both externally and internally, as mentioned in the equipment Tenderer's manuals for erection and maintenance.

3.08.02 Lubrication pipework shall be assembled, tested, pickled, flushed and commissioned as per piping instructions submitted by Tenderer according to their standard practice.

3.08.03 Installation, testing & commissioning of electrical systems associated with oil lubrication system shall conform to General Technical Specification and electrical chapter of this TS.

3.09 SPARES

List of commissioning spares shall be provided. Commissioning spares shall be supplied with the systems and it shall be part of the supply.

Any spares which is required during commissioning but not listed in commissioning spares shall be supplied free of cost to customer.

List of recommended spares for 2-years of operation shall also be provided. A separate price for these 2-years spares shall be indicated.

3.10 INSPECTION & TESTING

All Oil lubrication systems / components shall be inspected and tested at the manufacturer's premises by the Employer / Consultant as per approved QAP by Consultant. Performance tests for Oil lubrication systems / equipment shall be carried out at site along with the operation of the main equipment to which the Oil lubrication system shall be connected, to check the flow rate, pressure and temperature of lubricating fluid, pressure drop across filters & cooler, power consumption by electric motors etc. as well as proper functioning of the main equipment as per the requirement of conditions of Contact.

3.11 GENERAL INSTRUCTIONS

a) All the pipes and fittings etc. can also be seamless conforming to DIN standards, as applicable.

© 2022 MECON Limited. All rights reserved.

b) Oil tray should be provided for all individual skids.

c) Fixing of individual skids shall be with Hilti Bolts and shall be in tenderer's scope. Fixing of Hilti Bolts shall be with Hilti machines which shall be supplied in adequate number and maintained by tenderer.

d) All equipment shall be supplied with drives, associated electrics, instruments and control equipment, technological structures (if any), maintenance and working platforms, railing, safety guards etc.

e) Material handling facilities (monorail with hoist) for maintenance of all equipment shall also be a part of supply.

f) Any other equipment / part / facility not specifically mentioned in the specification, but is necessary technically or safety point of view for the satisfactory and smooth operation of the system shall also be included in the scope of the supply of the Tenderer.

g) There shall be properly identification of piping.

h) Air vents with plugs / valves shall be provided at proper places.

i) The Tenderer shall supply complete set of all the special tools and tackles including required number of tool boxes as required for erection, maintenance, overhaul or complete replacement of the equipment and components required for the offered system. All the tools shall be supplied in separate containers clearly marked with the name of the equipment they are meant for.

j) After assembly, all the piping shall be dismantled pickled, rinsed neutralized, air dried, oiled with system fluid and then re-assembled for inspection and testing.

k) Complete units shall be pressure tested at 1.5 times of system working pressure.

l) Performance test, of different components, shall be carried out by running system pumps in presence of client's representative.

m) All components of lubrication system shall be painted as per Painting specification GS- 08 (GTS).

n) All units to be packed properly in wooden boxes to protect the equipment against damages due to long Outdoor storage, rain and transit. All instruments to be checked separately in wooden boxes.

o) Power units to be filled with system fluid to prevent corrosion/rusting due to long storage Openings of all the units shall be appropriately blanked for air tightness.

3.12 DRAWINGS AND OTHER DOCUMENTS

3.12.01 Drawing and technical information shall be furnished in according to technical specification. Following types of Drawing and technical information shall be provided.

3.12.02 Block diagram of system.

3.12.03 Oil Lubrication circuit drawings for each tank unit, main pumping unit, filter cooler unit, return line filter unit, pressure vessels, power unit to individual consumers showing each components of respective unit i.e. pressure gauge,

đ 2022 MECON Limited. All rights reserved.

pressure reducing station, pressure switch, etc. including all interconnecting lines by means of approved graphical symbols with parts list indication in BOM with complete specification, size, pressure rating, material, model no., make, quantity etc. of each item.

3.12.04 General arrangement drawings for tank unit, main pumping unit, filter cooler unit, return line filter unit and pressure vessels.

3.12.05 General arrangement drawings for the cellars.

3.12.06 Interconnecting piping drawing from cellar to consumer points.

4.00 GREASE LUBRICATION SYSTEM & INTERCONNECTING PIPING

4.01 GENERAL

Number of Grease systems shall be decided by tenderer according to his requirement, however, area wise grease systems shall be provided as detailed out in this specification. Automatic centralized dual line grease system shall be designed to provide proper lubrication to all the greasing points. Motorized multiline grease system can also be used if number of points is less. Manual (portable) grease gun with suitable fitting to suit grease nipple shall be provided for all grease points which are not being greased by Centralized grease system / Motorized multiline grease system.

Scope of work shall also include supply of equipment, piping, initial fill & consumables, erection & commissioning of all equipment of grease systems including interconnecting piping.

4.02 SCOPE

4.02.01 This specification covers the grease systems required for various units. This includes all types of grease lubrication systems including interconnecting piping, electrical control panel and components of centralized grease systems for indicating, recording & integration of various parameters such as pressure, temperature, flow, etc; control devices for manual and automatic operation of the systems; safety devices and alarms for abnormal operating conditions; interlocks for sequencing and safe operation.

4.02.02 The selection, design and construction of the systems shall be suitable in every way for the service intended and shall be oriented towards maximizing interchangeability of components and minimizing maintenance. Each system shall be complete in all respects including all accessories essential for proper installation, operation and maintenance, irrespective of whether such items are specifically mentioned in the Technical Specifications.

4.02.03 Details concerning each grease shall be furnished in the form of a chart, indicating system reference, consuming point references, location of system, type of grease, ISO viscosity grade, manufacturer's code number for grade of grease and quantity for first fill of system including interconnecting piping. Wherever possible, equivalents with due regard to local availability shall be mentioned.

4.03 BASIS OF DESIGN

4.03.01 The design shall ensure that the components of the grease systems are compatible with the grease selected and suitable for long trouble free life at the operating

đ 2022 MECON Limited. All rights reserved.

conditions in the plant and under climatic conditions prevalent at site. In selecting the grease, the operating temperature of system shall be given careful consideration; grease penetration numbers shall always be related to operating temperature.

4.03.02 Sealing Devices

4.03.02.01 Material of all sealing devices shall be compatible to the grease. Wherever possible, sealing devices shall be of the pressure sealing type.

4.03.02.02 Sealing devices shall be suitable for system operating temperature and pressure.

4.03.03 Over-pressure protection

4.03.03.01 Suitable relief valve shall be provided on the discharge side of all positive displacement pumps and over-pressure protection shall be provided else-where in circuits where damage to the equipment or hazards to personnel may result if design pressures are exceeded. Check valves shall be provided on the discharge side of all pumps to prevent any back flow.

4.03.03.02 End pressure relay for both the line of dual line system shall be provided. These shall serve the need of over-pressure protection as well as for line changeover by operation of motorized change over valve of ahead of pump on main line.

4.03.04 Fault Alarms

4.03.04.01 Audio-visual alarms shall be provided in the local control panel for each grease system for the following faults:

a) Low pressure in the system.

b) High level of fluid in reservoir and stoppage of pneumatic operated grease filling pump.

c) Low level of grease in reservoir.

d) Low-Low level of grease in reservoir and main pump cut-off.

e) Motor overload.

4.03.04.02 For any of the above faults, necessary audio-visual alarms shall be provided in the control room/control pulpit for “FAULT IN GREASE SYSTEM”.

4.04 DUAL LINE CENTRALISED GREASE LUBRICATION SYSTEM

4.04.01 General

4.04.01.01 Automatic Dual Line Centralized Grease Lubrication System shall be used for lubricating large number of bearing points in a large machine or group of machines requiring frequent supply of grease for long and uninterrupted operation.

4.04.01.02 An automatic dual line centralized grease lubrication system shall incorporate grease reservoir of adequate capacity with motorized plunger type grease pump & motor, stand-by pump with motor, check valves, relief valves, pressure gauge, pressure switch, grease filters, isolation valves with limit switches on discharge lines & tank return lines between pumps and changeover valve, motorized reversing valve, lubrication dose feeders (metering feeders), end-of-line pressure switches with pressure gauges, high pressure dual line pipes complete with end

© 2022 MECON Limited. All rights reserved.

fittings for connection to lubrication points, manifold blocks, grease filling pump with lifting device for automatic filling of reservoirs, solenoid valves on grease filling lines, instruments, solenoid valves on grease filling lines, instruments and controls, suitably designed dust and moisture proof control panel.

Separate grease systems shall be provided area wise. Further, hot zone and cold zone shall also have separate grease system.

4.04.02 Details of Items for Centralized Grease Lubrication System

4.04.02.01 Reservoir for Centralized Grease Lubrication System.

4.04.02.02 Each grease lubrication system shall have 1 no. of reservoir having capacity of 100 ltrs or capable of catering atleast 15 days of requirement of grease circuit served as per designed greasing cycle.

4.04.02.03 It shall be made from general purpose structural steel fitted with accessories to achieve.

4.04.02.04 The reservoir shall be complete with a heavy inertia follower plate to pump suction, tell-tale rod for indication of grease content, filling connection with strainers and reservoir cover. Tell-tale rod shall be equipped with electrical contact limit switches for audio-visual alarms for low level, low-low level & high level. At low level of the reservoir the grease filling pump shall start automatically and at high level of the reservoir the grease filling pump shall stop automatically. At low-low level of the reservoir the main grease pump shall stop automatically.

4.04.02.05 One (1) no. of pneumatic operated grease pump at each location / grease lubrication system for filling grease reservoir shall be provided. Pneumatic operated grease pump shall have facility of pneumatic hoist for locating grease pump over grease barrel. Necessary accessories air maintenance unit hose, pressure gauge, strainers, valves, etc. shall also be provided.

4.04.03 Pumps for Grease Lubrication System

4.04.03.01 Pumps for grease lubrication system shall be of adequate pressure rating to overcome the tremendous pressure drop in pipelines and in metering feeders and to introduce grease in bearing through restriction. Suitable check valve and relief valve shall be provided with the pump to protect the internal parts from being damaged. Internal operating parts shall be well lubricated to ensure smooth operation.

4.04.03.02 Grease pumps shall be positive displacement plunger type with robust construction consistent with high pressure service. Care shall be taken while selecting the pressure rating of the pump for high pressure loss through pipes and fittings, particularly in case of long piping.

4.04.03.03 The grease reservoir shall be mounted on top of the pump for efficient pumping.

4.04.03.04 Main grease pumps shall be driven by electric motors for automatic systems. Grease filling pumps shall be pneumatically driven with dry compressed air, the actuating mechanism shall operate successfully with the dry air pressure of 4 bar. Adequate rating and length of hose shall be provided at inlet & outlet of pneumatic operated barrel pump.

đ 2022 MECON Limited. All rights reserved.

4.04.03.05 For each centralized grease lubrication system shall have one (1) motor driven operating main pump to meet the system requirement and one (1) identical motor driven additional main pump shall be provided as a stand-by unit. Stand-by unit shall be permanently piped to the system. Instruments and controls shall indicate the need for starting the stand-by pump in the event of failure of working main pump. The stand-by main pump unit shall be provided with electrical junction box and shall be pre-wired upto junction box. Each grease system shall be provided with a PLC based electrical control panel.

4.04.04 Filters / Strainers for Grease Lubrication Systems

4.04.04.01 Filters used in grease lubrication system shall be of line mounted type. The filter element shall be so located that dismantling of filter is not necessary while taking out the element for cleaning. Body of filter shall be 'Y' type made from steel bar stock to withstand high pressure duty. Filter element shall be of stainless steel and of 250 micron fineness (approx.).

4.04.04.02 Necessary filters shall be provided in the reservoir filling port to filter the grease during filling. The filter element shall be easily removable for cleaning.

4.05 PIPEWORK AND HOSE ASSEMBLIES

4.05.01 The main headers and sub-headers for grease lubrication systems shall be of carbon steel with carbon steel fittings. The feed pipes from metering feeders to lubrication points shall be of stainless steel with carbon steel cadmium plated fittings. The headers and sub-headers in wet area shall be of stainless steel with stainless steel fittings.

4.05.02 For Grease System, the main dual-line headers shall be preferably of 30 mm OD x 5 mm thk or 25 mm OD x 4 mm thk or 20 mm OD x 3 mm thk depending on the length of main headers. The sub-headers shall be preferably of 20 mm OD x 3 mm thk or 16 mm OD x 2.5 mm thk or 10 mm OD x 1.5 mm thk depending on the length of main sub-headers. The feed lines from metering feeders to lubrication points shall be 10 mm OD x 1.5 mm thk stainless steel.

4.05.03 For hose, the bursting pressure shall be atleast 3 times the maximum working pressure of the system. Pipe work and hoses shall be suitable for operating temperature from + 10°C to + 90°C. All the hoses in hot area shall be with stainless steel braided cover and silica cloth cover.

4.05.04 Specification of Pipes & Fittings

4.05.04.01 Carbon Steel

I. All tube sizes, as mentioned in schematic drawing, shall be of following specification.

- Seamless tubes to DIN 2391 Part – 2, 1994 and 37.4 NBK to DIN 1630 – 1984

II. Fittings shall be of following specification:

- Welding nipple with 'O' ring CS to 14C14S14 of IS: 1570 (Part III)-1979

© 2022 MECON Limited. All rights reserved.

4.05.04.02 Stainless Steel

I. All tube sizes, as mentioned in schematic drawing, shall be of following specification in wet area.

– Seamless tubes to DIN 17458-1995 with material no. 1.4541 an condition-h and dimension as per DIN 2462, part – I -1981

II. Fittings shall be of following specification:

– Welding nipple with 'O' ring DIN 17440-1985 with material no. 1.4541

III. Hoses at consumer point ahead of dose feeder shall be of atleast 500 mm length & rating shall be SAE 100R 2/9/11 as per requirement and shall be complete with female swivel BSP crimp end fittings.

IV. Butt weld pipe joints below 38 mm OD shall be full TIG welded and root run for pipe above 38 mm OD shall be TIG welded. SS pipes shall be full TIG welded using Argon.

V. After fabrication, all pipes to be cleaned, degreased, pickled, neutralized, rinsed and oiled. Tubes shall be first cleaned, pickled, etc. and then assembled.

VI. All pipelines shall be clamped with heavy series polypropylene clamps. For hot area, aluminium type clamps shall be used.

4.06 INITIAL FILL / CONSUMABLES

Scope of supply shall include First fill of grease in required quantity upto successful commissioning & PG (as defined in Contract), i.e., after commissioning all the system tanks and piping shall be full.

Quantity of flushing oil shall be sufficient to make the system ready for commissioning.

4.07 INSPECTION AND TESTING

4.07.01 All grease systems / components shall be inspected and tested at the manufacturer's premises by the Purchaser / Consultant as per approved QAP by Consultant.

Performance tests for Grease systems / equipment shall be carried out at site along with the operation of the main equipment to which the grease system shall be connected, to check various parameters like flow, pressure, etc. as per schematic.

4.08 ASSEMBLY, ERECTION, TESTING AND COMMISSIONING

4.08.01 All components and equipment shall be cleaned, both externally and internally, as mentioned in the equipment tenderer's manuals for erection and maintenance.

4.08.02 Grease pipework shall be assembled, tested, pickled, flushed and commissioned as per tenderer's piping instructions.

© 2022 MECON Limited. All rights reserved.

4.08.03 Installation, testing & commissioning of electrical systems associated with grease system shall conform to General Technical Specification and electrical chapter of this TS.

4.09 PAINTING

All components of the grease system and interconnecting piping shall be painted as per Painting Specification GS –08 (GTS).

4.10 SPARES

4.10.01 Commissioning spares

Adequate nos. of 'O' ring, seal kit for dose feeders & grease components, 'O' ring for fittings used, solenoid coils, plug-in connectors and hoses shall also be included in commissioning spares to take care till successful commissioning (as defined in contract).

Any items required for commissioning but not included in commissioning spare shall also be supplied at no cost implication to Customer.

4.10.02 2-years spares

A list of 2-years spares based on Tenderer's past experience shall also be furnished.

4.11 DRAWINGS AND OTHER DOCUMENTS

4.11.01 Drawing and technical information shall be furnished in according to technical specification. Following types of Drawing and technical information shall be provided.

4.11.02 Block diagram of system.

4.11.03 Grease circuit drawings for each system showing tank unit, main pumping units, relief valve, pressure gauge, motorized change-over valve, isolation valve, solenoid valve for filling of grease and pneumatic barrel pump & air maintenance unit including all interconnecting lines by means of standard graphical symbols with parts list indication in BOM with complete specification, size, pressure rating, material, model no., make, quantity etc. of each item.

4.11.04 General arrangement drawings for main pumping unit and pneumatic operated barrel transfer pump.

4.11.05 General arrangement drawings for the hydraulic / lubrication rooms where grease system is located.

4.11.06 Interconnecting piping drawing for grease from hydraulic / lubrication room (Where grease system is located) to dose feeders and finally upto consumer points.

đ 2022 MECON Limited. All rights reserved.

5.00 PNEUMATIC SYSTEMS & INTERCONNECTING PIPING

Pneumatic systems shall cover compressed air & instrument air.

Instrument air shall only be used for operation of pneumatic cylinders & air motors. Compressed air shall be used for process requirement and service care purpose.

The Pneumatic systems will be complete with all equipment pipework, electrics, instrumentation and controls as required and as specified.

5.01 SCOPE

Scope of work shall include supply of equipment, piping, & consumables, commissioning spares & 2-years spares and erection & commissioning as detailed out below:

Equipment shall comprise of all pneumatic valve stands / valve panels with necessary components for the actuation of pneumatic cylinders, pneumatic motors and actuators.

Supply of pneumatic cylinders, pneumatic motors and actuators will be made as per the requirement. It will cover supply of interconnecting piping between take-over points near building column to pneumatic valve stand / valve panels and piping between pneumatic valve stands / valve panels to pneumatic cylinders / motors / actuators.

Supply of adequately sized pressure vessel with necessary pneumatic control & accessories for emergency actuation of air motor / pneumatic cylinder, if process demands.

Supply of anodized circuit plates for each pneumatic valve stand.

Scope of work shall also include supply of equipment, piping, & consumables, erection & commissioning of all equipment of pneumatic systems including interconnecting piping.

5.02 DESIGN BASIS

The pneumatic systems will be provided complete with isolation valves, air receivers, air line filter of 5 micron fineness, regulator with pressure gauge, lubricator, solenoid operated directional control valves, speed control valves, silencers, pressure gauge, pressure switch, controls, pneumatic cylinders / actuators, pneumatic motors, interconnecting piping between take-over points near building column to pneumatic valve stand / valve panels and piping between pneumatic valve stands / valve panels to pneumatic cylinders / motors / actuators, interlocks and audio-visual alarms for fault indication. Instrument quality air will be used for the actuation of pneumatic cylinders and pneumatic motor.

Anodized circuit plates will be provided with pneumatic valve stands / valve panels. The pneumatic valve stands / valve panels will be provided with electrical junction boxes and will be pre-wired upto electrical junction box.

Design velocity for compressed air and instrument air shall be in the range of 8-10 m/sec.

All pneumatic components shall be designed to work at 4 bar pressure.

đ 2022 MECON Limited. All rights reserved.

5.03 GENERAL

a) All the flanges used in the Pneumatic circuits will be of adequate rating as per ASTM / DIN.

b) All the isolation and non-return valves used in the Pneumatic circuits shall be of forged steel / cast steel construction. Pressure reducing valves and strainer will be provided in the Pneumatic circuits whenever required.

c) Tenderer will submit pneumatic schematic drgs. showing all pneumatic components(compressor ,receiver ,etc) and control circuit for consumers (isolation valve, solenoid operated valve, speed control, air cylinder/air motor, etc.)

d) QAP of complete pneumatic package will be mutually discussed and finalized after award of order.

e) Lay out of Pneumatic pipelines on the equipment will be such that these are easily accessible for maintenance and also that these don't pose any problem in operation and maintenance of other equipment installed on these machines.

Suitable grade of stainless steel pipes / tubes & fittings shall be used for piping in instrument air circuits. Carbon steel pipes / tubes & fittings shall be used for piping for compressed air circuits.

f) The design, construction, material specification & testing of the receivers will conform to the relevant IS/ASME codes for such pressure vessels. Each receiver will be provided with safety relief valve, pressure gauge, manhole, drain pipe & cock etc. of adequate size & ratings. A metal plate indicating the designed pressure rating, date of hydraulic pressure testing carried out to the receiver and other particulars as governed by the statutory rules must be affixed to each receiver. A three (3) – way cock will be provided between the receiver and its pressure gauges.

g) All the flanges used in the Pneumatic circuits will be of adequate rating as per DIN / ASTM.

5.04 PIPE & FITTINGS FOR PNEUMATIC SYSTEM

All pipes and fittings used in the pneumatic system shall conform to DIN / ASTM as mentioned below.

5.04.01 <u>Pipe & Fittings</u>

5.04.01.01 <u>Carbon Steel (For compressed air line)</u>

I. All tube / pipe sizes should be as given in schematic drawing to be of following specification.

a) Up to 38 OD for all lines -Seamless tubes to DIN 2391- Part – 2, 1994 and 37.4 NBK to DIN 1630 – 1984

©2022 MECON Limited. All rights reserved.

b) Above 38 mm OD size - Seamless schedule 40 black pipe of ASTM – A106 Gr. B – 94 and Dim as per ANSI B 36.10 – 1995

II. Fittings should be of following specification:

a) Pipes upto 38 mm OD size - Welding nipple with 'O' ring CS to 14C14S14 of IS: 1570 (Part III)-1979

b) Above 38 mm OD size

i) Upto 50 NB - Socket weld fittings of 3000 # rating to ASTM – A-105 -1994 and Dim as per ANSI B 16.11 – 1991

ii) Above 50 NB - Butt weld fittings of ASTM – A-234 WPB – 1994 AND Dim. As per ANSI B 16.9 -1993 of schedule same as per that of pipe

iii) Flanges should be of - Slip-on flanges of ASA 150 following specification class for return and drain. ASTM – A – 105 - 94. Dim. as per ANSI – B - 16.5 - 1988.

For slip-on flange raised face flange electrogalvanised hexagonal head screw & hexagonal nuts shall be used. Grade of hexagonal head screw shall be 8.8 and that of nut shall be 8.

III. Shut – off / Isolation valves should be of following specification:

Ball valves (150 class) with SS internals upto 50NB – socket weld type and above 50 NB – with flanged (ASA 150 class) ends shall be used. At battery limit (TOP) of individual unit of furnace, etc. from compressor room shall be also ball valve. In case size of valve is more than 125 NB gear type ball valve shall be used.

5.04.01.02 <u>Stainless Steel (For instrument air line)</u>

I. All tube / pipe sizes should be as given in schematic drawing to be of following specification.

a) Up to 38 OD -Seamless tubes to DIN 17458-1995 with material no. 1.4541 and condition-h and dim. as per DIN 2462, part –I-1981

b) Above 38 mm OD size - Seamless schedule 40 pipe as per ASTM – A-312-TP304-1995 and dim. as per ANSI-B-36.19-1985

II. Fittings should be of following specification:

a) Pipes upto 38 mm OD size - Welding nipple with 'O' ring DIN 17440 - 1985 with material no. 1.4541.

b) Above 38 mm OD size

đ 2022 MECON Limited. All rights reserved.

i) Upto 50 NB - Socket weld fittings of 3000/6000# rating to ASTM – A – 182 - F304 - 1996 and Dimension as per ANSI B 16.11 – 1991.

ii) Above 50 NB - Butt weld fittings of ASTM – A – 403 - WP304 - 1996 and Dimension to ANSI - B - 16.9 - 1993 of schedule same as that of pipe.

III. Flanges should be of following specification:

a) For all pipe sizes -Slip-on raised face flanges of ASA 150 class for return and drain. SS-304. Dimension as per ANSI-B-16.5-1988

b) Applicable in narrow space- SAE 4 bolt socket weld type of 3000# rating with O-rings in low / medium pressure line, SS-304.

For slip-on flange raised face flange SS hexagonal head screw & hexagonal nuts and for SAE flange SS hexagonal head screw & hexagonal nuts shall be used.

IV. Shut – off / Isolation valves should be of following specification:

Ball valves (150 class) with SS internals upto 50NB – socket weld type and above 50 NB – with flanged (ASA 150 class) ends. At battery limit (TOP) of individual units from compressor room shall be also ball valve. In case size of valve is more than 125 NB gear type ball valve shall be used.

5.04.02 Pipe Support

All pipelines shall be clamped with heavy series polypropylene clamps. For hot area, aluminium type clamps shall be used.

For pipe size above 250 NB steel pipe clamps shall be used.

5.05 INSPECTION AND TESTING

5.05.01 All pneumatic systems / components shall be inspected and tested at the manufacturer's premises by the Purchaser / Consultant as per approved QAP by Consultant.

Performance tests for pneumatic systems shall be carried out at site along with the operation of the main equipment to which the pneumatic system shall be connected.

5.06 ASSEMBLY, ERECTION, TESTING AND COMMISSIONING

5.06.01 All components and equipment shall be cleaned, both externally and internally, as mentioned in the equipment tenderer's manuals for erection and maintenance.

5.06.02 Pneumatic pipework shall be assembled, tested, flushed and commissioned as per tenderer's piping instructions.

5.06.03 Installation, testing & commissioning of electrical systems associated with pneumatic system shall conform to General Technical Specification and electrical chapter of this TS.

5.07 PAINTING

© 2022 MECON Limited. All rights reserved.

All components of the pneumatic system and interconnecting piping shall be painted as per Painting Specification GS – 08 (GTS).

5.08 SPARES

5.08.01 Commissioning spares

Adequate nos. of 'O' ring, seal kit for pneumatic components, 'O' ring for fittings used, solenoid coils, plug-in connectors and hoses shall also be included in commissioning spares to take care till successful commissioning (as defined in contract).

Any items required for commissioning but not included in commissioning spare shall also be supplied at no cost implication to Customer.

5.08.02 2-years spares

A list of 2-years spares based on Tenderer's past experience shall also be furnished.

5.09 DRAWINGS AND OTHER DOCUMENTS

5. 09.01 Drawing and technical information shall be furnished in according to technical specification. Following types of Drawing and technical information shall be provided.

5. 09.02 Block diagram of system.

5.09.04 General arrangement drawings for main pumping unit and pneumatic operated barrel transfer pump.

5.09.05 General arrangement drawings for the hydraulic / lubrication rooms where grease system is located.

5.09.06 Interconnecting piping drawing for grease from hydraulic / lubrication room (Where grease system is located) to dose feeders and finally upto consumer points.

6.00 ABBREVIATION

NTM - No Twist Mil

VVVF - Variable Voltage Variable Frequency.

đ 2022 MECON Limited. All rights reserved.

UTKARSHA ALUMINIUM DHATU NIGAM LIMITED

ESTABLISHING FACILITY FOR ALUMINIUM ALLOY MELTING, SLAB CASTING AND FLAT ROLLED PRODUCTS PRODUCTION FACILITY

GENERAL TECHNICAL SPECIFICATION FOR STORAGE & ERECTION (GS – 11)

MECON LIMITED
RANCHI - 834002

No. MEC/S/11/35/Q7R6/GTS/01/R0 **JUNE' 2022**

LIST OF CONTENTS FOR GS - 11

Sl. No.	Description	Page No.
01.	Scope of Work	2-10
02	List Of Tools & Tackles	11-12
03	Cold Trial, Preliminary Acceptance Test, Commissioning & Final Acceptance Test	12
04	Weight Schedule	12
05	Time Schedule	12
06	Resource Plan	13
07	Obligation Of The Purchaser	13-15
08	List Of Exclusions From Contractor's Scope Of Work And Services	16

© 2022 MECON Limited All rights reserved.

1.0.0 SCOPE OF WORK

The scope of work of the Contractor shall include complete erection services covering unloading, receiving of materials, storage, store management, transportation to site and subsequent handling at site, preservation, erection / installation, testing, start-up, commissioning and performance tests of all plant and equipment supplied by the Contractor as well as those that may be procured from / fabricated by agencies based on the Contractor's drawings, specification and bill of materials.

ERECTION METHODOLOGY

The Contractor shall select and adopt methods and procedures for equipment erection to suit the nature of equipment and erection work involved according to his experience in such works.

The Contractor shall closely co-ordinate and co-operate with all other contractors engaged by the Employer and working at site simultaneously during erection, testing, start-up and commissioning.

The Contractor shall keep equipment, structures and materials adequately braced by guys, struts or other approved means which shall be supplied, and installed by the Contractor as required till the erection work is satisfactorily completed.

Contractor shall supply safety helmets, gloves, safety shoes, welding helmet, goggles, safety belts, aprons etc to the workmen as per safety requirement at site.

1.1.0 STORE CONSTRUCTION

The stores are to be constructed and maintained by the Contractor until the plant is commissioned and handed over to the Purchaser. The area of the store shall be decided based on actual site requirement. The plain land shall be provided by the Purchaser.

1.1.1 Covered Store

All four walls will be brick walls with cement lining. Wall thickness will be approx. 9-12 inch. A metal door and windows will be provided. The floor will be leveled and made out of stone boulders and cement plastered wherever necessary. The roof will be covered by Tin Sheet using pipes to support the roof with adequate material handling equipment and overhead truss to move the material within store and to unload in and unload from store. The size and other details of the store shall be suitably decided. The Employer shall provide the metal approach road to the stores connecting with other road network.

Some of the material requires Air Conditioned storage. The contractor shall construct covered air conditioned stores, if required depending on the nature of storage of equipment. The specification of store shall be same as above with Air conditioning arrangement.

© 2022 MECON Limited All rights reserved.

The drawing for covered stores shall be prepared by the contractor and the same shall be approved by MECON/consultant. Construction of stores shall be as per the approved drawings.
The lighting inside and outside the stores shall be under the scope of contractor including supply of all the lighting materials.

The contractor shall provide and maintain computers and printers to maintain the store management records.

1.1.2 Open Area

An open area as per requirement shall be used at suitable location to store the equipment. This area will be roughly leveled and fenced with barbed wire and poles with a gate. The equipment will be stored on floor on sleepers and covered with plastic/tarpaulin sheets shall be provided within the stores.

1.2.0 MATERIAL RECEIPTS, STORAGE & HANDLING

1.2.1 Receipt and unloading of all material including spares for mechanical & auxiliary equipment & System from stores and any other material received from equipment supplier, maintaining proper documents of the items received, handling etc. from the start date until all the material is erected & commissioned and handed over to the Purchaser is the responsibility of erection Contractor.

1.2.2 The material received from the supplier shall be checked and verified by the Contractor for completeness of supply as per packing list. An Equipment Inspection & Verification Report (EIVR) shall be prepared by the Contractor to report any damage/missing items. Opening of crates and packing cases, thorough cleaning and checking of equipment etc. in relation to manufacturers drawings/packing lists and inspect for any visible damage or defect. Damaged/missing items, if any shall be brought to the notice of Purchaser.

1.2.3 Any special equipment, which needs air-conditioned storage, shall be kept in air-conditioned store.

1.2.4 The Contractor shall lodge insurance claim for material / packages received in damaged condition.

1.2.5 The Contractor shall remove any material from the Customer's stores only against written authorisation. Certain specified performa shall be used for this purpose.

1.2.6 The Contractor shall also securely pack and forward to the transporter; certain items which may have to be delivered to the other agencies for repair/assembly work. For the above said packing, Contractor can use free of charge cartoons, packing wood, which shall be available at site due to unpacking of equipment for erection work.

1.2.7 The Contractor shall hand over left over items/commissioning spares to the stores of the Purchaser against delivery challans.

© 2022 MECON Limited All rights reserved.

1.2.8 The Contractor shall maintain proper records of the material transported and stored by him after receipt from the stores.

1.3.0 STORING OF EQUIPMENT

The equipment shall be stored in closed or semi-closed type stores according to the protection needed for different types of equipment and parts. Microprocessor based instruments, analytical balance etc, which need temperature and humidity controlled storage shall be stored in AC stores.

1.3.1 Insulation Materials

All insulation materials shall be carefully handled to prevent damage and shall be protected from moisture. High, medium, low temperature insulation materials shall be stacked in suitably identifiable units.

1.3.2 Pipes

All pipes shall be carefully unloaded. Ends of all pipes and the openings of all flanges and nozzles attached to drums, tanks or equipment while in storage shall be greased, capped, plugged or blank flanged.

1.3.3 The Contractor shall check that valves and fittings are not subject to corrosion from hydrostatic test liquid remaining saturated in the packings.

Packing rings, gaskets, flanges, bolts and nuts etc shall be suitably stacked in racks with marking.

1.3.4 Structural Fabricated Materials

All structural fabricated members shall be stacked in the sequence in which they are required for erection. All members shall be stacked free from ground to prevent corrosion and shall be so stacked as not to cause deformation in any individual member.

1.3.5 Laboratory Equipment, Electrical Instruments & Controls

Laboratory equipment, control instrument panels, switchgears, motors, instruments, control devices, other electrical equipment and accessories shall be stored in a cool dry covered place.

1.3.6 For the laboratory equipment and other instruments, which are highly sophisticated and delicate in nature, extra precautions shall be taken while handling to prevent accidental failure during loading and unloading operations. Special care shall be taken during transportation of these to avoid damage to the equipment due to vibration.

1.3.7 Laboratory equipment, control instrument panels, switchgears, motors, instruments, control devices, other electrical equipment and accessories shall be stored in a cool dry

© 2022 MECON Limited All rights reserved.

covered place. Particular care shall be taken to prevent ingress of foreign matter, moisture or rodents, in such equipment.

1.3.8 Welding Rods

Welding rods shall be stored in a hot dry pace. During storage, welding rods for different alloy materials and categories of work shall be stored separately and identified for proper use.

1.3.9 Protection against Weather & Fire Hazards

The Contractor shall provide at his own cost any required sleepers or concrete or wooden blocks for supports and tarpaulins for protecting the equipment etc against inclement weather during installation.

1.4.0 TRANSPORTATION

1.4.1 The Contractor shall provide necessary fixtures, fasteners and other safety measures to ensure safe transportation of materials from store to erection site.

1.4.2 The Contractor shall be responsible for arrangement of adequate material handling equipment like trucks, trailers, forklifts, mobile cranes, tools and tackles as required for his work.

1.4.3 The necessary lifting tackles, tools, wire ropes, slings of suitable capacities and other equipment necessary to carry out the work shall be arranged by the Contractor. All such lifting tackles should have valid test certificates.

1.4.4 In case the Contractor does not provide trucks/trailers as and when required, Purchaser can arrange to transport the material through alternate Contractor and extra expenditure incurred including demurrage, if any will be recovered from the Contractor's bill.

1.4.5 Any discrepancy / shortage / damage found in the consignment after taking delivery from the stores would be the responsibility of the Contractor. However for intact boxes, Contractor shall be responsible for their safe custody after receipt.

1.4.6 All equipment and rigging shall be examined and checked by Contractor at frequent intervals to prevent accidental failure and consequent damage to the equipment, structures and materials to be installed.

1.5.0 CIVIL FOUNDATIONS

1.5.1 The equipment shall be installed on civil foundations. All pits, pockets and sumps shall be thoroughly cleaned by the Contractor. The foundation bases shall be cleaned by water and compressed air to expose the surface.

The top of the concrete foundation shall be thoroughly cleaned by the Contractor prior to placement of equipment on foundation. Concrete surface shall be roughed up by

© 2022 MECON Limited All rights reserved.

chipping 5 to 10 mm deep uniformly and the surface shall be washed & cleaned with water.

1.5.2 The Contractor shall provide benchmarks at 10 to 12 locations in longitudinal & traverse axis inside the bay wherever necessary for the purpose of checking the foundations.

1.5.3 The Contractor shall establish necessary benchmarks and sub-center lines required for the purpose of erection of individual equipment.

1.5.4 The Contractor shall also establish permanent center lines and bench marks at convenient location for future reference of the plant personnel.

1.5.5 The Contractor shall check rough concrete levels, foundation bolt hole locations and levels and pockets for all equipment foundations based on certified civil drawings furnished by the Purchaser before start of erection.

1.5.6 If any discrepancy is noticed in the dimensions, center lines, levels, locations etc of the foundation or anchor bolts or pockets, the same shall be brought to the notice of the Purchaser.

1.5.7 Minor cutting, chipping, cutting of few reinforcement rods if required and deepening of foundation/pocket up to 50 mm to eliminate any minor interference of the equipment with their respective foundations etc shall be carried out by the Contractor.

1.5.8 Any embedded steel inserts necessary for pipe supports, if not fully exposed, shall be exposed by the Contractor by a depth of maximum 25mm enabling him to weld the pipe supports.

Contractor should provide any missing/additional steel inserts if necessary.

1.5.9 The concrete surface shall be cleaned from all foreign particles and degreased before grouting of the equipment.

1.5.10 The Contractor will do dressing and micro chipping of foundations as well as cleaning of top concrete foundation with air and water prior to placement of equipment/grouting.

1.6.0 TEMPORARY INSTALLATIONS

1.6.1 Providing all temporary ladders, scaffolding materials, platforms, supports and other necessary facilities required for handling, erection shall be the responsibility of the Contractor.

1.6.2 Arrange access at site, if required, for the erection work shall be the responsibility of the erection Contractor.

1.6.3 The Purchaser shall provide one point for power, air and water. The Contractor shall take responsibility of further extension (laying) as per site requirement and maintenance of these points.

© 2022 MECON Limited All rights reserved.

1.6.4 Providing temporary lighting in the Erection area by the Contractor.

1.7.0 MATERIAL HANDLING EQUIPMENT AND TOOLS & TACKLES

1.7.1 The Contractor shall mobilise himself with adequate material handling equipment of adequate capacity like mobile cranes, fork lifts, trailers, winches, derricks, pulley blocks, slings etc in addition to other erection tools and consumables.

1.7.2 The Contractor shall provide all necessary construction tools and tackles, portable compressors, small hand tools, instruments, building equipment etc required for erection work.

1.7.3 The Contractor shall furnish a tentative list of tools and tackles and other erection material required for carrying out the erection and commissioning of the plant.

1.7.4 EOT crane if available shall be made available to the Contractor. However, the erection Contractor shall make necessary arrangement for providing mobile crane to ensure timely completion of erection work. The mobile crane should be able to handle single link weight of 100 t**.**

1.8.0 CONSUMABLES & OTHER ERECTION MATERIALS

1.8.1 Contractor shall supply all required consumables and erection materials including, but not limited to oxygen, acetylene gas, argon gas, solder lugs, welding rods, oil, grease, kerosene, carbon tetrachloride, shim stocks, tags, jointing compounds, gaskets, insulation materials, Prussian blue, petrol, diesel, solvents, sealing compounds, bolts & nuts, rivets, piano wires, wood blocks, spacers, templates, jute and cotton waste, cloth, emery paper etc as required for the completion of the work according to the contract. All materials used in connection with erection work shall comply with appropriate Standards

1.8.2 The Contractor shall supply all erection materials including packing plates, machined taper wedges, shims etc. The materials required for the fabrication/machining of these plates shall also be supplied by the Contractor.

1.8.3 Painting - the Contractor shall arrange for touch up painting. The paint shall be specified by the Purchaser and supplied by the Contractor.

1.8.4 Permanite gaskets of various thicknesses shall be provided by the Contractor.

1.8.5 Supply of pickling pumps, flushing pumps, pickling and neutralising materials, temporary pipeline connection with valve for forming loops, fabrication of pickling tanks etc. to carry out pickling by in-situ process shall be done by the Contractor.

1.9.0 SITE FABRICATION – WELDING

The welding and the welded work shall conform to IS:316 and IS:9596, unless otherwise specified.

© 2022 MECON Limited All rights reserved.

Preparation of Joints - The edges shall be prepared by flame cutting torch, correctly to the shape, size and dimensions of the groove as per the site conditions and no machine tools shall be deployed for the purpose.

Wherever necessary, parts to be welded shall be properly assembled and held firmly in position by means of jigs clamps etc prior to and during welding. Tolerances for assembly of welded joints shall be as per IS:9595/AWS D1.1 or equivalent.

Qualification and Testing of Welders - The Contractor shall satisfy the Consultant that the welders appointed by the Contractor are suitable for the work for which they are responsible and shall produce evidence to the effect that welders have satisfactorily completed appropriate tests

Welding Procedure - Welding procedure shall be prepared by the Contractor in line with IS: 7307 and tests shall be carried out to qualify procedure.

Jigs and Manipulators - Jigs and manipulators shall be used where practicable and shall be designed to facilitate welding and to ensure that all welds are easily accessible to the operators.

The joints shall be radiographically tested by the Contractor, wherever necessary.

The Contractor shall employ competent persons to supervise and inspect welding work to ensure that the standard of workmanship and the quality of the materials comply with the requirements laid down in this specification.

Destructive Testing of Welds if required shall be carried out. These shall be carried out at the discretion of the Consultant as per details mutually agreed.

Dye penetrant, chalk-kerosene test, magnetic particle, X-ray / Gamma-ray radiography and ultrasonic testing shall be employed to ensure that the welds are free from defects if the same has been specified in the drawings or if required at site in consultation with MECON/consultant. Unless otherwise specified, extent of non-destructive testing shall be as agreed mutually between Contractor and Consultant.

Extent of Coverage of Non-destructive Tests - Non-destructive tests of welded joints shall be carried out as per approved drawings and procedures. The extent to which non-destructive tests are to be carried out shall be mutually discussed and agreed between the Contractor and Consultant.

The following documents shall be maintained by the Contractor and produced as and when asked for by the Consultant :

- The quality of electrodes and accessories to be used.
- List of certificates on qualification of welders who will carry out or have carried out welding and also their identification stamps on welding done by them.
- Documents on approved deviations, if any.

© 2022 MECON Limited All rights reserved.

- Radiography films and their interpretation jointwise, if udertaken.
- Ultrasonic test reports, if undertaken.
- Details of joints checked by liquid dye-penetration examination, if undertaken.
- Details of joints checked by magnetic particle inspection.

Acceptance Norms - Acceptance norms for welds shall generally be as per relevant IS, however in absence of suitable guidelines in IS, the contractor shall follow the welding norms of consultant which shall be handed over to contractor during execution of job.

1.10.0 REVISIONING, ASSEMBLY, ALIGNMENT & GROUTING OF EQUIPMENT

1.10.1 The Contractor, where necessary, shall dismantle equipment and revision the parts if required before placement on foundation. All gear drives and pinion stands shall be dismantled if required, the gear casing shall be levelled and aligned and the gear elements assembled with casing and box up with lubrication pipes etc and grouted. However, the gearboxes, which are proprietary in nature shall not be opened.

1.10.2 The Contractor shall clean thoroughly all the parts to be assembled, lubricate and reassemble. All doweling wherever necessary shall be done by the Contractor. Site assembly envisages certain amount of drilling & reaming of Dowel Holes of various sizes. The Contractor shall arrange to carry out the job including supply of drills and reamers only upto 20 dia holes.

1.10.3 Installation of all electrical equipment to be coupled to the mechanical equipment including all DC and AC motors along with motor mounted ventilation units, tacho-generators, tacho-combination units, brakes, limit switches, position encoders etc as specified.

1.10.4 The Contractor shall align all the equipment to the accuracy as indicated in the drawings. On completion of the final alignment prior to grouting of the equipment, a certificate indicating alignment/levels with reference to the drawing and actual dimensions achieved shall be prepared by the Contractor for consultant's/Customer's certification.

1.10.5 The erection Contractor shall carry out certain amount of gas cutting and grinding on components as required to maintain the working clearance.

1.10.6 Minor rectification on equipment/component during erection/ assembly/ trials shall be carried out by the Contractor at site by gas cutting, welding, grinding, drilling and tapping new holes etc as a part of erection work.

1.10.7 Limit switches/proximity switch bases, strikers etc shall be mounted on to the equipment either by drilling and tapping holes or by welding as per drawing. Modification of the base frames/support frame of mounted electrics to the extent of

© 2022 MECON Limited All rights reserved.

enlarging/plugging and drilling and tapping of new holes below dia 20 mm only shall be carried out by the Contractor.

1.10.8.1 The Contractor shall supply and carry out grouting of the equipment with anti-shrink grouting material or as specified by the consultant/customer.

1.10.9 The Contractor shall align, level & grout the AC & DC motors and also align & level electrical equipment mounted on mechanical equipment. The Contractor shall couple the electrical motors to the mechanical drives after getting clearance from Purchaser. The Contractor shall fit the couplings on both gear box shaft and motor shaft. Further decoupling and coupling shall also be done as may be necessary at site.

1.10.10 Certain electrical items shall be received at site duly assembled with mechanical equipment. The Contractor shall arrange for their erection, testing and commissioning. All motors and driven equipment shall be accurately leveled and aligned to required tolerances. Equipment shipped with motor mounted, shall be rechecked and realigned, if necessary.

1.10.11 Flushing, first filling and subsequent topping up of oils, and lubricants shall be carried out by the Contractor.

1.10.12 The Contractor shall erect all auxiliary equipment, steel work, piping and instruments, ventilation equipment etc. complete in all respects to the stage of commissioning in accordance with contract and as per relevant drawings/instructions.

© 2022 MECON Limited All rights reserved.

2.0.0 LIST OF TOOLS AND TACKLES.

The following is the indicative list of tools & tackles required for erection of the equipment. Contractor has to prepare and submit a detailed list of tools and tackles prior to start of erection :

1. Hardened and ground parallel blocks (pairs of various sizes).
2. Piano wire 0.3 mm dia and 0.5 mm dia - 5 kg each.
3. 300 mm and 500 mm combination squares - 2 nos. each.
4. Protractor head for use with combination squares - 2 nos.
5. Plumb bobs 10 nos.
6. Nylon fishing wire - 50 m.
7. Hydraulic jack - 25 T, 10 T, 5 T - 4 nos. each
8. Screw jacks - 25 T, 10 T, 5 T - 4 nos. each
9. Welding machines - Adequate no.
10. Welding generator – 2 nos.
11. Gas cutting sets with torches, hoses and gauges - 5 set.
12. Woven wire slings - pairs of various lengths and diameters from 10 mm to 25 mm.
13. Open-end wrenches for all sizes of bolts - 4 sets.
14. Light duty and heavy duty socket sets - 4 set.
15. Pneumatic drilling machine - 2 nos.
16. Pneumatic grinding machine - 2 nos.
17. Electric sander and buffer - 4 nos.
18. High-speed electric drilling machine with magnetic base with capacity up to 32 mm dia - 2 nos.
19. HSS twist drills & reamers.
20. Slip gauges - 2 sets.
21. Filler gauge - 5 sets.
22. Sledge hammers - various weights.
23. Pneumatic chipping hammers with full complements of flat, gauge, cope chisels - 5 sets.
24. Flexible grinders with stone wheels - 2 nos.
25. Angle grinders - 2 nos.
26. Straight grinders - 5 nos.
27. Torque wrenches from 100 NM to 3000 NM - 2 sets.
28. Cold rolled steel and brass shims of different thickness.
29. Eyebolts of various sizes from M8 and above - 5 set.
30. Clevises for slings.
31. Compressed air hose and cleaning equipment.
32. Complete sets of machinist's hand tools.
33. Files, emery cloth, cleaning cloth and wire brushes.
34. Hand greasing equipment - 4 nos.
35. Wire ropes of various diameters and lengths.
36. Manila rope of various diameters and lengths.
37. Chain pulley blocks 20 T, 10 T, 5 T - 3 nos. each
38. Different sizes of drills, taps, threading dies.
39. Box type square precision level of 0.01mm/m - 3 nos.

© 2022 MECON Limited All rights reserved.

40. Magnetic base micrometer with electronic attachment or with potentiometer attachment - 2 nos.
41. Welding cable - 1000 m
42. Pipe bending machine - 4 nos.

3.0.0 COLD TRIAL, PRELIMINARY ACCEPTANCE TEST, COMMISSIONING & FINAL ACCEPTANCE TEST

Contractor shall deploy necessary resources during Cold trial, PAT, Commissioning & FAT and extend necessary assistance for successful completion of above activities and shall perform following activities.

- Attending to points for rectification / modification mentioned in Preliminary Acceptance test.
- Deployment of manpower round the clock, if necessary.
- Minor rework, if necessary, to ensure required performance of the equipment.
- Inspecting gearboxes drives for oil flow and cleaning nozzles etc.
- Coupling / decoupling motors with drives.
- Adjustment / relocation of limit switches / sensors / strikers / proximity switches etc.
- Fitting, refitting, removing and fitting of splines, coupling guards wherever required.
- Check oil leakage and rectify.
- Removal and refitting of chains / ropes etc.
- Lubricating / greasing of equipment as per instruction manuals
- Overall cleaning, check for tightness of bolts / fasteners etc.
- Checking all connections / joints, priming connections etc.
- Gearboxes to be cleaned, washed and filled up as per the instruction manuals. Replace gaskets and oil seals etc., if necessary.

4.0.0 WEIGHT SCHEDULE

Detail of weight schedule shall be furnished during finalization of contract.

5.0.0 TIME SCHEDULE

The time required for erection and commissioning will be as per contract. A schedule shall be prepared by Contractor and submitted to the consultant/Purchaser for actual work plan based upon the realistic site conditions. The date of start of erection job will be intimated to the Purchaser.

The Contractor shall reschedule the work and work overtime at his own cost with the prior approval of the Purchaser as may be necessary to meet the required erection schedule.

© 2022 MECON Limited All rights reserved.

6.0.0 RESOURCE PLAN

6.1.1 The Contractor shall deploy all labour - skilled, semi-skilled and unskilled, riggers, mill wrights, certified welders, pipe fitters, instrument fitters, mechanics, licensed electricians, supervisors, foremen, erection and testing engineers etc. needed for proper erection and commissioning of plant and equipment.

6.1.2 The Contractor shall arrange management of erection work with proper and adequate supervision by qualified personnel for ensuring progress of erection work and quality of workmanship.

7.0.0 OBLIGATION OF THE PURCHASER

7.1.0 Obligations of the Purchaser for Erection

7.1.1 All equipment and machineries to be made available to the Erection Contractor for erection purposes as free issue items.

7.1.2 The Purchaser shall provide all civil works including site leveling, equipment foundations, cable ducts, cable trenches, RCC pipe ducts, pipe trenches and inserts, embedment / conduits for cable supports, equipment racks, pipe supports etc, re-routing if any, removal of obstructions. Cover plates etc except as specified during the course of erection.

7.1.3 The Purchaser shall furnish to the Contractor all survey check drawings duly marked with concrete and bolt levels, bench mark locations, foundation bolt locations with deviations, if any, for Contractor's scrutiny and check before start of erection work. After rectification of the foundation if required (by Purchaser) and based on the bench mark levels and survey check drawings provided by the Purchaser, the Contractor will proceed with erection. Any further defects in the foundation noticed during erection, shall be communicated to the Purchaser for rectification of the same. The Purchaser shall hand over the foundations of equipment completely cleared of obstructions, after the completion, properly backfilled and levelled with the levels and centrelines punched on steel plates on the foundation. The correctness and soundness of the foundation shall be responsibility of the Purchaser.

7.1.4 Roads / accesses as per permanent plant layout capable of carrying heavy and oversized equipment by trucks / trailers.

7.1.5 Complete storm water and sanitary drainage for the covered buildings used as premises.

7.1.6 Plant building in a phased manner, if possible, to suit erection schedule fit for movement of EOT cranes with EOT cranes and with permanent lighting.

7.1.7 Provide mobile crane (with operator) / wagon within plant limits, if available, for transportation and handling of equipment (weighing above 15 tonnes) on payment of hire charges by the Contractor. The Purchaser will be responsible for maintenance of these cranes including supply of spare parts.

© 2022 MECON Limited All rights reserved.

7.1.8 Allow the Contractor (including his major sub-contractor) workers and staff to avail the Purchaser's first aid facilities at site ad Purchaser's hospital facilities if available on chargeable basis.

7.1.9 Other facilities :

a) Facilities for free call on Purchaser's fire service as required.

b) Sufficient levelled space for construction of temporary site stores, site office, fabrication yard etc.

c) Adequate water for erection and drinking purpose and for use at fabrication / assembly yard, stores office, erection site etc . The quantum of requirement shall be specified by the Contractor.

d) Supply of power as per availability from 415V 3 phase AC with tapping points for fabrication, assembly, piping, cabling ad erection purpose. Providing of all incoming HT / LT feeders to the various motor control centres / electrical equipment. The quantum of requirement of construction power shall be specified by the Contractor.

e) Relevant data which may be required by the contractor for execution of the erection work from purchaser which is in Purchaser's possession. The Purchaser shall assist in obtaining such data, if required, from other agencies.

f) Assist in issue of gate passes for entry of the contractor including his sub-contractor's personnel, removal / entry of materials, tools and tackles etc. belonging to the contractor or his subcontractors and permission to engage female labour for working inside the plant as per labour laws.

g) Power and water will be drawn by Contractor from the nearest construction power substation / water main header.

h) Plant security force in position for the security of plant, machinery, stores and other resources.

7.1.10 The Purchaser shall only make the application to statutory authorities as principal employer for obtaining licences, permits, statutory consents etc. which the Contractor may need to obtain the interest of work and the fees paid by the Contractor on this account, shall be reimbursed to him by the Purchaser.

7.1.11 Render adequate assistance at site for liaison with the Purchaser's other Contractors as may be necessary.

7.1.12 The following minimum facilities at site are to be made available by the Purchaser for carrying out smooth and uninterrupted erection work

- Steel structures of mill bay with roof and cladding and fit for movement of EOT crane.

© 2022 MECON Limited All rights reserved.

- All embedded steel parts in proper position including conduits.
- Control room , white washed / painted and ventilated with windows, doors / shutters with locking arrangements.
- Temporary water and electric power connections as per Contractor's requirement.
- Main centrelines and bench marks must be given in writing.
- Approach roads as per permanent plant layout.
- Purchaser will make all efforts to provide permanent lighting in cellar room, control room and tunnels.

7.1.16 All risk cover storage cum erection insurance cover for the whole plant, equipment, erected work etc.

7.2.0 Obligations of the Purchaser for Storage & Transportation.

7.2.1 Area for covered stores / sheds of required area within a distance of maximum 2000 m from the erection site. The above covered areas shall not preferably be in more than three separate buildings.

7.2.2 Area for open space for storage of required area adjacent to the storage building.

7.2.3 Electricity at the nearest CPSS and water at construction water main.

7.2.4 Fire hydrant near storage area, if available.

7.2.5 Access to central fire brigades.

7.2.6 Railway tracks and siding adjacent to the storage area / mill building as per plant layout.

7.2.7 EOT crane, wherever available, on chargable basis.

7.2.8 All risk insurance cover during handling / transportation from Railway siding / port to stores / erection site, storage, erection, testing etc. of all equipment material to be erected including erected work till such time the same are taken over by the Purchaser.

7.2.9 Positioning of security staff for the overall security of the project.

7.2.10 Approximate area required for stores. The actual requirement shall, however, be discussed and settled later.

© 2022 MECON Limited All rights reserved.

8.0.0 LIST OF EXCLUSIONS FROM CONTRACTOR'S SCOPE OF WORK AND SERVICES

8.1.0 Any equipment foundation, finishing civil work, building and permanent structures and excavations.

8.2.0 Any major breaking / cutting / chipping of any civil or foundation work.

8.3.0 Supply of any plant, equipment and machinery and consumables except as required for erection purpose or as specified in the contract.

8.4.0 Operating personnel, operating tools and tackles, actual operation and consumables, raw materials.

8.5.0 Supply or rectification of any missing / short supplied / damaged components / equipment supplied by the Purchaser to Contractor for erection, except rectification of manufacturing defects as specified in the contract.

8.6.0 Grinding and shaping of refractory bricks except minor cutting and grinding at site.

8.7.0 Storage cum erection insurance including transit insurance for imported equipment against any damage / loss etc. for the plant and equipment taken over from the Purchaser for erection purposes till the same are taken over by the Purchaser after erection.

8.8.0 Custom's / railway clearance including unloading and loading of equipment.

© 2022 MECON Limited All rights reserved.

UTKARSHA ALUMINIUM DHATU NIGAM LIMITED

ESTABLISHING FACILITY FOR ALUMINIUM ALLOY MELTING, SLAB CASTING AND FLAT ROLLED PRODUCTS PRODUCTION FACILITY

GENERAL TECHNICAL SPECIFICATION
FOR
FIRE FIGHTING SYSTEM
(GS – 12)

MECON LIMITED
RANCHI - 834002

No. MEC/S/11/35/Q7R6/GTS/01/R0 **JUNE' 2022**

LIST OF CONTENTS FOR GS - 12

SL. NO.	DESCRIPTION	PAGE NO.
1.	INTRODUCTION	2
2.	INSTRUCTIONS TO THE BIDDER	2–8
3.	GENERAL SPECIFICATIONS FOR PORTABLE FIRE EXTINGUISHERS	9–12
4.	GENERAL SPECIFICATION FOR PASSIVE FIRE PROTECTION	12–15
5.	GENERAL SPECIFICATION FOR HIGH VELOCITY WATER SPRAY SYSTEM (HVWS) AND MEDIUM VELOCITY WATER SPRAY SYSTEM (MVWS)	16–33
6.	GENERAL SPECIFICATION FOR AUTOMATIC HIGH EXPANSION FOAM SYSTEM	33–37
7.	GENERAL SPECIFICATION FOR CLEAN AGENT INERT GAS FLOODING SYSTEM	37-50
8.	GENERAL SPECIFICATION FOR CLEAN AGENT INERT GAS FLOODING SYSTEM	51
9.	GENERAL SPECIFICATION FOR MICROPROCESSOR BASED INTELLIGENT FIRE DETECTION AND ALARM SYSTEM	51
10.	GENERAL SPECIFICATION FOR HYDRANT SYSTEM& FIRE WATER PUMP HOUSE	51
11.	ERECTION, TESTING, COMMISSIONING & PERFORMANCE GURANTEE	51-67
12.	DRAWINGS AND DOCUMENTS	67-69

© 2022 MECON Limited. All Rights Reserved

01.0 INTRODUCTION

This general technical specification covers the following fire protection systems:

1. High Velocity Water Spray System
2. Medium Velocity Water Spray System
3. Clean Agent Inert Gas Flooding System
4. Automatic High Expansion Foam System
5. Passive Fire Protection
6. Portable Fire Extinguishers
7. Sand Bucket

02.0 INSTRUCTIONS TO THE BIDDER

02.01 General

1. The instruction to Bidder shall be read in conjunction with the Notice Inviting Tender (NIT), Tender documents, Technical Specifications (TS). Notwithstanding the sub-division of the documents into Notice Inviting Tender (NIT), Tender documents and Technical specification and parts, every part of each shall be deemed to be complementary and supplementary to each other.
   In case of any conflict/contradiction, the documents shall prevail over one another in the following order:-
   a. For all commercial, contractual and general conditions, Notice Inviting Tender (NIT), Draft Contract of this specification shall prevail.
   b. For any technical aspect/details, the technical specification elaborated in Volume - II with respect to all fire protection systems/equipments shall prevail. However, any contradiction either between various parts of document or in the content of the document itself shall be a matter of clarification to be obtained by the bidder from the purchaser. The purchaser's decision shall be final and binding.

2. The Bidder shall study the specifications, visit the site and satisfy himself thoroughly regarding the workability of the proposed Fire protection systems and shall take full responsibility for best quality of material and workmanship, guaranteed operation and smooth performance of all fire fighting systems/ equipment & accessories and integrated system as a whole. This technical specification is only a guidance to the bidder and hence all the items necessary for completeness, safe and satisfactory operation, guaranteed and reliable performance of proposed fire protection systems shall be included in his offer though these might not have been specifically mentioned in the technical specification / schedule of quantities. No extra claim will be entertained after placement of Order at any stage.

© 2022 MECON Limited. All Rights Reserved

3. Successful Bidder shall obtain approval from UADNL/MECON for selecting sub-suppliers and makes for any of the equipment/ parts.

4. An unpriced copy of the order on the sub-suppliers comprising all detailed specifications and the quantities of the material ordered, bill of material including necessary drawings thereof, shall be sent to UADNL/MECON immediately after such order is placed by the successful Bidder.

5. The purchaser reserves the right of selecting the make/model of equipment, PLC as well as Instrumentation items and any other item to be used for the project wherever necessary and the supplier shall agree to supply equipment of particular make/model without any cost implication to purchaser.

6. Any loss of plant and equipment after receipt at site due to imprudence, negligence and unsuitable treatment and handling on part of the contractor shall have to be replaced by the contractor at his cost.

7. Any existing services or other property if damaged or demolished during the course of execution either wilfully or negligently, shall be re-done/ re-erected by the Contractor at his own cost.

8. The bidder shall take all precaution against damages due to rains or other natural causes and no liability shall lie with the purchaser for any loss on this account.

9. Any underground service lines coming in the way of trench excavation etc. have to be supported adequately by the bidder to avoid any damage at his own cost. Prior approval is to be obtained from the purchaser for any excavation and for excavation wherever any trench/pipe lines/any service lines are crossing roads. In case of any damage, the same shall be rectified by the bidder without any cost implication to the purchaser.

10. Approval of drawings and/or inspection by UADNL and/ or their authorized representative shall not absolve or relieve the bidder from any of his obligation under this contract and they shall be wholly and solely responsible for the satisfactory operation and guaranteed performance of the systems and equipment forming part of the system.

11. This specification is issued for procurement from indigenous sources only. No foreign exchange or import license for importing equipment, components, raw

© 2022 MECON Limited. All Rights Reserved

materials or spares will be arranged for or provided by the purchaser. In case the equipment offered involves expenditure in foreign exchange, same shall be arranged and borne by the Bidder.

12. Commissioning spares shall be provided by the successful bidder.

13. Any equipment / material which in any way fails to meet the requirements of the specification will be rejected by the purchaser and such equipment / material shall not be used under the contract. The successful Bidder will be required to promptly furnish new material at his cost without hampering the overall schedule of commissioning of the project.

14. Any changes or difficulties which might be encountered during the execution of work or any other problems due to local conditions which are not anticipated / included in the tender document shall fall under full obligations of the successful Bidder. No claim on account of the same and for any ambiguity in any respect will be entertained after placement of order by Purchaser.

15. The equipment covered in this specification shall conform to the technical specification, general requirements and relevant latest Indian standards / codes in respect of dimensions, size, material, manufacture, inspection, testing, painting, packaging, etc. as applicable. Where Indian Standards are not available or where not specifically mentioned, International standards shall be followed with prior approval of Purchaser.

16. The Fire Protection systems shall be designed & engineered, manufactured, assembled, tested and commissioned as per the standards laid down in this specification. Detailed instructions on such aspects if not indicated in the TS/GTS shall be as per the latest standards, codes and recommendations of the TAC/NFPA/BIS/OISD. Where these standards are not specific, other equivalent international standards shall be used with the approval of Purchaser.

17. All material, dimensional standards, tolerances, process of manufacture and testing procedures shall be in accordance with the latest revision of the Indian standard codes/ International codes specified in this Tendering Specification. Where such suitable standards are not mentioned, any acceptable Indian/International Standards shall be adopted with prior approval of the Purchaser.

18. All equipment supplied shall allow access to facilitate connecting up, inspection, maintenance and repair and shall operate satisfactorily under such variations of load,

© 2022 MECON Limited. All Rights Reserved

pressure and climatic conditions as may occur during working.

19. All documents, instructions, name plates etc. shall be written in English language. All weights, dimensions and units shall be in metric system.

20. The items described in the specification are indicative and not exhaustive. The Bidder shall visit the site and assess the volume of work and workability. Accordingly, bidder shall provide all the equipment, item and material required for the Fire Protection systems to complete in all respects and include the same in his offer.

21. The Bidder shall be responsible for completeness of supplies, work and services to make the system complete and in proper operation. Any equipment and material not specifically mentioned in this tendering specification, but required for safe, smooth and efficient operation and guaranteed performance of the Fire Protection system shall be deemed to be included under the scope of work of the Bidder. No claim/ extra claim shall be entertained on this account after placement of Order.

22. Purchaser reserves the right to reject all or any of the offer fully or partly without assigning any reasons, whatsoever.

23. The Bidder shall submit the Quality Assurance Plan containing the overall quality management and procedures which he proposes to follow for performing the work during various phases of execution.

24. At the time of award of contract, the detailed Quality Assurance Plan to be followed for execution of the contract will be mutually discussed and agreed to.

25. Materials used and equipment supplied shall be new and the best of their kind and shall comply with the latest revisions of all relevant standards. Manufacturer's certificates shall be furnished by the successful Bidder for the material used.

26. As a minimum requirement, the contractor shall identify a resident quality engineer, safety officer and site supervisor to coordinate with department and ensure the quality job completion in specified time.

27. Wherever applicable, the equipment/supplies offered shall also conform to the provision of statutory regulations of the Government of India and the Government of Andhra Pradesh and other regulations in force such as Indian Factories Act, Indian Electricity Rules, Chief Controller of Explosives, Nagpur (PESO), Insurance Agency

© 2022 MECON Limited. All Rights Reserved

etc. Any permission from statutory bodies, if necessary, for execution of work shall be sought and arranged by the Bidder at his own cost.

28. The technical specifications for Fire Protection system elaborated in different chapters are generally based on TAC codes (India) / NFPA codes USA, BIS specification and OISD norms as applicable.

29. The Contractor shall supply as per the preferred/approved makes of equipment/ supplies, as given in the relevant clauses of TS. In case of any deviation from the preferred list of makes for bought-out items, prior written approval shall be obtained from the Purchaser. Purchaser reserves the right to refuse approval for additional makes.
30. Deviations from the Tender Document are not acceptable.

31. The Tenderer shall carefully check the enclosed Technical Specification and shall satisfy himself to the suitability of the equipment as specified in the Technical Specification and shall take full responsibility for the efficient operation and guaranteed performance of the equipment offered.

32. Offer of the Tenderer shall be strictly as per the stipulations of the Technical Specification enclosed herewith. Any offer with deviations in equipment selection from this Technical Specification shall be considered non-responsive and may be liable to be rejected summarily. However, the Tenderer may offer deviations from the main offer as separate annexure with corresponding add-on and take-off prices.

33. The Tenderer shall study the specification, visit the site and satisfy himself regarding the workability of the existing and proposed system and shall take full responsibility for the design of the equipment / system /sub-systems, quality of material, workmanship, guaranteed operation and smooth performance of the equipment / system / sub-systems. This Technical Specification is intended to provide general guidance to the Tenderer and as such, all items, even though not specifically mentioned in the TS, but considered necessary for safe and satisfactory operation and guaranteed performance of the offered equipments / system / sub-systems, etc. shall be considered to be included in the scope of work of the Tenderer.

34. The Tenderer's responsibility includes getting the approval of drawings and equipments to be installed from the statutory authorities / bodies wherever required. Any suggestions / comments given by the statutory authorities shall be duly incorporated by the successful Tenderer to the satisfaction of the statutory authorities without any price implication to the Purchaser.

© 2022 MECON Limited. All Rights Reserved

35. Tenderer shall ensure that the makes of all bought out items will be as per the preferred / approved makes.
36. The Tenderer shall clearly bring out to the knowledge of the Purchaser any deviation or exclusion from the Technical Specification in respect of scope of work or technical specification of different parts of equipment, or any other details mentioned in the above documents.

37. The Tenderer shall warrant that the equipment to be supplied shall be new and best of its kind and in accordance with the contract specifications and free from defects in material and workmanship. The Tenderer shall warrant for satisfactory performance of the equipment for a period stipulated

38. The successful Tenderer shall submit the details like make, type and model, operating parameters, materials of construction etc. of various equipment viz. strainer/filters, valves and appurtenance along with manufactures catalogues and technical literature for Purchaser's approval at detailed engineering stage and final selection of equipment shall be done after due approval of the Purchaser without any cost implications to the Purchaser.

02.02 **Bidder's Licence**

1. The bidder shall possess a valid and competent Contractor's license issued by the Licensing authorities of the Govt. of Andhra Pradesh or other States for carrying out the type, nature and magnitude of the work covered in this specification, in the state of Andhra Pradesh. Copy of the bidder's license shall be made available to the purchaser for verification during execution of contract if required.

2. All linemen, wiremen, electricians, welders, supervisors and engineers engaged by the bidder or his sub-bidder shall possess necessary valid license issued by the statutory authority and the same shall be submitted for verification, if called for.

02.03 **Make & Interchangeability**

1. The make of major equipment shall be limited to preferred makes indicated under `List of preferred makes'.

2. Makes of all other equipment and accessories are subject to prior approval by the purchaser.

© 2022 MECON Limited. All Rights Reserved

3. Similar equipment and components shall be of same make. Equipment of same type and rating shall be interchangeable

02.04 Safety

1. All equipment shall be complete with approved safety devices wherever a potential hazard exists and with provision for safe access of personnel to and around equipment for operational and maintenance functions. The design shall include not only those usually furnished with elements of machinery but also the additional covers, stairways, ladders, steel structural platforms for operator's control panels handrails, partitions etc. which are necessary for safe operation of the plant.

2. All danger and caution notice boards shall be both in English and Hindi languages.

3. In case the work is carried out at night or in the obscure day light, prior approval of purchaser will be obtained in writing from the purchaser and adequate arrangements for flood lighting, safety in the working area shall be made by Bidder at his own cost and got approved by the Purchaser before commencement of work.

4. The safety posters/regulation for prevention of accidents shall be displayed by the Bidder at appropriate places. Notices and warning signs shall be displayed for all sources of dangers.

5. All safety measures as required to be adopted as per the statutory regulations and the safety rules of the plant shall be strictly followed by the Bidder during the execution of the Contract.

6. Adequate number of first aid boxes and as defined in the Andhra Pradesh State Factories Rules shall be provided and maintained at work sites.

7. The contractor shall ensure that the item supplied by them are absolutely safe for use in the stipulated work environment & confirm to applicable safety norms and standards.

02.05 Operation and Maintenance Manual

Operation & maintenance manual of suppliers shall include Technical literature, principle of working, installation, commissioning & operation procedures, recommended maintenance schedules & procedures. Dos & Don’ts of operation / maintenance settings, recommended practice of handling etc.

© 2022 MECON Limited. All Rights Reserved

03.0 GENERAL SPECIFICATIONS FOR PORTABLE FIRE EXTINGUISHERS

03.01 Special Instruction To Tenderer

03.01.1 Portable fire extinguishers bearing IS marking shall only be supplied.

03.01.2 The following information shall be furnished with the tender.

(i) GA and cross-sectional drawings of the equipment covered in the specification.
(ii) Catalogues for the above.
(iii) Name and address of manufacturer for various equipment.
(iv) Test pressure.
(v) Materials of construction of various components.
(vi) Weight of each item/ assembly.
(vii) Copies of ISI approval/TAC approval/or other statutory authority certificates & Test Certificates
(viii) Reference list.
(ix) List of 2 years operation and maintenance spares as well as fast wearing item along with unit rates
(x) All the fire extinguisher shall bear ISI marked and it shall be as per latest relevant IS 15683.
(xi) All extinguishers shall be supplied along with the wall brackets / fasteners for wall mounted extinguishers. All the parts shall have IS approval. All the extinguishers shall bear IS marking on their body.

03.01.3 Necessary tools, spanners etc. required for regular operation/ maintenance of the equipment shall be supplied along with the equipment and shall be mentioned in the offer.

03.01.4 All equipment shall be so packed to avoid any damage during transit.

03.01.5 The tenderer shall guarantee satisfactory performance of all the equipment supplied by him.

03.01.6 No deviations or exceptions from this Specification shall be permitted without the written approval of the Purchaser / consultant. Intended deviations if any, shall be listed by the vendor on a separate sheet of paper at the time of bids submission and supported by reasons for consideration by the Purchaser / consultant.

© 2022 MECON Limited. All Rights Reserved

03.01.7 The purchaser reserves the right to increase or decrease the number of fire extinguishers during the contract period.

03.01.8 The purchaser also reserves the right to cancel any / or all the tenders without assigning any reasons.

03.01.9 The colour code and instructions on the extinguishers shall be as per relevant IS.

03.01.10 Compliance with this Specification shall not relieve the contractor of his responsibility of furnishing equipment and auxiliaries of proper design, materials and workmanship to meet the specific operating condition.

03.01.11 The successful tenderer shall furnish the details required as per the formats for inspection calls, dispatch and packing procedures developed for the project by the purchaser.

03.01.12 The successful tenderer shall show the performance test for each type of extinguishers at site and only after successful performance, extinguishers shall be accepted.

03.01.13 All the equipment shall be provided with test certificates. A certificate shall be produced from Chief Inspector of Explosives in case of Carbon dioxide extinguishers. IS/TAC approval shall be required for all types of extinguishers.

03.01.14 All portable extinguishers shall be supplied with mountings, accessories and installed along the column/walls near entry/exits and at height of approximately 1200 mm from the finished floor level. Wherever extinguishers are required to be installed on the steel columns of the building, the welding of the supporting fixture to columns shall be done by the successful tenderer. Necessary welding set for this job shall be arranged by the tenderer. The tenderer shall mark / provide border around the fire extinguisher installing point / fire point describing details as specified by fire officer in florescent paint.

03.01.15 **Performance Guarantee and Warranty**

The Equipment supplied shall be guaranteed for satisfactory performance as per General Condition of Contract (GCC).

All equipment supplied shall be subject to WARRANTY for a period of 12 months from the date of commissioning of the plant. The warranty shall cover defect, defect in

© 2022 MECON Limited. All Rights Reserved

material or workmanship for sub-assemblies as well as the total assembled equipment Initial fill of gas and other fire extinguishing media (including quantity required for PG test) shall be under the scope of tenderer and quantity/item used for testing/PG shall be replenished by the tenderer free of cost.

03.01.16 **Scope of Inspection**

- Verify and certify the material (equipment) offered meets all the details mentioned in the specifications.
- Welding materials/ rods shall be checked for meeting specifications/ standards. Wherever radiography welding is required, the same has to be inspected (only for welding applications).
- Extinguisher is as per relevant IS codes mentioned in the specifications.
- Checking performance of extinguisher on random basis.
- Check the fire extinguisher as per the design calculations.

03.02 **Technical Specification**

03.02.1 **Carbon dioxide Fire Extinguishers:**

CO2 type fire extinguishers 4.5 kg capacity as per IS-15683 (Latest edition) and ISI marked with 13B fire rating. Seamless steel body cylinder shall confirm to IS-7285 with ISI mark. Brass squeeze grip/ wheel type valve, brass syphon tube, wire braided rubber hose, HDPE horn ,complete with initial charge, wall mounting bracket screws, individual cylinder shall be approved by Chief Controller of Explosive, Nagpur (CCE approval certificates for each cylinder).

03.02.2 **Dry Chemical Fire Extinguishers:**

Dry chemical powder Fire Extinguisher, gas cartridge type, capacity 6 kg, manufactured and tested as per IS 15683 (Latest edition) and ISI marked, filled with ISI marked Potassium bicarbonate powder, minimum class B rating of 21B., squeeze grip type valve of brass forging, deep drawn two piece body with no vertical weld with ISI marking the body & bottom ring is cylindrical in shape fabricated with mild steel sheet (IS: 2062) , treated internally and externally with epoxy powder anti-corrosive coating , fitted with minimum 400 mm EPDM hose with brass nozzle and nozzle holder on extinguisher body, the cartridge is manufactured as per IS: 4947(Latest edition) with ISI marked, brass forging neck ring, syphon tube brass, safety clip mild steel, extinguisher shall be painted with red color and provided with wall mounting brackets & screws, ISI marked shall be provided with each extinguisher.

© 2022 MECON Limited. All Rights Reserved

03.02.3 **Mechanical Foam Fire Extinguishers:**

Mechanical Foam Fire extinguisher gas cartridge type, capacity 9 liters with initial charge, squeeze grip type valve of brass forging, manufactured and tested as per IS: 15683(Latest edition) and ISI marked, minimum class B rating of 34B & minimum class A rating of 3A. The body & bottom ring shall be cylindrical in shape, deep drawn two piece body with no vertical weld fabricated with mild steel sheet (IS: 2062) treated internally and externally with epoxy powder anti-corrosive coating, minimum 400 mm EPDM rubber hose along with plastic foam making branch, branch holder shall be provided on extinguisher body, material of neck ring brass forging , siphon tubes & snifter valve shall be of brass, discharge fitting of brass , safety clip mild steel ,the gas cartridge shall be manufactured as per IS: 4947(Latest edition) and ISI marked, the refills are manufactured as per IS: 4989(Latest edition) with ISI marked, extinguisher body shall be painted with red color, provided with wall mounting brackets and screws, ISI marked shall be provided with each extinguisher.

03.02.4 **Fire Bucket:**

Galvanised mild steel fire bucket capacity 10 litres as per IS:2546 (Latest edition) shall be provided as Class A fire in various premises. The fire bucket should also bear ISI marking on their body. The requirement with respect to shape, design, material and finish shall be strictly according to this IS. The bucket shall be fabricated of MS black sheets to IS:1079 - 1968 (Grade 57 34 or grade 57 42). After fabrication bucket shall be galvanized. The body shall be in two valves joined together by butt welding. The top rim of body shall be wired and uniformly beaded. Thickness of body shall be 1 mm and dia of beading wire shall be 3.55 mm.

Top and bottom handles shall be provided for easy use of buckets.
For keeping buckets in the premises, metallic stands each accommodating 2-6 buckets as required, shall be provided.

04.0 GENERAL SPECIFICATION FOR PASSIVE FIRE PROTECTION

04.01 <u>Introduction</u>

Passive fire protection are an integral part of a complete fire protection system and are essential for prevention of spread of fire through openings in walls or floors. These measures are intended to contain a fire in the fire compartment of origin, thus limiting the spread of fire, excessive heat and corrosive, re-ignitable and fatal gases for a

© 2022 MECON Limited. All Rights Reserved

limited period of time, as determined by testing, which must bound installed configuration in all respects in order to comply with the law and regulations.

04.02 **Technical Specification**

04.02.1 **Fire Retardant Coating/Painting**

For vertical run of cables & PVC conduits, fire retardant coating will be provided for the whole length. For horizontal run of cables, 1 m length of fire retardant coating will be provided at every 5.0 m interval wherever cables cross any partition wall, floor or pass through any opening, coating shall be provided for at least 1 m length on either side. In addition to this all the cable joints shall be coated with fire retardant paint all around and or 1 m length on both the side of joint.

Specification

The Fire retardant coating / painting shall be in-tumescent / ablative, water based compound, supplied in a manufacturer seal container indicating manufacturing and expiry dates. The coating material shall be of water based in-tumescent / ablative compound resistance to hydrocarbon, acid and alkali attack, water and oil resistance and shall have good mechanical strength. It shall not affect capacity of cables and shall last the life of the cable.

Shelf life	-	15 to 20 years at room temperature.
Material	-	Water based in tumescent compound resistant to hydrocarbons, acid, alkali attacks.
Fire rating	-	Minimum 3 hrs.

Method of Application

Coating shall be applied by ordinary paint brush after cleaning the cables of dust and oil deposition. A minimum textured finish of 1.5 mm to 2.5 mm dry film thickness shall be achieved by applying the material a few times leaving intervals of at least 4 hours between each coat.

© 2022 MECON Limited. All Rights Reserved

Test

Fire coating material should have test certifications for fire survival test, ampacity test, accelerated ageing test, insulation test etc. as per stipulation of CBRI, Roorkee. Approval for the material shall be obtained from CBRI, Roorkee. The material shall be UL/FM approved.

The specification concerning the tests are as follows :

Fire retardancy test	-	IEEE 383
Flammability test	-	IS:10810 (Part 53)
Fire survival test, Electrical integrity test	-	IEC 331
Tunnel test, Chimney test etc.	-	ASTM D 2863 ASTM D 3806 ASTM E 69 ASTM D 1230

04.02.2 **Sealing of Cable Openings**

Cable fire stops/barriers shall be provided in following cases:

a. Entry/Exit area of cable/cable trays in various compartments of cable gallery/basement/tunnels having different fire loads

b. Under control panel/any other panel where cables are entering or going out.

c. In floor openings

These barriers shall provide for effective compartmentalization with a fire rating not less than minimum 3 hrs or fire rating of compartment itself whichever is mpre. The sealing system should be smoke and gas tight, mechanically sound besides being an efficient fire stop. It shall be possible to take out cables and provide new cables from Fire Stops/barriers at site.

Components of Fire Stops/Sealing system

Material shall be such that it will not create too much heat to affect rating of the cables, heat dissipation and cables performance under barrier condition. The system

© 2022 MECON Limited. All Rights Reserved

shall be of single component having minimum 3 hrs fire rating (it should have approval from CBRI, Roorkee).

04.02.3 **Testing and Evaluation**

The relevant specifications in respect of testing and evaluation of fire stop system are as under. The fire resistance for the door shall be at least 3 hrs duration.

Building Material Testing	-	BS:476 (Part 8)
Building Construction Material	-	Fire Testing
	-	ASTM E 199
Through Penetration Fire Stops	-	ASTM E 814
Fire Stop Penetration – Fire Test	-	UL-1479
Fire Tests – elements of building construction	-	ISO 834
Fire Tests on buildings and structures	-	IS:3809
Method of Fire Test of Fire Stops	-	IS:12458
Code of Practice for fire protection of cable runs	-	IS:12459

Fire Stop materials shall have approval/certification from Govt. recognised laboratories like CBRI Roorkee, RTC, Delhi or ERDA Baroda.

04.02.4 **Partitions in Cable Channels/Tunnels/Galleries**

In all cable channels/tunnel/galleries partition walls shall be provided at every 30 m interval. Partition walls shall be constructed of RCC wall and shall have minimum 3 hrs. fire rating. Any openings left out after construction of partition wall shall be sealed with fire stops. Steel Fire doors should be suitably provided.

Steel fire door shall also be provided at every entry/exit of the cable galleries, cable tunnel, cable basement and oil cellars. Fire rating of the door shall be minimum of 3 hrs. All the fire doors shall confirm to IS:3614 and with ISI mark.

© 2022 MECON Limited. All Rights Reserved

05.0 GENERAL SPECIFICATION FOR HIGH VELOCITY WATER SPRAY SYSTEM (HVWS) AND MEDIUM VELOCITY WATER SPRAY SYSTEM (MVWS)

05.01 Special Instruction to the Tenderer

It is assumed that the tenderer has studied the specification and satisfied himself regarding the workability of the proposed system and takes full responsibility for the proper system design, best quality of material and workmanship, guaranteed operation and smooth performance of all the equipment and accessories. The Tenderer shall satisfy the Purchaser that he possesses the necessary technical experience for design and has at his disposal suitable facilities and crew to ensure that his work shall be of the best quality and workmanship.

Any loss of plant and equipment after receipt at site due to imprudence, negligence and unsuitable treatment and handling shall have to be replaced by the tenderer at his cost. Any existing services or other property if damaged or demolished during the course of execution either wilfully or negligently, shall be re-erected by the tenderer at his own cost.

Existing underground service lines coming in the way of trench excavation etc. have to be supported adequately by the tenderer to avoid any damage at his own cost. Prior approval is to be obtained from the purchaser for excavation wherever any trench/pipe lines are crossing roads. In case of any damage, the same shall be rectified by the tenderer without any cost implication to the purchaser.

The approval of drawings and/or inspection by Purchaser and/or their authorised representative shall not absolve or relieve the Tenderer from any of his obligation under this contract and they shall be wholly and solely responsible for the satisfactory operation and guaranteed performance of the systems and equipment forming part of the system.

This specification is issued for procurement from indigenous sources. No foreign exchange or import licence for importing equipment, components, raw materials or spares will be arranged for or provided by the purchaser. In case the equipment offered involves expenditure in foreign exchange, same shall be arranged by the tenderer.

All material, dimensional standards, tolerances, process of manufacture and testing procedures shall be in accordance with the latest revision of the standard codes

© 2022 MECON Limited. All Rights Reserved

specified in this Specification. In case where such suitable standards are not mentioned, any acceptable Indian/International Standards shall be adopted.

The items described in the specification are indicative and not exhaustive. The Tenderer shall provide all the equipment and material required for the system to complete in all respects.

At the time of award of contract, or at any date preferred by the purchaser the detailed Quality Assurance Plan to be followed for execution of the contract will be mutually discussed and agreed to.

The systems shall be designed & engineered, manufactured, assembled, tested and commissioned as per the standards laid down in this specification. Detailed instructions on such aspects if not indicated shall be as per the latest standards, codes and recommendations of the TAC/NFPA. Where TAC standards are not specific, NFPA or other equivalent international standards shall be used with the approval of Purchaser/ Consultant.
The safety posters/regulation for prevention of accidents shall be displayed by the Tenderer at appropriate places. Notices and warning signs shall be displayed for all sources of dangers. All electrical drives and equipment must be equipped with safety devices. The safety provisions shall conform to the recognised standards, safety codes and statutory regulations. All safety measures as required to be adopted as per the statutory regulations and the safety rules of the plant shall be strictly followed by the Tenderer during the execution of the Contract. Adequate number of first aid boxes as defined in the State Factory Rules shall be provided and maintained at all work sites.

The tenderer shall possess a valid and competent tenderer's licence issued by the Licencing authorities of the State Government for carrying out the type, nature and magnitude of work covered in this specification. Copy of the tenderer’s licence shall be made available to the owner/consultant for verification during execution of contract if required.

All linemen, wiremen, electricians, welders, supervisors and engineers engaged by the tenderer or his sub tenderer shall possess necessary valid licence issued by the statutory authority and the same shall be submitted for verification, if called for.

© 2022 MECON Limited. All Rights Reserved

05.02 **Inspection**

The tenderer has to submit an inspection procedure for all items to be supplied by him within 4 weeks of placement of order. The inspection procedure shall be finalised and approved by the purchaser.

No equipment or part item shall be despatched without provisional acceptance certificate and despatch instructions issued by the purchaser.

All equipments, assemblies and subassemblies shall be shop tested as per relevant standards and test certificates to be submitted by the tenderer. Purchaser's representatives and personnel from Fire Department shall have the option to visit the place of manufacture for joint stage inspection. All equipments shall be inspected by the purchaser before despatch of the equipment. The tenderer has to make all arrangements for providing the necessary tools, tackles and instruments free of cost to carry out the inspection.

05.03 **Description of the System**

HVWS & MVWS envisaged is a special fixed pipe system connected to a reliable supply of adequate quantity of water and equipped with spray nozzles (projectors) for specific water discharge and impingement over the surface or area to be protected. The piping system is to be connected to the water supply through an automatically actuated valve (deluge valve) which can initiate flow of water. Deluge valves for the spray system are to be actuated by an automatic detection system which in the case of transformers and LPG/Propane storage consists of quartzoid bulb detectors mounted around the protected area and for cable galleries these are part of fire detection & alarm system. HVWS system shall be installed for protection of transformerhaving capacity more than 10 MVA or having oil storage more than 2000 lts. Cable galleries/basements/cellars/tunnels/vaults/spreader rooms and LPG/Propane storage area shall be protected by MVWS system. A bypass arrangement for the deluge valve assembly shall be considered. All instrumentation points actuated by the FDA system shall be addressable and controlled by FDA panel.

05.04 **Main Components of the System**

The Deluge System shall be provided with the following major components:

i. Deluge Valve Assembly complete with trim accessories (Electric & Hydraulic release trim).

© 2022 MECON Limited. All Rights Reserved

ii. Water Supply at high Pressure
iii. Butterfly Valve
iv. Gate Valve
v. Y-type Strainers
vi. Spray Nozzles
vii. Quartzoid Bulb Detectors
viii. Pipes, fittings and fixtures
ix. Pressure gauges, pressure switches, solenoid valves, MCP switch.
x. Deluge Valve Local Control Panels and cables
xi. Fire detectors
xii. De-watering pumps

05.05 **Operation of the System**

Initially, delivery line should be pressurised upto deluge valve with the help of electrically driven Main Pump/Jockey pump and the water line pressure upto deluge valve should be maintained at around 8.8 Kg/cm2. The Q.B. detector line should be pressurised to a pressure of 4 Kg/cm2 with help of water which should be tapped from the header itself. Deluge valve clack is kept in horizontal position in normal condition due to balanced hydraulic pressure on two sides of the clack.

In case of transformer or LPG/propane storage fire, temperature will rise all around the transformer or LPG/propane storage area. On reaching a predetermined temperature (generally 30°C above ambient temperature) quartzoid bulb detectors, which are installed on pressurised water line (water for which is tapped from the main header itself), will shatter. As the bulb shatters, water in the detector line gets released through the detector openings and water pressure in detection line drops rapidly. This results in creation of pressure differential in the deluge valve and leads to latter's actuation. During this operation pressure in the water delivery line falls rapidly resulting in start up of main electrical driven pump. In case of power failure, pressure in the header shall go on decreasing causing start up of diesel engine driven pump.

In case of cable galleries/basements/cellars/tunnels/vaults/spreader rooms the actuation of deluge valves are effected by signal from fire detection and alarm system provided in the premises. Cable galleries shall be provided with multi criteria combination of rate of rise heat detector and photoelectric smoke detector. These have been described in detail in FDA specification. In the event of fire in the premises, the detection system shall give signal to Main Fire Alarm Panel (MFAP) which in turn shall actuate the solenoid of the deluge valve concerned. There shall be provision for manual operation of the system also by operating quick opening valves of each deluge valve.

© 2022 MECON Limited. All Rights Reserved

List of Control /Power Signals

Following signals / controls shall be required on the Main fire alarm control panel from each of the deluge valve of the Spray system:

i. Fire alarm signal from each Zone/premises through the actuation of pressure switch located on the detection line near to Deluge valve (DV) – very-very low water pressure (in case of actual fire).
ii. Low pressure indication in Main header line.
iii. Deluge valve / solenoid valve fail to open after command to solenoid valve incase of fire from each zone/premises.
iv. Audio-visual alarm from DV to know that it has operated with actuation of pressure switch located on the delivery side of each Deluge valve.
v. ON/OFF command to operate solenoid valve of DV at water line from main fire alarm panel as well as from local DV panel.
vi. 24V DC power shall be provided for solenoid valves from the FDA system.
vii. 24V DC Power failure alarm /Trip alarm.
viii. 24V DC Battery low alarm.

LGP/Propane storage and transformers:

1. Detection of fire on bursting of QBD bulb shall be transmitted to DV local control panel and main fire alarm panel through pressure switch installed on detection line.
2. Successfully actuation of DV after detection of fire shall be transmitted to DV local control panel and main fire alarm panel through pressure switch installed on DV downstream pipe.
3. Failed to actuate DV after detection of fire shall also be transmitted to DV local control panel and main fire alarm panel through pressure switch installed on DV downstream pipe.
4. Failed to actuate DV due to malfunctioning of solenoid shall also be transmitted to DV local control panel and main fire alarm panel through pressure switch installed on DV downstream pipe.

Local Control Panel

The fire alarm local DV panel shall be provided with minimum facilities

1. DV operated
2. Power On (Indication)
3. Very Low water Pressure (fire signal)
4. Solenoid fail to open signal

© 2022 MECON Limited. All Rights Reserved

5. Push Button (Break Glass Type)- to operate solenoid valve of Deluge valve
6. DV fail to open
7. Electronics Hooter
8. Switch for power On/Off
9. Push Button (Break Glass Type)
10. Acknowledge switch for Alarm accept

Note: Local deluge valve panel, main alarm panel, detectors and other items of FDA shall be micro-processor based (intelligent type) system.

05.06 **Design Criteria**

Following salient parameters shall be followed for the design of the system.

i. Water application rate for HVWS - 10.2 lpm/m2 of the surface area of the entire transformer including bottom surface, radiators etc. For MVWS in cable galleries/basements/cellars/tunnels/vaults/spreader rooms, 6.1 lpm/m2 on each tray and inLPG/Propane storage area water application rate shall be 12.2 lpm/m2 of all the exposed surface areas of the equipment/areas to be protected. The working pump capacity shall be decided based on the water requirement (whichever is higher) and selection of pump shall be from TAC approved pump capacities. The capacity of water reservoir shall be equal to at least one hour pumping.

ii. The system shall be so hydraulically designed that the pressure at the hydraulically most remote projector in the network shall not be less than 3.5 bars for outdoor transformer and 2.8 bar for indoor installations. For cable galleries/basements/cellars/tunnels/vaults/spreader rooms /LPG/Propane storage area also, Pressure at remotest sprayer - not less than 2.8 bars.

iii. Velocity in the main header up to deluge valve shall be maximum 3m/s. However, velocity from Deluge valve upto spray nozzles shall be 5m/s.

iv. Quartzite bulb detectors shall be installed in two rings one at top and another at bottom around the protected area. Maximum spacing between detectors shall be 2.5m.

v. Projectors shall be installed in rings encircling the protected area. One ring shall be provided at the top and subsequently rings for every 3 m from top to bottom shall be provided.

© 2022 MECON Limited. All Rights Reserved

vi. Detectors around the transformer to be considered in rows as per TAC/ Vds / FM /NFPA / LPCB / BIS guidelines.

vii. Distance between transformer surface and pipe shall not exceed 1000 mm.

viii. Distance between transformer surface and projector nozzle shall be kept between 500 mm to 800 mm. However, this shall be revised during detail engineering as per electrical norms requirements.

ix. Distance between transformer surface and detector shall be within 300 mm.

x. Maximum distance of detectors from flange of oil pipe shall be 300 mm.

xi. Distance between detectors shall not exceed 2.5m

xii. No. of transformer considered under fire at a time (largest) – One.

xiii. Proper drainage system and adequate dewatering pumps shall be in the scope of Bidder.

xiv. The header shall be laid underground and tappings for the individual deluge valve shall be taken there from.

xv. Q.B. detectors shall be installed in rings as per TAC norms around the protected area. Maximum spacing between detectors shall be 2.5 m.

xvi. Projectors (for transformers) shall be installed in rings encircling the protected area. One ring shall be provided at the top and subsequently rings for every 3 m from top to bottom shall be provided. The spares shall be installed in rows at the central aisle between the cable tray and spaced at not more than 2.5 m from each other.

xvii. There shall be common header for HVWS and MVWS systems which shall be fed water from the pump dedicated for the spray system. The hydrant header and spray system (HVWS & MVWS) headers shall be inter-connected with a non-return valve in between so that hydrant system can be a back-up for the spray system.

xviii. In cable galleries/basements/cellars/tunnels/vaults/spreader rooms, the protected area shall be divided into several zones, each of which shall be fed by

© 2022 MECON Limited. All Rights Reserved

individual deluge valve. In event of fire, water shall be sprayed on the zone concerned (i.e. zone under fire) along with preceding and succeeding zones. Zone lengths for cable galleries shall be 30 m.

xix. Distribution of sprayers in cable galleries/basements/ cellars/ tunnels/ vaults/ spreader rooms: The sprayers shall be installed in rows at the central aisle between the cable trays and spaced at not more than 3 m from each other.

05.07 Equipment Specification

05.07.1 Deluge Valve Assembly

Deluge valve assembly functions on differential pressure operation allowing quick opening of the valve and thereby rush of water to the protection system. The valve consists of inlet, outlet and priming chamber. The inlet and outlet chambers are separated from the priming chamber by the valve chamber and a diaphragm. In the `Set' position, pressure is applied to the priming chamber through a restricted prime line. The pressure is trapped in the priming chamber and holds the clapper on the seat due to the differential design. In the `Set' position the clapper separates the inlet from the outlet keeping the system piping dry. When the pressure is released from priming chamber, the clapper moves and allows the inlet water supply to flow through the outlet and to the water spray nozzles.

The deluge valve under reference shall be a control valve assembly which will operate on pressure difference in the deluge valve assembly and also by operating MCP switch at annunciation panel in control room.

Deluge System Description (Electric & Hydraulic release trim): - A deluge system is intended for suppressing fire by spraying water under pressure on the area to be protected in the shortest possible time. A deluge system has detection system and suppression system.

The detection system has pipeline network over / around the area to be protected. The suppression system has fixed open spray nozzles attached to the pipeline network installed over the area to be protected. Once the deluge valve gets actuated the water flows into the piping system and discharges from all sprinklers attached thereto
Major components of deluge valve assembly shall consist of the following:

1. Isolation valves
2. Inline strainer

© 2022 MECON Limited. All Rights Reserved

3. Deluge valve proper
4. Actuator/pilot assembly
5. Water motor gong
6. Drain valve
7. Pressure gauges
8. Solenoid valve
9. Pressure switches

The deluge valve shall be UL / FM approved make.

Deluge Valve

A type of system actuation valve that is opened by the operation of a detection system installed in the same areas as the spray nozzles or by remote manual operation supplying water to all spray nozzles. It is used for fast application of water in a spray system over the area to be protected

Table 01 Technical Parameters of Deluge Valve

S.N.	Parameter	Description
1.	Make	As per approved vendor list
2.	Fluid	Clean Water
3.	Type	Electric and Hydraulic Release Trim
4.	Type of Actuation	Electrically / Hydraulically actuated
5.	Size	As per approved drawing
6.	End Connection	Flanged end
7.	Mounting	Vendor to decide
8.	Material of Construction	
	Body	Cast Steel ASTM A 216 WCB
	Diaphragm	Neoprene Rubber
	Bolt	Carbon Steel
9.	Hydraulic Description	
	Hydraulic Test Pressure	25 kg/cm^2 (Min.)
	Working Pressure	8.8 kg/cm^2 (Max.)
10.	Painting	First Coats: 2 coats of red oxide primer Outside Coats: 2 coats of red oxide primer and 2 coats of synthetic enamel paint

© 2022 MECON Limited. All Rights Reserved

		Finish Coat: Fire Red (IS: 5) Shade no. 536
11.	Inspection & Testing	Verification of test certificate from approved test house at site by purchaser inspection team.
12.	Approval	UL / FM

05.07.2 Deluge Valve operation

Deluge valve is a quick release, hydraulically operated diaphragm actuated type of valve. It has three chambers, isolated from each other by the diaphragm operated clapper and seat seal. While in SET position, water pressure is transmitted through an external bypass check valve and restriction orifice from the system supply side to the top chamber, so that supply pressure in the top chamber act across the diaphragm operated clapper which holds the seat against the inlet supply pressure because of the differential pressure design.
On detection of fire, the top chamber is vented to atmosphere through the outlet port via opened actuation devices. The top chamber pressure cannot be replenished through the restricted inlet port; thus, it reaches less than half the supply pressure instantaneously and the upward force of the supply pressure lift the clapper allowing water to enter the system piping network and alarm devices.

Isolating valves shall be provided before and after deluge valves to facilitate the testing and maintenance of the system.

05.07.3 Deluge valve housing assembly

Deluge valve assembly room or deluge valve assembly house shall be provided to protect the deluge valve and associated equipment and accessories from mechanical damage as well as environmental condition. The deluge valve house comprising deluge valve, gate valves, instrumentations, deluge valve local control panel, associated piping. The deluge valve by pass arrangements shall also be maintained inside deluge valve house.

Deluge valve house shall be of RCC frame structure with brick wall construction. Roof shall be of RCC. Deluge valve housing shall have one side opening with grill gate/door. MS grills/door shall be made from expandable metal sheets as per IS: 412 (Latest). Shortway and longway of the grill/mesh will be 40mm and 75mm respectively. Width and thickness of the mesh shall be 3.25mm and 1.60mm respectively. DV located inside the shop under roof/ceiling shall be provided with structural frame with fence with grill door.

© 2022 MECON Limited. All Rights Reserved

05.07.4 Spray Nozzles

Water spray nozzles for the Deluge system shall be of suitable orifice size and varying discharge angles to cover fully all the area supposed to be protected. The nozzles shall be of Stainless Steel. The nozzles shall be normally open type, Spray nozzles shall bear UL/FM/IS approvals. It shall also be provided with blow off plug.

Water Spray Nozzles shall be installed in such a way that the impingement pattern of the spray shall form on the surface and the impingement pattern of adjacent nozzles must overlap on surface area to be protected

Table 02 Technical Parameters of Spray Nozzles

S.N.	Parameter	Description
1.	Make	As per approved vendor list
2.	K-Factor	As per approved drawing
3.	Spray Angle	120^0 , 140°
4.	Material	Stainless Steel
5.	Approval	UL / FM / BIS

05.07.5 Quartzoid bulb detector:

For actuation of Deluge system in auto mode, heat detectors (QBD) will be used. It shall be provided with approved SS protection caps.

Table 03 Technical Parameters of QBD

S.N.	Parameter	Description
1.	Make	As per approved vendor list
2.	Area of Application	Spray System
3.	Fluid application	Water
4.	Working line pressure range	5.5 kg/cm^2 (Max.)
5.	Type	Glass Bulb
6.	Style	Pendent
7.	Coverage	Standard Coverage
8.	Temperature Rating	75 - 79 degree centigrade
9.	End Connection	½” BSPT
10.	Material of Construction	
	Frame	Brass
	Deflector	Brass
	Bulb	Glass

© 2022 MECON Limited. All Rights Reserved

S.N.	Parameter	Description
	Finish	Chrome Plated
11.	Inspection & Testing	Verification of test certificate from approved test house at site by purchaser inspection team.
12.	Approval	UL / FM / BIS

For actuation of Deluge system in auto mode, fire detectors (QBD) shall be used.

05.07.6 Y- type Strainer for Deluge Valve Assembly

`Y' type strainer shall be provided on the inlet side of each deluge valve assembly. The strainer shall prevent accumulation of foreign particles in the valve and thereby avoiding malfunctioning of the control valves. The material of construction of the y-strainer shall be of CS. The strainer inside shall be stainless steel (SS304). These strainers shall be so designed that prolonged use up to one year without cleaning the strainer will not hamper effective operation of the system.

Table 04 Technical Parameters of Y-Strainer

S.N.	Parameter	Description
1.	Make	As per approved vendor list
2.	Service Fluid	Clean Water
3.	Size & Quantity	As per approved drawing
4.	End Connection	Flanged end.
5.	Type	Y Type
6.	Degree of Filtration	30 Mesh / 34SWG
7.	Pressure drop clean & 50% clogged	6.3MWC (Max) & 6.8MWC (Max.)
8.	Ratio of inlet to strainer surface opening	1:4
9.	Material of Construction	
	Body	Cast Steel ASTM A 216 WCB
	Nozzle (End Flange)	
	Wire Mesh	Stainless Steel (SS-316)
	Gasket	IS: 11149-1984 (Reaffirmed 2009) Class-D
	Drain Plug	Carbon Steel
	Fasteners	Cast Steel (IS: 1367)
10.	Hydraulic Description	

© 2022 MECON Limited. All Rights Reserved

	System Pressure	8.8 kg/cm^2
	Hydraulic Test Pressure	24 kg/cm^2
11.	Painting	First Coats: 2 coats of red oxide primer Outside Coats: 2 coats of red oxide primer and 2 coats of synthetic enamel paint Finish Coat: Fire Red (IS: 5) Shade no. 536
12.	Inspection & Testing	Verification of test certificate from approved test house at site by purchaser inspection team.
13.	Approval	BIS

05.07.7 Solenoid Operated Valve

The solenoid operated valve shall be a 24 VD.C operated valve which will get energized on operation of MCP from annunciation panel. The status of its function (open/close) shall be indicated in the main control panel and field junction box/ local control panel. In case the solenoid valve fails to open within a stipulated time period, the corresponding signal shall appear in the control panel.

Table 05 Technical Parameters of Solenoid Operated Valve

S.N.	Parameter	Description
1.	Make	As per approved vendor list
2.	Valve size	½ inch
3.	Fluid application	Clean Water
4.	Working line pressure range	8.8 kg/cm^2 (Max.)
5.	Operating voltage	24V DC
6.	Position feedback required	Yes
7.	Working action	Direct Action
8.	Rating	Continuous (0-24bar)
9.	Material of construction	Stainless Steel (SS-316)
10.	Mounting	On Line
11.	Gland material	SS
12.	Provision of manual override	Nil
13.	Approval	UL / FM / BIS

05.07.8 Pipe, fittings etc.

M.S. pipe along with fittings and supports shall be provided. ERW heavy grade pipe shall be provided as per IS 1239 (Part 1) and IS 3589 for pipe sizes up to 150NB and

© 2022 MECON Limited. All Rights Reserved

above / including 200NB respectively. The MS pipe (heavy grade) fittings shall be provided as per IS 1239(Part.2) for size range 15 NB to 150 NB. Material Specification, FE 410 Grade shall be provided for pipes and pipe fittings.

05.07.9 Pressure gauges

All pressure gauges, pressure switches and solenoid valves shall be connected with a three-way valve.

Table 06: Technical Parameters of Pressure Gauge

S.N.	Parameter	Description
1.	Make	As per Preferred Vendor
2.	Area of Application	Fire Protection System
3.	Process Media	Clean Water
4.	System Pressure	Up to 10.5kg/cm2
5.	System Temperature	Ambient
6.	Size & Quantity	As per Approved Drawings
7.	Model	Vendor to Provide
8.	Dial Size	90mm
9.	Connection	¼” BSPT
10.	Mounting	Direct
11.	Range	As per system design
12.	Burdon Tube	Phosphorus Bronze
13.	Movements	Brass Moving Part
14.	Dial Type	White background black graduation scale with dual reading in kg/cm2 and PSI
15.	Case and Bazel	Polished Stainless Steel Case with positive seal against weather, moisture and dust.
16.	Window	Hardened Glass
17.	Accuracy	+/- 2% of FSD for middle half of scale
18.	Approval	UL / FM
19.	Catalogue	To be provided by vendor

05.07.10 Pressure Switch

Table 07: Technical Parameters of Pressure Switch

S.N.	Parameter	Description
1.	Make	As per Preferred Vendor
2.	Area of Application	Fire Protection System

© 2022 MECON Limited. All Rights Reserved

3.	Process Media	Clean Water
4.	System Pressure	Up to 10.5kg/cm2
5.	System Temperature	Ambient
6.	Size & Quantity	As per Approved Drawings
7.	Model	Vendor to Provide
8.	Adjustable Range	To be provided by vendor
9.	Adjustable Differential	To be provided by vendor
10.	Repeatability	+/-1% of FSR
11.	Sensing Element	SS-304 Seamless Bellow
12.	Wetted Parts	Brass
13.	Enclosure	DMC enclosed with painted steel cover, Weather proof to IP-66
14.	Contact	1No. SPDT
15.	Contact Rating	125V AC
16.	Cable Entry	½” NPT (F)
17.	Process Connection	3/8” BSP (M)
18.	Mounting	Direct
19.	Approval	UL / FM
20.	Catalogue	To be provided by vendor

There shall be a pressure switch on the outlet side of the deluge valve to indicate opening of the deluge valve in the main control panel.

05.07.11 Pipe & Fittings

Table 08: Technical Parameters of Pipes & Pipe fittings

S.N.	Description	Parameters
A.	**Equipment**	**Pipes <=150NB (Deluge Valve Downstream side)**
1.	Pipe Sizes <=150NB (Pipe sizes 40NB, 50NB shall not be used)	IS: 1239 Part-1 (Latest)
2.	Material & Manufacturing Process	GI ERW, Galvanised (Heavy Grade)
3.	Working Pressure	Minimum 10kg/cm^2
4.	Hydro Test Pressure	Minimum 15kg/cm^2
5.	End Condition	Plain End
6.	Media	Water
B.	**Equipment**	**Pipes (Deluge Valve Upstream side)**
1.	Pipe Sizes (80NB, 100NB & 150NB)	IS: 1239 Part-1 (Latest)

© 2022 MECON Limited. All Rights Reserved

S.N.	Description	Parameters
2.	Material & Manufacturing Process	MS ERW, (Heavy Grade)
3.	Working Pressure	Not less than 10kg/cm^2
4.	Hydro Test Pressure	Not less than 15kg/cm^2
5.	End Condition	Plain End
6.	Media	Water
C.	**Equipment**	**Pipes (from pump house up to Deluge Valve tapping point on spray main header)**
1.	Pipe Sizes > = 200NB	IS: 3589 (Latest)
2.	Material & Manufacturing Process	MS ERW, Fe410 (Heavy Grade)
3.	Working Pressure	Minimum 10kg/cm^2
4.	Hydro Test Pressure	Minimum 15kg/cm^2
5.	End Condition	Plain End
6.	Media	Water
D.	**Equipment**	**Pipe Fittings (Deluge Valve downstream side)**
1.	Pipe Fitting Sizes	IS: 1239 Part-2 (Latest)
2.	Grade	Galvanised, Heavy Grade
3.	Working Pressure	Minimum 10kg/cm^2
4.	Hydro Test Pressure	Minimum 15kg/cm^2
5.	End Condition	Plain End
6.	Media	Water
7.	End Connection	Threaded: Below 65NB Welded: 65NB and Above
E.	**Equipment**	**Pipe Fittings (Deluge Valve upstream side)**
1.	Pipe Fitting Sizes	IS: 1239 Part-2 (Latest), IS: 3589 (Latest)
2.	Grade	MS, Heavy Grade
3.	Working Pressure	Minimum 10kg/cm^2
4.	Hydro Test Pressure	Minimum 15kg/cm^2
5.	End Condition	Plain End
6.	Media	Water

Note: Reduced fittings in piping network for firefighting system shall not be used except concentric reducer.

© 2022 MECON Limited. All Rights Reserved

05.07.12 **Valves**

Valves shall be provided on pipe work for stopping and starting of flow, controlling flow rate, diverting flow, preventing back flow, controlling pressure, relieving pressure and for venting and draining of pipelines etc.

Valve selection shall be made based on the following considerations :

- Suitability of valve materials in regard of properties of fluids, temperature, pressure, erosion and shock.
- Valve size.
- Main function of the valve (viz. throttling, stop, permitting flow in one direction, diverting flow, relieving pressure etc.)
- Friction head losses.
- Ease of operation, i.e. method of actuation closing time.
- Maintenance considerations.

The valves to be provided shall include but not be limited to the following :

- Isolation valves on the main header at various locations.
- Gate valves in the branch pipes from header to DV and from DV to the served area.
- NRV on all pipe lines requiring unidirection flow only.
- Quick opening safety shut off valves.
- Manual drain valves.

05.07.13 **Pipe Support & Fixtures**

The Civil RCC pedestal supports is in the scope of the bidder. However, the bidder shall provide necessary civil pedestal as per site requirements as per the approved drawing for successful completion of the system.
The internal piping supports is in the scope of the bidder. The bidder to plan the pipe routing and the location of spray nozzles, deluge valves and manually operated valves. Bidder shall consider dedicated supports required for the pipe lines/spray nozzles etc. for the Deluge system.

Hume pipe of NP3 grade shall be provided at every crossing beneath the road, if any. The top of pipe for all underground pipes shall be maintained at minimum 1200mm below finished ground level. At locations where pipe is required to be crossed above

© 2022 MECON Limited. All Rights Reserved

road, the pipes shall run over structural gallery to be provided by the bidder and bottom most structural member of gallery shall be maintained at 6.0m (minimum) above road top level.

06.0 GENERAL SPECIFICATION FOR AUTOMATIC HIGH EXPANSION FOAM SYSTEM

06.01 General

Foam protection shall be based on the principal of blanketing surface of oil cellars/hydrauliccellars, enabling to cut-off the oxygen to the burning fuel thus achieving immediateextinguishment of fire.

Foam System is envisaged for oil cellars/Hydraulic cellars. The foam solution shall beproduced by introducing foam concentrate into the water stream by using bladder(diaphragm) pressure tank and a modified venturi device (Foam proportioner). The systemshall consist of deluge valve based fire water system, bladder tank, foam proportioner,foam generators etc. Bladder tank, foam proportioner, electrically actuated valve etc. willbe located at a safe place from the area to be protected. On receipt of fire signal from thefire detection system to discharge water for making foam solution near the cellar. The foamsolution thus formed is passed through the foam generators which will produce highexpansion foam and flood the oil premises as per NFPA -11 (latest edition) but maximumlimited to 3 minutes time.

Major component of the foam protection system are

- Water supply (Similar to MVWS and HVWS systems explained in the respective chapters)
- Deluge valve assembly (Similar to MVWS and HVWS systems explained in the respective chapters)
- Foam Generators (High expansion)
- Bladder Tank
- Foam Concentrate (high expansion UL listed foam concentrate)
- Foam proportioners
- Pipes, Valves & Fittings
- Electrics
- Detection by detectors(under separate package)

06.02 Bladder Tank

© 2022 MECON Limited. All Rights Reserved

Bladder Tanks are a component of a balanced pressure proportioning system that includes a pressure-rated tank with an internal elastomeric bladder for foam concentrate storage. Upon system actuation, incoming water applies pressure to the concentrate in the bladder, which supplies pressurized concentrate to the proportioning device. The device meters the foam concentrate into the fire water line, creating foam solution. The solution is then piped to the discharge devices protecting the hazard area.

The tanks shall be made out of 3 mm thick and base of min 4.75mm with steel sheets and shall be cylindrical in shape and installed vertically. Suitable arrangement shall be made to mount the tank on the floor by utilizing minimum possible area. The inside surface of the tank shall not be painted however; the external surface of the tank shall be painted with 2 coats of primer and one coat of yellow paint. The paint used shall be as per the Indian Standards and shall be corrosion resistant.

The tank shall be preferably of cylindrical shape with dished ends. The tank shall be capable of storing high expansion foam equivalent to 2 - 3 times system/zone requirement. Design of the tank shall be as per IS : 2825 or any international standards.

The tank shall be provided with adequate support, concrete pedestal to keep the tank above finished ground level. The tank shall be provided with foam concentrate supply connection with funnel connected to pipe extended upto bottom to avoid frothing, expansion dome, man hole / clean out, inspection hatch, gate valve for foam supply and delivery line, pressure vent, non-return valve, ladder (if required), level gauges and 25 NB drain valve. The manifold shall be connected to the foam concentrate tank outlet. All valves, pipes, opening flanges with matching flanges and other accessories on Foam tank shall be S.S. Flushing connection with gate valve shall also be provided.

A separate foam concentrate manually operated transfer pump (2 number) of suitable capacity shall be provided for refilling of foam concentrate into tank.

06.03 **High Expansion Foam Generators**

The approximate capacity of foam generators for each cellar shall be indicated in the offer. However, the capacity of the foam generators may be varied to suit the requirement and expansion ratio already specified in the TS .The foam generator shall be water driven type and shall not use any other sources of power for its movement.

The foam generators shall be made out to the following materials for the specified parts :

© 2022 MECON Limited. All Rights Reserved

Body	-	Stainless Steel
Pipe work & nozzles	-	Stainless Steel
Impeller	-	Aluminium epoxy painted
Turbine	-	Gun metal body and stainless steel shaft
Foam making net	-	Stainless steel
Nozzles	-	Stainless steel within built strainer

The foam generators shall be independent of foam inductors system. Suitable supports / brackets shall be supplied for fixing the foam generators in position. Foam Generator shall have UL/FM/Vds/LPCB approval.

06.04 **Piping and Supports**

All the piping, fittings and all accessories shall be same as indicated for HVWS/MVWS Systems.

However, entire piping conveying foam concentrate and foam solution shall be of medium grade (schedule 40) stainless steel conforming to latest IS Specification / Vds / FM / UL \ LPCB.

06.05 **Foam Concentrate**

Initial fill of the foam concentrate to be supplied by the Bidder shall be the total required quantity. 100% standby foam concentrate equivalent to 2 Nos. of largest Oil cellar capacity shall also be supplied. Foam concentrate quantity shall be equivalent to flooding the premises for a period of 30 minutes. This shall be filled in the foam concentrate tank as initial fill and the remaining shall be stored in foam containers of suitable capacity. Container shall be 20 to 30 liters plastic jerrycan, so that no contamination of foam concentrate due to the container material occur through out the life of the foam concentrate.

The foam concentrate shall have the following characteristics:

Induction rate	-	1% -3%
Expansion Ratio	-	1:750 to 1:1000

(it will vary depending upon the design and manufacturer's recommendations.)

All the Valves, Items between Foam concentrate storage tank to shall be of S.S.

© 2022 MECON Limited. All Rights Reserved

Storage capacity of the foam concentrate tank shall be atleast 2 to 3 times the actual quantity required for total flooding of protected area.

The foam concentrate to be supplied shall be of high expansion foam with the following specification.

Sp.gravity at 25°	~ 1.05 to 1.07	
PH value	= 7.6 to 8.0	
Viscosity in centre stocks at $25^{0}C$	:	(to be specified)
Minimum usable temperature	:	$1.6^{0}C$
Maximum usable temperature	:	$48.8^{0}C$

06.06 **Foam Proportioner**

Proportioning Equipment introduces the foam concentrate into a flowing stream of water to produce a foam solution. There are many methods of proportioning, but fixed foam systems typically use balanced pressure proportioning equipment. All balanced pressure systems use a modified venturi device called a proportioner or ratio controller.

Proportioners are available in a variety of sizes and styles to match required flow ranges and pipe sizes. Each proportioner consists of a body, inlet nozzle, and metering orifice—all of which are corrosion-resistant brass.

Proportioners are UL listed and FM approved with certain foam concentrates and used in conjunction with bladder tanks and pump proportioning skids.

06.07 **Miscellaneous Items**

The Bidder shall include all necessary bolts, nuts, brackets, hangers, supports, companion flanges etc., for completing the system in all respects. The paint shall conform to Indian Standard and shall anti-corrosive.

06.08 **Design Requirement**

System shall be designed and tested as per NFPA norms / UL / FM / Vds / LPCB.
Basic calculations for system i.e like no of generator, storage of foam concentrate , piping data, etc may be made available for our study.

© 2022 MECON Limited. All Rights Reserved

Foam system shall be operable through a deluge valve of required capacity. Zoning shall be done and each zone shall be fed by a separate Deluge valve system.

07.0 GENERAL SPECIFICATION FOR CLEAN AGENT INERT GAS FLOODING SYSTEM

07.01 General

The total flooding clean agent (inert gas: IG541-Inergen/ IG55-Argonite, 300bar only) system works on the principle of making the premises non-conducive to sustenance of fire therein by discharging sufficient volume of clean agent gases. The rapid discharge of sufficient volume of clean agent gases in to an enclosure creates inert atmosphere inside room, which causes suppression of fire. This is known as or names as total flooding system.

Clean agent gases conforming to NFPA-2001 (latest) shall be provided in computer rooms, server rooms, control rooms, PLC rooms, SCADA rooms, and important control rooms including false ceiling, room proper, false flooring.

07.02 System Description

The Inert clean gas total flooding system is an engineered system consisting of fixed nozzle and gas distributing network. The system shall be designed and installed in accordance with the NFPA 2001 (Latest Edition). Inert gas clean agent system will extinguish surface burning fire in Class – A, B & C hazards.

The system shall consist of various major components as listed below:

i. Gas
ii. Cylinder rack
iii. Gas Manifold
iv. Pressure reducing devices
v. Pilot Cylinder, cylinder valve assembly
vi. Cylinder Bank
vii. Electric Actuator
viii. Manual release push button
ix. Directional valves
x. Inhibitors and safety relief valves
xi. Flexible Hoses
xii. Discharge Nozzles
xiii. Pipe and Fittings

© 2022 MECON Limited. All Rights Reserved

xiv. Bracket Supports and Hangers
xv. Transportation trolleys
xvi. Name plates
xvii. Digital Warning signs(Audio & Visual)
xviii. Hooters/siren
xix. Digital type static weighing machine for weighing one no. cylinder at a time. However, Bidder shall provide one Trolley for each area for transportation of cylinders.
xx. Bank of standby cylinders fitted with cylinder head, valves with manifold.
xxi. All the components of clean gas agent system shall be UL/FM/Vds approved only.
xxii. Gas cylinder shall be certified from PESO, INDIA.
xxiii. Fire detection and alarm system (Excluded from this package)

The Inert gas clean agent is stored in metallic cylinder in a pressurized condition at 300Bar. A master cylinder will be fitted with Electric Actuator & manual actuator. Separate multiple cylinder bank dedicated for each risk area is provided close to the protected area. No. of cylinders in each bank will be determined as per volume of gas required for total flooding as indicated above. All the cylinders are connected to a discharge manifold by means of flexible hoses. The manifold is connected to piping network having discharge nozzles at the protected areas. All the piping is supported & clamped suitably to avoid vibration.

The system shall consist of "independent engineered storage" system with 100% (one hundred percent) connected reserve supply cylinders. The main or reserve supply cylinders shall be designed for the requirement of largest risk with directional valves for each of the
zones. Suitable selector switches shall be provided for "Normal/Standby" supply selection in the fire alarm system panel for each of the zone. The cylinders shall be located in a separate room civil building near to unit control room. This room shall be provided illumination facility, ventilation facility.

Each of the above areas / rooms shall be considered as a separate zone. All the above areas are air conditioned, provided with false ceilings and separated from the adjoining areas(both the above and false ceiling spaces) by brick walls.

Each zone shall be equipped with fire detection system. On receiving the fire signal from the detection system agent gas shall be released automatically after a set time delay and gas
shall be discharged into the enclosed space.

© 2022 MECON Limited. All Rights Reserved

The system shall comprise of the following mode of operation and actuation and cancellation facility etc. with necessary control panel.

System operation shall be possible by the following means :

a. Automatically due to fire detection in the protected area.
b. Operation of manual release push button located adjacent to protected area.
c. By operating manual lever provided on electrical / manual control head on pilot cylinder.
d. By push button actuation at Clean Agent control panel in manual mode.

The clean agent shall be discharged / actuated automatically after an adjustable time delay based on the detection signal received. The delay shall be minimum 30 seconds. In the local control panel of clean agent system, there shall be one hooter, which shall operate once the gas is released during time delay; there shall be pre-discharge alarm (audio + visual). Hooter shall follow the alarm once the gas is discharged.

The release of gas shall be preceded by an audio visual alarm in the affected area for alerting and evacuating the personal and for this purpose time delay of about 60 seconds (which is settable from the panel) between the initiation of release and actual release of gas. The exact time delay to be incorporated in the system shall be decided during detailed engineering.

To avoid an inadvertent mal operation and release of gas, on either of the model release operation (auto or manual), provision of manual interruption (i.e.) gas charge inhibition facility through a suitable device from a local control unit at a suitable location or from the panel shall be provided so that the agent release can be stopped within the time delay.

Detectors shall be provided in premises as well as in above false ceiling and below false flooring. Cross zoning of detectors shall be incorporated in such a way that the fire (either above false ceiling or below false ceiling) is detected by at least one detector of each type to activate automatic inert gas releasing system. However, audiovisual alarm shall be annunciated even if any one of the type of detector has detected the fire.

Necessary provision shall be made in the fire alarm panel for switching off the air-conditioning system and automatically as soon as the fire is detected.

Positive material Identification test shall also be performed.

© 2022 MECON Limited. All Rights Reserved

07.03 **Design Criteria**

Quantity of gas required for the system shall be based on the gas required to blanket the volume of the area to be protected and time that the discharge must be maintained to assure
complete extinguishing of fire within 10 sec after actuation.

i. Complete design and all the system components/equipment shall be approved and listed by UL/ VDS/FM.
ii. Design, manufacture and installation of inert gas fire extinguishing system shall be in strict accordance with NFPA 2001 (latest edition) and certified by UL / VDS/FM.
iii. 300 bar clean agent extinguishing system shall be designed and installed for below false floor, main room and above false ceiling of various risk areas.
iv. The design concentration shall be as per NFPA 2001.
v. The Physical properties and its discharge characteristic of clean agent shall meet the requirements of NFPA-2001 (Latest edition).
vi. The design calculation shall be supported by UL/VDS/FM listed software guidelines and shall have their approval.
vii. The system shall be designed based on the single largest risk area. In order to optimize the requirement of gas and considering the space for cylinder bank, it may be planned to club together requirement of two or more adjacent premises. Bidder to ensure that appropriate logic is followed for discharge of gas in respective premises.
viii. The system shall have 100 % Clean Agent filled standby cylinders along with manifold, directional valves and automatic change over for each risk area.
ix. The complete volume of the rooms including the above false ceiling shall be considered for estimation of quantity of gas and containers.
x. When determining the gas quantity, the leakage losses from the enclosure shall be taken into account by the supplier. The exact amount of gas to compensate for leakage compensation shall be designed by the Bidder taking into consideration the type and features of enclosure, unclosable openings if any and other considerations so that design concentration is achieved after stabilization of discharge. However, a minimum 20% margin to be considered as leakage compensation and extinguishing efficiency.
xi. Further volume of re-circulating type air conditioning system & its ductwork (at least up to the automatic fire dampers of the ducts) shall be considered as a part of the total volume so that the design concentration is achieved throughout the hazard area. Further gas quantity shall be adjusted for ambient pressure conditions.
xii. The system design does not permit provision of a common "STORAGE SYSTEM WITH DIRECTIONAL VALVES FOR MULTIPLE ROOMS, AREAS, ZONES".

© 2022 MECON Limited. All Rights Reserved

Hence, separate protection system with storage system, for each of the ROOMS, AREAS, ZONES with primary and 100% standby/ reserve supply shall be provided.

xiii. Both the main & reserve supply cylinders shall be permanently connected to the distribution piping through manifold and arranged for easy changeover from the panel.

xiv. The discharge time period shall be that the design concentration can be achieved within 60 seconds. The flow calculations shall establish this criteria.

xv. The quality of gas shall conform to relevant design standard ie: NFPA - 2001

xvi. Bidder shall include automatic actuation of the system by Fire detection and alarm in the premises concerned. Annunciation for system operated will be provided in MFAPand annunciation panel. Provision for fire delay and evacuation alarm shall also begiven.

xvii. Concentration of gas shall not exceed the NOAL and LOAL level as per NFPA guidelines.

xviii. Commissioning for at least one room shall be done by Clean gas agent (IG 541/IG-55)

xix. All electrics including power supplies and control interlocking, provision of MRPS,inhibitor, evacuation alarm, hooters, all components required for ventilation tripping etc. shall be considered in the design and supply.

07.04 System Requirements

07.04.1 Clean Agent gas

The quantity of clean agent gas provided shall be sufficient to protect the risk area with 100 % standby. Every individual risk shall have its own distributing pipe, nozzles, alarm and actuation system etc. The physical properties of clean agent gas shall meet the requirement specified in the NFPA 2001 (Latest Edition).

Both the main and standby cylinders shall be permanently connected to the distribution piping through manifold and auto change over. The clean agent discharge shall be substantially completed in a normal 60 seconds. For inert gases the measured discharge time is considered to be the time when the measuring device starts to record reduction of oxygen until the design oxygen reduction level is achieved. The min. oxygen concentration shall be as per NFPA 2001 (Latest Edition).

07.04.2 Flow Calculation

System flow calculations shall be performed using a calculation method listed or approved by UL/VDS/LPC/FM. The system designed shall be within the

© 2022 MECON Limited. All Rights Reserved

manufacturers listed limitations. Bidder shall provide the sufficient measure facilities in the risk areas to dissipate over pressurization due to release of clean agent and also provide calculation in support of same for each protected area.

The Bidder shall provide the approval certificate of software from UL listed along with design calculation.

07.05 **Clean Agent Quantity**

Minimum design concentration of Clean Agent gas shall be as per NFPA-2001 (Latest Edition) at 700 F by volume for Clean Agent fire extinguishing system based on approved / listed flow calculation method and having design concentration approved by UL/FMRC at 700 F (210 C) for the single largest risk.

Clean Agent concentration requirement shall be computed considering the volume of the class C high hazard area as specified. In addition to the concentration requirements as specified, 20% of the gas quantity as computed above, shall be added to compensate for leakages and extinguishing efficiency. The Bidder shall work out the quantity of Clean Agent as per NFPA 2001.

07.06 **Clean Agent Storage Cylinders**

i. Cylinders shall have approval from PESO , Nagpur in addition of UL/VDS/LPC/FM.
ii. All the storage cylinders (cylinder bank) shall be provided under an enclosure. It shall not be kept open to atmosphere.
iii. Cylinder bank : Required quantity of gas will be stored in seamless steel cylinders shall have UL and CCE Nagpur approval.
iv. The 300 bar Clean Agent storage cylinders shall be designed to hold Clean Agent at ambient temperatures.
v. Minimum design level pressure of storage cylinder shall be 300 bar. The design pressure for cylinder shall be suitable for the maximum pressure developed at 130^0 F (55^0 C).
vi. The cylinders shall be charged to a fill density or super pressurization within the range specified in the manufacturers listed manual.
vii. The total number of cylinders in the bank shall be determined depending on the volume of the premises to be protected. Bidder shall select the capacity of cylinder based on the storage space available and for effective replacement and inter changeability. All cylinders in the Bank and reserve bank shall be interchangeable.
viii. The cylinder shall be seamless and never retested, brand new never retested and month & year of manufacture shall be latest.

© 2022 MECON Limited. All Rights Reserved

ix. Each cylinder shall have a permanent name plate, specifying the agent, tare and gross weight in addition to the pressurization level, nominal agent volume.

x. Cylinder shall bear the mark of manufacturer, serial number, single test certificate issued by manufacturer and shall be duly approved by UL/FMRC/VDS/LPC.

xi. Cylinder shall conform to the requirement of NFPA 2001 (Latest Edition) and shall be compatible with the engineered system being provided along with design analysis.

xii. Each cylinder shall have pressure relief valve to protect the cylinders against excess pressure conditions. Pressure gauges with isolation valves on manifold shall be provided.

xiii. Automatic means such as check valve shall be provided to prevent agent loss if the system is operated when any cylinders are removed for maintenance.

xiv. Clean Agent cylinders shall be arranged in proper manner.

xv. In a battery of cylinders manifold together, leading to distribution piping and discharge nozzles for the risk to be protected, including below false floor and above false ceiling spaces, along with a reserve battery of Clean Agent filled cylinders with manifold and directional valves, including arrangement for automatic change over to any of the two banks after actuation of main cylinders to be provided in each risk area i.e. 100% reserve. Reserve cylinders shall be connected to the main header, so that incase of successive fire reserve bank can also be used.

xvi. The cylinder storage racks shall be provided for main as well as for reserve cylinders.

xvii. The manifold cylinders referred above shall be securely mounted on the floor and suitably supported in a rack with provision for convenient individual servicing, according to the manufacturers installation manual. Such servicing shall be possible without shutting down the system.

xviii. The Bidder shall indicate the space provision for storage of Gas Cylinders and Manifold Piping along with technical offer.

xix. The gas cylinders shall be provided with Base Plate, foundation bolts & nuts etc. so that, the entire load is evenly spread out over the entire plan area. No concentrated load shall be resulted from the mounting arrangement of the cylinder/containers.

xx. All the pressure, gauges/switches, manifold connections etc shall be easily removable for servicing / maintenance without any loss of gas.

xxi. All cylinders in the bank shall be interchangeable.

07.07 Discharge Nozzles

Discharge nozzles shall conform to NFPA 2001 (Latest Edition). The material of construction shall be of Brass and shall be UL/FM/VDS/LPC approved. Discharge nozzles used in the system shall be listed for the use intended for discharge characteristics. The selection of nozzle orifice shall be such that 95% of the minimum

© 2022 MECON Limited. All Rights Reserved

design concentration of gas is discharged within 60 seconds, through the nozzles of the system.

Each nozzle shall be permanently marked to identify the manufacturer as well as type and size of the orifice along with tag / part number, orifice code, or other suitable marking as specified in relevant norms / codes.

07.08 **Discharge Heads and Valves**

All valves under constant high pressure and those not under constant pressure shall have a minimum bursting pressure as per NFPA-2001 (latest) and also as per manufacturer's recommendations.

All discharge heads and valves shall be so arranged that these shall not be susceptible to mechanical, chemical or other damage.

07.09 **Discharge Nozzles**

Discharge nozzles shall be sufficient in number as per NFPA and so located that the gas discharge pattern shall completely cover the protected volume having adequate concentration in the high hazard locations.

07.10 **Lock Off Device (Inhibitor)**

Each system shall incorporate a suitable locking device to make the system inoperative before undertaking any repair and maintenance within the protected area. The system shall be capable of putting on normal operation after completion of the repair and maintenance.

07.11 **Caution Sign**

Necessary caution displays in the form of audio visual type indicating the hazards of inert gas flooding shall be installed at strategic places of the premises provided with total flooding system.
The visual display shall be of flashing type and audio hooter / siren shall be of distinct tone and capable of being heard in the range of 500m from source.

07.12 **Piping, Fittings**

© 2022 MECON Limited. All Rights Reserved

Pipes shall be of ASTM A53 or A106 type (seamless carbon steel high pressure Schedule 80 pipes). All pipe including manifold shall have minimum bursting pressure of 350 kgf/cm2. The complete distribution system shall be free from leakage when tested at a pneumatic pressure of 200 kg/sqcm with(all nozzle outlets closed. All sections of pipes having dead ends shall be fitted with suitable pressure relief devices designed to operate between 168 kgf/cm2 and 210 kg/sqcm and pipe fittings shall be provided as per the requirements specified in NFPA-2001 (Latest Edition).

All the pipes & fitting, testing pressure, bursting pressure, etc shall be designed and tested considering cylinder pressure at 200 kgf/cm2.

The Clean Agent piping and nozzles shall have to planned clearing following facilities coming on its route, in the areas where protection is being envisaged:.

· Path of AC ducts.
· Cabling in false flooring.
· Light fittings, detectors etc.

Table 09: Technical Datasheet of Pipes & Pipe Fittings for Clean Agent Total Gas Flooding System

S.N.	Description	Parameters
A.	**Equipment**	**Pipes - Downstream to Pressure Restrictor**
1.	Pipe Sizes	MoC: ASTM A 106
2.	Material & Manufacturing Process	Seamless Carbon Steel Pipe, Schedule 80
3.	Working Pressure	As per system designer
4.	End Condition	Bevelled End
5.	Media	Clean Agent Gas
B.	**Equipment**	**Pipes - Upstream to Pressure Restrictor and Manifold**
1.	Pipe Sizes (Pipe sizes 40NB, 50NB shall not be used)	MoC: ASTM A 106
2.	Material & Manufacturing Process	Seamless Carbon Steel Pipe, Schedule 160
3.	Working Pressure	As per system designer
4.	End Condition	Plain End
5.	Media	Clean Agent Gas
C.	**Equipment**	**Pipe Fittings**
1.	Pipe Fitting Sizes	As per NFPA 2001 (Latest)
2.	Grade	AS per NFPA Table A.4.2.2.2(a)

© 2022 MECON Limited. All Rights Reserved

07.13 **Operating Devices**

i. Operating devices shall include Clean Agent releasing devices or valves, discharge controls and shut down equipment necessary for successful performance of the system.
ii. The automatic Clean Agent system shall be of robust design and shall not be readily rendered inoperative easily. The Clean Agent system shall be designed to function properly for the temperature range specified in NFPA-2001.
iii. The Clean Agent cylinders shall be mounted on front and firmly supported in brackets in a manner that they will not be easily subjected to mechanical, chemical or other damage, which would render the system inoperative.
iv. In addition to Automatic actuation, there shall be a normal manual control for actuation, which shall be located so as to be conveniently and easily accessible at all times including the time of fire. This control shall cause the complete system to operate in its normal fashion.
v. Manual controls shall not require a pull of more than 40 lb nor a movement of more than 14 inches to secure operation. Each remote manual control for activation shall be located not more than 4 feet above the floor.

07.14 **Local Control Panel**

i. The local control panel shall be free standing, floor mounted type and shall be suitable for both auto and manual operation. The panel shall be naturally ventilated, totally enclosed, dust and vermin proof, with IP-67 enclosure as a minimum. The Clean Agent system shall be actuated automatically by the signal received from the fire alarm and detection panel. Fire alarm and detection panel, after detecting the fire in the protected area / zone, shall provide an actuating signal to Clean Agent control panel, which in turn shall energize the solenoid valve to trigger the operation in the respective protected area / zone. Necessary control / interlock cabling between Fire Alarm and Detection Panel and Clean Agent system panel, using flame retardant cable, shall be provided by the Clean Agent Vendor. The exact location of local control panel shall be decided during the detailed engineering.

ii. Boosting up provision shall be done by the Bidder to get adequate power supply/ current/ voltage required to operate the solenoid valve, LDP and other component of FDA system
iii. The local control panel shall be equipped with adequate rating battery charger and NiCd. battery with 24 hour back up, for efficient operation of the system during mains power failure.

© 2022 MECON Limited. All Rights Reserved

iv. Control panel shall be provided with all alarms, indicators, caution/sign board and relays/ control switches meeting all the requirements of NFPA-2001 and shall include but not be limited to the following:

a. Two alarms and one fault indicator lamp for each zone to be protected.
b. Combination of alarm silence and alarm off switch.
c. Combination of fault silence and trouble lamp switches.
d. Alarm test switch
e. Alarm re-set switch.
f. The system shall have a positive warning device by sounding alarm to alert personnel of the impending discharge and also a positive indication to show that the system has actuated.
g. Alarm indicating failure of devices /equipment shall be distinctive from alarm indicating operation in hazard.
h. All indication lamps shall be LED type with minimum size of 10 mm.

v. Warning and instruction signs at entrance to and inside protection areas shall be provided.

vi. A Control Box /Clean Agent Release Panel shall be provided for manual control at the exit doors of each risk area, comprising of selector switches for selection of Main/Reserve and Auto/Manual Push buttons for Clean Agent release.

vii. Potential free contacts shall be provided from the Clean Agent Control Panel to shut off the fire dampers / louvers and Air Conditioning System.

viii. Supervision of automatic systems shall be provided and shall include electrical supervision of the actuating device and the wiring connecting the actuation device and the detection system.

ix. Visual display shall be flashing type and hooter system of distinct tone capable of being heard in the range of 500m from the source.

x. Clean Agent extinguishing system shall incorporate a pre-discharge alarm with a time delay, sufficient to allow personnel evacuation prior to discharge. The delay shall be minimum 30 seconds. However it shall be adjustable from 30 to 120 seconds.

xi. Operating devices shall be by mechanical, electrical and pneumatic means conforming to NFPA2001. The power supply to electrical actuators shall be backed up with reliable battery supply. Such batteries shall be charged automatically by battery chargers. Power supply is taken from the Fire detection alarm system panels of the respective units. Required annunciation's such as "Gas released", "Failure of automatic actuation", "Gas release aborted" etc shall be exhibited in the fire alarm panel.Gasrealease panel shall be UL/FM/Vds approved.

xii. Where pilot cylinders are employed for actuation of the cylinder banks, the number of pilot cylinders shall be as per the listed design manual.

© 2022 MECON Limited. All Rights Reserved

xiii. All manual operating devices shall be identified to the hazard they protect.

xiv. Manual abort switches for each of the area / zone shall be as per NFPA 2001 or as specified by listing authorities.

xv. The gas releasing devices at cylinder outlets shall be of reusable type after discharge at any instant.

xvi. Supervision of automatic actuation devices, power supply, manual actuation circuits, and complete wiring shall be provided through control system I panel and the healthiness shall be reported or indicated in the panel automatically. Complete control system shall be listed and approved by UL/FMRC/VDS.

xvii. Bidder shall consider the digital type static weighing machine for one number of cylinders. However Bidder shall provide one trolley for each area.

07.15 **Inspection and Testing**

The complete system shall be tested to meet the approval of Purchaser. All equipments / devices shall be approved by UL/FM/ Vds.

Entire components of the system shall be UL/vds/Fm approved.

All equipments such of the system shall be UL listed and shall have approvals from UL. In order to determine that the system has been properly installed and will function as specified, the following minimum tests shall be performed:

i. A thorough visual inspection of the installed system and hazard area. The piping, operational equipment and discharge nozzles shall be inspected for proper size and location. The locations of alarms and manual emergency releases shall be confirmed. The hazard area shall be inspected closely for un-closable openings and sources of agent loss.

ii. The Bidder shall furnish the composition certificate of Clean Agent satisfying the requirements of the NFPA-2001.

iii. Filling certificate should be provided specifying from which original Clean Agent drum the gas has been taken and which cylinder is filled.

iv. A check of labelling of devices for proper designations and instructions. Name plate data on the storage cylinders shall adhere to specifications.

v. A test for mechanical tightness of the piping shall be conducted as per NFPA-2001.

vi. Storage containers shall meet the statutory requirement of approval / acceptance by, Chief controller of explosive, PESO , INDIA Nagpur.

vii. Design calculation shall be provided by the designer to Prove that the area is not pressurized and extinguishing capability is not affected due to provided ventilation of that area. Bidder to provide additional ventilation arrangement if required.

© 2022 MECON Limited. All Rights Reserved

viii. After installation, complete system shall be inspected and tested as per the recommendations of Chapter 4 & relevant Clauses of Appendix A of NFPA 2001. Wherever testing is mentioned at a regular frequency in these chapters, the Bidders shall carry out initial testing and records shall be presented to Owner for approval of the installation.

ix. Prior to handing over of the system to Owner, the supplier shall provide operational training to Owner's operating personnel which shall consist of control system operation, trouble procedures, emergency procedures, safety requirements etc.

x. The complete installation, testing, commissioning & training shall be carried out by the Bidder under the supervision of the Manufacturer/ designer at site.

xi. The performance test of the system shall be carried out by releasing the agent gas in a selected area and all the design parameters shall be measured. All equipments, refilling of gas after test, instruments etc shall be provided by the Bidder for the same.

xii. Test for fill density, weight, leakage etc shall be done if cylinders / containers are supplied in charged condition at site.

07.16 Safety

i. All the safety requirements recommended in NFPA2001 or as specified by listing authorities shall be incorporated in the installation by the Bidder.

ii. Appropriate digital warning signs/display shall be fixed outside of those areas protected by the system and also in areas where the gas may spread indicating clearly the hazard associated with the system such as Noise, turbulence, cold temperature, physiological effects on personnel etc.

iii. Apart from written warning signs, audiovisual type warning signs (i.e.) hooters & strobe lights shall be provided; for pre-discharge and post-discharge activity. The sounder shall have selectable tone options.

iv. The gas shall be discharged after a set time delay on receiving signal from the fire detection system. The duration of the timer shall be upto a range of 05 minutes settable (adjustable in I minute variation) at site after conducting test to find out the duration for evacuation of the personnel from the area.

v. To prevent the loss/release of gas automatically or manually during maintenance, the system shall have the facility of "LOCKOUT". The status of the system lockout condition shall be annunciated audio visually in the panel.

07.17 Materials of Construction

The material of construction shall be as per this specification for the items specified. For other items, the materials of construction used in the system shall be in accordance with NFPA- 2001 or as specified by the equipment manufacturer for the intended use

© 2022 MECON Limited. All Rights Reserved

(if the same is not specified in NFPA-2001). The material of construction shall be UL/FM/VDS/ approved. The approval of the same shall be submitted at the time of bid submission.

07.18 **Electrical**

Bidder to include power supplied and control interlocking. All wiring – junction boxes, push button station, indication lamps, hooters etc. shall be included into scope of Bidder. All areas shall have illuminated board "FIRE – EVACUATE, GAS WILL BE FLOODED". Each area shall have hooter adjacent to illuminated sign.

Main fire alarm panel shall have annunciation for fire in above areas and after confirmed signal (operation of two detectors) signal will be initiated for tripping of A/C system and visual indication 'START – FLOODING' shall be there. From main fire alarm panel signals shall also be initiated for illuminated sign / hooters of respective area.

Manual pushbutton of each area shall be located near exit and shall be break glass type with attached hammer. Manual push button shall operate valve for flooding in respective premises and as well as for connecting banks of gas cylinders to main pipe.

Bidder to develop logic for above and submit working scheme along with the tender. Any interface devices required to hook up this system with the main fire alarm panel shall be included by the Bidder as part of the scope as a whole.
One no. wall mounted annunciation board near cylinder bank shall be provided for (duplicate) annunciation to facilitate manual operation of valves.

07.19 **Gas Manifold**

Each cylinder in the bank shall be fitted with a discharge head, which shall be connected to a common manifold through high pressure connecting pipes of tubes. In case rigid pipes are used for the purpose anti-vibration coils shall be provided. Gas Manifold shall be also
UL/FM/VDS approved only.

All cylinders in the battery and the common manifold shall be mounted and suitably supported in a rack provided for the purpose. The rack shall be designed in such a manner that servicing and checking of individual cylinders shall be convenient and the cylinders are rigidly held in position. The design shall ensure no change / minimum possibility of accidental discharge of cylinders.

© 2022 MECON Limited. All Rights Reserved

08.0 GENERAL SPECIFICATION FOR MICROPROCESSOR BASED INTELLIGENT FIRE DETECTION AND ALARM SYSTEM

Details to be referred from Electrical Chapter

09.0 GENERAL SPECIFICATION FOR HYDRANT SYSTEM& FIRE WATER PUMP HOUSE

Details to be referred from Water/Fluid Chapter.

10.0 GENERAL SPECIFICATION FOR CIVIL WORK

Civil works pertaining to underground buried pipelines such as excavation, laying, backfilling, compacting, construction of valve chambers, manholes, laying of encasing pipes below roads shall also be in the scope of the bidder as a part of pipe laying/cable laying. In case group of existing or proposed pipes are crossing road, RCC culverts to be provided below the roads and the same are included in the scope of the bidder. Bidder has to protect the existing services line found in course of laying of pipeline.

All civil works for completeness of fire protection systems which may not have been described but required technically are included in contractor's scope. For detailed civil specification, please refer civil chapter.

11.0 ERECTION, TESTING, COMMISSIONING & PERFORMANCE GURANTEE

11.01 Erection / Installation of Plant & Equipment

(A) The erection of all plant and equipment shall be carried out according to the latest engineering practices and according to the working drawings, specification, instructions etc. duly approved by the Purchaser. The successful Bidder shall carry out the work in the presence and/or as per the instructions of site engineer/supervisory personnel deputed by the Purchaser. The erection shall be carried out by highly skilled workmen.

(B) The Tenderer shall supply all required manpower, tools and related equipment, all hoisting equipment, all necessary scaffoldings, all necessary transporting equipment, consumables. Construction and erection materials, petrol, diesel oil, Kerosene, solvents, sealing compound, tapes, brazing and soldering materials, welding and brazing gases, erection bolts, nuts and packing sheets/compounds, temporary supports,

© 2022 MECON Limited. All Rights Reserved

wooden blocks, spacers, templates, jute and cotton wastes, sand/emery paper etc. as required for the satisfactory completion of work.

(C) After erection, all equipment having moving part, subject to pressures or voltages shall be given trial operation. The trial operation shall consist of 24 hours of continuous operation. All modifications and rectifications required during the trial operation or required for proper operation shall be done at his own cost by the Tenderer as accepted by the Purchaser.

(D) The successful Bidder shall take care of positioning, levelling and plumbing of all pipelines and equipment as well as supporting structures within the required accuracy and tolerance limits. It shall be deemed as a contractual obligation that the lines are not thrown out of alignment or lifted off during commissioning and subsequent operation.

(E) There may be more than one contractor working in the area at the same time. As such, the work has to be carried out in proper co-ordination and consultation with the purchaser and all other parties concerned with the work. The Bidder shall take due notice of the working conditions, practices and agreements in vogue, in the area of the plant site and shall satisfy himself before quoting.

(F) The successful Bidder shall be responsible for paying strict attention to statutory regulations for prevention of accidents and to other safety rules. The regulations for prevention of accidents shall be deployed at appropriate places and should be distinctly visible to all personnel working in the area.

(G) The successful Bidder shall make his own arrangement for handling the equipment and pipelines at the stores and transporting it to the site of installation. In addition to the above, the contractor shall follow all the relevant erection clauses/conditions stated under various chapters in the tendering specification.

(H) Provision of special tools and tackles and necessary man power for construction, erection, operation and repair/maintenance of the plant and equipment.

(I) Adequate segmentation and interconnections shall be provided in the distribution networks to afford maximum flexibility of operation and maintenance.

(J) Rotating equipment shall be checked for proper direction of rotation and shaft alignment. Equipment subject to pressures shall be carefully examined for leakage. All equipment, such as pressure taps, temperature measurement connections, flow measurement devices etc. shall be provided by the Tenderer.

(K) On completion of the work, the Tenderer shall remove and dispose off all rubbish and other unsightly materials caused by his working to a distance of five kilometer from shop area or as directed by the Purchaser and thereby leaving the premises in good, clean, safe and operable condition.

(L) All the equipment shall be subject to stage inspection by the successful Tenderer's own inspecting authority. However, Purchaser's Inspector may visit the works from

© 2022 MECON Limited. All Rights Reserved

time to time that shall have free access to all the places of the manufacturing premises where any part/parts are under manufacturer.

(M) The successful Tenderer's inspecting authority shall keep a close surveillance in respect of the job for the design, dimensions, tolerances, surface finish etc.

(N) Before giving call for final inspection, all the documents shall be furnished to the Purchaser. The record of manufacturing details, inspection and tests carried out by the successful Tenderer shall be made available to the final Inspecting Authority. However, approval and final inspection at the manufacturing works shall not relieve the successful Tenderer of responsibility of replacing at his cost any defective part/material which may be detected by the purchaser during erection and commissioning or guarantee period.

(O) Inspection of the item will be carried out in line with the approved QAP of the Purchase Order.

(P) All materials required for fabrication, construction, testing and inspection shall be supplied by the Tenderer. No material shall be free issue to the Tenderer.

(Q) The test shall be conducted at shop for various sub-assemblies/ assemblies of equipment as per common industrial practices, unless otherwise specified. Extent of testing shall be finalized during formulation of detailed QAP.

(R) All inspection shall be carried out at the manufacturer's shop/works.

(S) No equipment or part item shall be dispatched without final inspection and issuance of inspection certificate.

(T) All equipment, assemblies, sub-assemblies shall be shop tested as per relevant standards and the test certificates shall be submitted by the supplier.

(U) Obtain necessary clearances from statutory authorities / state govt. / central govt. as required on behalf of the purchaser.

(V) All pipe work shall be erected in conformity with relevant codes.

(W) Unions or flanges shall be installed in all piping connections to equipment, valves, instruments, traps and miscellaneous specials to facilitate dismantling for maintenance.

(X) All supports to pipe work within the facility buildings may be taken from building structures such as ceiling, walls, trusses, etc with prior approval of purchaser. Any additional members such as cutting in walls or concrete structures for crossing the pipes etc as required, shall be provided by the successful Bidder.

(Y) The successful Bidder shall provide all required supports, anchors saddles, hangers, rollers, clamps, U bolts, spring supports etc. for aligning and supporting controlling the pipe work.

(Z) All underground pipelines crossing roads shall be protected by providing RCC Hume pipes. Hume pipes shall be so laid that a minimum of 1000 mm earth cushion over the top of Hume pipe is available. The Hume pipes shall also extend 1000mm from the edge of the road berm on either side.

© 2022 MECON Limited. All Rights Reserved

(AA) The Bidder shall study the specification & satisfy himself thoroughly regarding the workability of the plant, equipment & system offered & also take full responsibility for the guaranteed operation & performance of the same as well as for their smooth, safe & reliable working.

(BB) The Bidder shall guarantee the integrated operation of the system & equipment covered in his scope as a whole including inter faces required to be established with other related system.

(CC) Should the tests specified show that the equipment has failed to achieve the guaranteed parameters, the supplier shall carry out necessary modification or part replacements to achieve the guaranteed parameters & successful demonstration, the tests shall be repeated without any extra cost to the purchaser.

(DD) The Bidder shall submit quality assurance plan (QAP) for each and every individual equipment as well as for complete system.

(EE) Erection, testing & commissioning of various equipments and piping etc shall be done also inline with details given in various equipment supplier.

(FF) If the equipment and pressure parts thereof are found to be defective at site during site inspection even after inspection at the manufacturer's works and dispatch clearance duly issued, the manufacturer shall still bear the sole responsibility of replacing all defective parts /equipment without any additional financial implementation on PURCHASER.

(GG) The pipe lines after erection and laying with fittings shall be tested for a minimum holding time of 60 minutes with minimum hydrostatic pressure of 10 Kg/cm2 or 1.5 times the working pressure whichever is higher.

(HH) The Tenderer shall arrange at his own expenses all equipment, materials consumables etc for conducting the hydrostatic tests/leakage tests etc

(II) For all the equipment, hydrostatic test shall be carried out at 1.5 times the design pressure and maintaining the test pressure for a minimum of 60 minutes.

(JJ) Pipelines shall be subjected to hydraulic tests before painting. Equipment shall be disconnected before the test. Combined tests of the equipment with the pipelines are not allowed.

(KK) Hydraulic test pressure shall be maintained for a duration, which shall be mutually decided and then, decreased to working pressure. At this pressure all the pipelines shall be inspected and all the welded joints shall be tapped by 1.5-Kg hammer.

(LL) Hydraulic test result shall be considered satisfactory if during test, manometric pressure does not decrease and no leakage or mist is found in the joints, fittings etc.

(MM) Defective spots found in the welded joints must be cut out and re-welded. Chaulking shall not be allowed for repairing leaky spots in welded joints. In case of other joints, the joint shall be dismantled and fresh joining shall be done.

(NN) After eliminating all defects, hydraulic test shall be repeated.

© 2022 MECON Limited. All Rights Reserved

(OO) All pipelines shall be flushed/purged till all dirt, scales and foreign materials are removed immediately prior to the commissioning. The minimum purging time shall be of 30 minutes. During flushing, valves and pipelines' accessories such as fittings shall be isolated and bypassed, where required.

(PP) Flushing operation is to be continued till clear water comes out from the system.

(QQ) The plant and equipment shall be considered commissioned only after successful operation on load. After the successful commissioning, the equipment shall be offered by Tenderer for performance guarantee trials.

(RR) Within seven days of receiving the notice, the Tenderer shall replace/repair, at his own cost, any defective parts in the equipment of his own manufacture or those of his sub contractors, under normal use and arising from faulty design, material and/ or workmanship. Such replaced defective parts shall be returned at site to the Tenderer unless other wise arranged.

(A) Erection of Steel Structure

The scope of work under erection includes in addition to provision of erection and transport equipments, tools and tackles, consumables, materials, labour and supervision, the following:

1) Storing and stacking at site of erection of all fabricated structural components/ units/assemblies till the time of erection.
2) Transportation of structures at site.
3) Receiving at site of structures including site handling /movement, unloading, storing and stacking at site of erection of technological structures such as bunkers and the related structures
4) All minor rectification / modification such as :
   - Removal of bends, kinks, twists, etc. for parts damaged during transportation and handling;
   - Cutting chipping, filing, grinding, etc., if required, for preparation and finishing of site connections;
   - Reaming for use of next higher size bolt for holes which do not register or which are damaged.
   - Welding of connections in place of bolting for which holes are either not drilled at all or wrongly drilled during fabrication.
5) Other rectification work such as
   - Re-fabrication of parts, damaged beyond repair during transportation and handling or incorrectly fabricated.
   - Fabrication of parts omitted during fabrication by oversight or subsequently found necessary.

© 2022 MECON Limited. All Rights Reserved

- Plug-welding and re-drilling of holes which do not register and which cannot be reamed for use of next higher size bolt.

6) Fabrication of minor items/missing items or such important items as directed by the Owner / Consultant.
7) Assembly at site of steel structural components wherever required including temporary supports and staging.
8) Making arrangements for and providing all facilities for conducting ultrasonic X-ray or gamma ray tests on welds; getting the tests conducted by reputed testing laboratories, making available test films/ graphs, reports and interpretation.
9) Rectifying at site, damaged portions of shop primer by cleaning and touch-up paint.
10) Erection of structures including making connections by bolts/high strength friction grip bolts / welding.
11) Alignment of all structures true to line, level plumb and dimensions within specified limits of tolerances as per IS :12843 "Tolerance for Erection of Steel Structures".
12) Application of second coat of primer paint and two coats of finishing paint at site after erection.
13) Grouting of all column bases after proper alignment of columns and only after obtaining clearance from Owner / Consultant.
14) Conducting preliminary acceptance and final acceptance tests.
15) Preparation of as built drawings, preparing of sketches/drawings to suit field engineering decisions, availability of material, convenience of fabrication, transportation and erection and changes during fabrication and erection.

All such works are subject to approval by the Owner / Consultant.

(B) Wrapping/coating of underground pipelines

Mechanical cleaning and anticorrosive protection of underground MS pipelines shall conform to IS: 15337 (Latest). The anticorrosive protection of pipelines shall be provided and tested as per the procedure given in the IS: 15337 (Latest).

The thickness of tapes shall be 3 mm upto pipe diameter DN 300 mm and 4 mm for pipe diameter of DN 350 mm & above.

(C) Training

© 2022 MECON Limited. All Rights Reserved

The Bidder shall give detailed training program mutually agreed as per requirement well in advance prior to the commencement of training. The Bidder shall supply all training materials, instructions & other connected literature in six copies to the purchaser in English language. In addition each trainee shall also receive a copy of the same.

11.01.1 Painting

All Plant, equipment, valves, piping etc. shall be painted as per requirement and approval of Purchaser.

1. Painting with surface preparation shall be provided to protect outside surface of all carbon steel which are subject to atmospheric action. Painting shall provide a continuous adherent film of adequate thickness on the surface being treated and protect it from attack due to continuous exposure in tropical atmosphere prevailing at the site.

2. The complete paint system for any item shall include
   a. Surface preparation of steel substrate,
   b. Application of primer coats, intermediate coats and finish coats of specified paints of approved quality.

3. Surface Preparation
   a. Surface preparation, being a pre-requisite for any paint application, shall be such as to clean the surface thoroughly of any materials which may be conducive to premature failure of the paint substrate.
   b. All surfaces shall be cleaned of loose substances and foreign materials, such as dirt, rust, scale, oil, grease, welding flux, etc. in order that the prime coat is rigidly anchored to the virgin metal surface. The surface preparation shall be as per Swedish Standard SIS 055900 or German Standard DIN 55928 (Part 4) or BS 4232 or IS 1477 (Part I). Procedures for surface preparation shall cover solvent cleaning, hand tool cleaning, power tool cleaning and sand blast cleaning or combination thereof in order to attain desired surface quality as required by the specific primer paint.

4. Surface shall be prepared to achieve grade Sa 2 1/2 of SIS Standard by sand blasting. After surface preparation, equipment shall be painted with
   a. Two coats of two-pack air drying epoxy polyamide resin based red oxide zinc phosphate primer as per IS 2074 : 1992.

© 2022 MECON Limited. All Rights Reserved

b. One coat of two-pack air drying high-build epoxy resin based intermediate paint with micaceous iron oxide (MIO).
c. Two coats of two-pack air drying epoxy polyamide enamel paint suitably pigmented.

Dry film thickness (DFT) of each coat of primer, intermediate and finish paints shall be 30, 100 and 40 microns respectively.

5. Paint Application
   a. Paint shall be applied in accordance with manufacturer's recommendations as supplemented by this specification. The work shall generally be carried out as per IS 1477 (Part II).
   b. Paint shall not be applied in rain, wind, fog or at relative humidity of 80% and above or when the surface temperature is below dew point resulting in condensation of moisture. Paint shall generally not be applied when the ambient temperature is 50 C and below.
   c. Each coat of paint shall be continuous, free of pores and of even film thickness without thin spots.
   d. Each coat of paint shall be allowed to dry sufficiently before application of the next coat to avoid damage such as lifting or loss of adhesion.

6. Colour Code
   Shades of finish coat to be applied shall be as per IS 5 and of wide acceptability in water supply works. Prior approval shall be taken from the Purchaser after placement of order before adopting final colour shade for any particular item being painted.

All yard piping, internal piping, fittings shall be painted with approved paints. Supply of paints is in the bidder's scope.

Painting operation shall generally be in line with IS 1477 and color of finish paint shall be fire red shade no. 536 of IS 5 and the thickness required is 150 microns DFT of total with epoxy mastic prime and epoxy PU coating.

Painting Schemes

For a complete painting scheme of any item being printed, all types of paints are to be procured from the same manufacturer as approved by the purchaser.

© 2022 MECON Limited. All Rights Reserved

Primer Paint-P1 (Phenolic – Alkyd Based): A single pack ai r drying phenolic modified alkyd composition with zinc phosphate as a primer paint conforming generally to IS: 2074.

Table 10: Painting Scheme for Primer Paint-P1

Air drying time	1. About 60 minutes (touch dry) 2. Overnight (hard dry)
Dry film thickness (DFT)/Coat	40 microns (min)
Temperature resistance	Up to 100^0C dry heat

Intermediate Paints-I1 (Phenolic alkyd based): A single pack high build phenolic based paint with micaceous iron oxide (M10).

Table 11: Painting Scheme for Intermediate Paints-I1

Air drying time	4 to 6hours (touch dry) 2 days (hard dry)
Dry film thickness (DFT)/Coat	75 microns (min)
Temperature resistance	Up to 100^0C dry heat

Finish Paints-F1: A single pack ai r drying high gloss phenolic alkyd modified synthetic enamel paint suitably pigmented

Table 12: Painting Scheme for Finish Paints-F1

Air drying time	3 to 4 hours (touch dry) 24 hours (hard dry)
Dry film thickness (DFT)/Coat	25 microns (min)
Temperature resistance	Up to 100^0C dry heat

The painting scheme to be followed for various structure/equipment exposed to different condition is briefly given hereunder for guidance to the bidder.

Table 13: Painting scheme to be followed

S.N.	Description	Painting Scheme	Total DFT
A.	Pipes, Pipe Fittings & Fire Fighting Equipment		

© 2022 MECON Limited. All Rights Reserved

	Primer Paint (Phenolic – Alkyd Based)		
1.	Indoor	2 Coat P1 + 1 Coat I1 + 2 Coat F1	140
2.	Outdoor	2 Coat P1 + 1 Coat I1 + 2 Coat F1	205
3.	Steel Structure	2 Coat P1 + 2 Coat F1	

Note: Fire-fighting equipment Signal red 537 shall be provided.

11.01.2 Packing And Delivery

a. The Tenderer shall provide for secured packing of all equipment to protect from damage during transit from point of manufacture up to the site of erection under conditions which may involve multiple handling, storage and exposure to heat, moisture, rains, etc. The Tenderer shall refer to the guidelines in this regard as enshrined in GCC.
b. All equipment and parts shall be tagged with reference to the assembly drawings and corresponding part numbers before packing and dispatch.
c. All openings in valves, pipes and other materials shall be protected by suitable covers or plugs.
d. All packages shall be clearly and properly marked in English language with indelible paint by stenciling. The identification marks indicating the name and address of the consignee shall be clearly marked on two sides and top of each package. Gross and net weights, outer dimensions and volumetric measurements shall be included in the marking. Eye bolts, lifting hooks or brackets shall be provided for lifting the boxes, crates and packages.
e. Every crate or package shall contain a packing list in a waterproof envelope. A duplicate copy of the packing list shall be sent by post to the Employer. All items of equipment shall be clearly marked for identification against the packing list.
f. Cases containing rubber rings, bolts and other small items shall not normally weigh more than 50 kg gross per case.
g. Electrical equipment shall be enclosed in sealed air-tight package with hygroscopic material, before being placed in packing cases on shock absorbent materials and secured by means of battens.
h. The Tenderer shall be responsible for checking all the materials delivered to the site and shall keep the Employer fully informed of the state of deliveries. The Tenderer shall carry out proper unloading, preservation, maintenance, storage and security of materials delivered to the site.

© 2022 MECON Limited. All Rights Reserved

i. The Tenderer shall erect and maintain on the site any temporary storage facility as required and approved by the Purchaser.
All Plant, equipment, valves, piping etc. shall be painted as per requirement and approval of Purchaser under this pkg.

j. All equipment shall be securely packed in adequately strong boxes so as to protect the equipment during transit from your works to site, under conditions which may involve multiple handling, shipment by rail and road, loading and unloading, storage, exposure to rain, heat and moisture and possible pilferage etc.

k. All equipment and parts shall be tagged with reference to the assembly drawings and corresponding part numbers before packing and dispatch.

l. All openings of pipes, valves and fitting shall be protected by suitable covers or plugs.

11.02 Testing, Commissioning & Performance Guarantee

01 Testing: Testing and inspection of equipment, pipes and materials shall be carried out at the works of the Tenderer or his sub-Tenderer during manufacturing and on final product to ensure conformity of the same with acceptable criteria of Technical Specifications, approved drawings, authenticated manufacturing drawings and reference Indian/ International standards.

02 The Tenderer shall furnish Quality Assurance Plan (QAP) for each equipment and material for Employer's/Consultant's approval at least two months prior to start of manufacturing.

All tests and inspection of the installation shall be done in conformity with the functional requirement of the system. The successful Bidder shall furnish a detailed testing and commissioning procedure for all the systems for approval by the purchaser. As soon as a given facility or a portion thereof is completed and ready to energize and start-up, the purchaser may test run and operate it without relieving the Bidder of his responsibility or guarantee.

Tests to be conducted at the shop for various assemblies/sub-assemblies of equipment shall include, but not be limited to the following:

1. Material test.
2. Tests during manufacture/fabrication.
3. Dimensional checking.
4. Hydraulic test at the shop.
5. Static/dynamic balancing test for all moving parts.
6. Performance test.

© 2022 MECON Limited. All Rights Reserved

7. Any other test as required to prove the functional requirement of various parts of equipment/system.

Valve Tests

1. During testing there shall be no visible evidence of structural damage to any of the valve components.
2. Motorized valves shall be tested with their actuators, with a differential head equivalent to their maximum working pressure, to demonstrate that the actuators are capable of opening and closing the valves under maximum unbalanced head condition within the specified opening or closing speed.
3. All tests shall be carried out as per applicable Indian/reputed International Standard Codes.
4. The following tests shall be carried out for butterfly valves
   - Seat leakage test at rated pressure.
   - Body hydrostatictests 1.5 times the rate pressure.
   - Disc strength test at body test pressure.
   - Valve operation with and without actuator.
5. The following tests shall be carried out for sluice valves
   - Seat leakage test at rated pressure.
   - Body hydrostatictests 1.5 times the rate pressure.
   - Valve operation.
6. The following tests shall be carried out for non-return valves
   - Seat leakage test at rated pressure.
   - Body hydrostatictests 1.5 times the rate pressure.
   - Valve operation.

Sluice Gate Tests

1. Seat Clearance Check
   With the gate fully closed, the clearance between seating faces when checked with the thickness gauge, shall not exceed 0.1 mm.
2. Movement Tests
   Each gate shall be shop operated three times from the fully open position to the fully closed position and return to fully open status, under no flow conditions, to demonstrate that the assembly is workable.
3. Leakage Tests
   With the gate in closed position, design pressure shall be applied for a period of not less than 5 minutes to the unseating side of the sluice gate and the leakage shall not exceed the maximum leakage permissible as per IS :13349.

© 2022 MECON Limited. All Rights Reserved

4. Hydrostatic Test
   A differential of one and a half times the design pressure shall be applied to the unseating side of the gate. Under these conditions, no part of the gate shall show any deflection or deformation.

Pipe Tests

Various tests to be carried out by the manufacturer to ensure high quality product shall include, but not be limited to the following:

- Visual inspection.
- Dimensional check.
- Chemical analysis
- Non-destructive tests
- Mechanical properties tests.
- Hydrostatic test.

Plate and skelp to be used for manufacture of pipes shall be visually inspected for any surface defects. All pipes shall be visually examined and shall be free of defects in the finished conditions.

Dimensional check shall be made for outside diameter, wall thickness, length, weight, straightness, out-of-roundness, bevel angle, bead height, etc. The accuracy of all measuring instruments used for acceptance or rejection shall be verified at least every operating shift.

- The pipes shall be substantially rounded. The difference between maximum and minimum inside diameters at any cross section shall not exceed 1% of the nominal diameter of the cross section under consideration subject to a maximum of 10mm.
- Tolerances on outside diameter, wall thickness and straightness shall be in line with the provisions of IS: 3589.
- Pipe ends shall be beveled as per IS: 3589.

The manufacturer shall furnish the result of chemical analysis and a mechanical properties test of the pipe material demonstrating conformance with specified limits in IS 3589:1991.

Non-destructive Tests: 15% of the weld seams of the pipes fabricated from mild steel plates shall be subjected to ultrasonic tests for cracks, lack of complete penetration or complete fusion and discontinuities. In addition, the skelp end weld in finished spiral welded pipe shall also be inspected.

© 2022 MECON Limited. All Rights Reserved

Hydrostatic Tests

- Each length of the pipe shall withstand, without leakage, hydrostatic test pressure. The test procedure, pressure and duration of test shall be as per the applicable standard code.
- In order to ensure that every length of pipe is tested to the required test pressure, each tester shall be equipped with a recording gauge that will record the test pressure and the duration of time the pressure is applied to each length of pipe, or shall be equipped with some positive and automatic interlocking device to prevent the pipe being classified as tested until the test requirements (pressure and time) have been complied with. Such records or charts shall be available for examination at the manufacturer" works by the Employer" inspectors.
- Pipelines for liquid services after erection shall be hydraulically tested by water at 1.5 times the provided pump pressure as per stipulation of drawings. For carrying out hydraulic tests, the erection Tenderer shall arrange testing equipment like tanks, pumps, temporary pipes, valves at his cost.
- Pipelines shall be kept pressurized until the entire section under test has been examined for leakage. However, minimum duration for keeping pipes under hydrostatic pressure shall not be less than 2 hours. Defects revealed by the tests shall be repaired or defective parts replaced and the system shall be retested. Welded joints shall be subjected to hand hammer test while under test pressure.
- The pipeline or section thereof under testing shall be slowly filled and the test pressure measured at the lowest point of elevation shall be applied by means of pump. The duration of each pressure test shall be not less than two hours and shall be as per the relevant standards. During the test period there shall be no drop in pressure in case of hydraulic tests and maximum of 1 per cent pressure drop in case of pneumatic tests for air lines and gas lines after temperature corrections.
- While a line is under pressure all visible leaks shall be prevented by tightening wherever possible. Other type of defective joints shall be cut and replaced. Any cracked or defective pipe, fitting, valve etc. shall be removed and replaced by Tenderer with sound material and the test shall be repeated until the results are satisfactory. Defective welds shall be repaired by removing the defective piece of pipe which caused the leak and re-welding. No weld leaks shall be repaired by mechanical caulking.
- The Tenderer shall arrange pumps, barrels, tanks, bulkheads, blanks, connections, test gauges and all other equipment necessary for pressure testing. Compressed air shall be arranged by the Tenderer through portable air compressors. The Tenderer shall furnish, install and dismantle all temporary lines to the system under test.

© 2022 MECON Limited. All Rights Reserved

- The Tenderer shall conduct all tests and keep proper records of all test, duly certified by the Engineer. Values of line pressure and temperature as well as ambient conditions shall be taken at each 'reading'. The intervals between the successive readings shall be 30 minutes unless otherwise directed by the site engineers of the purchaser's representative. Tested pressure gauges, temperature indicators etc. shall be used in duplicate for tests.
- The Tenderer shall arrange water for testing of all equipment and accessories of water piping system before installation.

For each of the items being manufactured / supplied, the following test certificates and documents, as applicable, in requisite copies including original shall be submitted to the Inspection Agency. All test certificates shall be endorsed by the manufacturer and the Tenderer with linkage to the project, purchase order and acceptance criteria.

- Raw materials identification and physical and chemical test certificates for all materials used in manufacture of the equipment/pipe.
- Welding procedures and welder's qualification test Certificates, as per applicable code.
- Static/dynamic balancing certificate for rotating components/ machines.
- Pressure test certificates.
- Performance tests certificates for all characteristics.

Inspection at manufacturers' works shall not relieve the Tenderer of responsibility for replacing at his own cost any defective part/material and repairing equipment for defective workmanship that may be discovered at site at a later date.

Preliminary acceptance test for erected pipelines shall be carried out as follows:

- Checking of pipelines as per manufacturer's certificate / approved drawings.
- Visual examination of welds.
- Dimensional checks as per the approved erection drawings.
- Checking of welded joints by chalk and kerosene test.

03 Start-up: Contractor shall provide the services of all technicians, erection and start-up engineers necessary to make the complete installation of Spray System, Foam System, etc. into operation.

04 Commissioning: The Bidder shall be responsible for the integrated commissioning of the plant & equipment supplied by him including cold trials, commissioning and demonstration of performance guarantee test including flood testing of the spray

© 2022 MECON Limited. All Rights Reserved

system, foam system, etc. which includes covering of all facility equipments, conducting the flood test after getting necessary facility clearances, dewatering the flooded areas and de-covering the covered facility equipments and bringing back the Spray System, Foam System etc. to the commissioned condition to the satisfactory acceptance of the purchaser. After liquidation of all the defects and after fulfilling all the provision of Contract, employer shall issue Preliminary Acceptance Certificate (PAC) for the subsequent commissioning of facilities.

05 Performance Guarantee: The performance guarantee tests shall be completed within a time schedule to be mutually agreed to between the Purchaser and the successful Bidder. Details of the performance tests, test procedures and test schedules for the demonstration of the performance guarantee based on BIS, OISD, NFPA & TAC Regulations shall be submitted to the Purchaser and shall be mutually agreed upon.
The successful Bidder shall conduct the operation during the performance tests and shall take full responsibility of the operations.

If for reasons for which the successful Bidder is responsible and unable to achieve the performance values as a whole or in part during the performance tests, the successful Bidder shall repeat the tests for demonstrating the performance values. Before repeating the tests, the successful Bidder shall take any and all measures as may be needed, at his own cost in order that the performance values can be achieved.

The observations of each performance test shall be recorded and signed by the Purchaser and the successful Bidder. If such data conform to the performance test values, the successful Bidder shall be entitled for the "Final Acceptance Certificate" from the Purchaser.

If even with two repetitive tests and if necessary, by using additional operating personnel from the successful Bidder's crew and at his own expenses, the performance values are not reached for reasons within, Successful Bidder shall undertake at his own cost such modification or replacement as are considered necessary to obtain the performance guarantee values and the responsibility to demonstrate successful performance guarantee shall continue to remain with the successful Bidder till so established.

06 Portable Extinguishers

a) Test certificates shall be provided for the first fill of all the extinguishers.
b) The material used and equipment supplied shall be new and the best of their respective kinds and shall comply with the latest revisions of all relevant Indian Standard Specification.

© 2022 MECON Limited. All Rights Reserved

c) All the equipment shall be provided with test certificates. A certificate shall be produced from Chief Inspector of Explosives in case of Carbon dioxide extinguishers.
d) The coloring and instructions on the extinguishers shall be as per relevant Indian Standard.
e) All the equipment shall be so packed as to avoid any damage to equipment finished surfaces during transit.

07 All equipment shall be guaranteed for workmanship and performance for a period of one year from the date of final takeover of the complete fire protection system.

12.0 DRAWINGS AND DOCUMENTS

Drawings and documents are to be submitted by the bidder for all the systems as indicated below:

12.01 Documents to be furnished alongwith the bid

A. Fire Protection Systems

i. Details of Clean Agent Systems offered
ii. UL/FM/LPCB/VdS listing number of original supplier's design software for Clean Agent.
iii. Indian/International standards to which the offered system/equipment conform.
iv. Tenderer to submit a certificate from the original supplier and designer that he is their authorized supplier in India.
v. If the Tenderer is collaborating with any foreign party for basic engineering, design etc., he should provide certificate of collaboration.
vi. Name of the Clean Agent i.e.: IG 541/ IG 55 provided shall be clearly mentioned along with system pressure offered.

12.02 Documents to be furnished by the successful tenderer

(A) For Approval

a. P&ID drawings for Spray System(s),
b. P&ID drawings for Foam System(s),
c. P&ID drawings for Clean Agent System(s),
d. Piping Layout drawings including plan, elevation, isometric, nodal diagram, hydraulic calculation for Spray System(s),

© 2022 MECON Limited. All Rights Reserved

e. Piping Layout drawings including plan, elevation, isometric, nodal diagram, hydraulic calculation for Foam System(s),
f. Piping Layout drawings including plan, elevation, isometric, nodal diagram, pressure calculation for Clean Agent System(s),
g. Design philosophy highlighting operation of system, design parameters, premises covered, gas quantity calculations, list of major equipment.
h. System design including computerized system flow calculations, piping and storage layout using approved listed software (UL/FM/LPCB/VdS) for Clean Agent. Hydraulic calculation for each risk area shall be submitted.
i. Flow calculations for piping network
j. P&ID and GA Drawing for the system, piping layout along with Isometric drawings.
k. Detailed Water requirement,
l. Portable fire extinguishers – Distribution of extinguishers w.r.t. type and capacity as per IS: 2190.
m. Quality Assurance Plan (QAP) in MECON's Format.
n. Other drawings and documents which are not mentioned above but required for completeness of fire protection system are to be submitted for approval.
o. GA and cross-sectional drawings showing all dimensions and materials of construction of various components of fire extinguishers.
p. Distribution of extinguishers with respect to their type, capacity and numbers in various premises will be decided in accordance with IS – 2190 (Latest). A drawing/table showing such distribution shall be submitted.

(B) <u>For Reference/Information</u>

a. Catalogues / Brochures giving technical particulars and details of operation / maintenance of the offered equipment / system.
b. Certificates of agencies who have accorded approval for the components/ equipment offered.
c. Mounting / fixing details of all the equipment / systems/ supports.
d. Civil drawing with complete detail of cylinder storage room
e. Testing and inspection schedule and procedure.
f. Details of cylinder holding rack.
g. Cylinder and other equipment data sheets required for the total flooding system.
h. Details of weighing system.
i. Battery sizing calculations.
j. GA and schematic designs of Control Panel.
k. Functional write up of control panel including battery charger.
l. Operating and maintenance manual.

© 2022 MECON Limited. All Rights Reserved

m. Protected room/area layouts as reconfirmation regarding the area being provided with Clean Agent system.
n. Indicating the space requirement for main and standby cylinders.
o. Numbers & placement/ Area coverage for type of nozzles used.
p. Quantity of Clean Agent offered for various areas as per specifications.
q. Availability of gas, spare parts, refilling facilities in India.
r. List of Mandatory and Recommended spares.
s. Manufacturer's routine test and type test certificate for all equipment and cables,
t. Ordering specifications to sub-contractors,
u. Instruction manuals for erection, maintenance and operation of all the equipment,
v. Specification of equipment/material along with their makes/catalogues. Approval certificate from authorizing bodies for various components of the systems.
w. Technical datasheets for all equipment
x. Datasheets of fire extinguishers.

12.03 **"As Built" drawings/documents to be furnished by the successful tenderer**

The contractor shall submit following "As Built" drawings/documents

1. All approved drawings/documents,
2. All test charts and inspection certificates in bound volume,
3. CAD version of drawings.

© 2022 MECON Limited. All Rights Reserved

UTKARSHA ALUMINIUM DHATU NIGAM LIMITED

ESTABLISHING FACILITY FOR ALUMINIUM ALLOY MELTING, SLAB CASTING AND FLAT ROLLED PRODUCTS PRODUCTION FACILITY

GENERAL TECHNICAL SPECIFICATION FOR MATERIAL HANDLING EQUIPMENT (GS – 13)

MECON LIMITED
RANCHI - 834002

No. MEC/S/11/35/Q7R6/GTS/01/R0 **JUNE' 2022**

CONTENT LIST OF GS – 13

Chapter No.	Description	Page No
01	FOUR /DOUBLE GIRDER EOT & GANTRY CRANE	2-38
02	SINGLE GIRDER EOT/UNDER SLUNG CRANE, CANTILEVER & JIB CRANE	39-52
03	ELECTRIC HOIST	53-61
04	HAND OPERATED TRAVELLING CRANE	62-67
05	MANUAL HOIST	68-71
06	ELEVATOR	72-84
07	ELECTRIC WINCH	85-91
08	TRANSFER CAR	92-100

© 2022 MECON Limited All rights reserved

01. FOUR /DOUBLE GIRDER EOT & GANTRY CRANE

SCOPE OF WORK

The scope of work of the Tenderer shall consist of design, manufacture, fabrication, procurement, inspection, shop testing, assembly, painting, supply and transportation to site, unloading and storage of consignment at site and re-conservation, erection, testing & commissioning of Four Girder /Double Girder EOT & Gantry/Semi Gantry cranes complete with their electrical equipment and standard accessories with attachments as per agreed technical parameters.

The scope of work of the Bidders shall also include the following:

i. Supply of DSL system along with fixing brackets and accessories for power supply to the crane.

ii. Supply of handling attachment as per requirement.

iii. Supply of commissioning spares.

The Bidder shall include in his tender and provide with each equipment minimum commissioning spares for proper erection and commissioning of the equipment until final acceptance following demonstration of performance guarantee. The Bidder shall furnish the list of commissioning spares recommended by them for Purchaser's/ Consultant's review. Moreover, list of commissioning spares shall be finalized after discussion with successful bidder. Any additional spares (apart from finalized list) required for successful commissioning of equipment shall be supplied by successful bidder free of cost.

iv. Supply of spares (Mechanical & Electrical) for two (2) years normal operation & maintenance of cranes.

Scope of work of bidder shall also include supply of 2 years essential spares for each crane. The Bidder shall furnish consolidated list of essential spares for 2 years of normal operation for each crane with item wise price. The list shall be finalized after discussions between Purchaser & Bidder.

v. Supply of required quantity of initial fill of lubricants, hydraulic fluid, cleaning/ flushing fluid including replenishment during commissioning and other consumables necessary for erection, testing and commissioning of the cranes.

vi. Supply of necessary tools and tackles required for maintenance or testing/inspection.

© 2022 MECON Limited All rights reserved

- The Bidder shall furnish list of maintenance tools and tackles required for maintenance of each crane along with the tender. List of maintenance tools and tackles shall be finalized after discussion with the bidder

vii. Supply of required quantity of paints for intermediate, final coat and retouching.

viii. Supply of drawings and documents as per clause

ix. PDB if required, requisite number of floor mounted isolating switches/ circuit breakers with enclosure for power supply to DSL in each bay, requisite number of bay isolators/ sectionalisers (with enclosure) for repair & maintenance bays, for DSL sections etc.

x. All interconnecting cables from outgoing of each isolating switch onwards upto DSL & crane panels thereafter and other devices, anti-collision devices (to be supplied by the successful tenderer), signal lamps etc. Looping cables required for minimizing voltage drop within limits shall be also within scope of supply of successful Bidder.

xi. All requisite cable trays & cable erection materials such as clamps, saddles etc. for laying & routing of all cables.

xii. All cable termination materials such as sockets, glands, lugs etc. to enable dressing & termination of all cables

xiii. All earthing materials & accessories as required for earthing of crane equipment & DSL system including connection upto Purchaser's earth grid.

xiv. Optical type/Infra red type (radar base) Anti-collision devices wherever required.

xv. Supply of maintenance free Ni-Cd Battery backup system for minimum 30 minutes rating for all magnet crane.

xvi. Supply & installation of load weighing device wherever required (for main hoist) complete with all accessories including wireless data transmission system for interfacing with Plant PLC.

xvii. Supply and installation of CBMS (Condition Based Monitoring System) for Main Hoist gearbox of Hot Metal Handling Crane (if agreed between the Bidder & Purchaser/Consultant. The same shall be installed on the crane form operator’s cabin to shift control room.

xviii. Supply, erection, testing and commissioning of adequate capacity **Repair Trolleys/ Electric Wire Rope Hoists** for crane maintenance complete with their electrical equipment and standard accessories.

The scope of work shall stand supplemented by stipulations mentioned elsewhere in the GTS.

© 2022 MECON Limited All rights reserved

TECHNICAL SPECIFICATION

1) **General**

i. The cranes shall be designed, manufactured and tested in accordance with the latest revision of IS: 3177, 807, IPSS and other national/ international codes wherever applicable.

ii. The crane components shall be standardized to keep the number of spares to the minimum.

iii. All parts requiring replacement or inspection or lubrication shall be easily accessible without the need of dismantling of other equipment or structures. All electrical cables shall be so laid that they are not liable to be damaged and can be easily inspected and maintained.

iv. All components for cranes of identical capacity and duty shall be interchangeable. Cranes of the same capacity and duty shall be identical in all respect unless otherwise required.

v. No cast iron parts shall be used except for electrical equipment and no wood or other combustible material shall be used unless specifically mentioned otherwise. Deviations, if any, to this clause shall be permitted only with the specific approval of the Purchaser.

vi. All machinery or equipment included under this specification must be equipped with safety devices and clearances to comply with recognized standards and Purchaser's requirements along with safety codes and statutes prevalent at the place of installation of the equipment.

vii. For welded construction such as that of bridge girders, end-carriages, rope drums, gear-boxes etc. The material used shall be steel Grade E250 (Fe 410W) of 'B' quality to IS: 2062-2006.

For welding these members low hydrogen electrodes as per IS : 814-2004 grade EB-5426-H1JX shall be used. Automatic/ Semi Automatic, Submerged Arc/Gas shielding shall be carried out according to IS or other International Specification.

Electrodes and wire flux combination used for fabrication should be from reputed makes of ESAB, Advani Orlikon, Phillips and Modi.

Welding shall be performed in an approved and professional manner. All welds shall be homogenous and show physical properties similar to those of parent metal. Finished

© 2022 MECON Limited All rights reserved

welds shall be perfectly free from all defects such as porosity, burnt metal, inclusion etc. and shall present a smooth appearance.

viii. All wheels, couplings, open gears etc. shall be provided with covers, opening on strong hinges. All heavy covers shall be provided with inspection windows.

ix. Where down shop leads are located below runway rails, guards shall be provided on the crane to prevent the hoist ropes from coming in contact with down shop leads.

x. All bolts except those with nyloc nuts shall be provided with grip lock nuts or spring washers.

xi. For outdoor cranes all electrical and mechanical equipment which are exposed to weather shall be completely covered or made weather proof. The covers shall be segmental to facilitate easy dismantling and assembly.

xii. Fasteners for pedestal blocks, motors, gear-boxes etc. shall be easily removable from the top. Studs or body bound bolts shall not be used as fasteners for mechanical items except for fixing cover.

xiii. Power & control cables shall be clamped in groups separately. All trailing cables shall be clamped with PVC or non metallic clamps. Group derating factor shall be appropriately taken according to the recommendations of the cable manufacturers based on the method of laying and number of cables being laid together.

xiv. Guards of approved design, which will push forward any object placed across the track, shall be attached to each end of the end carriages.

xv. Parts of steel frames carrying machinery shall be provided with doubling plates of adequate thickness, riveted or welded & machined to true surface.

xvi. Defects in the material like fractures, cracks, blow holes, lamination, pitting etc. are not allowed. Rectification of any such flaw is permissible only with the approval of the Purchaser.

xvii. Transverse fillet welding on load carrying members shall be avoided. All butt welds on tensile zone shall be X-rayed/ Ultrasound tested. 100% of top & bottom flange, 40% of web plate of box girder and 25 % of circular joints shall be radio –graphed to ensure freedom from defects. All other welds should be subjected to Magnaflux or Dye Penetration Test. Test Inspection documents shall be produced before the inspecting agency.

xviii. Plates, bars, angles and where practicable other rolled sections used in the load bearing members of structures shall not be less than 8 mm thick. Steel tubes, if sealed at the ends

© 2022 MECON Limited All rights reserved

shall not be less than 4.9mm (6.S.S.G) thick and if unsealed, not less than 8mm thick. For cranes working outdoor or in corrosive conditions, a corrosion allowance of 1.5mm shall be added to the thickness of the member required to resist all calculable stresses and the minimum thickness of the member shall, however , be not less than 10mm. Minimum thickness of chequered plate for platform shall be 6 mm over plain for indoor crane and 8 mm O/P for outdoor cranes. Chequered plates shall not be considered in computing strength of load carrying members.

The ratio of effective length 'I' to the least radius of gyration 'r' for compression members shall not exceed 120 for all main members i.e. for both the main and auxiliary girder members and top and bottom plan bracings and 180 for secondary members.

xix. For hot metal handling /Scrap Charging Cranes/ Slag Pot Handling cranes, heat shields shall be provided below bridge girder, trolleys frame, spreader beam, operator's cabin and other key areas to protect the equipment from flame coming out at the converter at the time of charging / heat radiated from steel ladle.

xx. For Hazardous areas carne , all the electrical component of the crane shall be of flame/explosion proof enclosure suitable for Gas group IIA , IIB & IIC and Temperature class T1 to T4 confirming to IEC-60079- Part-0 & I) 2011.

All the explosion proof fittings etc shall have CMRI certificates and the serial nos. shall be punched on the items.

xxi. Minimum running clearance between bottom of LT gearbox of Gantry/ Semi Gantry crane and finished floor level shall be 125mm.

xxii. **Apart from above, following features shall also be provided in the cranes (wherever required).**

a. Weighing system with display unit.
b. Magnet and magnet panel.
c. Anti-swing arrangement.
d. Anti-collision switches (Radar based).
e. Gear box for MH with condition based monitoring devices.
f. Wireless communication from crane to shift control room and load cell data from crane to process control room.

© 2022 MECON Limited All rights reserved

g. Online grease systems with two numbers 50 kg portable grease pump plunger type SKF-LINCOLN to be supplied.

h. Automatic oil type LT rails lubrication system and wheel lubrication system for main & auxiliary trolleys wheels.

xxiii. Painting and erection procedure shall be as specified elsewhere in the GTS.

xxiv. **Tolerances:**

The Bidders/Supplier shall ensure that the crane shall be manufactured as per the tolerances specified below:

i)	Span over LT wheels	:	± 6 mm upto 40 meters
ii)	Wheel base		
	LT	:	± 5 mm
	CT	:	± 3 mm
iii)	Difference in diagonal		
	LT	:	± 5 mm
iv)	Long travel wheel alignment	:	± 1 mm
vi)	Trolley wheel gauge	:	± 3 mm upto 7500 mm span ± 5 mm above 7500 mm span
vii)	Trolley track gauge	:	± 3 mm upto 7500 mm span ± 5 mm above 7500 mm span
viii)	Difference in height between trolley rails (H) in relation to the trolley track gauge (S) shall be within the following tolerances.		
	'S' (mm)		'H' (mm)
	Above 2500 and upto 4500	:	6

© 2022 MECON Limited All rights reserved

	Above 4500	:	10
ix)	Horizontal bend of girder in plan	:	Span 2000
x)	Shift of the web plates of main & end girders from vertical over height 'H' measured near the mid span & close to the main diaphragm.	:	H. 250
xi)	Twist of the main girder	:	Span 1500
xiii)	Tolerances on camber		
	Upto 4 mm	:	+ 4 - 0
	Above 4 mm and upto 8 mm	:	+ 5 - 0
	Above 8 mm and upto 16 mm	:	+ 6.3 - 0
	Above 16 mm and upto 31.5 mm	:	+ 8 - 0
	Above 31.5 and upto 63 mm	:	+ 10 - 0
xiv)	Over buffer length (Over buffer dimension on two sides shall be same)	:	± 5 mm
xv)	Height of Centre of buffer from top of track rail		± 5 mm

xxv. The supplier shall ensure that minimum amount of assembly at site is necessary for early

© 2022 MECON Limited All rights reserved

commissioning of the crane after delivery. Site welding and riveting shall be avoided as far as possible.

The Supplier, before proceeding with design details shall satisfy himself about the site conditions so as to avoid any difficulty in erection, arising out of design.

xxvi. The crane shall be completely assembled and tested in the Supplier's works and no load testing/ free running test of the crane shall be carried out in presence of purchaser's representatives. Moreover, Main trolley shall be load tested at manufacturer's premises .Remaining test shall be carried out at Purchaser's premises in line with clause.10.A.02.1).xxviii.

xxvii. The following test shall be carried out at manufacturer's works during inspection.

- High voltage test of panels.
- Contactor sequence test for all motions.
- Speed test of gear boxes.

xxviii. Necessary clearances from statutory authorities (if any) shall be obtained before the cranes are put under operation immediately after the cranes are commissioned.

xxix. **The crane after erection shall be tested as follows**:

a) Insulation tests and other tests mentioned in IS: 3177-2020 and IPSS (as applicable) shall be carried out.

b) **<u>Deflection Test</u>**

The deflection test of the bridge girders shall be carried out as per IS: 3177-2020/ IPSS. After the deflection test with safe working load, the crane shall be tested for deflection with 25% over load and there shall not be any permanent set after the removal of the load.

c) **<u>Speed Tests</u>**

i. All motion of the crane shall be tested with rated load, voltage and frequency on all notches at the time of commissioning of the crane at site and the speeds shall be attained within the tolerance limit as specified below:

a) Hoisting : $\pm$ 10% }

b) Lowering

© 2022 MECON Limited All rights reserved

c) Travel& Traverse : +25%, -10% } of specified speed

: ±10% }

Note: Micro/Creep speed in hoist, CT & LT motions shall be achieved through VVVF Control only.

i. All motions of the crane shall be tested with 25% over load in which case the specified speeds need not be attained but the crane shall show itself capable of dealing with the over load without difficulty.

d) <u>Brake Tests</u>

i) The hoist brakes shall be capable of braking the movement with rated as well as over load. However, the braking path with rated load shall not exceed hoisting speed/ 150 for class M4 & M5 (II) duty cranes, speed/ 120 for class M6 & M7(III) duty cranes, speed/100 for class M8 (IV)duty cranes.

ii) The long travel and cross travel brakes shall be capable of arresting the motion within a distance in meters equal to 10% of the speed in meters/ min and the retardation due to braking shall not exceed the values as given in the table below :

Working condition of the crane	**Retardation, according to percentage number of driving wheels, in m/sec^2**		
	100	**50**	**25**
Outdoor (When μ = 0.12)	0.9	0.45	0.25
Indoor (When μ = 0.2)	1.5	0.75	0.40

Legend μ = Friction Factor

xxviii. Dimension of all parts used on crane/equipment shall conform to metric standards.

xxix. All the electrical equipment shall be of reputed make and proven quality with regard to their performance. The make shall be as per approved list of Purchaser/ Consultant.

xxx. Some of the crane parts, if specified, shall have to be manufactured as per Purchaser's specifications and drgs. Purchaser's preferred make of equipment if any, shall be adhered

© 2022 MECON Limited All rights reserved

to.

2) **QAP INSPECTION & TESTING:**

Stage Inspection & testing of equipment at supplier's works shall be carried-out as per approved QAP. The crane shall be offered for inspection and testing during different stages of its manufacture, starting from raw materials till the completion of the crane, by the Purchaser/ his authorized representative at the Supplier's or his sub-supplier's works as per the inspection procedure mutually agreed between the Purchaser or his authorized representative and the Supplier.

Inspection shall be regarded as a check up and shall be in no way binding on the Purchaser.

3) Structural Details

i) **Crane Bridge:**

The crane bridges shall comprises of double/four girders of welded double/ single web box construction and shall be designed as per IS: 807-2006;IS: 800-1984/2007 and/or AIST No. 6, FEM and DIN. However, for calculation of Maximum Permissible Bending Compressive Stress in Beams and Plate Girders clause no.6.2.3 of IS: 800-1984 shall be taken into the consideration. The materials of construction shall be steel Grade E250 (Fe 410W) of 'B' quality to IS: 2062-2006. High strength weldable structural steel also may be used wherever required in compliance with the relevant standards. In the girders, in addition to the required full length diaphragms, short diaphragms should be inserted as per design requirement to transmit the trolley wheel load to the web plates and to limit the maximum stress in the trolley rail to safe permissible limits. All diaphragms must bear against the top flange. Steel plates used for bridge girders and diaphragms should be Grade 'B' to IS:2062-2006.

The box girders should be so constructed as to eliminate any possibility of accumulation of water or oil inside them. Special care should be taken with cranes for outdoor use to eliminate depressed areas or openings where water may accumulate and lead to corrosion.

© 2022 MECON Limited All rights reserved

The bridge girders should be connected to the end carriages by large gusset plates. Ground tight fit bolts in reamed holes should be used for bolted connections.
Connections in general should be as per relevant clauses of IS-800 (latest). Black bolts should not be used in the main structure of the crane, only bright bolts with ground stems being permissible. Bolts used in shear should be fitted into reamed holes.

The calculated strength of rivetted joints, or joints made by High Strength Friction Grip (HSFG) bolts should not be less than calculated net strength of the member.
The calculated strength of other bolted joints in structural members should not be less than the net strength of the member plus 25%.

In case the design of structures is based on IS: 807-2006 the following forces shall also be taken into consideration.

i) Vertical reaction on trolley rail arising from surge load.
ii) Skewing force.
iii) Collision force due to buffer impact.
iv) Additional vertical force due to tilting of trolley in case of rigid mast crane.
v) Torsional moment due to cantilever load, eccentric wheel load (in case of wide BOX girder), starting/ stopping of LT motor.
vi) Local bending stress of the flange.
vii) Horizontal force due to acceleration and decelerations.

Corner switch shall be provided at all the four corners of the crane bridge if the crane is cabin operated.

ii) Bridge Girder:

The design of bridge girder shall be in accordance with the latest edition of IS: 807. Allowable stresses shall be calculated in accordance with clause no.6.2.3 of IS: 800-1984. The crane bridge girder should be of box construction with double web plate and shall be preferred to lattice type. For plate box girders, full length diaphragms, must be provided at bridge drive supports and line shaft bearing pedestals. In addition to the

© 2022 MECON Limited All rights reserved

required full length diaphragms, short diaphragms shall be provided to transmit trolley wheel load to the web plates and to limit the maximum stress in the trolley rail within safe permissible stress.

All diaphragms must bear against top flange. The thickness of the diaphragm must be sufficient to resist the trolley wheel load in bearing on the assumption that the wheel load is distributed over a distance equal to width of the rail base plus twice the thickness of the flange plate.

The girder shall preferable made in one piece. However, girders above 20 m span may be spliced. The number of such splices shall not exceed 2 upto 36m span. Beyond 36 m span, the number of splices may be 3.

Splices shall be designed to resist all the forces and moments to which it is subjected to, plus 50% thereof. However, in no case the strength developed by the splice shall be less than 50% of the effective strength of the material spliced.

Splices shall be proportioned and arranged so that the gravity axis of the splice is in line with the gravity axis of the members joined so as to avoid eccentricity of the loading.

Black bolts shall not be used in the main structure of the cranes.

Each girder should have double web plate. Girder should be sufficiently strong and rigid to withstand the most severe combination of loads that may develop under different working condition.

The effective length of bridge girder should not be considered less than 85% of the span while calculating the allowable stresses.

Top flange of the girder should not be considered as giving support to rail in computing the rail size.

Cross travel rail shall be fixed to the bridge girders by clamping only and not by welding. Clamping space shall not be more than 900 mm apart with welded alignment blocks between two clamps such that the distance of a clamp from any adjacent alignment block shall not be more than 450 mm. Rail stops shall be provided to prevent creeping in longitudinal direction.

© 2022 MECON Limited All rights reserved

Rails shall be made continuous by welding standard length. Trolley rail section should not be considered in design of the bridge girders. Full length wearing plates/resilient pad should be provided under the trolley rails. The wearing plate should be 10mm thick and welded in place to the flange with minimum 5mm continuous welds.
The wear plate should be 10mm to 12mm lesser in width that the CT rail base such that the welds of the wear plates do not project beyond the rail base. Wearing plates should not be considered in the strength calculations of the bridge girders.

Box girders should be so constructed as to eliminate accumulation of water or oil inside them. Mark shall be provided on each of the bridge girder to facilitate erection and squaring (diagonal check) of Crane Bridge.

Girders shall be suitably cambered. The girder of crane shall be designed so that the vertical deflection caused by the safe working load on the trolley with trolley stationed in the middle of the span shall not exceed 1/1000 of span, excluding deflection due to dead load of girders. For plate girders, span to depth ratio shall not exceed 18. For lattice girders span to depth ratio shall not exceed 12.

iii) End Carriage:

End-carriages shall be of double web plate box construction fabricated from plates welded together to form a box except for essential openings which should be reinforced and connected to the girders by welding at shop of by large gusset plates and fitted bolts to ensure maximum rigidity. Suitable stiffening diaphragms should be provided wherever required. The material used should be steel Grade ‘B’ quality to IS: 2062(latest). If more than two wheels required per end- carriage, bogies should be provided or articulated end carriage should be used.

Wherever possible, the end carriages should be in two halves. Each half should be fitted to the respective bridge girder in the manufacturers shop.
End carriages should be of ample strength to resist all stresses likely to be imposed on them under service conditions including collision with the cranes or buffer stops. The strength of end carriages should be such that no other parts of the crane are damaged during the collision.

© 2022 MECON Limited All rights reserved

On the end carriages with more than two wheels, the wheelbase should be taken as the distance between the centers of the outside wheels. The wheel base shall not be less than1/5th of the span.

The end carriages should be fitted with substantial safety stops to prevent the crane from falling more than 25 mm in event of breakage of a track wheel, bogies or axle. These safety stops should not interfere with the removal of wheels.

Suitable jacking pads at a height of 300mm from rail level should be provided on each end carriage for jacking up the crane when changing track wheels. Jacking pads should not interfere with the replacement of wheels.

iv) Trolley Frame

The crab frame shall be made of steel plates and rolled sections in welded construction to form a rigid structure capable of withstanding all stresses that will develop during the working of the crane and should be arranged to afford maximum accessibility to mechanical and electrical parts placed on it. Trolley frame shall be fabricated in one piece if there are no transport limitations. If the trolley is fabricated in more than one piece due to transport limitation, the design of the splice shall be such that one unit of mechanism mounted on one part of the trolley, does not come over the other part.

Drum bearings and supports for upper sheaves should be located so as to equalize the load on the trolley wheels as nearly as possible.

The top of trolley frame should be covered with plates all over except for openings required for the ropes and flexible cable for bottom block etc, to pass.

The openings in the trolley frame should be such as to keep the ropes or cables at least 125mm away from any part of the trolley frame. The equipment should be placed above the trolley top plates as for as practicable.

For any parts placed below the trolley top plate, access for maintenance, repair and replacement should be provided. Hand rails should be provided on all the four sides of the trolley (except in case where protective guard is fitted on the trolley conductor side, hand rails on the three sides only should be provided) with openings on the platform side opposite to the trolley conductor side.

The trolley should be fitted with substantial safety stops to prevent the trolley from falling more than 25mm in the event of breakage of a track wheel, bogies or an axle. This safety stops should not interfere with removal of wheels.

© 2022 MECON Limited All rights reserved

The trolley should be provided with lifting pads for jacking up the trolley on all Four Corners for wheel removal. The jacking pads should be at a height of about 300mm from the rail level and should not interfere with the removal of wheels.

v) Platform & Hand Railings:

Full length chequered plate platforms of adequate width shall be provided along both sides of the cranes in order to ensure easy access to crane crab, long travel gears and other parts. Safety hand railings preferably of tubular construction shall be provided around all access – on bridge foot walks, end carriages, stair cases, landing in operators cabin, trolley etc. with suitable numbers of entrance door wherever required.

Railings shall not be less than 1000 mm height with an intermediate railing at a height of 500 mm. All edges or openings shall be provided with toe-guards, toe angles or bent plates wherever required and shall be minimum 100 mm height. Platforms to facilitate inspection and dismantling of long travel wheels and main current collectors shall be provided.

The platforms along the bridge girders and over the crab shall allow convenient access for replacement, inspection, lubrication etc. for different mechanical and electrical components.

Foot walks shall be of sufficient width to give at least 500 mm clear passage at all points except between railing and bridge drive where this clearance may be reduced to a minimum of 400 mm.

vi) Operator's Cabin:

An arm chair type control unit containing all necessary master controllers, push button units, selector switches, indicating lamps, foot switch, etc. shall be fitted in the Operator's cabin. Operator's cabin shall be of welded construction and located below bridge girders.

Closed operator's cabin shall be provided with adequate glazing to ensure good vision in all directions and glazing shall be accessible for cleaning from cabin itself. Arrangement shall be made to ensure that whole exterior of cabin glazing shall be safely cleaned

© 2022 MECON Limited All rights reserved

without any additional scaffolding. Access to the operator's cabin from the bridge girder walkway platform shall be via stair cases only and not through ladders. Minimum widths of staircase shall be 600mm

The closed cabins shall be equipped with circulating and exhaust fans whereas open cabins shall have only circulating fans.
Air conditioned cabins shall be provided with double glazing & heat insulation.

All glazing shall be of toughened glass of 6mm thickness and shall be installed from inside. The temperature inside the A/C cabin shall be maintained at 25^0 C$\pm$ 2 ^{0} C. with outside temperature ranging from 49^0C to 60^0C with occasional pick of 71^0C. Split type A/C unit of approved make shall be provided. The refrigerant used in A/C unit shall be R 227ea.

The modular frame structure of the cabin shall be made of steel profile allowing flexibility in window and door location. Cabin shall have sufficient space for easy movement of operator. Minimum inside clear Height, Width and Length of the cabin shall be 2000 mm X 1600 mm X 2100 mm. The outer wall of the cabin shall be zinc-coated steel; the inner walls shall be fire resistance coated plate.

The walls, roof floors and the lockable door shall be insulated with non-flammable material. The layout of the cabin shall fulfill the latest requirements in safety and ergonomics.
The controls shall be within the easy reach of the operator and cables shall be neatly hidden either in the walls or in floor. The cabin shall have large, 6mm thick laminated glass windows in front and in sides giving an unlimited view of the working area. The windows shall be protected by safety gratings and can also be opened for cleaning. The fixed floor window shall be made of 10mm thick laminated glass.

The cabin floors shall be covered with heat and electrically insulated material. For cranes working in hazardous area like hot metal charging, skull breaking yard etc., the cabin shall be adequately protected and special explosion proof cabin with glasses shall be used for charging cranes.

© 2022 MECON Limited All rights reserved

If required, wind shield wipers with washing unit shall be provided. Cabin cleaning platform shall be provided for complete cleaning of cabin glasses.

vii) Repair Cages & DSL Guards:

Repair cage should be provided on the inside of the end carriage for attending to the current collectors.

Repair cage should also be provided at the corners of the crane to facilitate removal of Long Travel wheels. The repair cages should be minimum 1000 mm wide and should be such that two persons can work comfortably in the space provided.

The floor of Repair cage should be about 1500mm below the LT wheel centers except the one on which the main current collectors are mounted, where it shall be suitably adjusted.

The cages shall be made of structural steel and should be made substantially rigid by gusset plates and braces, welded or riveted. Repair cages should be provided with railings on all sides except, for the repair cages on the down shop lead side, which shall be provided with easily removable type protection guards on three sides for safety reasons.

Suitable guards or enclosures shall be provided on the crane to prevent inadvertent contact of hoist ropes with Down Soap Leads or any other exposed electrical conductor or cables.

4) Mechanical Details

i) **Rope drums**

Rope of drums shall be of cast steel or fabricated out of rolled steel plates. Fabricated drums shall be stress relieved before machining. The grooves of the drum shall be smooth finished. Rope drum shall be flanged at both ends.

Drums shall be designed for single layer of ropes only. The drum shall be of such length that each lead of wire rope has a minimum of two full turns on the drum when hook is at its lowest position not taking into consideration the turns covered by the wire rope

© 2022 MECON Limited All rights reserved

anchorage and one spare groove for each lead of the wire rope on the drum when hook is at its highest position.

Drums shall be designed to withstand the compressive stress caused by the wound of wire rope, bending stress due to beam action and torsional stress.

As applicable diameter of rope drum shall be calculated in accordance with IS: 4137-2015 recommendation.

ii) Rope sheaves

Rope sheaves shall be of cast or forged steel or fabricated out of rolled steel plates. All sheaves shall be identical; however, exception may be made for equalizer sheaves. Sheaves grooves shall be smooth finished for getting increased life of rope. The equalizer as well as upper running sheaves shall be mounted on trolley frame and shall be easily accessible and removable from the floor of trolley. In case, upper (top) sheaves are not mounted on the trolley frame top, access approach and maintenance platform shall be provide below the sheaves for the ease of maintenance.

All sheaves shall be protected by rigid cover to avoid jumping out of rope from sheave at any possible inclination having a clearance not more than 1/3rd rope diameter along it's external diameter between sheave and inside the guard.

All sheaves shall be mounted on antifriction bearings. Sheave bearing shall have inner and outer race. The inner race may be a hardened part of shaft.

Diameter of All sheaves shall be as per IS: /IPSS recommendation depending upon duty class of mechanism. The lead angle of the ropes relative to the sheaves should not exceed the ratio of 1:12.

iii) Wire ropes

The ropes shall be hemp cored for all cranes except hot metal cranes (where these shall be steel cored galvanized/ un-galvanized). For Hot metal cranes, independent two rope suspension system shall be provided where each system shall be capable of safely sustaining the load incase of failure of other. Steel core wire ropes shall only be used for Hot Metal Handling Cranes. The ropes, working under water and in corrosive atmosphere, shall be galvanized and shall have steel core. Ropes shall be regular right hand lay as per IS: 2266-2002. The construction of the ropes shall be 6 x 37 upto 16 mm

© 2022 MECON Limited All rights reserved

diameter and 6 x 36 above 16mm diameter of best plough steel having minimum tensile strength of 180kg/mm^2 conforming to IS 2266-2002.

In case of two falls non-spinning rope shall be provided. Factor of safety for hoist ropes shall be as per IS: 3177/IPSS/FEM/ISO as applicable. **Factor of safety for wire ropes of hot metal handling cranes shall be strictly considered as 9.** Reverse bend in ropes shall be avoided as far as possible

iv) Hook(Load) block & Lifting Hooks

Hook block shall be of welded steel construction and entirely enclosed except for rope openings. Smooth opening shall be provided in the guards to allow the free movement of rope, and holes shall be provided for drainage of the oil.

Standard plain shank type trapezoidal section hooks shall be provided unless otherwise specified. These hooks shall confirm to IS: 15560-2005. In case of Rams horn hook IS: 5749 -1970 shall be followed.

The hook shall be of high quality forged steel, stress relieved, and the nut shall rest on enclosed greased packed roller thrust bearing which shall be seated in an accurately finished counter bore.

Hooks shall be mounted on grease anti- friction thrust bearings and a protective skirt shall be provided to enclose the bearing. Locking device shall be provided to prevent rotation of hook. The hook shall have safety latch/closing finger to prevent jumping out of rope slings/suspension chain of electromagnet etc.

Proof load test as per Indian Standards Specification shall be conducted, either in-house or from a recognized test house. The certificate of proof load test with date of next due shall be furnished.

v) Ladle Lifting Hook

In Hot metal ladle lifting crane, main hoist hooks shall be laminated hook confirming to IPSS 1-08-009-83 or AIST No 7 or DIN 15407.

The hooks shall be made of rolled steel plates of FE- 410 W conforming to IS: 2062-2006. The thickness of each plate shall not be less than 16mm and not more than 32mm. the length of the hook shall be in the direction of rolling. All plates used in the ladle hooks shall be straight, flat and free of flaws and defects. Straightening or flattening by

© 2022 MECON Limited All rights reserved

application of heat shall not be permitted. The holes for rivets shall be drilled with the plate held together in a packet and if necessary, reamed to size.

Rivet used shall be either counter shank or button head. Gap between lamination shall not exceed 0.1 mm for a distance of 2 times the rivet diameter from edge of rivet hole. Gap in other areas shall not exceed 0.25 mm.

The inner surface of the hook that comes in contact with ladle trunion and the outside tip of the hook shall be protected by steel wearing plate not less than 16 mm thick. The outside edge of wear and wrapper shall be beveled and joined to the hook plate by continuous welds.

Wearing plates in height shall be continuous throughout and no transverse weld shall be used. In case cast steel liners are used, these shall be secured by only counter-shunk bolt.

The eye end of laminated hook shall be provided with a steel bushing, the bushing shall be welded continuous or press fit and suitably locked. It shall have a minimum thickness of 12 mm and heat treated to 280-300 BHN hardness. Suitable grooves shall be provided in the bush for greasing.

vi) Gears & gear- boxes

Straight and helical spur gearing shall only be used for all motions. Bevel planetary gears shall be used for Slew Motion (for Rotating Trolley, Rotating Beam and Rotating Hook etc).

Worm & bevel gearing may be used in exceptional cases with the specific approval of the Purchaser. All first and high speed reduction gears shall have helical teeth. All pinions shall be integral with the shaft.

All gears shall be hardened and tempered alloy or carbon with machine cut ground teeth in metric module system. All pinions shall be of nickel-chrome. The gears shall have positive addendum modification to improve contact & sliding conditions and to increase the bending strength of pinion and the surface strength of tooth flank by approximately 30%.

Overhung or split gears and pinions gears shall not be used.

© 2022 MECON Limited All rights reserved

Surface hardness for pinion shall be 255 to 350 BHN and for gears it shall be 217 to 260 BHN. Difference in hardness of pinion and gear shall not be less than 20 BHN. All cast steel gear shall be tested by Gamma Ray.

All gears shall be enclosed in oil tight gear boxes. Gearboxes shall be held on the base plates through reamed holes and tight fit bolts. The fittings shall be done after ensuring the proper alignment of the gear box and the base plate, with suitable Dowel pins for easy realignment of the gearboxes whenever required. Gear-boxes shall be of cast steel or fabricated and split at each shaft centre lines so that top half can be removed for inspection without disturbing bottom half.

Fabricated gear boxes shall be stress relieved before machining. All gear shafts shall be supported in bearings mounted in gearbox.

For cross travel and long travel motion, vertical gear-boxes with 'T' split may be used. Hoisting motion of hot metal and four rope grab cranes shall be preferably by means of planetary gear box.

Gear boxes shall be provided with breather –vents, oil level indicator, dip stick, magnetic drain plug, inspection cover, lifting lug etc.

In general, the reducers shall be selected with a service rating of 1.5 times the selected motor of each mechanism .The thermal rating of gear boxes shall not be less than 1.25 times the motor kW rating. **Moreover, all gear boxes for hot metal cranes shall have factor of safety more than 2.2.**

The following guidelines shall be followed for speed ranges of main motor:

a) Class- II (M5,M6) duty cranes :
   Main & auxiliary hoist 750 rpm
   Long & cross travel 1000 rpm

b) Class M7 & M8 (III & IV) duty cranes:
   Main & auxiliary hoist 750 rpm
   Long & cross travel 750-1000 rpm

Note: Motor rpm for hoist mechanism may change as per purchaser requirement)

© 2022 MECON Limited All rights reserved

vii) Long Travel drive:

For travel motion, driving mechanism shall consist of electric motor which shall be connected to 2-3 stage reducer by means of flexible gear coupling. Vertical gearbox shall not be used for LT drive unless otherwise agreed by Purchaser. Low speed shaft of the reducer shall be connected with the driving wheel by means of floating shaft and geared coupling. Connection of LT wheels by means of cordon shaft may also be accepted. Brake shall be installed on the gear box input shaft in such a way that there is accessibility for maintenance.

For Double girder EOT cranes, LT drive shall be of two corner drive/four corner drive arrangement. For crane of span less than 13m, central LT drive with floating shaft may be provided if agreed by the Purchaser/ Consultant.

For Class M6 to M8 duty FG/DG EOT cranes, LT drive shall be 4 corner drives and 50% of LT wheels shall be positively driven unless agreed otherwise by the Purchaser/Consultants.

In Case of Four corner drives (4 motors in two groups), the arrangement shall be so that, if any one corner motor of particular group fails, the other motor of same group on the same girder should also trip to avoid skewing of the crane and two other motors of other group should be capable to run the crane with full load with reduced acceleration (50% of design value).This arrangement shall be for emergency purpose and non-functioning motor to be repaired or replaced immediately.

viii) Cross Travel drive:

Cross Travel drive shall be two/four corner drive. No part of Cross Travel Drive shall be below the trolley platform. Suitable platform shall be provided below the CT drives for ease of maintenance. In case of 2 corner common drive through floating shaft, low level platform of sufficient width with hand railings and access ladder/step shall be provided below the CT drive mechanism.

In case of geared motor, platform shall be provided below the CT drive mechanism.

For hot metal handling crane main trolley shall be provided with four corner drives. The arrangement shall be so that, if any one corner motor fails, the other corner motor on the same side should also trip to avoid skewing of the trolley and two other motors should be

© 2022 MECON Limited All rights reserved

capable of driving the trolley at full load and full speed at reduced acceleration ((50% of design value).

ix) Hoist drive arrangement:

For the hoist driving mechanism of the crane, electric motor shall be connected for the typical 2-3 stage horizontal reducer through geared coupling.
Torque shall be transmitted from the output shaft of the reducer to the rope drum by means of flexible drum /barrel coupling of well tried out design. Brake shall be mounted on the input shaft of the gear box.

In case of hot metal handling crane, main hoist mechanism shall be provided with planetary gearbox with duel drive system to facilitate uninterrupted operation of hoist mechanism i.e. the main hoist can be operated with one motor at a speed of ½ of rated speed in case of failure of other motor.

All hoist motions shall be provided with heavy duty limit switches to prevent the crane hook from over hoisting and over lowering.

The limit switch shall be screw type with self resetting feature and be incorporated for the control circuit of the respective drive motor.
Apart from this, one counter weight operated (gravity type) limit switch shall be provided in the under voltage release circuit of the incoming air circuit breaker.

Drive of the drum by means of spur ring mounted on the drum shall be avoided as far as practicable.

x) Couplings

Motor shaft shall be connected to the gear-box input shaft through flexible shock absorbing coupling excepting pin bush type. Coupling for bridge drive and trolley cross shafting shall be either the bolt flange type or bolted split compression sleeve type and shall be forged or cast steel.
In case of single motor central drive for long travel motion, output shaft of the gear-box shall be connected to the line shaft through half geared couplings. Intermediate lengths of the line shaft may be connected through solid flange couplings.

Half geared couplings with floating shaft shall be provided between the wheel and the line shaft.

© 2022 MECON Limited All rights reserved

Flanged couplings shall have body bound bolts. All couplings shall be light press fit on shafting. Couplings shall be located at a distance not to exceed four times the shaft diameters from a support bearing. All meters and high speed shaft couplings shall be forged alloy steel, flanged sleeve, gear type with adequate seals and lubrication facility.

Hoist barrel shall be connected to its respective gear drive by means of flexible roller type barrel coupling. The barrel coupling shall maintain the correct alignment between the barrel wheel and pinion and shall eliminate the oil leakage problem very often experienced at the output of the hoist gears.
This barrel coupling shall offer simplification of maintenance and the gearbox and barrel shall be treated as separate items.
All rotating parts shall be suitably covered by 3.15 mm thick sheet steel hinged covers for safety.

xi) Wheels

Crab/crane wheels shall be double flanged. Wheels shall be mounted in anti-friction roller bearing housed in 'L' shaped bearing brackets for easy removal during maintenance. Flangeless wheels with guide rollers are also acceptable.

All wheels shall be of solid type which shall be either of forged or rolled or cast steel. Material for wheel shall be 55C8 conforming to IS: 1875-1992 or 42CrMo4 or better (EN-8)/. Contour case hardened track wheels shall be used to provide high hardness wear resistance surface supported by tough ductile core.

Heat treated wheels shall have minimum hardness of 300 to 350 BHN on rolling surface and flange to a depth of not less than 10mm.

Minimum diameter of wheel for Cross Travel shall be 320 mm. Minimum diameter of LT wheels for class I & II (M1 to M5) duty cranes shall be 400 mm and for class III & IV (M6 to M8) duty cranes shall be 630 mm. As applicable, selection of wheel diameter shall be in accordance with IS: 3177and IPSS.

If desired by Purchaser, Wheels from 400 mm diameter and above may consist of hardened, roller/forged steel tyre of not less than 60 mm thickness, shrunk on to cast steel centre

The width of wheel tread shall be greater than the rail head by an amount which shall suitably allow for the known variation in the gantry rail alignment and gantry track span

© 2022 MECON Limited All rights reserved

dimensions. However, minimum tread width of LT wheels shall be 30mm more than the rail head width and that of CT wheels 20 mm more than the rail head width.

xii) **Shafts and Keys**

All shafts shall be made of steel. Plain shafting, 150mm or below in diameter, not having swell or increases shall be cold or hot rolled or drawn.

Shafting above 150 mm diameter shall be forged and machined to size and if not hardened, shall be stress relieved. Shafts and axles shall have ample strength, rigidity and adequate bearing surfaces.

Suitable surface finish for stressed portions of the shafts shall be selected having regard to size, stress levels, severity of stress raising features and the needs of bearings, seals, etc. Adequate allowances shall be made for the effective losses in section due to key-ways, splines, etc.

Large changes in the section shall be avoided wherever possible. All shafts shall be supported on minimum two bearings.

The travel driving shaft or shafts shall be supported on self aligning bearings at a distance so that the deflection due to the self weight of the shaft is between 0.03 to 0.05 percent of unsupported length of the shaft.

Angular deflection of the line shaft at torque corresponding to 1.5 times the motor torque during acceleration period shall not be more than 0.25° per meter of shaft length. Each part of the drive shaft shall be designed to transmit maximum torque due to the most unfavorable load position.

In proportioning shafts, allowance shall be made for keyways and splines. Changes in section in shafts shall be made with due allowance for stress concentration.

Splines and serrations shall be of involutes or straight sided form, which shall comply with relevant Indian Standards.

Mounting - All gearing, couplings, brake wheels and other parts shall be pressed on their shafts if keyed. This does not preclude other forms of attachment. Spur pinions may be solid with the shaft.

Keys shall be provided for all the connections subject to torsion, except idler track wheels and drums, which are not driven through shaft. When tapered keys are used, shafting shall be increased in diameter, to the nearest 3 mm increment, to twice the key-

© 2022 MECON Limited All rights reserved

seat depth for a distance equal to the length of the hub fit for pinions, gears, track wheel and drums. When parallel – faced sunk keys are used, the shaft shall be increased in diameter by 10% to the nearest 3 mm increment. A generous fillet or long taper shall be provided at each end of the swell.

Keys and keyways shall comply with relevant Indian Standard.

xiii) Bearings & bearing housing

Anti-friction bearings shall be used throughout except where required otherwise for technical reasons.

Bearings for bridge and trolley wheel axles shall be tapered or spherical, precision solid roller type with inner and outer races, M.C.B (Mini Car Builders) type, mounted and enclosed in self contained individual housing or similar.

These housings shall be secured to machined bearing seat with body bolts fitted into drilled and reamed holes. Bearings for reduction gear units shall be similar except that they shall be mounted in the gear case in precision bores. Bearings for bridge drive cross shafting shall be mounted in self-aligning steel housings. Bearings for sheaves shall be of anti-friction type. All bearings other than gear case mounted type shall be provided with seals and lubrication fittings. Bearings on cross shafting shall be located on centres not to exceed the distance of 36 X shaft diameter. All bearings mountings allow for shaft expansion where required. Bearings shall have both radial and thrust load capability.
The bearings shall have minimum static load capacity Fsb for a particular duty as given below:

$$Fsb = P \times Cdf$$

Where
P = maximum static load on the bearing under any load condition and for the equivalent load to be determined as specified by the manufacturer.

Cdf = duty factor as defined in IS: 3177-1999.

Life of the anti-friction bearings shall be calculated in accordance with the manufacturer's recommendations and based on working hours specified for the duty of the mechanism.

However, bearing used shall be class 'F' and minimum B-10 life except motor bearings, shall be 40,000 Hours.

© 2022 MECON Limited All rights reserved

xiv) Buffers

Spring loaded/ hydraulic type buffers of reputed (Oleo/Jarret) make shall be provided for bridges as well as trolley motions of class III & IV (M6 to M8) cranes whereas rubber buffer may be used for class I & II (M1 to M5) duty cranes of other than steel plant.

Amount of impact forces shall be decided depending upon the type of buffer selected. Buffers shall be rigidly bolted in place, preferably along the center line of crane rail or trolley rail as the case may be. All buffers should have sufficient energy absorbing capacity to stop the bridge or trolley in either direction when travelling at a speed of at least 40% full load rated speed. Bridge buffers shall be located vertically above the LT rail center line and mounted to provide proper clearance when the buffers of the two cranes comes together and both are fully compressed.

xv) Brakes

The brakes shall be provided for all motions on the high speed pinion shaft of the gear train.

For hot metal handling crane two brakes shall be used per motor of hoisting mechanism.

Each brake shall have minimum braking torque of 125% of computed full load torque. One of the two brakes per motor shall be applied with a time lag of 3 seconds in relation to the first.

For hot metal cranes, in addition to service brakes emergency brakes shall be provided on the input shaft of the gear box and non drive end of the motor, one set of Hydraulically operated Emergency Safety Disc Brake (DC Electro-Magnetic type) shall be provided on the flange of each rope drum of main hoist mechanism. In addition to this, the main hoist motion shall be provided with suitable over speed sensing device so that in any case the speed of the load tends to exceed the rated maximum speed due to any mechanical failure on any part of the driving system in between driving motor and rope drum, this device will cause the power supply to be shut off and the emergency safety brakes will be applied immediately to hold the load.

In addition to over speed, the drum mismatch to be provided, so that emergency brake should be clamped in case of speed mismatch of drum is above the limit.

Emergency brake shall not be activated under normal condition and shall only be applied on command of the failure detection system or the optional manual emergency

© 2022 MECON Limited All rights reserved

stop button separately installed. For measurement of rope drum speed, suitable pulse echo shall be provided. The failure detection system shall monitor the ratio between motor and drum speed and sense any change in that ratio. Any failure in hoist driven train that would cause a load to drop shall instantly show up as change in the ratio of drum to motor speed.

The system shall be sensible enough to sense the minute difference in ratio that would occur at the very beginning of the incident in order to activate the emergency brake and stop the load coming down instantly.

Hydraulically operated emergency disc brakes shall also have the following features:

a. Switches for position monitoring
b. Switches for lining monitoring
c. Manual release
d. Status Monitoring system
e. Lining for disc brakes shall be designed to withstand temperatures up to 850 degrees and shall be made from metallurgically produced friction material on bronze basis.

For cranes not handling molten metal and have single drive in hoist mechanism, the minimum braking torque shall be 150 percent of computed full load torque. In case, two brakes are fitted, each shall have braking torque not less than 100 percent of the computed full load torque.

The minimum braking torque to arrest long travel and cross travel motion should be not less than 100 % of computed full load torque for each brake and shall not be more than the pullout torque of the motor.

A separate set of parking brake for L.T. motion shall be provided for each outdoor crane.

Power supply for these brakes shall be obtained from protective panel.

All overhead cranes working outdoor shall be provided with an additional storm brake for anchoring it when it is left unattended or under the storm condition.

Gantry cranes working outdoors with rails on ground shall be provided with rail clamps or screws jack or chain anchor at each corner for anchoring it during the storm.

xvi) Lubrication

© 2022 MECON Limited All rights reserved

Motorized Dual line centralized multi-point grease lubrication system shall be for all the bearings for class III & IV (M6 to M8)duty cranes. Progressive Group lubrication system shall be used for class I & II (M1 to M5) duty cranes.

Lubrication of the gears and pinions in the gear-boxes shall be splash fed from the sump. In case of three stage reduction or more, vertical mounted gear-box (having limited motion), are used, an oil pump shall be fitted to ensure lubrication of all gears. CT drive with vertical gearbox with 'T' split shall be provided with dual (one standby) pump for lubrication.

Points requiring lubrication and not provided grease system or re- circulating oil system shall be provided either button head fittings or weigh feed lubrication.

If desired by Purchaser, Automatic oil type rail lubrication system shall be provided for LT rails & wheel lubrication system shall be provided for main and auxiliary trolley wheels. Further, LT rail and DSL cleaning fans shall also be provided.

All equipments shall be suitably lubricated in manufacturer's shop prior to dispatch, if feasible otherwise after erection and installation.

xvii) Crane Attachments:

Hot metal handling crane/ Slag pot handling cranes, main hoist mechanism shall be provided with inbuilt ladle traverse with laminated hook. Ladle tilting hook shall also be provided in the auxiliary hoist mechanism of slag pot handling cranes. The laminated hooks pin joints shall have flexibility in all directions.

- Slab handling cranes shall be provided with fixed/ detachable type rotating/ non-rotating tongs. Scissors opening/closing and tong slew mechanism shall be motorized.

- Coil handling cranes shall be provided with detachable type Double/ Single C coil tong. Scissors opening/closing of double C-coil tong and slew mechanism shall be motorized.

- Grab bucket shall be of 4 rope system. Mn. Steel liners shall be provided on grab bucket teeth tip as well as bucket body. Hoisting and grabbing mechanism shall be performed through planetary gear box.

© 2022 MECON Limited All rights reserved

- For the cranes with electro-magnet, suitable CRD and battery back-up system shall be provided.

- Scrap charging crane shall be provided with inbuilt scrap bucket lifting traverse with laminated hooks.

.

© 2022 MECON Limited All rights reserved

DOCUMENTATION

1) Information to be furnished by the Bidder along with the tender:

The Bidder shall submit adequate sets of following technical drawings & technical data/ information with tender for cranes without which the tender shall be considered as incomplete & may not be considered for acceptance.

a) General arrangement drawings/clearance diagram of the cranes.
b) Filled up questionnaire
c) List of commissioning spares
d) List of spares for two (2) years normal operation and maintenance
e) List of special/ maintenance tools & tackles.

2) List of drawings/ documents to be furnished by the successful Bidder for approval

Following drawings shall be submitted (No. of copies as per General Conditions of Contract) for each crane to the Purchaser/his Consultant in stages for approval/reference within one month of issue of Letter of Intent and prior to commencement of fabrication. The Purchaser/ Consultant shall send his comments within 2 weeks of receipt of the drawings. However, approval of drawings by the Purchaser will not relieve the supplier of his responsibilities for correctness, adequacy of the design and completeness of his work as per the contract. All the drawings and documents will be in English Language. Drawings shall be complete in all respect with dimensions, item lists, etc

a) General arrangement drawing of drawing for each crane and handling attachment, if any, showing to scale the elevation, side view and plan of the crane along with information such as clearances, construction of bridge structure, headroom, hook approaches, LT Rail Level, height of lift, location of operator's cabin with direction of view of operator, location of DSL, wheel base, wheel loads, Total weight of the crane, weight of trolleys, wheel diameters, over buffer dimension, buffer height. LT and CT buffer compressions, motor & brake ratings and other details, hoist, CT & LT speeds, arrangement and disposition of all the drives and other equipment installed on the crane, weight of single heaviest component installed on trolley etc.

b) General layout drawing of the trolley/hoist.

c) Assembly drawing of individual drives likes hoists, long travel, cross travel etc.

© 2022 MECON Limited All rights reserved

d) Sub- assembly drawing for wheels, hook block, hoist drum & pulleys.

e) Layout of cabin showing the location and fixing of all the equipment inside it such as controllers,/ operator's seat, protective panel, isolating and control switches, fire extinguishers, fire alarm system, exhausts and circulating fans, air conditioners etc.

f) Structural calculations for girder, end carriage and connection between the two.

g) Assembly drawing of handling attachments such as Traverse beam, magnets grabs, C-hooks, coil/slab handling tongs, sheet pack lifters etc. along with complete technical characteristics of the same.

h) Wire rope, rope drum and sheaves selection calculations.

i) Wheel selection calculation.

j) Motor power , brake, gear box and coupling selection calculation

k) Lubrication arrangement drawings for the complete crane.

i) Electrical Drawings and Documents

a. Single Line Diagrams for Cranes

b. Connected Load and Maximum Demand Calculation of Crane and Maximum Demand Calculation of DSL of each Bay considering common DSL for total nos. of cranes envisaged in Phase- I & Phase-II of respective bays.

c. VFD (Converter, Inverter) sizing calculations, UPS Sizing Calculation etc.

d. Power and regulation schemes for VVVF

e. Power and control circuit diagram showing the wiring for all the panels for each crane.

f. Bill of materials for each panel and terminal plan drawings for each and every panel and equipment.

g. Inter- connection diagram and cable schedule.

h. Layout of Electrical equipment on crane, Layout of E-House, Arm chair Control Desk, Operator Cabin, Pendant control, cable layout drawings and layout of earthing system for equipment installed on crane.

© 2022 MECON Limited All rights reserved

i. Vendor drawing of Radio Remote Control

j. GA of all panels, junction boxes, limit switches etc. with their technical details

k. Current collection arrangement for the crane and details of current collector.

l. Cable sizing calculation for cables on crane & voltage drop upto motor terminals

m. Feeding Isolator rating

n. General Arrangement of Power supply including Down Shop Lead (DSL) details to the trolleys and attachments.

o. Power supply system including festoon cable arrangement.

p. Motors: Technical data sheets, GA drawings, Characteristics Curves including load superimposed Curves

q. Field devices data-sheets including limit switches

r. PLC vendor drawing (Configuration drawing, GA, BOM, Wiring Diagram, & I/O list)

s. UPS Vendor Drawing

t. Vendor drawing of Crane Weighing along with Radio Communication system

u. Vendor drawing for Electrics of Magnet control panel, Battery sizing

ii) Quality Assurance Plan for inspection

iii) In addition to the above, the Purchaser/ Consultant may ask for submission of other drawings, documents, structural, mechanical and electrical calculations of the crane for scrutiny and reference, if required.

3) List of drawings/documents to be submitted along with equipment by the successful Bidder

© 2022 MECON Limited All rights reserved

Soft Copy along with Hard copies (No. of sets as per GCC) of all drawings and data which have been approved by the Purchaser

Drawings of all equipment/component received from sub supplier.

Test and warranty certificate for each item of equipment.

Test reports and inspection reports.

Instruction manuals for testing and commissioning.

Operation, maintenance and safety manuals.

Requirement of special tools and tackles.

Detail drawing list and specifications of all wearing out parts and parts subject to breakage during normal operating conditions.

List of spare parts with drawings, sketches, specifications and manufacturer's catalogue.

© 2022 MECON Limited All rights reserved

QUESTIONNAIRE

Questionnaire: (to be filled up and submitted for each crane along with the tender)

1. DPR/TPR/ Crane No.
2. No. Off
3. Type of Crane
4. Supplier/ Make
5. Capacity (t)
6. Span (m)
7. Duty Class (As per IS:)
8. Speeds (normal & Creep) m/ min
   a) Main hoist & creep
   b) Aux. Hoist-1 & creep
   c) Aux. Hoist-2 & creep
   d) Main Cross travel
   e) Aux. Cross Travel
   f) Long travel
9. Height of lift (m)
   a) Main hook
      Above floor
      Below floor
   b) Aux. hook-1
      Above floor
      Below floor
   c) Aux. hook-2
      Above floor
      Below floor
10. Crane rail height above floor (m)
11. Max wheel load (t) (without impact)
12. Type of control :
13. Type of hook:
    a) Main hook
    b) Aux hook-1
    c) Aux.Hook-2
14. Location (Indoor/ Outdoor)
15. Hook approaches (m)
    a) Main hook (DSL Side / Opposite Side)
    b) Aux hook-1 (DSL Side / Opposite Side)

© 2022 MECON Limited All rights reserved

c) Aux hook-1 (DSL Side / Opposite Side)

16. No of rope falls, dia, core, construction, tensile designation, lay & breaking strength, F.O.S, make for
    a) Main hoist
    b) Aux hoist-1
    c) Aux.Hoist-2
17. Gantry rail size
18. Crab rail size: (MCT/ACT)
19. Over buffer dimension (m)
20. Wheel base
21. Head room:
22. End Projection from LT Rail center
23. Height of LT buffer Centre from Rail top (mm)
24. Wheel diameter for
    a) LT wheel
    b) MCT wheel
    c) ACT wheel
25. Handling attachments details:
26. Special features (weighing device etc)
27. Motor: (Type, kW, rpm, starts/ hr, % CDF, POT over rated torque, enclosure, insulation and duty class etc) & make.
    a) Main hoist
    b) Aux hoist-1
    c) Aux. Hoist-2
    d) Main Cross Travel
    e) Aux. Cross Travel
    f) Long travel
28. Brake details:
    a) Main hoist
    b) Aux hoist-1
    c) Aux Hoist-2
    d) Main Cross travel
    e) Aux Cross travel
    f) Long travel
29. Type of control for each motion with corresponding characteristic curve :
30. Method of obtaining creep speed:
31. Power supply Voltage
    - Power supply S.L.D:

© 2022 MECON Limited All rights reserved

- Electric equipment specification

32. Control voltage
33. Ambient temp/ Environment
34. Total weight of the crane (t)
35. Break up of crane weight (t)
    a) Structural: b) Mechanical:
    c) Electrical:
36. Total weight of the crab (t):-
    a) Main Trolley-
    b) Aux. Trolley-
37. Code of design
38. General arrangement drawing, incorporating the front and side elevations, plan, hook approaches, location of cabin/ pendant, down shop lead, clearance dimension, handling attachments/ wheel load diagram and other relevant characteristics of the crane.
39. List of deviation from the Purchaser's specification (to be furnished in enclosed format only)
40. Detail of radio remote controls/operations, if provided.
41. Maximum Demand of Crane, Maximum Demand of DSL in each bay
42. Minimum DSL size proposed considering all cranes fed from same DSL
43. Feeding Isolator ratings
44. VFD:
    a. Heavy Duty Current rating
    b. De-rating for 50 Deg C for Category A & B VFD and De-rating for ambient temperature for Category C VFD.
    c. The current rating of VFD/ Invertors shall be minimum **125%** of the rated motor current (for single drive)/ summation of rated motor current (for multi motor drives).
    d. Regenerative Type (**Active Front End**) for Category A VFD
    e. The current Rating of each AFE (redundant) considering **2** largest motions (motor full load current)
45. Redundant PLC Make & Model Considered
46. UPS minimum KVA size selected
47. Radio Communication for transferring weighing signal from Crane to Ground
48. Radar based Anti collision system
49. Magnet Control Panel & 30 min battery backup, NiCd Battery
50. Any other information

© 2022 MECON Limited All rights reserved

02. SINGLE GIRDER EOT/UNDER SLUNG CRANE, CANTILEVER & JIB CRANE

SCOPE OF WORK:

The scope of work of the Bidder shall consists of design, engineering, manufacture, assembly, shop testing, painting at manufacturer's shop as well as at site after erection ,supply FOR/FOT basis including dismantling for transportation, packing, loading and transportation , receipt, unloading, storage and re-conservation at site, erection testing and commissioning and demonstration of Performance Guarantee Parameters of Single Girder EOT/ Under Slung crane, column/Pillar mounted Jib Cranes and cantilever cranes as per agreed technical parameters.

The scope of work of the bidder shall also include the followings:

i) The Bidder shall include necessary commissioning spares in his scope and submit the list of the same. If any more spares other than those finalized are required during commissioning, the same shall be supplied by the Bidder without any cost implication to the Purchaser.

ii) Scope of work of bidder shall also include supply of 2 years essential spares for each crane. The Bidder shall furnish consolidated list of essential spares for 2 years of normal operation for each crane with item wise price. The list shall be finalized after discussions between Purchaser & Bidder.

iii) The scope of supply shall cover the required quantity of initial fill of lubricants, hydraulic fluid, other consumables necessary for testing and commissioning of the cranes.

iv) The scope of supply shall cover the necessary tools and tackles required for maintenance or testing/inspection.

© 2022 MECON Limited All rights reserved

v) The scope of supply shall cover required quantity of paints for intermediate, final coat and retouching. All cranes shall be painted as per specification prior to despatch. Necessary surface cleaning by mechanical power tools as well as blast cleaning of the surface required as per TS have to be done before painting. The equipment has to be painted with requisite grade of primer and intermediate paint prior to despatch. Necessary heat resistant, anti corrosive and special paints have to be applied as per requirement. The detail painting procedure to be followed by the successful Bidder .

vi) Design, manufacture, supply, erection of Down Shop Lead (Angle Bus Bar/Shrouded Bus Bar/ Flexible Festoon Cable type, Drag Chain) along with fixing accessories shall be under the scope of supply of the Bidder.

vii) Supply of drawings and documents shall be as per relevant clauses of this GTS.

viii) The scope of work shall stand supplemented by stipulations mentioned elsewhere in this GTS or anywhere else in the Tender document.

Technical Specification

General

- The cranes shall be designed, manufactured, assembled and tested in accordance with IS:15419-2004,807-2006, IS:3177-2020, IS:3938-1983 and other relevant codes and practices for the cranes to be used in steel plants, steel industry (IPSS) unless otherwise stated. IPSS (wherever applicable) shall also be followed.

- The components of the hoist shall be designed, manufactured, assembled and tested in accordance with the latest revision of IS:3938 and shall be of standard make.

- All working parts requiring replacement or inspection or lubrication shall be easily accessible without the need for dismantling of other equipment or structure.

- All electrical cables shall be so laid that they are not liable to be damaged and can be easily inspected and tested.

- For out-door cranes all electrical and mechanical components which are exposed to weather shall be completely covered or made weather proof. The covers shall be in segments to facilitate easy dismantling and assembly.

© 2022 MECON Limited All rights reserved

- No cast iron parts shall be used except for electrical equipment and no wood or other combustible material shall be used unless specifically mentioned otherwise.

- Where down shop leads are located below runway rails, guard shall be provided on the crane to prevent the hoist ropes from coming in contact with down shop leads.

- All bolts except those with nyloc nuts shall be provided with grip lock nuts or spring washers.

- All trailing cables shall be clamped with PVC or non-metallic clamps.

- Steel frames carrying machinery shall be machined to true surface.

- All gears and bearings shall be lubricated by splash lubrication/ grease as required. All greasing points shall be easily accessible.

- **Testing**

A. At Manufacturer's Works

The supplier in the presence of the Purchaser shall carry out following tests:

1. Visual check

The crane after assembly shall be visually checked for any defect in the workmanship.

2. Dimensional check

All dimensions of the crane shall be checked as per the approved general arrangement drawings. Diagonal measurement of the crane/hoist shall also be carried out in the shop before despatch to site. The dimension of the cranes after assembly shall be within the tolerances specified below:

Span over L.T. wheels	:	+3 mm
Diagonal on wheels	:	+2 mm
L.T wheel alignment	:	+1 mm
Tilt of wheel	:	+1 mm/1000 mm (Vertical & horizontal)
Over buffer length	:	+5 mm (Over buffer dimension on Two sides shall be same)
Load test for hoist	:	As per IS:3938-1992

No load running test of the L.T. mechanism of the crane.

B. At Site

© 2022 MECON Limited All rights reserved

1. **Visual check**

a) The crane after erection shall be visually checked for any missing/damaged parts or defects in erection. These defects/missing parts shall be made good.

b) The crane after erection will have dimensions within the tolerances enumerated earlier.

c) Deflection test, insulation test, performance test and overload test:

These tests shall be done as enumerated in IS 3177-1999. However, there would be no permanent set in the structures after the removal of the 125 % overload. The tolerance on the lowering speed may be +20% of the specified hoisting speed instead of +10% of hoisting speed specified in IS: 3177-1999.

d) The representative of supplier shall be present at site during testing and commissioning of the crane and any defect/deficiency pointed out by the Purchaser shall be made good by supplier free of cost.

- Painting and erection procedure shall be as specified elsewhere in the GTS.

Structural Design

01) **SGUS/SGEOT Cranes**

- The crane structure shall be designed in accordance with the latest revision of IS:807.
- The bridge girder shall consist of main and an auxiliary structure where necessary.
- End-carriages shall be fabricated from rolled steel sections or plates, or both, welded together to form a box.
- End-carriages shall be of ample strength to resist all stresses likely to be imposed on them under severe conditions, including collision with other cranes or stops. The length of the end-carriage shall be such that no other part of the crane is damaged in collision.
- The end-carriage shall be fitted with safety stops to prevent the crane from falling more than 25 mm in the event of breakage of a track wheel or axle. Suitable jacking pads shall be provided on each end-carriage for jacking up the crane while changing track wheels.
- For single girder EOT cranes with central L.T. drive, full length M.S. chequered plate platform shall be provided along the bridge girder for mounting and access to long travel drive, current collection system, control panels, etc. A clear head-room of minimum 2000 mm shall be made available over the top of platform from the bottom cord of the roof truss.
- Black bolts shall not be used in the load bearing structures of the crane. Also high

© 2022 MECON Limited All rights reserved

tensile friction grip bolts shall not be used unless approved by the Employer.

- Bolts used in shear shall be fitted into reamed holes.
- Transverse fillet welding on the load carrying members shall be avoided.
- All butt welds on structural members, subject to tensile stress, shall be x-rayed.
- Plates, bars, angles and where practicable, other rolled sections used in the load bearing members of the structure shall not be less than 6 mm thick.

- Steel sections and plates, used for construction shall be of the latest revision of IS: 2062 quality.

02) **Column/Pillar Mounted Jib Cranes and Cantilever Cranes**

- The cranes shall be designed in accordance with IS: 807 for the jib column and jib arm of the crane.

- The structural steel material for the jib/cantilever crane structure shall confirm to IS: 2062-2006 and IS 8500-1991.

- The boom of the cranes shall be from section or fabricated type with rolled section or tubular sections.

- The design of the boom shall be such that the vertical deflection caused by the maximum rated load with the hoist at maximum jib radius position on the boom, shall not exceed 1/250 of the boom length.

- The column of the crane shall be made of heavy duty steel tube or fabricated/ lattice structure to ensure minimum deflection at full load. Proper bearing housing block, for housing required bearing for supporting the boom, shall be provided at the top or at suitable locations.

- The Jib arm support bearing will be either anti-friction ball roller bearing (or bush type bearing) as per design/client's requirement.

- Base plate of the column should be provided with drilled holes of appropriate size for fixing of jib crane on the foundation and bolts.

- The foundation bolts shall be so designed that that 50% of the bolt provided are capable of taking full load of the jib crane turning moment with impact.

- The design of column and boom of self supported jib crane shall be such that overall deflection of the jib crane does not exceed the limit of (boom length+ Column height)/ 300 when the hoist along with load is at extreme boom radius

- The connection between the boom and the pillar shall be designed suitably to give proper end fixing to the boom and to ensure that they play between moving

© 2022 MECON Limited All rights reserved

member is kept to the minimum.

- Cantilever crane shall be either single jib arm/boom or double jib arm as per the technological requirement.
  Jib arm shall be fabricated from standard "I" beam with vertical angle truss to reduce deflection. End carriage shall be constructed from channel beam. The Jib arm and end carriage shall also be fabricated from plates as per the requirement. Single Jib arm cantilever crane shall be provided with suitable capacity Electric Hoist whereas Double Jib arm Cantilever crane shall be provided with trolley/crab. The Arm of the crane shall be rigidly fixed with end carriage and strut of upper and lower horizontal guide roller frame.

- Top-running end trucks include double-flanged crane wheels made from forged steel for long service life

- Jib boom is fabricated from standard "S" beam with vertical angle truss to reduce deflection; jib boom and truss bolt onto the back frame—no welding needed
- End trucks are constructed from channel beam frames and resist twisting; the end trucks are jig-fixed for optimal fit and travel. End trucks bolt onto the jib's back frame
- Top-running end trucks include double-flanged crane wheels made from forged steel for long service life
- Crane drive has an electric motor with worm gear reducer
- Horizontal guide rollers for swivelling motion of jib crane as well as LT motion of Cantilever cranes shall be C55Mn75 alloy steel with a minimum hardness of 300 BHN.
- Match mark shall be provided on each part of the structure to facilitate erection and alignment of the crane at site.

Mechanical Equipment

a.**Design of Mechanisms**

Each mechanism of the crane shall be modular in construction with built in facilities for easy dismantling and maintenance of each assembly as an independent unit.

b. **Rope Drums**

Rope drum shall be of cast steel or fabricated out of rolled steel plates. Fabricated rope drum shall be stress relieved before machining.The rope drum shall preferably have left and right hand deep groove for low abrasion and true vertical lift and shall be sufficiently long to accommodate in one layer the length of rope requisite for the specified lift & in addition not fewer than two turns at each anchored end & one spare groove at the opposite end.

© 2022 MECON Limited All rights reserved

c.**Wire Rope**

The wire ropes shall be regular right hand lay hemp cores as per IS: 2266/1989. However, ropes working under water and in corrosive atmosphere shall be galvanized and shall have steel core. For rope arrangement with 2 falls, wire rope shall be of non-spinning type.

d. **Rope Guides**

Suitably designed rope guides with pressure ring/ rope tightener shall be provided for each lead of rope from the rope drum to prevent the rope from overriding, loosening or rope coming off the groove.

e.**Rope sheaves**

For cranes in steel plants, material shall be either CS/MS. Bottom block sheaves shall be provided with suitable guards to retain the rope in the sheave groove. Equalizer sheave/ bar shall be arranged to turn and swivel to maintain rope alignment under all circumstances.

f. **Wheels**

For single girder EOT cranes, the wheels for long travel motion shall be double flanged with straight tread. The width of wheel tread shall be greater than the rail head by 30 mm. For under slung cranes hoists block, the wheels shall be single flanged with straight/ taper tread to suit the track beams. Minimum diameter of the LT wheels for S.G. EOT cranes shall be 320 mm and 150 mm for CT wheels. However, in case of steel plant duty cranes the combination of wheel diameter and rail size shall be ensured. Wheels shall be of forged/ rolled/ cast steel with minimum hardness of 200 BHN in case of single girder under slung cranes running on rolled steel joist and 300 BHN for EOT cranes and for under slung cranes/ hoists running on wear resistant flats welded to rolled steel joists. Minimum diameter of LT and CT wheels for under slung cranes shall be 200 mm and 150mm respectively.

g. **Long Travel Drive**

i). For Single girder EOT Cranes

Individual wheel drive (one wheel in each end-carriage) shall be provided when the crane span exceeds 13 meters. All parts of the long travel drive shall be located above the platform and easily accessible. The gear-box mounted on platform with foot mounted motor and brake shall be connected with driving wheel by means of floating shaft and flexible geared coupling. The use of open gearing, chain and sprocket, pulley and belt etc. is not permitted.

© 2022 MECON Limited All rights reserved

ii). For under Slung Cranes

Dual drive arrangement located at either end of each end carriage shall be provided. Flange mounted geared motors may also be used.

iii) For Cantilever Cranes

Individual wheel drive shall be provided for cantilever cranes. LT wheels shall be double flanged mounted in anti-friction roller bearing housed in 'L' shaped bearing brackets for easy removal during maintenance. Upper and lower horizontal guide rollers of LT drive shall be C55Mn75 alloy steel with a minimum hardness of 300 BHN

iv) Slew Mechanism for Jib cranes.

Slew drive shall be either manual or motorized electrical as per the Purchaser's requirement.

Motorized slew drive mechanism shall consist of electrical motor connected with suitable gearbox by means of fluid/flexible coupling to take care of overriding. Suitable capacity brake shall be provided on the input side or extension shaft of gearbox. In addition to end stopper, suitable limit switch shall be provided in order to restrict the angle of rotation of the jib. Motorized slew drive shall be controlled from pendent push button system.

h. **Hoist and Cross-Travel Drive**

In case of SG EOT/ US crane, Jib and Cantilever crane with electric hoist , hoist and cross travel motions shall be combined in one block which shall be designed as per IS:3938-1983.

The electric hoist shall run on two or more pairs of wheels, a pair of which shall be driven by motor, through reduction gear.

The wheels shall be of cast steel/forged steel, single flanged with taper/parallel treads to suit to the crane girder/ Jib arm. The wheels shall be mounted on anti-friction bearings & shall be easily removable for repair & replacement. The wheel dia. shall be selected such that skidding does not take place even under unloaded condition.

.

The hoist mechanism shall consist of a bottom block fitted with a standard forged swivel hook of the specified capacity, supported on wire rope/ chain. The hoist drum shall be motor driven through gears enclosed in oil filled reduction gearbox.

In case of cantilever crane with double Jib Arm, CT and hoist mechanism shall be through trolley/crab similar to DG EOT crane.

i. **Gearing and Gear-boxes**

© 2022 MECON Limited All rights reserved

Straight and helical spur gearing in metric module shall be used for all motions. Worm gearing shall not be used. All gears shall be of hardened and tempered alloy steel with machine cut teeth. Hardness for pinion shall be 220 BHN and for gears it shall be 200 BHN. All gearings shall be enclosed in oil tight gear-boxes. Fabricated gear-boxes shall be stress relieved before machining.

j. **Bearings and Bearing Housing**

Ball and roller anti-friction bearings shall be used throughout unless otherwise specified. Anti-friction spherical roller bearings shall be provided for live axles of travel wheels. Housings shall be split on shaft centre line to permit removal of the shaft. The underside of the base of each bearing pedestal shall be machined and shall bear upon a machined surface. Due allowance shall be made for impact and side thrust while selection of bearings. Wherever necessary, spherical seating type separate thrust bearings of suitable dimensions shall be used. Life of ball & roller anti-friction bearings shall be calculated in accordance with manufacturer's recommendations and based on equivalent running time. The bearings used shall be of reputed make only

k. **Motors/ Couplings**

For Hoists of capacity 5 T and above, the motor (Foot mounted B3 type) shall be connected to its gear drive by a flexible coupling. Flange mounted motors (B5) may be used for Hoists of capacity below 5T and also for all CT/ LT individual drives. In case of single motor central drive for LT motion, foot mounted B3 type motors shall be connected to its gear drive by a flexible coupling.
The minimum no of poles for the motors shall be as given below:-

	Hoist motion	**CT motion**	**LT motion**
For SG EOT/SG US/ Jib and Cantilever crane	**6**	**4**	**4**

Flexible coupling shall be used between the LT motor and gear-box and between gear-box out put shaft and wheel shaft.

Half-geared couplings with floating shaft shall be provided between the wheel and the line shaft.

In case of Jib/Cantilever crane each motor shall be connected to its gear drive by a flexible coupling. All couplings shall be cast, wrought or from forged steel, tooth portion to be heat treated to hardened HB 241-280 and also shall be designed to suit the maximum torque that may be developed.

© 2022 MECON Limited All rights reserved

Alignment shall be such that solid couplings mate accurately. Flexible/ fluid couplings shall be initially aligned with the same accuracy as the solid couplings.

Flexible couplings of fail safe type shall be fitted between motor shaft and gearbox extension shaft of electric hoist.

l. **Shaft and Keys**

Shaft and axle shall have ample strength and rigidity and adequate bearing surface. They shall be finished smoothly and shall be provided with fillets of as large a radius as possible and/or be suitably tapered. All shafts shall be made of suitable quality of steel as recommended in IS:3177. Keys, key ways and splines shall be either involute or straight sided and shall conform to the relevant Indian Standards. Keys shall be so fitted and secured that they cannot work loose in service.

m. **Lubrication**

All gears & bearings shall be lubricated either by splash lubrication or by grease. If possible, all the lubricating points shall be grouped together in easily accessible positions

n. **Hook Blocks**

Hook blocks shall be of enclosed type leaving openings for ropes only so that ropes do not run off the sheaves. Standard swivelling shank hooks, mounted on thrust bearings shall be used unless otherwise specified. The hooks shall confirm to IS: 15560-2005/ IPSS.

o. **Brakes**

DC Electro-magnetic shoe brakes shall be provided for hoist motion of 5T or more Capacity. For hoist motion of less than 5T Capacity, DC disc brakes may be used. For LT, CT and slew motions (in case of Jib cranes), DC disc brakes shall be used.

Electro-magnetic brakes shall be provided for each motion on the high speed pinion shaft of the gear-train. Brakes shall be capable of bringing the fully loaded crane hoist safely to rest in shortest possible time with least possible shock and shall arrest the motion under all service condition. D.C. Spring for electro magnetic brakes shall be the compression type and shall not be stressed in excess of 80 % of the torsional elastic limit of the material.

© 2022 MECON Limited All rights reserved

Wearing surface of all the brake drums shall be machined and shall be cylindrical, smooth and free from defects. Brake lining shall be effectively and permanently secured the brake shoe during the effective life of the lining.

p. **Buffers**

The crane shall be provided with rubber buffers on the four corners (two in case of cantilever cranes) of the end-carriages unless otherwise specified. For electrically operated hoists, steel stops at all the four ends of the track beam shall be provided.

DOCUMENTATION

i) **Drawings and documents to be submitted by the Bidder with Tender**

The Bidder shall submit adequate sets of following technical drawings & technical data/ information with tender for cranes without which the tender shall be considered as incomplete & may not be considered for acceptance.

a. General Arrangement drawings of cranes/ hoists / attachments & signed copies of Clearance diagram.
b. Duly filled in questionnaire.
c. List of commissioning spares.
d. List of spares for two (2) years normal operation and maintenance with item wise price.
e. List of maintenance tools and tackles.

ii) **List of Drawing/ Documents to be furnished by the Successful Bidder for approval / reference**

a. General Arrangement drawings of cranes/ hoists / attachments & signed copies of Clearance diagram.
b. Electrical Single Line Diagrams
c. Quality assurance plan for inspection.
d. Specification of oils and lubricants and other consumables and their quantity and frequency of change.
e. Detailed layout plan and sections for power supply system. (Angle Bus bar/Shrouded Bus Bar/ Festoon Cable etc.)
f. DSL / Trolley line arrangement layout.

iii) **List of Drawings/ Documents to be furnished along with equipment by the Successful Bidder**

a. Requisite no. of sets of all GA drawings, complete assembly and sub assembly drawings of the equipment. (two sets and one reproducible and/or two sets of catalogues and soft copy).

© 2022 MECON Limited All rights reserved

b. Drawing of all equipment/ component received from sub supplier. (two sets and one reproducible and/or two sets of catalogues and soft copy).
c. Engineering and design calculations.
d. Test and warranty certificate for each item of equipment.
e. Detailed erection schedule and manuals, assembly/ erection drawings, erection sequence, special precautions to be followed during assembly/ erection (these shall be despatched three months prior to FOT/FOR delivery).
f. Test reports and inspection reports.
g. Instruction manuals for testing and commissioning.
h. Operation, maintenance and safety manuals.
i. Requirement of special tools and tackles, if any, for subsequent maintenance.
j. Detail drawing and specifications of all wearing out parts and parts subject to breakage during normal operating conditions (two sets and one reproducible and/or two sets of catalogues and soft copy).
k. List of spare parts with drawings, sketches, specifications and manufacturer's catalogue (two sets and one reproducible and/ or two sets of catalogues and soft copy)
l. All other drawings and documents as stipulated in General Conditions of Contract.

iv) **QUESTIONNAIRE (To be filled in for each crane and shall be submitted along with Tender)**

a) **SG EOT/US CRANE**

i/ Crane No. :
ii/ Nos. off :
iii/ Type of crane :
iv/ Capacity (t) :
v/ Span (m) :
vi/ Duty class :
vii/ Location :
viii/ **Hoists**
a) Speed with safe working load, m/min :
b) No. of rope falls supporting the load and specification of rope :
c) Lift of hook above floor, m :
d) Drop of hook below floor, m :
e) kW of motor at specified rating :
f) RPM of motor :
g) Make, type and size of brake :
ix/ **Cross - travel**
a) Speed with working load, m/min :
b) Wheel base, mm :
c) No. of wheels :
d) kW of motor at specified speed :

© 2022 MECON Limited All rights reserved

e) RPM of motor :
f) Make, type and size of brake :

x/ **Bridge**
a) Speed with safe working load, m/min :
b) Wheel base, mm :
c) No. of wheel on each end-carriage :
d) Diameter of wheel, mm :
e) Maximum wheel load, kg :
f) No. of motors :
g) kW of motor at specified rating :
h) RPM of motor :
i) Make, type and size of brake :

xi/ Power supply :
xii/ Control voltage :
xiii/ Made and type of control :
xiv/ Total weight of crane, t :
xv/ Total weight of hoist, t :
xvi/ Break-up of crane weight, t :
a) Structural :
b) Mechanical :
c) Electrical :
xvii/ General arrangement drawing showing details as enumerated :
xviii/ List of deviations from the Employer's Specification.

b) For Jib & Cantilever Cranes

i. Type of Crane
ii. Capacity
iii. Operating Speed:
a. Hoist b) Cross Travel c) Slew
iv) Jib outreach/radius:
v. Type of Hook
vi. Total height of lift
vii. Wire Rope
Dia, Construction, core, tensile designation, Min. breaking strength, no. of falls, F.O.S, make etc.
viii. Type of Brakes
a) Hoist b) Travel : c) Slew
ix. Motor's details (type, kW, Pole, %CDF, no. of start/Hr, Duty, POT, Insulation & enclosure class, qty, Make etc.)
a) Hoist
b) Travel
c) Slew
x. Power supply
xi. Control voltage

© 2022 MECON Limited All rights reserved

xii. Made and type of control
xiii. Break-up of crane weight, t
  a) Structural
  b) Mechanical
  c) Electrical

© 2022 MECON Limited All rights reserved

03. ELECTRIC HOIST

Scope of Work:

The scope of work of the Bidder shall consist of design, manufacture, inspection, assembly, and painting at manufacturer's shop as well as at site after erection, supply and transportation to site, unloading and re-conservation at site, erection testing, commissioning and performance guarantee of Electric hoist of various capacity.

The scope of work of the Contractor shall also include the following:

i) Supply of Power Supply System to the Hoists by means of flexible festoon cable system suitable for 415V, 3 Phase, 4 wire, 50 Hz. Absolute sum of combine variation in voltage & frequency shall be 10%. Power supply shall be provided by the Purchaser at the main disconnecting switch located near the fixed end of festoon cable. From this switch power to be taken to the Contractor's control/ power panel for hoist operation by the Bidder.

In case of excessive travel and bend, suitable numbers of power sockets shall be provided in the building and Bidder has to supply plug socket of adequate rating to match the same.

ii) Erection and commissioning of the flexible festoon trailing cable for power supply to electric hoists.

iii) Supply of requisite quantity of paints and paint accessories of specified quality and approved make & shade for painting of Electric Hoists after erection at site.

iv) Supply of all consumable materials like lubricants, grease etc. as required for initial filling as well as replenishment during erection, testing and commissioning of the Electric Wire Rope Hoist at site, without extra cost..

v) Supply of all and any spares required for successful commissioning and for operation/ maintenance during one year warranty period after successful commissioning of the EWRH. Commissioning spares shall be supplied along with the equipment. A list of such commissioning spares shall be furnished separately along with the Bidder..

vi) Supply of spares for two (2) years normal operation and maintenance of the equipment. A list of such spares shall also be furnished along with the Bidder with item wise price schedule.

© 2022 MECON Limited All rights reserved

vii) Supply of maintenance tools and tackles with tool box for normal maintenance of the electric hoists. A list of maintenance tools and tackles shall be furnished along with the tender. The price of same shall be included on the price of EWRH(s) itself.

viii) The Tenderer shall also render all assistance to the Purchaser in obtaining statutory clearance, if any from the concerned statutory authorities of that region

ix) Supply of drawings and documents

TECHNICAL SPECIFICATION

General

a) **Codes and Standards**

The design, materials, construction, manufacture, inspection, testing and performance of electrically operated hoist shall comply with all currently applicable statutes, regulations and safety codes in the locality where the equipment is to be installed. The equipment shall also conform to the latest applicable Indian or equivalent standards. Other international standards are also acceptable, if these are established to be equal or superior to the listed standards. Nothing in this specification shall be construed to relieve the Contractor of this responsibility.

The hoist shall be designed in accordance with the latest edition of IS-3938-1983 and all other relevant Standards subject to any modifications and requirements specified hereinafter

b) For outdoor hoists, motors, brakes & other equipment shall be covered to suit to outdoor operations.

c) All trailing cables shall be clamped with PVC or non-metallic clamps.

d) Defects in the materials like fractures, cracks, blowholes or laminations are not allowed.

e) No cast iron parts shall be used except for electrical equipments and no wood or combustible material shall be used unless specifically mentioned otherwise.

f) All working parts requiring replacements or inspection or lubrication shall be easily accessible without the need for dismantling of other equipment or structure.

g) All bolts except those with nyloc nuts shall be provided with grip lock nuts or spring washer.

h) All parts of the hoist shall be thoroughly cleaned of all loose mill scales, rust or foreign matter & then painted as specified. All parts inaccessible after assembly shall be painted before assembly & assembled while paint is still wet.

© 2022 MECON Limited All rights reserved

i) Painting and erection procedure shall be as specified elsewhere in the GTS.

Construction Features

Electrically operated hoist shall be a complete unit with travelling trolley, hoisting motor, travel motor, rope drum, wire rope, necessary gearing, sheaves, brakes, hook, pendent push button station, contactor panel, all wiring, conductor for travel motion, limit switches, end stops, buffers, earthing terminals and other accessories to make the equipment complete in all respects. Electrically operated hoist shall have minimum factor of safety as five (5).

Travelling Trolley

The travelling trolley shall be motor driven. Trolley frames shall be fabricated from rolled structural steel sections. The side plates of the trolley shall extend beyond wheel flanges, thus providing bumper protection for the wheels. The two side plates shall be connected by means of an equalising pin. The wheels shall be machined on their treads to match the profile of the monorail.

Wheel & drive

The electric hoist shall run on two or more pairs of wheels, a pair of which shall be driven by motor, through reduction gear. The wheels shall be of cast steel/forged steel, single flanged with taper/parallel treads to suit to monorail. The wheels shall be mounted on anti-friction bearings & shall be easily removable for repair & replacement. The wheel dia. shall be selected such that skidding does not take place even under unloaded condition.

Rope Drum

Rope drum shall be as per IS 3938. Rope drum shall be either cast or welded to sustain concentrated loads resulting from rope pull. Drum shall be machine grooved right and left with grooves of a proper shape for the rope used. Grooving shall be of proper length to handle entire rope required to make the specified lift plus the two dead laps at each anchor point, without overlapping.

Wire Ropes

Wire ropes shall be extra flexible with well lubricated hemp core having six (6) strands of thirty-seven (37) or thirty-six (36) wires per strand with ultimate tensile strength of 1770 N/mm^2. Wire ropes shall be of Right Hand Ordinary (RHO) lay construction. The rope shall be fastened to the drum with an attachment having strength equal to that of the rope. The rope fastening at the swinging end shall be aligned so as to prevent rope coming off its reeving. Rope shall be of sufficient length so that two (2) full laps shall remain on the drum at extreme low position of the hook. Reverse bends or cross bends and bird caging shall be avoided. The breaking loads for the hoist ropes shall not be less than the factor specified in IS 3938. The load shall include rated load on hooks, weight of the bottom block and the weight of rope. The

© 2022 MECON Limited All rights reserved

hoisting rope, unless otherwise specified or agreed to by the purchaser, shall comply with IS: 2266-2002.

Sheaves

Sheaves shall be as per IS 3938. These shall be equipped with anti-friction bearings and shall be fully guarded to prevent the rope coming off. Equalising sheaves, if provided, shall also be as per IS 3938. Grooves shall be machined to proper shape for the rope used.

Gears

Gears shall be forged steel blanks or shall be of stress-relieved welded steel construction or built-up from steel billets and welded together to form a one piece gear section. Pinions shall be of forged carbon or heat-treated alloy steel. All gears and pinions shall be totally enclosed type upto last stage of reduction in all motions and shall be carried in fabricated steel gear boxes which shall be dust proof and firmly sealed to prevent oil leakages.

Bearings

Bearings may be ball or roller type. All anti-friction bearings shall be of proven make. The design shall be such that there is no ingress of dust and oil or grease does not leak out. Bearings shall have a minimum life expectancy of 10,000 working hours.

Shafts and Axles

Shafts and axles shall be of forged steel and shall have ample strength, rigidity and adequate bearing surface for intended duties. Shafts and axles shall be accurately machined and properly supported. Shafts shall, as far as possible, be furnished straight. If shouldered, these shall be provided with fillets of ample radius or shall be tapered to avoid loss of strength and stress concentration. These shall be designed considering allowances for keys and splines.

Brakes

All brakes shall be of ‘fail-safe’ design and shall operate automatically in case of power failure. Each of the trolley and hoisting motors shall be equipped with electrically released, spring set, friction shoe type brakes. Hoisting brake shall be designed to hold 1.5 times full load torque while trolley travel brake shall be designed to hold 1.25 times full load torque. All brakes shall have weather-proof enclosures. Coupling halves shall not be used as brake drums.

DC Electro-magnetic shoe brakes shall be provided for hoist motion of 5T or more Capacity. For hoist motion of less than 5T Capacity, DC disc brakes may be used. For CT motion, DC disc brakes shall be used.

© 2022 MECON Limited All rights reserved

Lifting Hook

The lifting hook shall be single hook type, solid, forged, heat treated, of rugged construction and provided with a standard depress type safety latch. Lifting hook shall have swivels and operate on ball or roller thrust bearings with hardened races. Lock to prevent hook from swivelling shall be provided. The hook shall confirm to IS:15560-2005.

Buffers, Stops and Sweeps

01. Spring or rubber buffers shall be provided on the trolley. Suitable end stops shall be provided which shall be welded on the ends of monorail to contact the buffers mounted on the trolley.

02. Trolley wheel stops shall be provided before the end stops. These shall match to wheel radius. Stops to prevent trolley from running off the monorail shall be abutted against ends of monorail. Stops shall be welded to the monorail.

03. Sweeps shall be attached to the trolley to remove foreign material from the rails.

Guards

01 All exposed couplings, shafts, gear wheels, pinions, drives etc. shall be safely encased and guarded.

02 The sheaves of hook blocks shall be guarded to prevent trapping of hand between a sheave and the in-running rope.

Mechanical details

01. **Hoist mechanism**

The hoist mechanism shall consist of a bottom block fitted with a standard forged swivel hook of the specified capacity, supported on 2 or 4 falls of wire rope. However, non-spinning type of wire rope shall be used for 2 falls rope arrangement. The wire rope shall be wound on a grooved drum which shall be sufficiently long to accommodate in one layer the length of rope requisite for the specified lift & in addition not fewer than two turns at each anchored end & one spare groove at the opposite end.

© 2022 MECON Limited All rights reserved

The rope drum shall preferably have left and right hand/ deep grooves for low abrasion and true vertical lift. The hoist drum shall be motor driven through gears enclosed in oil filled reduction gearbox.

02. **Gearing**

Straight & helical spur gearing shall be used for all motions. Worm & bevel gears shall not be used without specific permission from Employer. Preferably all first reduction gears shall have single helical teeth. All gears shall be hardened & tempered alloy or carbon steel with machine out teeth. Surface hardening of teeth is not acceptable. All gears shall be enclosed in oil filled gear box except when not possible.

03. **Motors/ Couplings**

For Hoists of capacity 5 T & above, the motor (Foot mounted B3 type) shall be connected to its gear drive by a flexible coupling. Flange mounted motors (B5) may be used for Hoists of capacity below 5T and also for traverse drive of hoists.

04. **Lubrication**

All gears & bearings shall be lubricated either by splash lubrication or by grease. If possible, all the lubricating points shall be grouped together in easily accessible positions.

05. The Electric hoists shall be inspected and tested as per IS: 3938 - 1983 and as specified in GCC.

DOCUMENTATION

1. Drawings and documents to be submitted by the Bidder with Tender

The Bidder shall submit adequate sets of following technical drawings & technical data/ information with tender for cranes without which the tender shall be considered as incomplete & may not be considered for acceptance.

a) General arrangement drawings/ Clearance diagram of the Hoist with all technical parameters & details.
b) Duly filled in questionnaire.
c) List of commissioning spares
d) List of spares for two years normal operation and maintenance of each hoist.
e) List of special/maintenance tools and tackles.

2. List of Drawing/ Documents to be furnished by the Successful Bidder for approval / reference

© 2022 MECON Limited All rights reserved

a) General arrangement drawing of equipment showing full details in plan, elevation and sections.
b) Motor kW, brake, wire rope, wheel and rope drum selection calculations.
c) Quality assurance plan for inspection.
d) Specification of oils and lubricants and other consumables and their quantity and frequency of change (reference)
e) Detailed layout plan and sections for power supply system.

3. List of Drawings/ Documents to be furnished along with equipment by the Successful Bidder

a) GA drawings, complete assembly and sub assembly drawings of the equipment. (two sets and one reproducible and/or two sets of catalogues and soft copy).
b) Engineering and design calculations. (two sets and one reproducible and/or two sets of catalogues and soft copy).
c) Test and warranty certificate for each item of equipment.
d) Test reports and inspection reports.
e) Instruction manuals for testing and commissioning.
f) Operation, maintenance and safety manuals.
g) Requirement of special tools and tackles, if any, for subsequent maintenance.
h) All other drawings and documents as stipulated in General Conditions of Contract.

QUESTIONNAIRE (ELECTRIC HOIST)

01 General

Item number :
Location :
Capacity :
Duty classification :
Total weight of hoist :
Make :

02 Hoist

- Speeds with safe working load :

- Lifting height
  a) Above floor level :
  b) Below floor level :

- Wire ropes
  a) Type of construction :
  b) Size :
  c) Number of falls :
  d) Factor of safety :

© 2022 MECON Limited All rights reserved

- Rope drum :
  a) Materials :
  b) Diameter :

- Drives
  a) Type & material of gear box :
  b) Gear & pinion :
  c) Material & hardness :

- Motors
  a) Type & number :
  b) Kw rating :
  c) Synchronous speed :
  d) Class of insulation :
  e) Pull out torque :
  f) Frame size :

- Brakes :
  a) Type :
  b) Size :
  c) Torque rating :

- Type & details of limit switches :
- Type of couplings :
- Type of bearings :

- Lifting hook
  a) Type :
  b) Material :

- Type & details of control :

03 Trolley

- Speed with safe working load :

- Wheels
  a) Numbers :
  b) Diameter :
  c) Material & hardness :
  d) Max. wheel load :
  e) Wheel base :

- Drive

© 2022 MECON Limited All rights reserved

a) Type & material of gear box :
b) Gears & pinions :
c) Material & hardness :
d) Kw rating :
e) Synchronous speed :
f) Class of insulation :
g) Pull out torque :
i) Frame size :

- Brakes
  a) Type :
  b) Size :
  c) Torque rating :

- Type & details of limit switches :
- Type of coupling :
- Type of bearings :
- Type & details of controls :

04 Clearance diagram indicating the basic dimensions :
05 Type & lubrication provided :
06 Type & size of cables :
07 Location & control details of hoist block power feeding arrangement :

© 2022 MECON Limited All rights reserved

04. HAND OPERATED TRAVELLING CRANE

Scope of Work:

The scope of work of the Bidder includes design, engineering, manufacturers, assembly, shop test, painting at manufacturer's shop as well as at site after erection, supply including dismantling for transportation, packing, loading and transportation to site, receipt, unloading, storage and re-conservations at site, erection, testing and commissioning of Hand Operated Travelling Cranes of various capacity and span and as per agreed Technical Parameters between Purchaser & Bidder..

Scope of work of the Bidder shall also include the following:

- Supply of required quantity of initial fill of grease, lubricants, hydraulic fluids and other consumables which are necessary for clearing, flushing including erection, testing and commissioning.
- Supply of necessary tools & tackles including toolbox, spares required for erection, testing & commissioning. A list of such items shall be furnished along with the offer. .
- Supply of spares for two years trouble free operation of each of the crane. List of such spares along with item wise price shall be furnished by the bidder.
- The supply include necessary attachments as required.
- Supply of drawings and documents as asked for.

Technical Specification.

01. **General:**

- The chain pulley block and travelling trolley used in the crane shall conform to IS: 3832-2005 & IPSS: 1-07-004-92.
- The cranes shall also conform to various safety codes.
- Ball & roller anti-friction bearings only shall be used in the crane wherever required.

© 2022 MECON Limited All rights reserved

- Swiveling type standard shank hook mounted on grease lubricated anti-friction thrust bearing shall be used. The hooks shall conform to IS 15560. It shall be forged from steel.

- Load chain & operating chain shall be as per relevant I.S. & the same shall be of calibrated type.

- Pulley used for the operating mechanism shall have suitable guards to prevent the operating chain from coming out.

- All the open gearings shall have suitable cover.

- No-load testing shall be done at works after full assembly in presence of Purchaser. The crane shall be load tested at site after erection.

- No wooden parts or cast iron parts shall be used on the crane.

- All butt welds on structural members subjected tensile stress shall be X-rayed.

- Travelling speed, tractive efforts & bill of materials shall be indicated by the party during approval of drawing and shall be subject to Purchaser's approval.

- The crane shall be inspected at works by Purchaser or by his representative prior to despatch of the crane as per mutually agreed procedure (which will be finalized before placement of order).

Painting and erection procedure shall be as specified elsewhere in the GTS.

02. **Codes and standards**:

- The design, manufacture and performance of HOT crane along with manual hoist and Geared trolley shall comply with all currently applicable status, regulations and safety codes and shall also confirm to the latest applicable Indian or International standards
.
- The hoist block shall conform to class-2 duty as per IS:3832-2005

All other features of Manual Travelling Hoist (Chain Pulley Block with Geared Trolley) shall be in accordance with stipulation under Technical Specification of Manual Hoist.

- The crane structures shall be designed Manufactured and tested in accordance with IS: 807-2006.

© 2022 MECON Limited All rights reserved

- Black bolts shall not be used in the load bearing structures of the crane. Also high tensile friction grip bolts shall not be used unless approved by purchaser.
- Traverse fillet welding on the load carrying members shall be avoided.
- All but welds on the structural members, subject to tensile stress, shall be X-rayed.
- Maximum deflection of the bridge girder of Hand Operated Travelling crane with safe working load on the travelling hoist shall not exceed 1/900 of the span of crane with travelling hoist stationed at mid span and excluding deflection due to dead load.
- Hand operated travelling crane shall be supplied complete with buffer & buffer stops.
- The HOT crane after installation at site shall be load tested as per IS:807-2005 .

DOCUMENTATION

1. Drawings/ Documents to be submitted with the tender.

The Bidder shall submit the following technical drawings & technical data/ information with tender for manual hoist with traveling trolley, without which the tender shall be considered as incomplete & may not be considered for acceptance.

a) Typical General arrangement drawings & catalogues.
b) The questionnaire filled in.
c) List of commissioning spares
d) List of spares for 2 years normal operation and maintenance of crane
e) List of maintenance tools and tackles.

2. Final drawings/documents to be furnished along with the equipment:

a) General Arrangement drawings and all data /catalogues with soft copy.
b) Supply of report on shop tests and material test certificate.
c) Supply of all operating manual, maintenance schedule & lubrication chart.

Questionnaire

Questionnaire (to be furnish for each equipment)

01. **Manual Hoist with Geared Trolley**

a) Manual Hoist (Chain Pulley Block)

1. Equipment No :

© 2022 MECON Limited All rights reserved

2. Type : Spur/Worm

3. Make :

4. Capacity (t) :

5. Duty Class :

6. Qty :

7. Height of Lift (m) :

8. Max. Tractive effort (Kgs) :

- Hoist :

9. Movement in 'm' corresponding to operating chain movement of 30m. :

- Hoist :

10. Total weight (Kgs.)

11. Material Specification

- Frame
- Hook
- Load Chain
- Hand Chain
- Hand Chain Wheel
- Load chain wheel
- Gears.

13. Type of brake provided

b) **Geared Trolley**

1. Type (Pushed/ Geared)

2. Make

3. Capacity

4. Material specification

- Frame
- Gears
- Pinion
- Hand Chain

© 2022 MECON Limited All rights reserved

- Hand Chain Wheel
- Trolley wheels
- Cross bolt
- Pin/ bolt

5. Minm . Radius of Curvature Recommended Track beam size :

6. Max. Tractive effort (Kgs) :

- Travel :

12. Movement in 'm' corresponding to operating chain movement of 30m. :

- Travel :

02. **CRANE DETAILS**

1. Equipment No. :
2. Capacity :
3. Span :
4. Quantity :
5. Height of Lift :
6. Class of Duty :
7. Over Buffer dimension :
8. Wheel base :
9. Head room :
10. Wheel dia (mm)
    - LT :
    - CT :
11. Max. Tractive effort (Kgs) :
    - Hoist :
    - Long Travel :
    - Cross Travel :
12. Movement in 'm'

© 2022 MECON Limited All rights reserved

corresponding to operating chain movement of 30m. :

- Hoist :
- Long Travel :
- Cross Travel :

13. Break up of crane weight :

- Structure :
- CPB :
- Geared Trolley :
- Total :

14. Type of lubrication :

© 2022 MECON Limited All rights reserved

05. MANUAL HOIST (With/Without Geared Trolley)

The **scope of work** of the Bidder shall consist of design, manufacture, inspection, assembly and painting at manufacturer's shop as well as at site after erection, supply and transportation to site, unloading and re-conservation at site, erection testing, commissioning & performance guarantee test of manual hoist with travelling trolley (Geared Trolley) of various capacity.

- Supply of hand operated travelling type chain pulley blocks shall consists of the following:
- Supply of hand operated travelling type chain pulley blocks complete in all respects with mechanical components and necessary attachments as required.
- Supply of initial requirements of consumables including replenishment during erection, testing & commissioning of chain pulley blocks.
- Supply of all commissioning spares .
- Supply of spares for 2 (two) years normal operation and maintenance for each type of hand operated travelling type chain pulley blocks.
- Supply of maintenance tools and tackles for each type of chain pulley blocks.
- Supply of required quantity of paints for intermediate, final coat and retouching.
- Supply of drawing and documents as listed herein.

Codes and standards

The design, materials, construction, manufacture, inspection, testing and performance of manually operated hoists shall comply with all currently applicable statutes, regulations and safety codes in the locality where the equipment is to be installed. The equipment shall also conform to the latest applicable Indian or equivalent standards. Nothing in this specification shall be construed to relieve the Main plant Package Contractor of this responsibility.

The Chain Pulley Block shall conform to class-II (M5) duty as per IS: 3832-2005

Features of construction

Manual hoists shall be complete with load chain, load chain wheel, hand chain, hand chain wheel, necessary gearing, brakes for hoisting, hooks and other accessories to make the equipment complete in all respects.

Load Chain and Load Chain Wheel

© 2022 MECON Limited All rights reserved

The total length of the load chain shall exceed the minimum length required to give the prescribed range of lift by not less than three links per fall to ensure that the slack end anchorage is not loaded. The load chain wheel shall be of adequate strength and shall be suitably designed to ensure effective operation of the chain and should be properly secured with shaft, preferably with splines. Load chain shall be calibrated type.

Hand Chain and Hand Chain Wheel

The length of the hand chain shall be such that the lowest point of the suspended loop shall hang 400 mm above the operating level. Hand chain wheels shall be provided with flanges and designed to ensure effective operation with hand chain. Hand chain shall be calibrated type.

Shafts and Axles

Shafts and axles shall have ample strength and rigidity and adequate bearing surface for the intended duties.

Gears

Gears shall be cut from solid cast or forged steel blanks or shall be of stress-relieved welded steel construction or built-up from steel billets and welded together to form a one piece gear section. All open gearing shall be suitably covered.

Pulleys

Pulleys used for operation mechanism shall have suitable guards to prevent the operating chain from coming out.

Brakes

Brakes shall be of automatic type that will stop and hold the load when hand-chain pull is released and shall permit controlled lowering of the load when hand-chain pull is applied in the lowering direction.

Pawls

Pawls shall be of sufficient strength to arrest the full load from lowering due to gravity. The pawl and ratchet wheel shall be of steel, hardened and tempered so as to attain required wear resistance and toughness.

Lifting Hook

Lifting hook shall be solid, forged, heat treated alloy or carbon steel of rugged construction and provided with a standard depress type safety latch. Lifting hook shall

© 2022 MECON Limited All rights reserved

have swivels and operate on grease lubricated ball or roller thrust bearings with hardened races. Lock to prevent the hook from swiveling shall be provided. Lifting hook shall confirm to IS:15560.

Manual Travelling Geared Trolley

The travelling trolley shall be manual driven. Trolley frames shall be fabricated from rolled structural steel sections. The side plates of the trolley shall extend beyond wheel flanges, thus providing bumper protection for the wheels. The two side plates shall be connected by means of an equalizing pin. The wheels shall be machined on their treads to match the profile of the monorail. The manual travelling trolley shall run on two or more pairs of wheels. The wheels shall be of cast steel/forged steel, single flanged with taper/parallel treads to suit to monorail. The wheels shall be mounted on anti-friction bearings & shall be easily removable for repair & replacement. The wheel dia. shall be selected such that skidding does not take place even under unloaded condition.

Trolley shall be manual driven with the help of gear /pinion and hand wheel & hand chain. . Bottom of hand chain loop shall be 400 mm from ground level

Pulley block and Trolley shall be separate unit for provision of hooking. Cross bolt of suitable material and size shall be provided in the trolley for the purpose.

© 2022 MECON Limited All rights reserved

DOCUMENTATION

1. Drawings/ Documents to be submitted with the tender.

The Bidder shall submit the following technical drawings & technical data/ information with tender for manual hoist with traveling trolley, without which the tender shall be considered as incomplete & may not be considered for acceptance.

a) Typical General arrangement drawings & catalogues of the hoist.
b) The questionnaire filled in.
f) List of commissioning spares
g) List of spares for 2 years normal operation and maintenance of crane
c) List of maintenance tools and tackle

2. Final drawings/documents to be furnished along with the equipment:

a) General Arrangement drawings and all data /catalogues.
b) Supply of report on shop tests and material test certificate.
c) Supply of all operating manual, maintenance schedule & lubrication chart.

Questionnaire

1. Equipment No. :
2. Capacity :
3. Quantity :
4. Height of Lift :
5. Class of Duty :
6. Make :
7. Min^{m}. Radius of Curvature of Track beam size :
8. Max. Tractive effort (Kgs)
   - Hoist :
   - Travel :
9. Movement in 'm' corresponding to operating chain movement of 30m.
   - Hoist :
   - Travel :

© 2022 MECON Limited All rights reserved

06. ELEVATOR

PASSENGER AND FREIGHT CUM PASSENGER ELEVATOR

SCOPE OF WORK

1. The scope of work of the Bidder includes design, engineering, manufacture, assembly, inspection and testing, painting at manufacturer's shop as well at site after erection, supply including dismantling for transportation, packing, forwarding, loading and transportation to site, receipt, unloading, storage and re-conservation at site, erection, testing, commissioning and performance guarantee of the elevators at site.

   The elevator shall be complete with car cage, counterweight, guides with their support, drive system consisting of motor, gear box, ropes, pulleys and drive base, limit switches, cage and hoist way door system, ARD, battery operated emergency light, alarm bell, complete electrics and control system, car and hoist bay illumination system, buffers, switches etc. and other necessary fixtures and accessories whether mentioned in this specification or not but necessary for successful installation, operation and maintenance of the elevator.

   The scope of work of the Successful Bidder shall also include the following:

   Bidder shall tap 415V, 3 phase, 50 HZ, 4 wire power supply from the nearest substation to the isolator/incomer of **lift panel** in the machine room . Scope of the Successful Tenderer includes complete wiring from point of power supply onwards for safe and satisfactory operation of the elevator.

   Obtaining statutory clearances from statutory authority.

   Supply of requisite quantity of paint and paint accessories of specified quality and of approved make and shade, for painting of the elevator after erection.

   The scope of work shall stand supplemented by this specification, the clearance diagram and general specification on quality system, inspection and test of plant & equipment at manufacturer's premises and other commercial terms & condition stipulated in the tender document.

   Supply of all and any spares needed for successful commissioning and for operation of 1 (one) year warranty period after successful commissioning of the elevators.

   Supply of initial requirement of oil, lubricants & cleaning/ flushing fluid including replenishment during erection, testing and commissioning along with 2 (two) years' operative spares, tools & tackles of the elevator.

© 2022 MECON Limited All rights reserved

All necessary minor civil, mechanical and electrical works connected with the design, manufacture, supply at site, storage at site, erection, painting, testing and commissioning of the elevator shall be included in the scope of work. However, lift well shall be constructed by Purchaser. Requirement of fixers for lift well with load data shall be furnished by the lift supplier.

Scope of work of the Successful Tenderer shall also include the maintenance of the elevators by their own men, machine and materials including spares and consumables for a period of 12 months after successful commissioning of the elevator.

Any special tools and tackles required for operation and maintenance of the elevator shall be included in the scope of supply of the bidder. A list of such tools and tackles shall be furnished by the Bidder..

Scaffolding required during elevator erection shall be arranged by the Lift supplier.

Supply of following drawings, documents and manuals.

Scope of work of the Tender shall also cover supply, erection testing and commissioning of all electrical items as covered under Electrical details of GTS..

TECHNICAL SPECIFICATION

1. Mechanical Details

The elevators shall conform to the following stipulations, in general:

a) The elevator shall be designed in accordance with IS: 14665 (Part I) Part – 2/Sec – 1, Part – 3/Sec – 1)2000 and IS : 14665 (Part 4/ Sec 1 to 9) 2001 and other relevant IS specifications and subject to any modifications and requirements specified herein after.

b) The elevator will be installed inside the building to facilitate movement of man and material to various floor levels and shall operate from lower most level to top most level and will be located at identified location.

c) The elevator shall be equipped with all standard safety systems such as alarm bell/hooter in case of power failure, Automatic Rescue Device (ARD), battery backup for ARD & Emergency lights, hand wheel connected with motor shaft for manual lowering of elevator to the nearest landing level in case of power failure and failure of ARD., limit switches, indicators, over speed safety governor for car , emergency light fittings, fire man switch etc.

d) Lift shaft is to be provided with adequate lighting.

© 2022 MECON Limited All rights reserved

e) The elevator shall be suitable for continuous 24 hours round-the-clock operation.

f) The motor for the elevator shall be squirrel cage induction motor with VVVF control for controlling the speed during starting and stopping at landings

g) Trouble-free performance of the elevator incorporating the operational, controlling and safety requirements, as specified, is to be guaranteed.

h) A selector switch and a set of push buttons shall be provided on the top above the ceiling of the car to operate the elevator locally for inspection and maintenance. The selector switch when set to position "Inspection" shall exclude control from other places and movement of the car in the desired direction shall be effected by the push buttons.

For normal operation of the elevator, the selector switch shall be set to the position working. It shall be possible to operate the elevator only when the appropriate button is kept in pressed condition.

i) Provision shall be made for a safety gear, which shall operate in case of free fall or over speeding of elevator car or counter weight in the descending direction. This safety gear, while freezing the cabin mechanically to the guides, shall also interrupt the control supply through a limit switch.

j) The particular landing door shall open only after the elevator car has stopped at the landing. Additional provision shall be made for opening of the landing door in case of emergency by means of a special key. The landing doors shall be so designed that their closing and opening is not likely to injure a person.

k) Provision shall be made to prevent the opening of any landing door when the car is passing that zone in response to a call from another landing.

l) At all the intermediate levels "Up" & "Down" call buttons with indicators shall be provided. Car position indicator shall also be provided at all levels. At ground level, "Up" call button with indicator & at top most level "Down" call button with indicator shall be provided.

m) The circuit which supplies current to the motor shall not be included in any twin or multi- core trailing cable used in connection with the control safety devices /signaling equipment.

n) Safe access for maintenance and removal of all mechanical and electrical parts shall be ensured, without additional scaffolding.

© 2022 MECON Limited All rights reserved

o) All parts requiring replacement or inspection or lubrication shall be easily accessible without the need for dismantling of other parts/equipment. All electrical cables shall be so laid that they are not liable to damage and can be easily inspected and maintained.

p) The elevator shall be equipped with fireman's switch at ground floor, emergency alarm switch in car and talk back system. The fireman's switch when operated shall bring the car to the ground floor and open the door in case of emergency. The emergency alarm switch shall be installed in the car and the alarm shall be installed at ground floor near the hallway door. When emergency alarm is operated it shall display an audio visual alarm alerting people outside.

The talk back system shall be provided to communicate with personnel at machine room with people inside the car.

q) For other details relevant BS standards shall be followed.

r) For Hazardous areas Elevator , all the electrical component shall be of flame/explosion proof enclosure suitable for Gas group IIA , IIB & IIC and Temperature class T1 to T4 confirming to IEC-60079- Part-0 & I) 2011.

All the explosion proof fittings etc shall have CMRI certificates and the serial nos. shall be punched on the items.

2. DESIGN CONSTRUCTION AND PERFORMANCE REQUIREMENT.

1) Wire Rope

The car and counter weight shall be suspended by steel wire ropes. The number of wire ropes and size of wire rope shall be so chosen that highest factor of safety is achieved as per standard. Not less than three independent suspension ropes shall be used. Lift Ropes shall be as per IS 2266 and IS 14665 (Part 4 / SEC 8)-2001. Round strand steel wires ropes made from steel wire ropes having a tensile strength not less than 12.5 tonnes /cm2 and of good flexibility shall be used for lift. Lubrications between the strands shall be achieved by providing impregnated hemp core. The lift ropes shall conform to IS 14665-(Part-4-Sec. 8):2001. The minimum diameter of rope for cars and counter weight of passenger and goods lift shall be 12mm and shall confirm to IS 14665 (Part 4/Sec.8):2001 including all amendments. The Factor of Safety based on Maximum Static Load for car & counter weight ropes shall be at least 12. Ropes shall be attached to dead end hitch assemblies, fitting to supporting beams, car frames, Counterweights by means of suitable Rope termination. A Locking Device or Anti-Twist Rope Device shall be fitted to the roping System.

© 2022 MECON Limited All rights reserved

- **Rope fastenings**

The ends of lift ropes shall be properly secured to the car and counter eight hitch plates as the case may be with adjustable rope shackles having individual tapers Babbitt sockets or any other suitable arrangement. Lift rope shackle shall be fitted with a suitable shackle spring, seat washer, shackle nut & lock & shackle nut split pin.

2) Car frame

Every lift car shall be carried in a complete frame of steel which shall be sufficiently rigid to withstand the operation of the safety gear without permanent deformation to the car frame. The car structure shall be of steel with special painting or of stainless steel.
At least four renewable guide shoes with renewable linings or set of roller guides shall be provided, two at the top and two at the bottom of the car frame.

a) Car enclosure

The car shall be enclosed on all sides by means of car body and door. The sides of the car shall be lined with heavy gauge stainless steel sheet plate properly braced and reinforced.

The enclosure shall be flush on the inside and securely fastened to the platform. The car body floor shall be of M.S steel construction with chequered plate top. Side panels shall be of stainless steel grade 304, 1.2mm thk and roof of stainless steel over MS frame.
The car shall be equipped with handrails on three sides, fan with grills and suitable lighting with fittings. The light shall be left on during the whole time of use. The fan and light shall be operating in case of power failure and automatic rescue device is in operation.

Necessary provisions shall be made for adequate ventilation of the car. Ventilation opening shall be provided in the enclosure roof as per requirement of IS: 14665 (Part 3/ Sec 1 & 2)-2000. A separate switch shall be provided in the car for the fan.

The enclosure of the lift car shall withstand a thrust of 35 kgs applied normally at any point, excepting any vision panel, without permanent deformation.

b) Car platform

Car platform shall be constructed of structural steel shapes or securely fastened with steel flooring covered with PVC tiles flooring. The platform shall be designed

© 2022 MECON Limited All rights reserved

on the basis of rated loads evenly distributed. The car floor shall comprise a smooth non-slip surface.

Since the car leveling device will be used, subsequent aprons of sufficient depth shall be fitted to the car floor to ensure that no space is permitted between the threshold and the landing while the car is being leveled to a floor.

c) Car roof

Car roof shall be covered with sheet metal to prevent dripping of lubricants from ropes-sheave bearings. The top flooring shall be of steel with decorative false ceiling. A three pin plug socket with a switch for head lamp shall be fitted on the top of the car for use during maintenance. The roof shall be strong enough to support at least two persons.

Provision for slow speed (1/2 of rated speed) operation from car top in up and down directions in independent mode shall be made to facilitate maintenance of devices in the hoist way. Necessary fittings shall be provided for this purpose.
Difference in levels of the car floor and landing shall not exceed the figures indicated in IS 14665 (Para 3/Sec 1 & 2)-2000 under heading “Levelling Accuracy".

Suitable lubrication system shall be provided for guide rails as well as for other items.

d) Car Door

The elevator car shall be provided with Automatic power driven centrally opening doors, matching with hoist way doors.

Manually operated Collapsible door may be provided if required and by the Purchaser.

The door of elevator shall open at all the platform levels.

Car door shall have a clear opening in accordance with the recommendation of IS 14665(Part-1) 2000, depending upon type(Passenger or Goods) of Lift and Load carrying capacity. Moreover, door entrance minimum clear height shall be 2000mm. The door operation shall be either automatic or manual as per Purchaser requirement.

e) Hoist Way Door

Automatic power driven centrally opening doors/ manually operated collapsible door having a clear opening as per IS: 14665 (part-1) recommendations shall be

© 2022 MECON Limited All rights reserved

provided at each of the landing for elevator door.

f) Door Hangers & Tracks

Hangers and tracks for car door and each having a clear hoist way door shall be provided. Suitable material shall be used to minimize the noise. Ball bearing rollers or equivalent arrangement shall be provided to take upward thrust of the doors. Suitable devices shall be provided for transmitting from one door panel to the other.

All required material for landing entrance e.g. extruded aluminum or equipment sills, strut angles, headers, etc. shall be provided.

g) Door operation for car door and hoist way doors

The doors operations shall be automatic/manual. The necessary door cushioning device shall be provided.

Necessary safety devices shall be provided in automatic door to prevent the movement of the car until the car door and hoist way doors are closed properly.

The car and hoist way doors shall open automatically in case of any obstruction in closing the doors.

h) Door Safety Devices

Automatic doors shall be provided with full height light curtain having criss cross infrared beams thoroughly covering the full height of Car door. In case of any interruption while closing, the doors shall retract without physically touching the passenger.

i) Car Self-Leveling Device

The elevator shall be equipped with automatic self-leveling devices to bring the car to the floor landings. These self leveling shall be correct for over travel or under-travel and rope stretch.

3) Control and operation

The elevator control shall be through digital controls and VVVF drives.

The operation of the elevator i.e. method of actuating the control shall be "Selective Collective Automatic Operation" as per clause 3.41.3 of IS- 14665 (Part2/Sec1): 2000 with and without attendant. All accessories required for the

© 2022 MECON Limited All rights reserved

collective operation as outlined therein, namely selector and its driving shall be furnished complete.

The controller shall be microprocessor based.

4) Car Position Indicator in Car

A signal indication shall be provided by the appropriate numeral (which shall be floor no./ level of respective floor) being illuminated when the car is passing the corresponding floor. The indication shall remain illuminated when the car is stopped at a floor. Up & Down direction jewel lights shall also be provided. The car position indicators are needed to be provided at all landings.

Provision to indicate lift capacity in Kg as well as in terms of person shall be made available in the car. Other signals like "over load" "Lift is under maintenance" etc. shall also be provided.

Push Button Station and Call- Registered Tell-tale Lights at Hoist way.

A single 'Up" and "Down" push button at terminal landings and "Up" "Down" each push intermediate landing including call register light for each push button shall be provided. These shall remain illuminated till the call is answered.

5) **Emergency Exit**

The elevator car shall be provided with an emergency exit of adequate dimension.

6) Terminal Buffers

The terminal buffers shall be provided for stopping the car and the counter weight at the extreme ends of travel. All structural steel members required to install the buffers shall be supplied by the lift supplier.

7) Counter-Weights and Counter-weight Frames

Counter weight sections shall be mounted on structural metal frames so designed to retain the weights securely in its place.

Counter –weight frame shall be guided on each guide rail by upper and lower guiding members attached to the frame

A substantial metal counter- guard of required length shall be provided at the

© 2022 MECON Limited All rights reserved

bottom of the hoist way.

A compensating chain of adequate strength connecting car bottom and counter weight frame shall be provided for balancing the car and counter- weight while running with minimum load condition.

8) Guides for Car and Counter- weight

Car and counter- weight guides shall be of rigid steel and shall be continuous throughout the entire length and shall be provided with adequate steel bracings and stiffeners. Guide for both car and counter weight shall meet the requirement of IS:14665, Part-3. The necessary lubrication device for guide rail shall be provided.

9) Terminal Limit Switches and Final Limit Switches

Terminal limit switches for normal operation shall be provided to slow -down and stop the car automatically at terminal landings and final limit switches shall be provided to automatically cut off the power and apply the brake, when the car travel beyond the terminal landing.

10) Automatic Rescue Device (ARD)

The Automatic Rescue Devices (ARD) is meant for the purpose of bringing the lift car to the nearest landing door in case of power failure. The ARD shall have the following features.

a. ARD shall move the lift to the nearest landing in case of power failure during normal operation of lift.

b. ARD shall monitor the normal power supply in the main controller and shall activate rescue operation within 10 second of normal power supply failure. It shall bring the lift to the nearest floor at a slower speed than the normal run.

c. While proceeding to the nearest floor the lift will detect the zone and stop. After the lift has stopped, it automatically opens the doors and parks the door open. After the operation is completed by the ARD the lift is automatically switched over to normal operation as soon as normal power supply resumes.

d. In case the normal supply resumes during ARD in operation, the lift will continue to run in ARD mode until it reaches the nearest landing and the doors are fully opened. If normal power supply resumes when the lift is at the landing, it will automatically be switched to normal power operation.

© 2022 MECON Limited All rights reserved

e. All the Lift Safety Devices shall remain active during the ARD mode of operation. The battery capacity shall be adequate so as to operate the ARD at least three times without recharging of Battery.

f. The Battery shall be housed in a cabinet /Rake with a Corrosion Proof Finish. The Device shall immediately stop the Lift and prevent further movement immediately, if there is a short circuit or open circuit in the Inverter Output.

11) Safety Governor

- The elevator shall be equipped with a safety system complying with the code requirement to protect the car from over speeding downward beyond a predetermined speed. The system shall be separate from the driving machinery and the service brake and shall consist of a rugged fly ball type speed governor or pendulum operated type governor driven by the elevator car. The governor shall conform to IS 14665. Suitable means shall be provided to cut off the power from motor and apply the brake on application of safety.

- Should the elevator begin to over speed the governor shall operate a "safety switch" and cut off the power to the hoisting machine. T his initial action shall apply to the service brakes. Should the car's downward speed continue to increase, the governor shall trip and clutch the governor rope with enough force to set both safety clamps on the elevator car and bring the safety jaws into contact with the guide rails. Instantaneous cam grip safety devices for governors are acceptable.

- After the car comes to a stop, the safety jaws shall continue to grip the rails and hold the car stationary.

3. The Elevator after erection shall be tested as follow:

1. Load test with 100% and 110% of rated load as per clause no.8.1.6 of IS 14665 (Part 2/Sec 1): 2000.

2. A static load test with 125% of rated load as per IS 14665 (Part 2/Sec 1): 2000 to check that the brake will sustain the car.

3. All other tests on electrical system as mentioned in IS 14665 (Part 3/ Sec 1 & 2) - 2000 clause 11.

4. Any other test felt necessary by Purchaser and supplier to ensure proper functioning and installation of the lift.

5. Demonstration of the functioning of all safety provisions made available in the elevator.

6. All other inspection as per IS 14665 (Part – 5) – 1999.

© 2022 MECON Limited All rights reserved

DOCUMENTATION

1. **Information to be furnished by the Bidder along with the tender:**

The Bidder shall submit adequate sets of following technical drawings & technical data/ information with tender for elevator without which the tender shall be considered as incomplete & may not be considered for acceptance.

a) General Arrangement of the Elevator indicating load data, details of various openings in machine room floor as well as lift well shaft, buffers etc.
b) Filled in questionnaire
c) List of commissioning spare,
d) List of spares for two (2) years normal operation and maintenance
e) List of insurance spare for each crane
f) List of special/ maintenance tools & tackles.

2. **List of drawings/ documents to be furnished by the successful Bidder for approval**

a) General arrangement drawing of elevator showing full details in plan and sections.
b) Motor, wire rope and brake selection calculation
c) Single Line Diagrams / Circuit diagrams
d) Quality Assurance Plan for inspection.
e) Test and inspection certificate.
f) List of spares for 2 years normal maintenance.
g) List of insurance spare for each crane
h) List of special/ maintenance tools & tackles.

3. **List of drawings/documents to be submitted along with equipment by the successful Bidder**

a) GA drawings, complete assembly and sub assembly drawings of the equipment.
b) Single line diagrams / Circuit diagrams.
c) Drawings of all equipment/component received from sub supplier.
d) Test and warranty certificate for each item of equipment.
e) Test reports and inspection reports.
f) Instruction manuals for testing and commissioning.
g) Operation, maintenance and safety manuals.
h) Requirement of special tools and tackles, if any, for subsequent maintenance.

© 2022 MECON Limited All rights reserved

QUESTIONNAIRE

01. Name of manufacturer :
02. Nos. Off :
03. Type of elevator :
04. Capacity,
    i. in Kg :
    ii. Number of passenger :
05. Rated Speed (m /min) : 0.5 to 1.0m/sec
06. Total travel (m) :
07. Nos. of floor to be served :
08. Floor levels :
09. Size of elevator well / mast :
10. Internal size of elevator car :

1. Type of car / landing doors :
2. Landing/car door operation : Automatic / Manual
3. Car Enclosure:
4. Total Weight:
    i. Mechanical component :
    ii. Structural item :
    iii. Others :
5. Headroom above top landing :
6. Elevator operation :
7. Method of control : Selective collective automatic control as per clause no. 3.41.3 of IS: 14665 (Part 2/Sec1): 2000 with or without attendant. The control panel shall be located in the machine room. (VVVF control with pulse width modulation)
8. Ambient temperature : 50° C
9. Quantity of Motor :
10. Power consumption :
11. Leveling accuracy :
12. Emergency power supply :
13. Intercommunication :

© 2022 MECON Limited All rights reserved

14. Electric power supply :

    i. Power Voltage (AC) :
    ii. Phase :
    iii. Cycles :
    iv. Wire system
    v. Control voltage (DC) : 415 V ±10%, 3 ph 50 Hz ±5% AC.

15. Signals : Call buttons with Tell-Tale lights at all Floor and car position indicator in car and at all landings.

16. Motor Details
    i. Make :
    ii. Kw rating :
    iii. Frame size :
    iv. Speed :
    v. Duty cycle :
    vi. FL amperes :
    vii. Class of insulation :
    viii. No. of permissible starts per hour :

- Special Features :

© 2022 MECON Limited All rights reserved

07. ELECTRIC WINCH

ELECTRIC WINCH

SCOPE OF WORK

The scope of the supply includes Design, engineering, manufacture, shop fabrication. assembly, painting, testing and inspection at manufacturer's works, packing, dispatch, transportation, delivery to site, required fabrication at site, supervision of installation, testing & commissioning completion of facilities, performance guarantee testing, final painting at site and handing over to site of **'ELECTRIC WINCH AND ASSOCIATED WORKS'** as per specifications and scope defined in tender documents complete with all accessories and drive, which are not mentioned specifically but are required for the efficient and trouble free operation of the equipment/system.

a) Following items are also included in bidder's scope.

(i) Complete Winch including all the mechanical, electrical & Instrumentation items as per the details given in the specifications.
(ii) Consumables like first fill of lubricating oils etc. for the initial operation of the equipment till handing over.
(iii) Commissioning spares and start-up spare parts.
(iv) Special tools & tackles, if any required.
(v) Recommended spare parts for (3) three years trouble free O&M.
(vi) Painting of complete equipment (including final painting before handing over to the Employer). Cleaning of the surface shall be done before painting. The equipment shall be painted with primer and intermediate paint prior to dispatch.
(vii) Painting and erection procedure shall be as per GTS, GS no. 9 & 15 respectively.
(viii) Supervision of Installation, testing & commissioning at site.
(ix) All drawings / documents along with operation and maintenance manuals as per requirement mentioned elsewhere in the tender document.
(x) Getting approval of design/drawings and any other document related to the equipment from Employer/Consultant.
(xi) 3 Ph, 415V, +10% & -15%, 50 Hz +4% & -6%, power supply shall be provided at Electric Winch terminal at one point through power cable.
(xii) Carrying out any modifications/deletions/additions/alteration in design/drawings/ documents as required by client & Client's consultant for proper execution of works at site till completion and handing over of the project to the client.

© 2022 MECON Limited All rights reserved

TECHNICAL SPECIFICATION OF ELECTRIC WINCH

a. The winch hoist shall be designed in accordance with IS:3177-1999 for M5 duty class cranes.
b. The Electric winch shall be designed for providing required pull with wire rope to a take-up trolley travelling on rails for horizontal gravity take-up of parallel belt conveyor.
c. Electric Winch is located at ground level (over RCC foundation) under the overhead Conveyor.
d. Necessary safety items for all machinery and equipment shall be provided. The winch shall be shall provided with canopy so as to ensure the safety from rain, dust & foreign element including unauthorized personnel.
e. Defects in the materials like fractures, cracks, blowholes, or laminations are not allowed.
f. No cast iron parts shall be used except for electrical equipments and no wood or combustible material shall be used unless specifically mentioned otherwise
g. All working parts requiring replacements or inspection or lubrication shall be easily accessible without the need for dismantling of other equipment or structure.
h. All bolts except those with nyloc nuts shall be provided with grip lock nuts or spring washer.
i. All parts of the Winch shall be thoroughly cleaned of all loose mill scales, rust or foreign matter & then painted as specified. All parts inaccessible after assembly shall be painted before assembly & assembled while paint is still wet.
j. All parts except motors, resistors, gears, thrustors, solenoids, etc. shall be de-rusted manually & painted.

k. MECHANICAL DETAILS
   1. Wire rope mechanism

      The wire rope shall be wound on a grooved drum which shall be sufficiently long to accommodate in one layer the length of rope requisite for the specified pull & in addition not fewer than two turns at each anchored end & one spare groove at the opposite end. The winch drum shall be motor driven through gears enclosed in oil filled reduction gearbox.

   2. Rope drums & wire rope

      The material of construction of Rope drums shall be made of rolled M.S. Plates or of cast steel. Stress relieving shall be done in case of fabricated drum. The rope drum shall have machined rope grooves & dynamically balanced. The wire rope selection shall be in accordance with IS: 2266-2002 and relevant IS for factor of safety but minimum 5.

© 2022 MECON Limited All rights reserved

3. Gearing

   For speed reduction gear arrangement shall be as per manufacturer standard. Bought out gearbox shall be of approved make. The construction of gear box shall be done according to GTS guidelines. Gear box shall be Worm & bevel helical gear box shall not be used. The gear pair shall be spur type in case of open gear pair required for reduction.

4. Couplings

   Motor shall be connected to its gear drive by a flexible coupling. Gearing assembly shall be connected with gear box & drum with Geared coupling.

5. Lubrication

   All gears & bearings shall be lubricated either by splash lubrication or by grease. If possible, all the lubricating points shall be centralized grouped together in easily accessible positions

6. Bearings

   Ball & roller antifriction bearings of reputed make shall only be used, with minimum 40,000 hr. bearing life. Bearing housings shall be made of cast or Mild Steel. Housings shall be split type with 4 bolt constructions.

7. Brakes

   Double shoe D.C. Electromagnetic brake shall be provided motion and shall be mounted on the input pinion shaft of the gear train. Mechanical type manual brake shall also be provided on rope drum for emergency.

8. For Electrical specification, refer relevant Technical Specifications.

DATA SHEET OF ELECTRIC WINCH

S.No	DESCRIPTION	Parameters
1	Capacity	As per TS
2	Purpose	Most of the time Holding in position the take-up trolley/ C.Wt. of belt Conveyor Horizontal Gravity take-up and pulling it whenever required.
3	Take-up Travel	Shown in the tender drawing

© 2022 MECON Limited All rights reserved

4	Speed	8 M/min
5	Stationary/movable	Stationary , with steel base frame foot mounted on RCC foundation
6	Wire rope	To suit take up rope.
7	Drum	MS fabricated endless type suitable for above travel length/ as per manufacturer standard
8	Motor	TEFC, Crane duty, 1000 RPM,
9	Ambient temperature	50 deg C
10	Control panel	Refer enclosed TS/ relevant GTS
11	Speed reduction arrangement	As per manufacturer standard
12	Brake	DCEM brake
13	Input Coupling	Geared coupling with Brake drum
14	Base Frame	Fabricated from rolled section and plates etc. with chequered plate floor for working area, Lifting lugs, anchoring holes for foundation bolts
15	Foundation bolts	To be supplied by vendor
16	Operation	Push button station
17	Emergency Brake	On rope drum
18	Rope Guide	On rope drum

DOCUMENTATION

1 <u>DOCUMENTS / INFORMATION TO BE FURNISHED ALONGWITH TENDER.</u>

(i) Clear Scope of supply.
(ii) List of Commissioning spares and start-up spares with unit rates.
(iii) List with unit rates of special tools and tackles, if any required.
(iv) Price Schedule for supply & erection work as per the format enclosed.
(v) List of recommended spare parts for 2 (Two) years trouble free operation and maintenance along-with unit rates as per the format enclosed in price schedule.
(vi) Technical data sheets duly filled by the bidder (blank data sheets enclosed).
(vii) Catalogues/ Leaflets and O&M Manuals.

© 2022 MECON Limited All rights reserved

(viii) Reference list of your Customers for the similar supply of items.

2 LIST OF DRAWINGS / DOCUMENTS REQUIRED

1. **List of Drawing/ Documents to be furnished by the Successful Bidder for approval / reference**.
   a) General arrangement drawing of equipment showing full details in plan and sections.
   b) Engineering and design calculations.
   c) Quality assurance plan for inspection.
   d) Specification of oils and lubricants and other consumables and their quantity and frequency of change (reference).
   e) Detailed layout plan and sections for power supply system.
   f) Other drawings & documents required as Employer/ Consultant.

2. **List of Drawing/ Documents to be furnished alongwith equipment by the Successful Bidder.**

   a) GA drawings, complete assembly and sub assembly drawings of the equipment.
   b) Engineering and design calculations.
   c) Test and warranty certificate for each item of equipment including electrical equipment, cables, insulation and all parts used in handling loads, as for instance, wire ropes etc.
   d) Material test certificates of mechanical components such as couplings, gear boxes, rope drums, pulleys, shafts gears, wheels etc. & steel structure.
   d) Test reports including speed test & brake test and inspection reports.
   e) Instruction manuals for testing and commissioning.
   f) Operation, maintenance and safety manuals.
   g) Requirement of special tools and tackles, if any, for subsequent maintenance.
   h) All other drawings & documents as stipulated in Tender document.

© 2022 MECON Limited All rights reserved

QUESTIONNAIRE / TECHNICAL DATA SHEET (To be filled by the vendor)

1.	Capacity (Tonne)	
2.	Quantity	
2.	Speed (M/Min.)	
	Liner speed	
	Drum rpm	
3.	Standard/s followed for winch	
4.	Rope travel	
3.	Total Weight of the Winch	
4.	WIRE ROPE	
	i) Type of construction	
	ii) size	To suit take up
	iii) length of rope	
	iii) Factor of safety	
5.	ROPE DRUM	
	i) Material of constructions	
	ii) Drum diameter & length	
6.	DRIVE	
	Open drive details PCD of Gear PCD of Pinion Type of gear Module	
	Gear Box	
	i) Type, make & material of gear box	
	ii) Gear & pinion details	
	iii)Reduction ratio	
	iv) Lubrication	
7.	MOTOR	
	i) Type & number	
	ii) kW rating	
	iii) Synchronous speed	
	iv) Class of insulation	
	v) Pull out torque	
	vi) Frame size	
8.	BRAKE	
	i) Type	
	ii) Size	
	iii) Torque rating	
9.	Type & details of limit switches	

© 2022 MECON Limited All rights reserved

10.	Type of couplings	
11.	Type of bearings	
12.	Type & details of Controls	
13.	Drawing indicating the basic dimensions.	
14.	Type & lubrication provided	
15.	Foundation bolt size & quantity	
16.	Intermediate pulley details, if any	
17.	Any other information	

© 2022 MECON Limited All rights reserved

08. TRANSFER CAR:

Scope of Work

The scope of work of the Bidder shall include design, engineering, manufacture, fabrication, assembly, testing and inspection, packing, dispatch, transportation, delivery FOR Employer's site, unloading, handling and storage at site, erection, erection supervision, testing, inspection, commissioning, guarantee testing and handing over to the Employer including all electrics and standard accessories of electrically operated self propelled transfer car as covered under this specification.

The scope of the Bidder shall be deemed to include all such items which although are not specifically mentioned in the specification, but are needed to make the equipment complete in all respect for its safe, reliable, efficient and trouble free operation.

- Two years maintenance spares.
- Commissioning spares as required during testing and commissioning of the equipment.
- Insurance spares.
- Required quantity of initial fill of oil, grease, lubricants, hydraulic fluid, etc. and other consumables which are necessary for cleaning/ flushing including erection, testing and commissioning the equipment shall be in the scope of supply of the Bidder.
- Necessary tools and tackles for each equipment required for maintenance, testing or inspection of the equipment.

GENERAL

01 The transfer car will be designed, manufactured and tested in accordance with the relevant clauses of IS: 3177-1999. The standards referred there in and subject to any modifications and requirements specified in this contract specification.

02 The transfer car components will be standardised to keep the number of spares minimum.

03 All parts requiring replacement or inspection or lubrication will be easily accessible without the need for dismantling of other equipment or structures. All electrical cables will be so laid that they are not liable to be damaged and can be easily inspected and maintained.

© 2022 MECON Limited All rights reserved

04 For welded construction such as that of main frames, gear boxes and other load bearing members, steel will conform to IS: 2062-2006.

For welding these members low hydrogen electrodes will be used as per IS: 814-2004 grade EB-542C-H83.

05 Minimum 750 mm wide chequered plate platforms will be provided for the control post wherever control post is provided with the transfer car.

06 No cast iron parts will be used on the transfer car except for electrical equipment. Similarly no wood or other combustible material will be used in any part of the transfer car.

07 Painting and erection procedure shall be as specified elsewhere in the GTS.

STRUCTURAL DETAILS

Transfer car structures will be designed in accordance with IS: 807-1990 taking the following additions/deviations into account.

01 Black bolts will not be used in the main structures of the transfer car.

02 Bolts used in shear will be fitted into reamed holes.

03 Transverse fillet welding on load carrying members will be avoided.

04 All butt welds on structural members subject to tensile stress will be X-rayed.

05 Minimum thickness of chequered plates for platforms will be 6 mm over plain for indoor transfer cars and 8 mm over plain for outdoor transfer cars. Chequered plates will not be considered for strength calculations of load carrying members. Chequered plates will be supported on a frame of beams adequately designed to take the rated load anywhere on the transfer car platform.

06 The under frame will be fitted with substantial safety stops to prevent the transfer car from falling more than 25 mm in the event of breakage of track wheel, bogie or axle. These safety stops will not interfere with the removal of the wheels.

07 Suitable jacking pads at a height of 300 mm from rail top will be provided on under frames for jacking up the transfer car when changing track wheels. Jacking pads will not interfere with the replacement of track wheels.

© 2022 MECON Limited All rights reserved

08 Main frame will be fabricated in one piece unless there are transport limitations. Connection between the two parts of the frame will be done by machined bolts or rivets.

09 All the mechanical and electrical equipment will be placed below the top plates.

10 The maximum settlement of the platform under rated load will not exceed 2-3 mm limited to span/1000.

11 **Drive Suspension Frame**

a) All the driving mechanism such as motor, brake, gear box etc. will be mounted on a rigid rolled section steel frame and suspended below the under frame with one end resting on the drive axle on anti-friction bearing, while the other end will be elastically fastened to the under frame through helical compression springs. Drive Mechanism will be protected from heat by providing heat shield on heat exposed area.

b) Clearance between ground and bottom most portion of the car will not be less than 100 mm.

12 Chequered plate steps suitably welded at convenient location on either side of the transfer car will be provided for climbing up on the platform wherever necessary.

MECHANICAL DETAILS

01. **Wheels**

a) Solid wheels of forged, rolled or cast steel conforming to 55C8 of IS:2004-1991 but latest and IPSS 1-08-001-83 will be used.

b) Wheels will be heat treated to have a hardness of BHN 300 to 350 on the rolling surface and flanges to a depth of not less than 10 mm with a smooth pass to the non- hardened zone.

02. **Axles**

Axle will be made of class 4 steel to IS: 1875-1992.

03 **Axle Box Assembly**

The material of axle box casting will conform to steel as per IS: 1030-1989 grade-1.

Spring seats, wherever required, will be finished by machining.

© 2022 MECON Limited All rights reserved

04 **Springs**

All helical compression springs will be designed in accordance with IS: 7906-1 - 1997.

Spring ends will be finished square with respect to its axis.

The spring will be designed on the basis of virtually infinite life i.e. to withstand ten million load cycles or more without failure.

05 **Axle Box Frame**

Axle box frame of cast steel or fabricated steel construction will be stress relieved and accurately machined. The parallelism between the faceplate and their perpendicularity with the top surface will be closely maintained.

06 **Buffers**

Spring loaded or other better type buffers will be fitted on the four corners of the transfer car for ensuring soft dashing of transfer car against stop.

Buffers will be rigidly bolted in place, preferably along the centre line of transfer car track such that the bolts are not in direct shear.

Buffers will be designed to absorb the kinetic energy released at 50% of the full load rated travelling speed, the average rate of deceleration not exceeding 4.8m/sec^2 at 40% of the rated travelling speed.
Buffers will have a contact surface of not less than 125mm in diameter and mounted so as to provide 100mm clearance between the fixed structures and car outreach when buffers of transfer cars are fully compressed.

07 **Drive mounted on transfer car**

For travel motion central drive will be used. It will be mounted as close as practicable to the center of the car.

Drive shaft coupling will be as near to the bearings as possible.

All parts of the travel drive will be easily accessible for inspection, maintenance and removal from topside of platforms.

08 **Gearing**
Straight and helical spur gearing will be used. Worm and bevel gears will not be used.

© 2022 MECON Limited All rights reserved

First and high-speed reductions will be through helical gears.

All first reduction pinions and also other pinions if feasible will be integral with the shafts.

All gears will be of hardened and tempered alloy or carbon steel with machined cut teeth. Gear teeth will be cut in metric module system only. Flame hardening of gears and pinions with manual process is not allowed.

All spur gears will have 20 deg. Pressure angle with involute teeth profile. All gears will be ground finished to suit the service conditions.

Overhung gears and pinion will not be used.

Surface hardness for pinion will be 266 t0 300 BHN and for gear it will be 217 to 255 BHN. Difference in hardness of pinion and gear will not be less than 20 BHN.

09 **Gear Box**

All gear shafts will be supported in anti-friction bearings.
In gearboxes splash or automatic lubrication systems will be used.

The gearbox will be fabricated / cast steel. Fabricated gearbox will be made of minimum 8-mm thick steel plate and will be stress relieved.

Covers will be split horizontally at each shaft centre line and fastened and arranged so that the top half can be removed for inspection and repair without disturbing the bottom half. Vertical gearbox may be provided with T-splits.

Directly above the mesh line of teeth, there will be hand-hole with oil tight bolted covers.

The gearboxes will be provided with breather vents, oil level indicator, dipsticks and easily accessible drain plugs.

Radial clearance between the gear box inner surface and the outside diameter of the gears will be at least 1.25 times the depth of the largest gear tooth inside the gear box or 20 mm whichever is higher. The facial or side clearance between the inner surface of the gearbox and the face of the gear or pinion will be at least 20 mm.

Gearbox will be mounted on machined surfaces and will have machined feet. Shims will not be used.

© 2022 MECON Limited All rights reserved

10 **Bearings**

Only anti friction bearings will be used.
Rated life of anti-friction bearings will not be less than 40,000 hours.

11 **Couplings**

Motor shaft will be connected to gear box input extension shaft through flexible gear couplings with crowned teeth. Gear coupling will also be provided between gearbox and axle wheels, if required.

All couplings will be of forged steel and will be designed to suit the maximum torque that can be developed.

Hardness of gear coupling casing will be more than 340 BHN and that of toothed bush will be more that 340 BHN. Bolt connection of couplings will be easily accessible for inspection and tightening.

12 **Brakes**

Double shoe brake will be provided for the drive of the transfer car and will be mounted on the input pinion shaft of the gearbox. The brake shoe will be of hinged type.

Brake drum will be forged or of cast steel and will be completely machined and dynamically balanced. Diameter of the brake drum will be selected from preferred number series. Width of the brake drum will be 10 mm more than the width of the brake shoes of each size. Hardness of the brake drum will be 300 to 350 BHN.

Rating of brake will be selected as per braking moment required for the drive with factor of reserve and the necessary heat dissipation capacity.

Brake will be installed such that it is easily approachable for servicing.

Braking against travelling will be capable of arresting the motion within a distance in metres equal to 10% of speed in meters /minute when travelling with rated load and speed, without skidding.

Adequate means will be provided on outdoor transfer car for securely anchoring the same to the rail when not in use. Co-efficient of reserve of the holding force will not be less than 2 considering maximum wind pressure.

In case of power failure there will be automatic braking of the transfer car.

Brake shoes will be of cast or forged steel.

© 2022 MECON Limited All rights reserved

13. **Shafting**

Shafts and axles will also be checked for endurance and strength. In proportioning shafts, allowance will be made for keyways and splines.

Changed of section in shafts will be made with due allowance for stress concentration.

14. **Lubrication**

Grouped grease lubrication system for bearings will be provided for transfer cars.

Minimum internal diameter of grease pipe will be 6mm. The pipe will be securely fixed and protected from damage and assessable throughout.

Effective protection will be provided to prevent ingress of dust on the lubricant and such protection will also be weather proof on outdoor transfer car.

DOCUMENTATION

1. **List of drawings /data to be submitted along with tender**

a. General arrangement drawing of equipment showing overall dimension, profile, material of construction, weight, etc.
b. List of commissioning spares proposed by the Bidder.
c. List of spares for two years operation.
d. Duly filled up questionnaire.

2. **List of drawings to be submitted for approval by successful Bidder**

Drawings listed hereinafter shall be submitted to the Employer/ Consultant for approval, starting within one month of issue of letter of intent and prior to the commencement of fabrication.

a. General arrangement drawing of Transfer Car showing overall dimension, profile, material of construction, weight, bill of materials etc.
b. In addition to the above, the Employer/ Consultant reserve the right to insist on submission of calculations/ for component selection.

3. **Drawing/data/calculation for reference to be submitted by successful Bidder**

a. Procedure for testing and commissioning.
b. Instruction for storage /erection, testing & commissioning.

© 2022 MECON Limited All rights reserved

c. Catalogues/literatures
d. Operation and maintenance manual.
e. Final test certificates
f. For reference & records.
g. Part list, bill of materials and specification.
h. Major sub-assembly drawings of drive, safety features, lubrication details etc.
i. List of spares, consumables, special tools and tackles.

25.00 Questionnaire

The Bidder shall also furnish the following questionnaire and submit with his offer. This data shall form a part of the contract with Successful Bidder.

01. Name and address of the Bidder :

02. Previous experience of the Bidder :

03. List of similar equipment supplied along with user's certificate :

04. Location / Nos. off :

05. Linear speed :

06. Capacity :

07. Material of construction of different parts :

08. Total weight and weight of individuals parts :

09. Motors

a) KW rating :
b) RPM :
c) Type :

10. Gear Boxes

a) Make :
b) Type :
c) Reduction ratio :
d) Torque rating (kg-m) :
e) Overall efficiency :
f) Wt. of Gear box (kg) :

© 2022 MECON Limited All rights reserved

11. Couplings

a) Make and type of couplings :

12. Type, number & capacity of Buffer :

© 2022 MECON Limited All rights reserved

UTKARSHA ALUMINIUM DHATU NIGAM LIMITED

ESTABLISHING FACILITY FOR ALUMINIUM ALLOY MELTING, SLAB CASTING AND FLAT ROLLED PRODUCTS PRODUCTION FACILITY

GENERAL TECHNICAL SPECIFICATION
FOR
PREFERRED MAKES
(GS – 14)

MECON LIMITED
RANCHI - 834002

No. MEC/S/11/35/Q7R6/GTS/01/R0 **JUNE' 2022**

LIST OF CONTENTS FOR GS - 14

SL. NO.	DESCRIPTION	PAGE NO.
01	PREAMBLE	2-2
02	FLUID SYSTEM	2–8
03	VENTILATION, AIR CONDITIONING AND AIR POLLUTION CONTROL EQUIPMENT	9–11
04	HANDLING & HOISTING EQUIPMENT	12–18
05	ELECTRICAL	19–35
06	INSTRUMENTATION	36–42
07	FIRE PROTECTION SYSTEM	43-43
08	LEVEL-II AUTOMATION	43-43
09	FLUID SYSTEMS & PIPING ENGG	44-47
10	CIVIL	48-52
11	LABORATORY EQUIPMENT	52-53

© 2022 MECON Limited All rights reserved

01. PREAMBLE

This document "PREFERRED MAKES OF EQUIPMENT AND SUPPLIES" is a part of the tender specification for various packages of Aluminium Alloy Melting, Slab Casting And Flat Rolled Products Production Facility of UADNL at Nellore, Andhra Pradesh.

The makes of various equipment and supplies in respect of imported/indigenous equipment/components/materials are listed out in this document. It is essential that the equipment/component/materials to be supplied from imported/indigenous sources by the Tenderer will be of any one of the makes listed against that particular equipment / component / material in this documents. In case of any contradiction in respect of 'Preferred Makes' indicated in this document with the preferred makes indicated in any other tender document, the one indicated in this document shall prevail.

In case the Tenderer/ Contractor intends to substitute any particular make of equipment / components/ materials by a make other than that listed in this document, the Tenderer shall clearly bring out the same in his tender along with justification and indicate the alternative makes offered by him. It will be prerogative of the Purchaser to accept or reject the alternative makes so offered. Refer clause 01.05.01 of GS-01 also.

02 FLUID SYSTEM

02.01 WATER SYSTEM

Sl. No.	Item Description		Make
1.	Horizontal Centrifugal Pump	:	Kirloskar Brothers Limited, Mather & Platt (WILO), KSB, Sulzer, Beacon Weir, Flowserve,
2.	Vertical Centrifugal Pump	:	KSB, Kirloskar Brothers Limited, SU Motors, Grundfoss, Mather & Platt (WILO), Sintech pumps, Flowserve, Kishor Pumps
3.	Vertical Turbine Pump	:	Kirloskar Brothers, Mather & Platt (WILO), WPIL, Jyoti, Sintech pumps, Flowserve
4.	Submersible Pumps	:	KSB, Kirloskar Brothers, Darling, SU motors, Kishore pumps, Grundfos, Mather & Platt (WILO),
5.	Slurry Pump	:	Weir Mineral (India) Pvt. Ltd, WEIR Minerals, Metso, Sam Turbo Industry Pvt. Ltd, AKAY
6.	Screw Pumps (positive displacement/ progressive cavity type)	:	Roto, Ramo, Floosys, Alfa Helical, Tushaco, Hydro Prokav, Rotomac
7.	Chemical Dosing Pump / Metering Pump	:	Shapo Tools, Positive Metering Pumps, Toshniwal, Milton Roy India, Prominent, WASP, Metachem,
8.	Diesel Engine for Pumpsets / Fire water Pumpsets	:	Ashok Layland, Caterpillar, Greaves Cotton Limited, KOEL
9.	Rubber Dismantling Joints	:	CORI Engineers, D.Wren, Aphrodite Polyprene Pvt. Ltd.

© 2022 MECON Limited All rights reserved

Sl. No.	Item Description		Make
10.	RCC Cooling Towers Induced draft/Natural draft	:	PCTPL, Gammon, Paltech Cooling Towers, Southern cooling tower, HAMMON
	Package type FRP / GRP / Timber type Cooling Tower	:	PCTPL, Himgiri, Southern cooling tower, Paltech Cooling Towers
11.	Oil Skimmer	:	JVM Marketing, Potential engineering Mumbai, Oilskim SystemsPvt. Ltd Pune
12.	Sludge Scrapper	:	Triveni, Neo–Parisrutam, Mata India, Ramakrishna
13.	Traveling Water Screen / Rotary Water Screen	:	Macmet, Triveni, General Mechanical, Otoklin, Mecgale
14.	Filter Press	:	Andritz, FL Smith, PURAV Industries (DINSHAW), LAROX, Diemme, Panama, Yotana
15.	Strainer / Automatic backwash filters	:	Filtration Engrs, Otokiln, Superflo, HYDAC, Amiad Filtration
16.	Automatic Valve less Gravity Filters	:	Otoklin, Thermax, ION EXCHANGE, Filtration Engrs
17.	Pressure sand Filters	:	Thermax, Ion-Exchange, Voltas, VA Tech Wabag, Resin India, GE water, Dan Filter
18.	Softening Water Plant/Demineralised Water Plant	:	Thermax, Ion Exchange, Resin India, Aqua Designs India Pvt. Limited, Driplex Water Engineering Pvt. Ltd., PENNAR ENVIRO LTD.
19.	Resin	:	Thermax (Tulsion), Ion Exchange (Indion), Duolite
20.	Blower	:	Kay International, Patel Blowers, Usha, Turbomax, Siemens, KPT, Swam Pneumatics, Triveni, Manik Lal, Batliboi, Everest.
21.	Electro Chlorination Plant/ Gas Chorinator/ Chlorine dioxide Plant	:	HES Water Engineers, Denora India, Chloro Control, Pristine Water, Ion Exchange, Pefect Chloro, Capital controls, Toshcon Jesco, Penwalt, IEC Fabchem, Banaco, Metito Pollution Control Pvt Ltd, Industrial devices, Grundfos, Perfect Chloro, Vasu Chemicals
22.	Agitator / Mixer	:	Triveni, Remi, Standard, Ceecons. Dorr-oliver, Emco, KCP, Helex, Thermax, Padmatech, Delkor
23.	R O High Pressure Pump	:	Kirloskar Brothers, Mather & Platt (WILO), KSB, grundfos
24.	Ultra Filtration Membrane	:	Dow, Toray, Hydranautics SUEZ, Membrane Hitech, Davey Products, INGE
25.	R O Membrane	:	Dow, Toray, Hydranautics Permionics, SUEZ
26.	Evaporator	:	Chem Process System, Mazda Limited, Unitop, Raj Process & Equipment Pvt Ltd., Praj Industries, SSP, Alfa Laval, GE water
27.	ATFD (Automatic Thing film dryer)	:	Unitop, Raj Process & Equipment Pvt Ltd., Praj Industries, SSP
28.	Water / Waste water treatment plant		VA Tech, Effwa, Ion Exchange, Thermax, Voltas, Eimco KCP, Triveni, Paramount, L&T, Euerka, Resin India, Arbind Envisol, Toshiba water, Suez, Velolia, Gei Miller
29.	Clarifier / Thickener	:	Triveni, Thermax, HDO, Eimco-KCP, Va-Tech Wabag, BGR Energy
30.	Centrifuge Machine	:	Alfa Laval, Humbolt, West Falia, Penwalt, Hiller, FERRUM

© 2022 MECON Limited All rights reserved

Sl. No.	Item Description		Make
31.	Basalt Liners	:	DEMECH, Turbo Engineers Coimbatore, Enviro Abrasian, Garden Reach Ship Builders & Engg, BMW Steels ltd. Delhi, S. R. Polychem.
32.	Plate Heat Exchangers	:	Alfa Laval, Kelvion, Tranter, Schmidt-Bretten India
33.	Finned Tube type Heat Exchanger	:	BGR energy, ALFA Laval
34.	Swing Check Valve/Dual plate check valve	:	VTI, L&T Valves, Weir BDK, Kirloskar, Steam & Mining, Deval, Intervalve (Poonawalla) Ltd.,
	Lift Check Valve	:	Leader, Upadhyay, IVC
35.	Safety Valves	:	JNM, Fouress, Danfoss, Leser valves, Nirmal Industry
36.	CS Valves (Gate, Globe)	:	L&T Valves, KSB, Weir BDK, KBL, Virgo,-Fouress, Steam & Mining
37.	Ball Valves	:	L&T Valves, Crane Process, Weir BDK, Virgo, Delval, Vaas, Mircofinish
38.	GM & Copper Alloy Gate, Globe & Ball Valves	:	Leader, Kirloskar, SKM, Zoloto, IVC, Steam & Mining, Weir BDK
39.	Butterfly Valves (Manually, pneumatic & electrically operated)	:	L&T Valves, Fouress, Kirloskar Brothers, Emerson, Weir BDK, Crane Process, Jash Engineering, Delval flow control, Audco, Fischer, Intervalve (Poonawalla) Ltd., Pentair,
40.	Knife Gate Valves	:	Jash Engineering, Orbinox, Weir BDK, Vass, Fouress, VIT
41.	PP / CPVC / UPVC Valves	:	George Fischer, Astral, ORIPLAST, Finolex
42.	Diaphragm Valves	:	Fluid System, Micon, Weir BDK, Crane Process
43.	Float Valve	:	Leader, IM Engineers, Shiv Durga, Upadhyay, Steam & Minin, H Sarkar,
44.	Control Valve	:	L&T Valves, IL, MIL Controls, NECO Scharbet, Darling, J N Marshall, Crane Process, Emerson,
45.	Solenoid Valve	:	Rotex, Sicmag, Scharder, NECO INDFOS, Eastern Pneumatic, AVCON, ASCO, Rexroth
46.	Air Release Valve	:	Shiva Durga, Leader, Upadhyay, IVC, H. Sarkar, Fouress, Jash, Kalpana
47.	Pressure Reducing Valve	:	JNM, Fouress, Bestobell, IL, Mazda, NirmalInd., Forbes Marshal, Danfoss, Emerson,
48.	Sluice Gate	:	Jash Engineering, Steam & Mining, Indian Valve Pvt. Ltd. Nashik, Durga Valves, H Sarkar, Kalpana
49.	Fire Fighting System including hydrant valve, fire hoses & accessories	:	New Age Industries Surendranagar, New Fire Engineers, ASCO, Strumech, Zenith, Gunnebo, Chhatriya Rubber
50.	Electric Actuators	:	Rotork, Auma, Marsh Engineers, Emerson, Limitorque, IL Palghat
51.	Rotory Pneumatic Actuators	:	Crane Process, EMERSON, L&T, Delval flow control, Rotex, Pentair
52.	Rubber coated SS Hoses	:	Aeroflox, Markwel, Senior Flexonics, Teksons, PARIKH
53.	Chemical Dosing System	:	Ion Exchange, Thermax, Vasu Chemicals, Nalco, Chembond Solenis Water Technologies Limited, GE Water

© 2022 MECON Limited All rights reserved

Sl. No.	Item Description		Make
54.	Chemicals	:	NALCO, Ion Exchange, Thermax, Vasu Chemical, Chembond Solenis Water Technologies Limited
55.	Pipes MS ERW/Spiral Black/Seamless	:	SAIL, TATA, Jindal, Zenith, MAN, SAW, Surindra, Bansal Skipper, Utkarsh, Bhushan, Ajantha Pipes, Venketesh Udyog, JCO Gas pipes.
	GI pipes	:	SAIL, TATA, Jindal, Zenith, MAN, SAW, Surindra, Bansal Skipper, Utkarsh, Bhushan, Ajantha Pipes, Venketesh Udyog, JCO Gas pipes.
	SS Pipes	:	Jindal, Llods, Zenith, Remi, Prakash, Choksi, Ratnamani, Sterling, Bharat Pipes & Fittings,
	DI Pipes	:	Electro Steel Casting, Jindal Saw, Srikalahasti Pipes (Lanco Industries Limited), Kubota, Electrotherm
56.	RCC Pipes & Fittings	:	SUR Industrial Pipes, Patel Hume Pipe, Premier Prestressed Concrete, Pragati Concrete, Hind Ceramics, Indian Hume Pipes,
57.	UPVC, CPVC, PVC, HDPE Pipes & Fittings	:	Oriplast, Finolex, Bharat Pipe & Fittings, Supreme Industries, EPP Composites, Astral
58.	MS Fittings / Forged Fittings / SS Fittings/U-Bolts	:	Engineering Service Enterprise, Sunflex Metals, MJ Patel, Shyam Engineering, Tube bend, Chaman Metals, N.L.Hazra, Veketesh Udyog, Tube Forged, Tube Turns.
59.	Wrapping & Coating for pipes	:	Rustech Products, HOTACO, IWL, M P Tar Products, STP
60.	PVC water storage tank	:	Sintex, Ocean, Plasto, Everest, Polycon, Century, Premier, Kaveri, Chattisgarh plasto
61.	FRP Pipes & Fittings	:	Fibro Plastichem, Nocil, PIL, Orissa Plastics, Coromondel, Graphite India
62.	FRP Vessls / Tanks / Lining of Tanks	:	Fibro Plastichem, Nocil, PIL, Orissa Plastics, Coromondel, Devi Polymers, Sintex

02.02 Valves For Fuel Gas, Steam, Nitrogen, LPG & Compressed Air Facilities

Item Description	Manufacturers
C.I. Valves for Fuel Gas & Compressed Air (gate, globe, NRV)	Kirloskar Brothers, GM Dalui, Steam & Mining, H.Sarker, IVPL, AV Valves, Leader, Associated tooling. BDK, Mather & Platt Pumps, Shiv Durga Iron Works, MCMIRA, Bankim, I. M. Engineers, Venus Pumps, Crawley & Ray, Metropolitan industries, Saradamoni, Upadhya Valves, Universal, Kalpana, R & D Multiples, Durga Engineering, Jupitar, Expert Engineering, VIP Valves, Dembla Valves, Prime Industrial Valves, Fluid control equipment, K.L. Parui & Sons.
CS, FS Valves for Steam, Feed Water, & LPG (Gate, Globe, NRV)	L&T (Audco Div), Fouress, BHEL, KSB, GM Dalui, Leader, BDK, NECO, Associated Tooling, Hawa Egr., Vass Ind, Advance Valves, Kalpana Valves, MCMIRA, Steam & Mining, NSSL Ltd. , Venus Pumps, Crawley & Ray, Asian Industrial

© 2022 MECON Limited All rights reserved

Item Description	Manufacturers
	Valve, BDK Engineering, Econo valves, Metropolitan industries, Saradamoni, Kirloskar, Upadhya valves, Oswal Industries, Steel strong valve, Sawan engineers, Flocwhem, HAWA valves, Expert Engineering, VIP valves, Dembla, Shalimar valves, Bell-o-seal valves, G M engineering.
CI, CS, SS & FS Plug Valves	Vass Ind., Xomox, Virgo, BDK, Leader, Steam and Mining, GM Dalui, H.Sarkar, Audco, Chemtrols , Crawley & Ray, Hawa, .Econo valves, Universal, Fluid control equipment, Durga Engineers
Ball Valves	Audco, Vass Ind, KSB, BDK, Microfinish, Niton,AL Saunders, Xomox, Virgo, United Engineers, Steam & Mining, Hi-Tech B.Valves, AKAY, Leader Valves, Hawa, Tyco valves, Crane process flow, Asian Industries, H. Sarker, Uniflow, Steel Strong Valves, Sawan engineers, Universal, Flowchem, Kalpana valves, Durga, Hawa, Jupitar, VIP valve, Prime Industrial Valves, Fluid control equipment.
GM Valves	Bombay Metals, GM Dalui, Leader, NECO, Kalpana Valves
Butterfly Valves	Audco, Fouress, Kirloskar Brothers, IVPL, Inter Valve, Virgo, AL Saunders, Keystone, BDK, Leader, AVC Engg., Crawley & Ray, Xomox, Tyco, Hi-Tech, Intervalve, Steam & Mining, Venus pumps, Hawa engineers ltd., Crane process flow ltd., Upadhya, Universal, Kalpana valves, R & D Multiples,Durga, Hawa valves, Jupitar, VIP valve, Prime Industrial Valves, Fluid control equipment.
Diaphragm Valves	AL Saunders, Fluid System, Leader, BDK, Xomox, Steam & Mining, Venus valves, Hawa, CRANE, Fluidline valves, Kalpana valves, Expert engineers.
Pressure Control Valve/Pressure Reducing Valve	JNM, Fouress, Bestobell, IL, Mazda, Nirmal Ind., Vanaz, Kosan Metal, Vass Ind., RK Control, Fluid Line, Forbes Marshal, Leader, Hawa Valves.
Goggle Valve	Audco, Fouress, Cimmco, L&T
Fabricated Gate Valves	Fouress, Cimmco, L&T, MCMIRA, Universal.
Safety Relief Valve (Pressure relief Valves)	BHEL, Keystone, Bliss Anand, L&T (Audco Div.), Sempell, Fainger, Leser Valves (P) Ltd., IL, Anderson, Kosan, Leader, Hawa, Tyco, Asian,

02.03 Valves for Oxygen Services:

Item Description	Manufacturers
Non-Ferrous Valves:	
For Isolation	Bestobell (UK), ETH IRELAND (France), RT Orseal

© 2022 MECON Limited All rights reserved

	(UK), Truflo (Belgium), Worcestor Controls (UK),
Quick Shut-off Valve	Bestobell (UK), ETH IRELAND (France), RT Orseal (UK), Truflo (Belgium), Worcestor Controls (UK), Moorco
Pressure Control Valve (PCV) & Flow Control Valve (FCV)	SEVERN (UK), NELES SECK GLOKON (UK), IL (Palghat)
Solenoid Valve	AVCON, SEITZ, ROTEX, ASCO
Safety Relief Valve (SRV)	KUNKLE (USA), KEYSTONE (USA), BROADY (UK), MOORCO, SEBIM, IL (Palghat),
Pressure Regulators (Self regulating with pressure gauge)for Oxygen	ESAB, BOC, Speciality Gases, Kamrup Industrial Gases, Venaz Engineers, Nirmal Ind.
Stainless Steel (SS) (manual) valves	Precision Engg., BDK, Niton, Akay, Leader, Audco, Sakhi & Co., KSB

02.04 **Miscellaneous Gas Facility Equipment**

Item Description	**Manufacturers**
Oxygen Acetylene & LPG Manifolds	INOX, Titan Engg., BOC, Asiatic Oxygen
SS Bellows Expansion Joints	Flexican, Flexatherm, SUR Ind., GBM Mfg., TI Flexible Tube, Madras Hydraulics, Lonestar, Prcision, B.D Engineers, Anup industries, Indo Thai flexible tubes.
Centrifugal Gas Booster	Andrew Yule, TLT, James Howden (U.K), Donkin (U.K), Transtechnologies thermal pvt. Ltd.
Gas/Air Compressors	Ingersoll Rand, Atlas Copco, KG Khosla, Kirloskar Pneumatic, Chicago Pneumatic, Eliat, Cooper, Sulzor, Corken (USA), SIEMENS
Hoses	Flexican, Gaytri Industrial Corpn., Inalsa, Teksons, Sudeep Industries, Markwel, Indo Thai flexible tubes, Hydroflex pipe pvt. Ltd.
Trap & Strainer for Compressed Air & Steam	Uniklinger, ESCO, JNM, Dryton Greaves, Forbes Marshall, Hawa Engrs., Mazda
Electrical	AUMA India, Beacon Rotork Controls, Limitorque
Pneumatic	Marsh Engg., Keystone, IL, Massoneilan, EL-O-MATIC, Virgo, AL Saunder, L&T, Flocan

© 2022 MECON Limited All rights reserved

02.05 Pipes & Pipe Fittings

Item Description	Manufacturers
MS ERW BLACK Pipes upto DN 150	Good luck steel, Advance Steel, Surya roshni Ltd, Shyam engineering, P.K. Tubes, NEZONE, P.S. Steel, Venktesh udyog.
MS PIPES OF SIZE FROM DN 200 TO DN 1400 (ERW/SW/SAW)	SAIL, BHEL, TISCO, Jindal, Zenith, Saw Pipes, Welspun, Man Industries, Maharastra Seamless, Indian Seamless, BST, Advance Steel, Indus Tubes, Mukat, Lloyds, Surya roshni Ltd., Ratnamani, Shyam, P. K. tubes, Venktesh udyog.
SS Pipes / fittings	Heavy Metal Tubes, Nobel Tubes, Rajendra Mech. Ind., Sterling Supply Agency, Vitrag, Poonam Enterprises, N.L.Hazra, M.S.Fittings, Jindal Saw ltd., Ratnamani Metals, Reliable steel
Seamless MS/CS Pipes	Amardeep Steel, Choksy Tubes, MJ Patel, Nagardas Kanji, Poonam Enterprises, Sandulk Asia, MEC Tubes, Nagardas & Kusai, Noble Tubes, Allied Steel, Kamlesh Tube, Menilal & Bro, Uday Tubes, Maharastra Seamless (P) Ltd, Imperial Steel, Soor Neogi Koumar, Jindal, Ratnamani, P.k. Tubes, Reliable steel.
MS/CS Pipe Fittings	EBY Ind., High-Tech, Hydro technic, Hydro-Air Engg., Project Toolings, Shivananda, M.J.Patel, Nagardas & Kusai, MEC Tubes, Nobles Tubes, Amardeep Steel, Allied Steel, Kamlesh Tube, Menilal & Bros, Poonam Enterprises, N.L.Hazra, M.S.Fittings, Sunrise, Prodorite, Tube product incorporate, Gujrat Infra pipes, Modern store, Anil metal, Flash forge, Saradmoni, Sanghvi, Madras Steel, Upadhya valves, Parmar, Strategic Engineering, Sawan, Engineering service enterprise, K.L. parui, Godavari, P.K. tubes, Ferro tubes, Anant extrusion, R.D forge, Venktesh Udyog, Hari udyog.

© 2022 MECON Limited All rights reserved

03. VENTILATION, AIR CONDITIONING & AIR POLLUTION CONTROL EQUIPMENT

Item	Preferred Makes
Centrifugal fans for Ventilation	CBDOCTOR, EFE, FLOW LINK, RIECO, FLAKTWOOD, REITZ, ACCEL, DUSTVEN, F. HARLEY, SUBURBAN INDUSTRIAL WORKS, PATEL AIRFLOW, NADI PASKO ENGG. PVT. LTD., SCINTILLANT PROJECTS, SOIL & ENVIRO INDUSTRIES, FMI, AEROCON CORP, TLT, LAXMI ENGG. *For AHU Fans*: NICOTRA, KRUGER, COMFERÉ
Centrifugal fans for Dedusting	BHEL, TLT, CBDOCTOR, ANDREW YULE, RIECO, BATLIBOI, F.HARLEY, FLAKTWOOD, REITZ, DUSTVEN, ISEL, SUBURBAN INDUSTRIAL WORKS, PASKO ENGG. PVT. LTD., SCINTILLANT PROJECTS, INDUSTRIAL FANS (CHENNAI), SOIL & ENVIRO INDUSTRIES, FMI
Tube axial fans / Propeller Fans	CBDOCTOR, EFE, FLOW LINK, ALMONARD, ACCEL, KHAITAN, AEROVENT, ISEL, FLAKTWOOD, MARATHON, LM ENGG, F. HARLEY, SUBURBAN INDUSTRIAL WORKS, PATEL AIRFLOW, PASKO ENGG. PVT. LTD., SCINTILLANT PROJECTS, TURBOFLOW, INDVENT FANS, FMI, AEROCON CORP, LAXMI ENGG., AIR TECHNIKO
Man coolers **:**	CBDOCTOR, VENTURA, LM ENGINEERS, KHAITAN, ALMONARD, DUSTVEN, FLOWLINK, F. HARLEY, PASKO ENGG.
Roof exhausters **:**	CBDOCTOR, EFE, ACCEL, ALMONARD, FLOWLINK, INDFAN, AEROVENT, **L**M ENGG., F. HARLEY, PASKO ENGG., INDUSTRIAL FANS, AEROCON CORPORATION, LAXMI ENGG. WORKS, GANESH ENGG (VADODARA)
Panel filter for air	FMI, CADILLAC, CBDOCTOR, FILTECH (INDIA), SPECTRUM FILTRATION, ANFILCO, AAF
Air washer **:**	CBDOCTOR, EFE, FLOW LINK, F.HARLEY, ALSTOM, DUSTVEN, FMI, FLAKTWOOD, ROOTS COOLING SYSTEMS, INDVENT FANS, VOLTAS, BLUE STAR, ALMONARD, VENTWELL CORPORATION, ABB
Window air conditioners **:**	VOLTAS, BLUE STAR, CARRIER AIRCON, LG, SAMSUNG, HITACHI, ROOS TEMPKOOL LTD.,
Packaged air conditioners **:**	VOLTAS, BLUE STAR, KIRLOSKAR, CARRIER, EMERSON

© 2022 MECON Limited All rights reserved

Item	Preferred Makes
Packaged chillers **:**	VOLTAS, BLUE STAR, KIRLOSKAR, YORK, DUNHAM-BUSH, CARRIER, TRANE, HITACHI, DAIKIN-MCQUAY
Air handling units / Fan coil units:	VOLTAS, BLUE STAR, SUVIDHA, CARRIER, CARYAIRE, ZECO, AIRFLOW, EDGETECH
Cooling towers **:**	PAHARPUR, MIHIR, ADVANCE, GAMMON INDIA, SHRIRAM TOWER TECH., BELL, ROOS TEMPKOOL
Refrigerant compressors **:**	VOLTAS, SHRIRAM, BLUE STAR, ATLAS COPCO, KIRLOSKAR, HITACHI, YORK, DUNHAM BUSH, CARRIER, TRANE, COPELAND, DANFOSS, BITZER
Duct Insulation	U.P.TWIGA, LLOYDS, BAKELITE HYLAM, MALANPUR ENTECH, OWENS CORNING, PARAMOUNT
Pipe Insulation	BEARDSELL, LLOYDS, THERMOWELL, PARAMOUNT
Vibration isolators	DUNLOP, EMERALD, GERB, GETZNER
Grills / Diffusers / Fire Dampers	RAVISTAR, DYNACRAFT, COSMOS, AIRFLOW, CARYAIRE, AIRMASTER
Pressurized Expansion Tank	ANERGY, GRUNDFOSS
3 / 2 way Control Valve	HONEYWELL, JOHNSON CONTROLS, SIEMENS
Fabricated Duct	ZECO, RADIANT, NUTECH, SPIRO
Strip Heater / Pan Humidifier	ALCO HEATING, DAS PASS, RAPID CONTROL
Balancing Valve	ADVANCE, CASTLE, FLOWCON
Heat Recovery Unit	DRI, FLAKTWOODS, OSTBERG
Actuators	SIEMENS, BELIMO, HONEYWELL, JOHNSON CONTROLS
Cyclones & Multiclones**:**	THERMAX, RIECO, ALSTOM, C.DOCTOR, F.HARLEY, EFE, BATLIBOI, SCINTILLANT, SOIL & ENVIRO INDUSTRIES, CADILLAC, FMI, HAMON SHRIRAM COTTRELL, SHRIRAM EPC, APC SYSTEMS & PRODUCTS, F.L.SMIDTH,
Bag filters (10,000 m3/h to 80,000 m3/h)	THERMAX, ALSTOM, RIECO, C.DOCTOR. F.HARLEY, DUSTVEN, BATLIBOI, FMI, SCINTILLANT PROJECTS, SOIL & ENVIRO INDUSTRIES, CADILLAC, SHRIRAM EPC, HAMON SHRIRAM COTTRELL, APC SYSTEMS & PRODUCTS, F.L.SMIDTH
Bag filters (Above 80,000 m^3/h)	ALSTOM, RIECO, THERMAX, SIEMENS-VAI, DUSTVEN, BATLIBOI, SMS SIEMAG, SHRIRAM EPC, HAMON SHRIRAM COTTRELL, APC SYSTEMS & PRODUCTS, F.L.SMIDTH

© 2022 MECON Limited All rights reserved

Item	Preferred Makes
Pulse Solenoid Valve	ROTEX, ASCO
Filter Bags	BWF, MASTURLAL
Wet scrubbers **:**	ALSTOM, THERMAX, BATLIBOI, RIECO, C.DOCTOR, F.HARLEY, EFE, SOIL & ENVIRO, SHRIRAM EPC, HAMON SHRIRAM COTTRELL
Venturi scrubbers **:**	BATLIBOI, THERMAX, RIECO, ALSTOM, DUSTVEN, HAMON SHRIRAM COTTRELL, SOIL & ENVIRO INDUSTRIES, FMI, SHRIRAM EPC, APC SYSTEM & PRODUCTS
Electrostatic precipitators **:**	THERMAX, BHEL, VOLTAS, ALSTOM, SIEMENS-VAI, SMS SIEMAG, SHRIRAM EPC, ELEX, HAMON SHRIRAM COTTRELL
Centrifugal Pumps – End Suction	KSB, BEACON WEIR, VOLTAS, KIRLOSKAR, MATHER & PLATT, SULZER, PROCESS PUMPS, CRAWLEY & RAY, JOHNSON, MAXFLOW, VIRAJ ELECTRICAL, SINTECH PRECISION PRODUCTS, BAREJA PUMPS, GRUNDFOS PUMPS, SJ INDUSTRIES.
Centrifugal Pumps – Horizontal Split Casing	VOLTAS, BEACON WEIR, KSB, KIRLOSKAR, SAM TURBO, CRAWLEY & RAY, MAXFLOW, SINTECH PRECISION PRODUCTS, MATHER & PLATT
Dust Suppression Systems	SPRAYING SYSTEMS, F. HARLEY, KAVERI ULTRA POLYMERS, TECPRO TREMA, PROJECTS & CONTROLS, TPS, CHEMTROLS

© 2022 MECON Limited All rights reserved

04. MATERIAL HANDLING & HOISTING EQUIPMENT / COMPONENTS

Bidders may please note that in case of being successful in turnkey contracts, the successful Bidder has to adhere to the "List of Preferred makes". Any claim of manufacturing equipment/ components by themselves will not be entertained, until and unless the same is sorted out and agreed in writing by Client/ MECON during the Tendering stage.

04.01 EQUIPMENT

SL. NO.	Item Description	MAKE
1.	EOT CRANE (ABOVE 50 T CAPACITY)	JESSOPS, HEC, MUKAND, FAFECO, UNIQUE, WMI, KONE CRANES ,DHI-DCW GROUP CO.LTD., DEMAG CRANES & COMPONENTS (PTY) LTD.., TZ CRANES, ANUPAM, ELECTROMECH MATERIAL HANDLING SYSTEMS INDIA (P) LTD.., UNICON.
2.	EOT CRANE (UP TO 50 T CAPACITY)	HEC, JESSOP, MUKAND, HYDERABAD IND. LTD.., WMI, FAFECO, UNIQUE, ANUPAM, SHIVPRA, HEBENKRAFT, CENTURY, DEMAG, ELECTROMECH MATERIAL HANDLING SYSTEMS INDIA (P) LTD.., ALPHA SERVICES, UNICON, KRANE MFG (I) PVT LTD., AVON, TECHNO INDUSTRIES
3.	EOT CRANE (UP TO 25T CAPACITY)	UNIQUE, TUBROFURGUSON, SHIVPRA, ANUPAM, FAFECO, HEBENKRAFT, ARMSEL, CENTURY, BRADDY & MORRIS, DEMAG, ELECTROMECH MATERIAL HANDLING SYSTEMS INDIA (P) LTD., MELTECH, ALPHA SERVICES, SAFEX INDUSTRIES LTD., UNICON, KRANE MFG (I) PVT LTD., WMI, AVON, MUKAND, GRIP ENGINEERS PVT LTD., ELITE STEELS PVT LTD., TECHNO INDUSTRIES, HEC,
4.	EOT CRANE (UP TO 10T CAPACITY)	ARMSEL, AVON, FAFECO, MUKAND, WMI, ANUPAM, SHIVPRA, TUBROFURGUSON, UNIQUE, EDDY CRANE, HEBENKRAFT, CENTURY, BRADDY & MORRIS, INDIA ENGG. & IMPLEMENTS COMPANY, DEMAG, ELECTROMECH MATERIAL HANDLING SYSTEMS INDIA (P) LTD., INDIANA MACHINE TOOLS, MELTECH, ALPHA SERVICES, GLOBE GENERAL INDUSTRIES, SAFEX INDUSTRIES LTD, UNICON, KRANE MFG (I) PVT LTD, CONSOLIDATED HOISTS PVT LTD, MR ENGINEERING, GRIP ENGINEERS PVT LTD, ELITE STEELS PVT LTD., TECHNO INDUSTRIES, HEC, NEXGEN,
5.	SINGLE GIRDER CRANE/ UNDER	SHIVPRA CRANES PVT LTD. - CAPACITY UPTO 5 T/ ARMSEL MHE PVT. LTD. / HITECH INDUSTRIES -

© 2022 MECON Limited All rights reserved

	SLUNG CRANE	CAPACITY UPTO 10 T/ CENTURY CRANE ENGINEERS PVT. LTD. - CAPACITY UPTO 10 T/ BRADY & MORRIS ENGINEERING COMPANY LTD. (CAP UPTO 10T)/ INDIA ENGINEERING & IMPLEMENTS COMPANY / ELECTROMECH MATERIAL HANDLING SYSTEMS INDIA PVT LTD. / MELTECH CRANES PVT LTD.-CAPACITY UPTO 5 T/ ALPHA SERVICES-(CAPACITY UPTO 10 T/ GLOBE GENERAL INDUSTRIES -CAPACITY UPTO 5 T/ GHOSH ENGINEERING ENTERPRISES - (UPTO 10T)/ SAFEX INDUSTRIES LTD.. (CAPACITY UPTO 5 T)/ UNICON TECHNOLOGY INTERNATIONAL PVT. LTD. - (CAPACITY UPTO 5T)/ GRIP ENGINEERS PVT. LTD. / TECHNO INDUSTRIES / SHAKTI CRANE & MACHINERY PVT LTD. (CAPACITY UPTO 5 T)/ ELETRO THERAPY - MAX CAPACITY 10T/ UNIQUE INDUSTRIAL HANDLERS PVT LTD. (CAPACITY 10 T MAX)/ PLICARE CRANES MANUFACTURER COMPANY – (CAPACITY UPTO 10 T MAX.)/ TRACTEL TIRFOR INDIA PVT. LTD. (CAPACITY UPTO 5T)
6.	JIB CRANE (COLUMN/ PILLAR MOUNTED)	TUOBRO FURGUSON (I) PVT LTD. / SHIVPRA CRANES PVT LTD. (CAPACITY UPTO 5T) / ARMSEL MHE PVT. LTD. / HITECH INDUSTRIES -CAPACITY UPTO 10 T / CENTURY CRANE ENGINEERS PVT. LTD. - CAPACITY UPTO 10 T / INDIA ENGINEERING & IMPLEMENTS COMPANY / DEMAG CRANES AND COMPONENTS INDIA PVT LTD.(UPTO 5T) / ELECTROMECH MATERIAL HANDLING SYSTEMS INDIA PVT LTD. / ALPHA SERVICES (CAPACITY UPTO 5 T) / GLOBE GENERAL INDUSTRIES (CAPACITY UPTO 5T)/ SAFEX INDUSTRIES LTD.. (CAPACITY UPTO 2T)/ UNICON TECHNOLOGY INTERNATIONAL PVT. LTD.. (CAPACITY UPTO 2T)/ GRIP ENGINEERS PVT. LTD. / LIGHT LIFT INDUSTRIES / ELITE STEELS PVT. LTD./ TECHNO INDUSTRIES / ELETRO THERAPY / HABENCRAFT
7.	ELECTRIC HOIST	1. UPTO 5T: EDDYCRANES ENGINEERS PVT LTD. / REVA INDUSTRIES LTD./ MELTECH CRANES PVT LTD./ GLOBE GENERAL INDUSTRIES/ SAFEX INDUSTRIES LTD./ UNICON TECHNOLOGY INTERNATIONAL PVT LTD./ CONSOLIDATED HOISTS PVT LTD./ 2. UPTO 10T:

© 2022 MECON Limited All rights reserved

		SHIVPRA CRANES PVT LTD. / HITECH INDUSTRIES / CENTURY CRANE ENGINEERS PVT. LTD./ ALPHA SERVICES/ GHOSH ENGG ENTERPRISES/ TRACTEL TIRFOR INDIA PVT LTD./ PAGODA ENGG (P) LTD./ MANGALA HOISTS (P) LTD. 3. UPTO 15T: BRADY & MORRIS ENGG COMPANY LTD./ ELECTRO THERAPY 4. NO LIMIT SPECIFIED EXPLICITLY: ARMSEL MHE PVT. LTD. / TUOBRO FURGUSON (I) PVT LTD. / ELECTROMECH MATERIAL HANDLING SYSTEMS INDIA PVT LTD. / INDIA ENGG & IMPLEMENTS COMPANY / HERCULES HOISTS LTD. / TECHNO INDUSTRIES / WH BRADY & COMPANY LTD. / GRIP ENGINEERS PVT LTD. / ELITE STEELS PVT. LTD./ DEMAG CRANES AND COMPONENTS INDIA PVT LTD./
8.	LIFT/ELEVATOR	OTIS/ MEKASTER ENGINEERING & EQUIPMENTS PVT. LTD. (RACK & PINION ELEVATOR) / OMEGA/ KONE/ THYSSENKRUPP/ ECE
9.	WINCH ELECTRIC	BEEKAY ENGINEERING CORPORATION - MAX CAPACITY 5T/ MINING & MATERIAL HANDLING EQUIPMENT PVT. LTD. CAPACITY 5T MAX / ARMSEL MHE PVT. LTD. / CENTURY CRANE ENGINEERS PVT. LTD. -CAPACITY UPTO 10 T/ GLOBE GENERAL INDUSTRIES MAX CAPACITY 5T/ GHOSH ENGINEERING ENTERPRISES - CAPACITY UPTO 5 T/ NIRMAL EQUIPMENTS PVT LTD. / HEAVY ENGINEERING CORPORATION LTD. / ELECTRO THERAPY - MAX CAPACITY 5T
10.	WINCH MANUAL	INDIA ENGINEERING & IMPLEMENTS COMPANY- CAPACITY UPTO 5T/ CYCLO TRANSMISSIONS LTD.
11.	ELECTRIC TRANSFER CARS	METAL ENGINEERING & TREATMENT CO PVT LTD. / EQUIPMENT ENGINEERS PVT LTD. / LARSEN & T0UBRO LTD. / MUKAND LTD. / HEAVY ENGINEERING CORPORATION LTD. / MELTECH CRANES PVT LTD. (CAPACITY UPTO 25 T CLASS II DUTY)
12.	HAND OPERATED TRAVELLING CRANES	EDDYCRANES ENGINEERS PVT LTD. / ARMSEL MHE PVT. LTD. / ENTURY CRANE ENGINEERS PVT. LTD. -CAPACITY UPTO 10 T/ BRADY & MORRIS ENGINEERING COMPANY LTD.

© 2022 MECON Limited All rights reserved

		(UPTO 5T)/ INDIA ENGINEERING & IMPLEMENTS COMPANY / ELECTROMECH MATERIAL HANDLING SYSTEMS INDIA PVT LTD. / SAFEX INDUSTRIES LTD. - CAPACITY UPTO 5T/ UNICON TECHNOLOGY INTERNATIONAL PVT. LTD. (UPTO 5T)/ M.R. ENGINEERING WORKS - CAPACITY UPTO 10 T/ LIGHT LIFT INDUSTRIES/ HI-TECH
13.	MANUAL HOISTS	ARMSEL MHE / BRADY & MORRIS (CAP. UPTO 5T) / DEMAG CRANES AND COMPONENTS INDIA (CAP. UPTO 5T) / ELECTRO THERAPY (CAP UPTO 15T) / ELECTROMECH MATERIAL HANDLING SYSTEMS INDIA / M.R. ENGINEERING WORKS /HERCULES HOISTS / TRACTEL TIRFOR INDIA / TECHNO INDUSTRIES / WH BRADY & COMPANY / LIFTING EQUIPMENTS & ACCESSORIES / INGERSOLL RAND TECHNOLOGIES AND SERVICES / CENTURY CRANES/ HI-TECH/ EDDY CRANES
14.	FORK LIFT TRUCKS (BATTERY OPERATED)	TIL LTD./ GODREJ/ VOLTAS
15.	FORK LIFT TRUCKS (DIESEL OPERATED)	TIL LTD./ GODREJ/ VOLTAS
16.	PNEUMATIC SAMPLE TRANSPORTATION SYSTEM	KERRY ENGINEERING/ JOST ENGINEERING/ KERRY DRYING & CONVEYING
17.	WEIGHING SCALE/PLATFORM SCALE (PORTABLE / GENERAL PURPOSE)	IPA PVT LTD. / AMETECH SYSTEMS PVT LTD. - PLATFORM SCALE ONLY/ STRATEGIC WEIGHING SYSTEMS LTD.(RICE LAKE WEIGHING SYSTEMS IND)/ AVERY INDIA LTD.
18.	SCISSOR LIFT TABLE	ACROW INDIA LTD. / ISHA ENGINEERING & CO - CAPACITY UPTO 3000 KG/ VANJAX SALES PVT LTD. / LIGHT LIFT INDUSTRIES
19.	WHEEL BARROWS	NILKAMAL LTD. / LIGHT LIFT INDUSTRIES
20.	STEEL RACKS	NILKAMAL LTD./ MEKINS INDUSTRIES LTD. - ALL TYPES OF STEEL RACKS/ SPACE MAGNUM EQUIPMENTS PVT LTD.
21.	PLASTIC CRATES	NILKAMAL LTD. / NILKAMAL CRATES AND BINS PVT. LTD. -INCLUDING BINS/ THE SUPREME INDUSTRIES LTD. -PLASTIC CRATE AND PALLETS

© 2022 MECON Limited All rights reserved

04.02 COMPONENTS		
1.	BEARINGS	TRUEFIT ENGINEERING- PLUMMER BLOCK (BEARING HOUSING & ACCESSORIES) / TIMKEN INDIA LTD - Bearings)Taper Roller Bearings & Roller Spherical Bearings Max 14.5 "(OD / NATIONAL ENGINEERING INDUS Bearings (Max OD 160 mm) ;Roll Neck Bearings (Max OD 200 Roller Bearings (Cylindrical- Max OD 110 mm) / ABC BEARINGS- Ball Bearings (Max ID 600 mm); Roller Bearings (Max ID 600 mm) / PRECISION BEARINGS- Ball Bearings (ZNL Make - Max ID 150 mm); Roller Bearings (ZNL Make- Max ID 150 mm) / BUMPER INDIA- Ball Bearing - Bearings Plain SphericalMax ID Make Mayfield)-Only 200 mm(/ ASIAN BEARING / NRB BEARINGS / MBM ENGINEERING-)Bearing Accessories like locknut, adapter sleeves , withdrawalsleeves, locknut ,lock washer & withdrawalnuts) / FKL INDIA PVT. LTD.- ROLLER BEARING (1) Spherical Roller Bearing Upto size 540 mm OD (2) Tapered Roller Bearing Upto size 320 mm OD (3) Cylindrical Roller Bearing Upto size 200 mm OD / NSK INDIA SALES COMPANY PVT LTD.- BALL BEARING (Size upto 45 mm ID); PLUMMER BLOCK (BEARING HOUSING & ACCESSORIES) / EASTERN BEARINGS PVT. LTD.- ROLLER BEARING Spherical Roller Bearings - OD up to 520 mm) /SKF / FAG / NTN / TORRINGTON / INA
2.	BRAKE- DCEM	ELECTRONIC & POWER CONTROL COMPANY / ELEKTROMAG DEVICES PVT LTD. / SPEED-O-CONTROLS PVT LTD. / BCH ELECTRIC LTD../ EMCO DYNATORQ PVT LTD. / INDUSTRIES SYNDICATE/ STORM CRAFT/ MAXX ENGINEERS/ PETHE/ KATEEL ENGINEERING/ EMCO GROUP
3.	BRAKE- ELECTRO HYDRAULIC THRUSTER	ELECTRONIC & POWER CONTROL COMPANY / ELEKTROMAG DEVICES PVT LTD. / SPEED-O-CONTROLS PVT LTD. / EMCO PRECIMA ENGINEERING PVT LTD./ KATEEL ENGINEERING INDUSTRY (P) LTD. / ELITE STEELS PVT LTD./ ELDRO/ SIME/ BUBENZOR/ SIBRE/ PETHE/ INDUSTRIES SYNDICATE/ ANAND SYSTEMS ENGINEERING PVT LTD. - HYDRAULIC THRUSTER BRAKE (Size - Drum diameter : 100 mm to 600 mm)
4.	CABLE REELING DRUMS	BENGAL TECHNOCRATS PVT. LTD./ ELEKTROMAG DEVICES PVT LTD./ MITOOL EQUIPMENTS PVT LTD.
5.	COUPLING- FLEXIBLE COUPLING (RESILIENT/GEAR)	GBM / ELECON / ALLIANCE ENGINEERING / SHANTHI GEARS / RATHI TRANSPOWER / BUDDHADEB ENTERPRISE / ESCO COUPLINGS AND TRANSMISSION /

© 2022 MECON Limited All rights reserved

		RATHI TURBOFLEX / FLEXER RUBBERS / REXNORD / SCHMIEDE AND MASCHINEN / KTR COUPLINGS / WELMAN WACOMA / FENNER (INDIA) / MACKEIL & COMPANY / HAMMERTECH ELECTRICAL CONTROLS / SELECT-N-DRIVE / FLEXOCON ENGINEERS / ESBI HIFLEX / MUKHERJEE ENTERPRISE / KAPSEK ENGINEERS / ROTEC TRANSMISSIONS /J.K.FENNER (INDIA)LTD. / MODERN ENGINEERING WORKS/PREMIUM TRANSMISSION LTD. / CONCORD / ROMA / NAW / HI-FLEX / FLENDER
6.	BARREL COUPLINGS (CRANE APPLICATION)	JAURE/ MALMADIE
7.	CRANE HOOKS	STEEL FORGING & ENGINEERING COMPANY / SARVODAYA FORGINGS/ HERMAN MOHTA / FREE TRADING CORPORATION
8.	CRANE LUBRICATION SYSTEM	CENLUB INDUSTRIES / KELVION INDIA PVT. LTD, (FORMALY GEA ECOFLEX INDIA PVT LTD.) / BRIGHT UP TECHNOLOGY PVT LTD. (FUTEC)
9.	CRANE RADIO-REMOTE CONTROL	LOTUS/ SATELOY (FINLAND)/ FUCK ELECTRONICS GMBH
10.	CRANE WEIGHING S YSTEM	IPA PVT LTD. / SCHENCK PROCESS INDIA LTD. / AMETECH SYSTEMS PVT LTD.
11.	ELECTRO-MAGNETIC DISC AND DRUM BRAKES	KATEEL ENGINERING INDUSTRY PVT LTD.
12.	GEAR BOXES (*)	KIRLOSKAR ELECTRIC COMPANY / KIRLOSKAR PNEUMATIC COMPANY (Custom Made) / INTERNATIONAL COMBUSTION (INDIA) (Standard) / SHANTHI GEARS / BONFIGLIOLI TRANSMISSIONS (Standard) / SEW- EURODRIVE INDIA (Custom Made) / NORD DRIVESYSTEMS (Standard) / ESSENTIAL POWER TRANSMISSION / TOP GEAR TRANSMISSIONS / ROSSI GEARMOTORS INDIA / SUMI-CYLCO DRIVE INDIA / AGNEE TRANSMISSIONS (INDIA) (Standard) / SAN ENGINEERING & LOCOMOTIVE CO (Standard) / SCHMIEDE AND MASCHINEN PVT LTD.- Standard & Custom Made limited to Max Gear Dia 1200 mm and Module 12) / PREMIUM TRANSMISSION / A.R. ENGINEERING WORKS / MACKEIL & COMPANY / MAGTORQ (Custom Made & Standard- Planetary Only) / CYCLO TRANSMISSIONS (Custom Made/ Standard – Planatory Drive & Cycloidal Drive) / PREMIUM ENERGY TRANSMISSION / VULCAN GEARS / DEE-KAY GEARS / LENZE MECHATRONICS / J.D.M GEARS & ENGINEERS / ROTEC

© 2022 MECON Limited All rights reserved

		TRANSMISSIONS / TRIVENI ENGINEERING AND INDUSTRIES / POWER BUILD PVT LTD. / ELECON / /NAW / GREAVES COTTON/ FLENDER
13.	GEARED MOTORS	KIRLOSKAR ELECTRIC COMPANY / INTERNATIONAL COMBUSTION (INDIA) / BONFIGLIOLI TRANSMISSIONS (UPTO 75KW) / SEW- EURODRIVE INDIA / ESSENTIAL POWER TRANSMISSION / ROSSI GEARMOTORS INDIA / LENZE MECHATRONICS /POWER BUILD PVT LTD. (UPTO 90KW) / PREMIUM ENERGY TRANSMISSION / MOTOVARIO GEAR SOLUTIONS/ NORD DRIVESYSTEMS / AGNEE TRANSMISSIONS (INDIA) / DEMAG/ IC BAUYER/ SUMI-CYCLO DRIVE (SUMITOMO)
14.	GRAB BUCKET (4-ROPE/ 2 –ROPE/HOOK ON)	ARMATIC/ ARUL GRAB PVT LTD./ SERVODAG PLANTS & EQPT
15.	LUBRICATION SYSTEM	CENLUB INDUSTRIES / KELVION INDIA PVT. LTD., (FORMALY GEA ECOFLEX INDIA PVT LTD.) / GRINDWELL NORTN / LINCOLN HELIOS / BIJUR DELIMON / SKF SYSTEMS / PRAKASH / AFMC / HYDAIR / LUBCON
16.	OIL SEALS	VACO / RUBBER EQPT. & ENGG / SEALJET INDIA / SEALPACK / CHAMPION SEALS / OMCO
17.	RAIL FIXING ARRANGEMENTS	GANT RAIL/ GANTREX/ GANTRY RAILING
18.	SLAB TONG/SHEET PACK LIFTER	ARMATIC ENGRS PVT LTD./ HEPPER STALL TECHNOLOGY AG/ BULK MATERIAL HANDLING EQUP CO LTD.
19.	SLEW RING BEARING	ROTHERDE/ SKF
20.	STEEL WIRE ROPE SLINGS	ASAHI ROPES PVT. LTD. / SPECIAL STEEL WIRE ROPES PVT LTD. (ALL TYPES AND SIZES)
21.	STEEL WIRE ROPE	BHARAT WIRE ROPES / ASAHI ROPES / SPECIAL STEEL WIRE ROPES / ORION ROPES / USHA MARTIN

© 2022 MECON Limited All rights reserved

05 ELECTRICAL

Sl. No.	ITEM DESCRIPTION	PREFERRED MAKES
ELECTRICAL		
1.	33KV, 11KV, 6.6KV OIL FILLED DISTRIBUTION TRANSFORMERS	CGL/ SCHNEIDER/ TRANSFORMERS & RECTIFIERS LTD/ KEC/ SUDHIR TRANSFORMER/ VOLTAMP/ BHARAT BIJLEE/ ANDREW YULE/ BHEL/ ABB/ EMCO/ INDOTECH/ ELECTROTHERM/ RAYCHEM RPG/ ESSENAR/ PAN-ELECTRO TECHNIC/ INDUSREE (UPTO 200KVA)
2.	ON LOAD TAP CHANGER FOR TRANSFORMER (OLTC)	EASUN MR/ MR GERMANY/ BHEL/ CTR /TRAFO MANUFACTURER'S APPROVED MAKE
3.	33KV, 11KV, 6.6KV DRY TYPE, DISTRIBUTION TRANSFORMERS	CGL/KEC/SUDHIR TRANSFORMER/ VOLTAMP/ BHEL/ SCHNEIDER/ AEP/ KAPPA/ TRANSCO INDIA/ INDCOIL/ INDUSHREE/ ABB/ MEGAWIN SWGR PVT LTD/ ANDREW YULE (UPTO 1000 KVA)/ RAYCHEM/ INDUSREE (UPTO 200KVA)
4.	NEUTRAL GROUNDING RESISTOR	S R NARKHEDE/ PEFCO/ RESITECH ELECTRICALS/ OHMARK CONTROLS
5.	DRY TYPE CONVERTER TRANSFORMER UPTO 3MVA	ABB/ KEC/ SCHNEIDER/ VOLTAMP/ BHEL/ BHARAT BIJLEE/ HOLEC/ INDCOIL/ CGL/ SUDHIRTRANSFORMER
6.	OIL TYPE CONVERTER TRANSFORMER	ABB/ KEC/ SCHNEIDER/ VOLTAMP/ BHEL/ BHARAT BIJLEE/ HOLEC/ INDCOIL/ CGL/ SUDHIR TRANSFORMER/ TRANSFORMERS & RECTIFIERS
7.	WTI & OTI	PERFECT CONTROLS/ PRECISION INSTRUMENTS/ SKII/ OSMA DIAL/ PRECIMEASURE
8.	BUCHHOLZ RELAY	PRAYOG/ ATVUS
9.	OIL LEVEL INDICATOR (MOG)	SUKRUT
10.	INSULATOR	ELPRO/ ALSTOM/ BHEL/ OBLUM/ LAMCO/ WS INDUSTERIES/ JAYSHREE INSULATORS/ ASSOCIATED PORCELEIN
11.	LIGHTING TRANSFORMER	BHEL/ SCHNEIDER/ CGL/ VOLTAMP/ KEC/SAI ELECT/ UNIVERSAL/ AE/ KAPPA/ INDCOIL/ INDUSHREE/ ABB/ INDUCTION ELECTRIC/ SUDHIR TRANSFORMER
12.	33KV, 6.6KV ISOLATOR/ HT LOAD BREAK SWITCH/ DISCONNECTOR	SIEMENS/A BOND STRAND/S&S CHENNAI/ ABB/ BHEL/ CGL/ OBLUM/ PANICKKER SWITCHGEAR/ DP
13.	33KV, 11KV, 6.6KV VACUUM CIRCUIT BREAKERS WITH PANELS (HT BOARD, HTMCC, CICO)	SIEMENS/ BHEL/ CGL/ SCHNEIDER/ ABB/ MEGAWIN (for CICO Panels only)/ L&T (up to 11kV)

© 2022 MECON Limited All rights reserved

Sl. No.	ITEM DESCRIPTION	PREFERRED MAKES
14.	HT BUSBAR SLEEVING (HEAT SHRINKABLE)/TAPPING	RAYCHEM
15.	6.6KV, 11KV VACUUM CONTACTORS & PANELS (HTMCC)	SIEMENS/ SCHNEIDER/ ABB/ BHEL/ CGL/ ANDREW YULE/ JYOTI/MEGAWIN (for CICO Panel only)
16.	33KV, 11KV, 6.6KV CURRENT TRANSFORMER (CT) & POTENTIAL TRANSFORMER (PT) (INDOOR)	PRAGATI/ INSTRANS/ PRAYOG ELECTRICAL/ ABB/ JYOTI/ KAPPA/ SCHNEIDER/ CGL/ MEHRU/ SIEMENS/ WABER-OERSTED/ AE/ SILKAANS/ MERLIN GREEN IMPORTED/AEP
17.	33KV, 11KV, 6.6 KV CURRENT TRANSFORMER (CT) & POTENTIAL TRANSFORMER (PT) (OUTDOOR OIL FILLED)	PRAGATI/ INSTRANS/ PRAYOG ELECTRICAL/ INSUTECH INDUSTRIES/ ABB/ JYOTI/ KAPPA/ CGL/ BHEL/ MEHRU/ WEBER-OERSTED/ TELK/ AE/ SILKAANS/ MERLIN GREEN IMPORTED/AEP
18.	33KV, 11KV AND 6.6KV CAPACITORS	ABB/UNISTAR (UNIVERSAL CABLES)/ BHEL/ KHATAU/ CGL/ SCHNEIDER/ ASIAN/ KAPSALES ELECTRICALS LTD/ SHREEM CAPACITOR PVT LTD/ POWERCAP CAPACITOR (MADHAB CAPACITOR)/SIEMENS/ EPCOS (Up to 11kV)
19.	33KV, 11KV AND 6.6KV REACTOR(AIR CORE)	QUALITY POWER ELECTRICALS EQUIPMENTS (P) LTD./ SHRIHANS ELECTRICALS/ CGL/ BHEL/ INTRA VIDYUT/ SCHNEIDER/ PS ELECTRICALS/ TRENCH ELECTRICS/ WESTERN HIVOLT/INDOCOIL
20.	33KV, 11KV AND 6.6KV SURGE SUPPRESSORS	OBLUM/ ELPRO/ WS-INSULATORS/ TOSHIBA/ SIEMENS/ MTL/ TELEMATIC/ TRANSTECTOR/ OBO BETTERMANN/ EXCO/ CGL/ GE/ ABB/ LAMCO/ JAYSHREE INSULATORS/ ARYCHEM/ AG/ SCHNEIDER
21.	33KV, 11KV, 6.6KV CABLE JOINTING KITS (HEAT SHRINKABLE TYPE)	RAYCHEM/ 3M/ CABSEAL/ DENSONS
22.	33KV, 11KV, 6.6KV CABLE END TERMINATION KIT	RAYCHEM/ 3M/ DENSON/ CABSEAL/REPL/ YAMUNAGASES
23.	BATTERY CHARGERS	CHHABI ELECTRICALS/HI-RECT/ SHERENE ELECTRO CONTROL/ AMARA RAJA/ HBL NIFE/ CLORIDE CONTROLS/ UNIVERSAL/ AE/ CALDYNE/ SAF-NIFE/ STATCON/ SIGNOTRON/ DUBAS/ SERVILINK ENGINEERS/ VERTIV ENERGY
24.	NI-CD BATTERY	SAF-NIFE/ PANASONIC/ AMCO/ HBL/
25.	LEAD-ACID/ VRLA/SMF BATTERY	EXIDE/ HBL/ AMAR RAJA/ AMCO/ PANASONIC/MICROTEC ENERGY PVT LTD
26.	PLANTE TYPE LEAD ACID BATTERY	EXIDE

© 2022 MECON Limited All rights reserved

Sl. No.	ITEM DESCRIPTION	PREFERRED MAKES
27.	ELECTRONIC ENERGY METERS (TRIVECTOR/ KWH)	SEMS/ L&T/ SATEC/ CONZERVE/ DUKATI/ ABB/ SIEMENS/ SCHNEIDER/ AE/ IMP/ MECO/ RISHABH/ ENDRIS/ SIMCO/BHEL/ REMCO/ DUKEARNICS/ RAIL/ EMERSON/ ELMEASURE/ SECURE/ ALLIED ENGINEERING WORKS
28.	PROTECTION RELAYS (MICROPROCESSOR BASED)	ABB/ SIEMENS/ SCHNEIDER/ EASUN REYROLLE/ L&T / ELMA SURE/ GE
29.	MAIN PROTECTION RELAYS (MICROPROCESSOR BASED) FOR HT SWITCH BOARD	ABB/ SIEMENS/ SCHNEIDER/ GE
30.	COMPOSITE MOTOR PROTECTION RELAYS FOR MOTOR ABOVE 110KW AND INCLUDING HT MOTOR	MICOM & MOT PRO OF AREVA/ MM-30 (MARKETED BY L&T)/ APAM OF ABB/ RHO OF EASUN REROLLE/ ABB/GE/SCHNEIDER/SIEMENS (LATEST VERSION)
31.	PROTECTION RELAYS/ AUXILIARY RELAYS (E/M)	ABB/ SIEMENS/ L&T/ SCHNEIDER/ C&S/ SEL/ GE/ EASUN REROYLLE/
32.	ANNUNCIATORS	MINILEC/SPA/PROCON/YASHMUN/PYROTECH/ APLAB/ SIEMENS/ L&T/ ADVANI OERLICON/ CONTROL DYNAMIC/ ELEMECH
33.	SINGLE PHASING PREVENTER	L&T/ MINILEC/ SIEMENS
34.	INDICATING METERS	IMP/AE/MECO/L&T/MOTWANI/CONZERVE/RISHAB INSTRUMENTS/SECURE METERS/ABB/ SIEMENS/ EMERSON/ RAIL/TOSHNIWAL INDIA/ ENERCON/SEMS/ ENDRIS/ SIMCO/ BHEL/ REMCO/ DUKEARNICS/ SCHNEIDER
35.	HT HRC FUSES	S&S/ GE POWER CONTROL/ BUSMANN/ SIEMENS/ ABB/ PANICKKER/ SCHNEIDER/ CGL/ L&T/ STANDARD/ HAVELLS/ D&P
36.	HV BUS DUCT	ECC/ KGS/ ENPRO/ BHEL/ CONTROL& SWITCHGEAR/ BRIGHT ENGG/ BUSBAR SYSTEM/ SPEARHEAD BUSDUCTS
37.	POWER CONTROL CENTRES/ LT SWITCHGEAR	SIEMENS/ L&T/ SCHNEIDER/ GE POWER/ CROMPTON/ ABB/ CONTROL & SWITCHGEAR/ ANDREW YULE /MEDITRON/ ELECTRO ALLIED PRODUCTS/ BCH/ UNILEC ENGINEERS/ ECC/ BALAJI ELECTRO CONTROL/ INTRELEC/VENUS CONTROL & SWITCHGEAR/ SANJAY TECHNICAL/ LOTUS POWER GEAR LTD./PYROTECH
38.	LT BUS DUCT	KGS/ ECC/ GE POWER/ CONTROL & SWITCHGEAR/ UNITED ELECTRIC/ UNILEC ENGINEERS/ BHEL/ MK ENGINEERS/ ELEMECH CORPORATION/ TRANSFORMERS & ELECTRICALS/ SPEARHEAD BUSDUCTS

© 2022 MECON Limited All rights reserved

Sl. No.	ITEM DESCRIPTION	PREFERRED MAKES
39.	INTELLIGENT MCC (DRAWOUT/ NON-DRAWOUT WITH INTELLIGENT CONTROLLER OFAPPROVED MAKE)/ IMCP/ CONVENTIONAL DRAW-OUT MCC	SIEMENS/ L&T/ SCHNEIDER ELECTRIC/ABB/ GE POWER CONTROL*/ CROMPTON*/ CONTROL & SWITCHGEAR*/ ANDREW YULE*/ TENCO SYSTEMS & SWITCHGEAR (*Only with approved Intelligent controllers - SIEMENS/SCHNEIDER/L&T/ ROCKWELL AUTOMATION/ABB)
40.	CONVENTIONAL MCC NON-DRAW OUT/MCP/RELAY CONTROL PANELS/AUX. CONTROL PANELS	SIEMENS/ L&T/ SCHNEIDER ELECTRIC/ ABB/ GE POWER CONTROL/ CROMPTON/ CONTROL & SWITCHGEAR/ ANDREW YULE/BCH/ENPRO/TECHNO COMMERCE/ SWITCHING CIRCUIT/ POWER & PROTECTION/ ECC/ HCE/ COSMIC POWER/ M.K.ENGINEERS MUMBAI/ VIJAY SWITCHGEARS VIZAG/ POWER MEDIA/ PEC ELECTRICALS/ RK ELECTRICS AUTOMATION/ UNILEC ENGINEERS/ LOTUS POWERGEAR/ RITTAL/ PYROTECH ELECTRONICS/ VEE CONTROLS/ POWER & PROTECTION/ VENUS CONTROL & SWITCHGEAR/SANJAY TECHNICAL/ CONTROL DEVICES/ RISHA CONTROL ENGINEERS/ SEN & SINGH ENGINEERS/ SELLWIN ELECTRICALS/ TENCO SYSTEMS & SWITCHGEAR/ AC POWER SYSTEM

© 2022 MECON Limited All rights reserved

Sl. No.	ITEM DESCRIPTION	PREFERRED MAKES
41.	MAIN LIGHTING DISTRIBUTION BOARD (MLDB)/LDB/SUB LIGHTING DISTRIBUTION BOARDS (SLDB)/ MCBDB/LOCAL CONTROL STATIONS/JUNCTION BOXES	ANDREW YULE/ BCH/ SCHNEIDER ELECTRIC/ HAVELLS/ STANDARD/ TRICOLITE/ ADVANCE POWER CONTROL/ CONTROL & SWITCHGEAR/ L&T/ SIEMENS/ GE POWER CONTROL/ ABB/ NGEF/ SWITCHING CIRCUITS/KMG A TO Z SYSTEMS/ SEN & SINGH ENGINEERS/TECHNO-COMMERCE/ POWER & PROTECTION/ ADLAC SYSTEM/ ECC/ MEDITRON/ CONTROL DEVICES/ TECHNOCRAT ENTERPRISES/ MDS/ HINDUSTAN CONTROL/ HCE/ COSMIC POWER/ M.K.ENGINEERS MUMBAI/ VIJAY SWITCHGEARS VIZAG/ POWER MEDIA/ PEC ELECTRICALS/ RK ELECTRICS AUTOMATION/ LALITHA ENGINEERING PVT LTD/HENSEL/ RITTAL/ NARBHERAM/ LOTUS POWERGEAR/ PYROTECH ELECTRONICS/ VEE CONTROLS/ VENUS CONTROL & SWITCHGEAR/ SANJAY TECHNICAL/ CONTROL DEVICES/ RISHA CONTROL ENGINEERS/ SELLWIN ELECTRICALS/ AC POWER SYSTEM/ SHRENIK & COMPANY (JB)/ PEPPERL+FUCHS (JB)/ DYNAMIC CONTROL/ TENCO SYSTEMS & SWITCHGEARS/ ROMA CONTAINERS (For LDBS)
42.	POWER DISTRIBUTION BOARDS (PDB)/ ROLL TABLE DISTRIBUTION BOARDS (RTDB)/ ISOLATOR BOXES(MCCB)/CRANE BAY POWER SUPPLY PANELS	ANDREW YULE/ BCH/ SCHNEIDER ELECTRIC/ HAVELLS/ STANDARD/ TRICOLITE/ ADVANCE POWER CONTROL/ CONTROL & SWITCHGEAR/ L&T/ SIEMENS/ ABB/ SWITCHING CIRCUIT/ KMG A TO Z SYSTEM/ SEN & SINGH ENGINEERS/ MEDITRON/ CROMPTON/ GE POWER CONTROL/ LOTUS POWER GEAR/ ELECTRO ALLIED PRODUCTS/ PYROTECH ELECTRONICS/ SIEMENS/ UNILEC/ VEE CONTROLS/ VENUS CONTROL & SWITCHGEAR/SANJAY TECHNICAL/ CONTROL DEVICES/ RISHA CONTROL ENGINEERS/ SELLWIN ELECTRICALS/ AC POWER SYSTEM/ DYNAMIC CONTROL/ TENCO SYSTEMS & SWITCHGEARS/ STATCON ENERGIAA/ POWER & PROTECTION/ PECON/ ECC/ PCE

© 2022 MECON Limited All rights reserved

Sl. No.	ITEM DESCRIPTION	PREFERRED MAKES
43.	MIMIC PANELS & ANNUNCIATION PANELS	L&T/ ADVANI OERLIKON/ GE POWER CONTROL/ BHEL/ BCH/ TRANSRECT/ MINILEC/ TIRUPATI ELECTRONICS/ ADVANCE POWER CONTOL/ CONTROL DEVICES/ AIM ENGG INDUSTRIES/ TECHNOCOMMERCE/ SWITCHING CIRCUITS/ CONTROL DEVICES/ VIDHYUT CONTROL/ MAKTEL CONTROL & SYSTEMS/ RISHA CONTROL ENGINEERS/ GEMCO CONTROLS POSITRONICS/ ELECTRO ALLIED PRODUCTS/ UNILEC/ POWER & PROTECTION/SELLWIN ELECTRICALS
44.	WELDING SOCKETS	CGL/ B&C/ BCH/ SCHNEIDER/ GE POWER/ HAVELL/ JAIBALAJI/ HENSEL/ MDS LEGRAND
45.	CONTROL DESK	SIEMENS/ ABB/ TECHNO COMMERCE/ TECHNOCRATS/ SEN & SINGH/ SWITCHING CIRCUIT/ POWER & PROTECTION/ L&T/ VAAY PRTECT/ SCHNEIDER/ LALITHA ENNG PVT LTD/ PYROTECH ELECTRONICS/ SANJAY TECH PVT LTD/ RISHA CONTROLS ENGG PVT LTD/ LOTUS POWER GEAR MOTOR/ MEGAWIN SWITCHGEAR PVT LTD/ RITTAL/ PYROTECH/ BCH/ AIM ENGG INDUSTRIES/ VIDHYUT CONTROL/ MAKTEL CONTROL & SYSTEMS/ GEMCO CONTROLS/ UNILEC/ OPG POWER SYSTEM/ POSITRONICS/ KMG A TO Z/ JOLLY ENGG/ PRAYAS AUTOMATION/ PRIMA AUTOMATION/ VEE VEE CONTROLS/ ZENITH CONTROLS/ CONTROL DEVICES/ SELLWIN ELECTRICALS/ DYNAMIC CONTROL
46.	SOFT STARTERS (Electronic Type)	ABB/ ROCKWELL AUTOMATION/ BHEL/ SIEMENS/ SCHNEIDER (Only for LT motors)/ CONTROL TECHNIQUE/ DANFOSS INDUSTRIES/ AMTECH ELECTRONICS/ TMEIC/ HITACHI
47.	SOFT STARTERS (FCMA Type)	INNOVATIVE TECHNOMICS/ DEN ENTERHUB
48.	MOTOR STARTERS	DYNAMIC CONTROL/ POWER & PROTECTION
49.	VFD FOR LT MOTORS(415V/690V)	ABB/ BHEL/ SIEMENS/ HITACHI HI-REL/ DANFOSS INDUSTRIES/ SCHNEIDER/ L&T (YASKAWA)/ ALLEN BRADLEY-ROCKWELL AUTOMATION/ TMEIC/ AMTECH/ EUROTHERM/ CONTROL TECHNIQUE/ AREVA/ DELTA ELECTRONICS (415V)/ CORONET ENGINEERING/ YASKAWA (415V)
50.	VFD FOR HT MOTORS MV DRIVE	ABB/ ROCKWELL AUTOMATION/ BHEL/ SIEMENS/ CONVERTEAM (UK)/ TMEIC

© 2022 MECON Limited All rights reserved

Sl. No.	ITEM DESCRIPTION	PREFERRED MAKES
51.	DIODE	HIND/ USHA RECTIFIERS/ BHEL
52.	SEMICONDUCTOR FUSE	FERRAZ/ BUSSMAN-COPPER
53.	THYRISTOR	SIEMENS/ BHEL/ HIND RECTIFIERS/ WEST CODE/ SEMICRON/ NELCO/ SCHNEIDER/ ABB/ XYS
54.	UPS	HITACHI-HI-REL/ EMERSON/ NUMERIC/ GE/ FUJI/ APC/ TATA LIBERT/ DUBAS ENGG/ DB POWER/ AE/ POWER ONE MICRO SYSTEMS/ LIVE LINE
55.	PROGRAMMABLE LOGIC CONTROLLER (PLC) INCLUDING DEVELOPMENT OF SOFTWARE	ABB (800 XA)/ SIEMENS (S7-400H)/ GE FANUC (PAC RX/3i)/ ROCKWELL AUTOMATION (Control logix)/ SCHNEIDER (M580)/ MITSUBISHI/ HONEYWELL (ML200R)/ FOX SOLUTIONS (S7-200 SMART, 300, 400, 400H, 1200, 1500, PCS7)/ YOKOGAWA (MICROPROCESSOR BASED CONTROLLERS)
56.	SERVER	IBM/HP/DELL
57.	PRINTER/SCANNER	HP/CANON/KYOCERA/ SAMSUNG/ BOTHER/ SHARP
58.	SCANNER	MASIBUS/ APLAB/ ECIL/ WAAREE/ M B CONTROL/ PROCON
59.	POWER SUPPLY UNIT	SIEMENS/ PHOENIX/ MTL/ P&F
60.	ETHERNET SWITCH	MOXA/ PHOENIX/ CISCO/ HIRSCHMANN/ 3-COM/ NORTEL/ FOUNDRY/ EXTREME
61.	CONVERTERS/ REPEATERS/ MODEMS/ RADIO MODEMS	MOTOROLA/ SIEMENS/ MULTI TECH/ US ROBOTICS/ ESTEEM/ LOTUS WIRELESS TECHNOLOGIES/ SATEL/ FUNK ELECTRONICS
62.	LARGE DISPLAY	SAMSUNG/LG/SONY/BARCO/ DELTA
63.	DESK FOR OPERATOR STATION	RITTAL/PYROTECH ELECTRONICS/ BCH
64.	CONTROL ROOM FURNITURE	GODREJ/PURCHASER'S APPROVED
65.	PANEL/ENCLOSURE FOR PLC/RIO	RITTAL/PYROTECH ELECTRONICS
66.	NOTE-BOOK/ HMI-PC	IBM/ HP/ DELL/ LENOVO/ TOSHIBA
67.	LAPTOP COMPUTER	HP/TOSIBHA/ IBM/ DELL/ LENOVO
68.	DATA CABLE/SPECIAL CABLES FOR DATA	AUTOMATION SYSTEM SUPPLIER'S APPROVED MAKE/ REFER SPECIAL CABLE
69.	CRANE CONTROL PANEL (ABOVE 50 T CRANES)	SIEMENS / ABB / SCHEIDER/ L&T
70.	CRANE CONTROL PANEL (50T & BELOW)	CRANE SUPPLIER'S (OEM)APPROVED VENDOR USING APPROVED COMPONENTS
71.	HOIST CONTROL PANELS	HOIST SUPPLIER'S (OEM) APPROVED VENDOR USING APPROVED COMPONENTS

© 2022 MECON Limited All rights reserved

Sl. No.	ITEM DESCRIPTION	PREFERRED MAKES
72.	MASTER CONTROLLER (STEP CONTROL TYPE)	EPCC/ INDUSTRIAL SYNDICATE/ STROM KRAFT/ SCHNEIDER/ ELECTROMAG/ SPEED-O-CONTROL/ SIEMENS/ EMM/ TELEMECHANIC/ KAKKU/ ELECTRONIC & POWER CONTROL
73.	RESISTANCE BOXES	EPCC/ ELECTROMAG/ BCH / SR NARKHEDE ENGG/ OHMARK CONTROL/ SIEMENS/ RESITECH/ ELECTRONIC & POWER CONTROL/ ENAPROS
74.	DOWN SHOP LEAD (DSL)	INDIA MILL STORE/INTERNATIONAL ENGG. PLANT/ENGG. SPARES OF INDIA/INSUTECH/ OEM's Approved Vendor
75.	CRANE DUTY POWER CONTACTOR	SIEMENS/ BCH/ C&S/ L&T/ TELEMECHANIC/ ABB/ SCHNEIDER
76.	SHROUDED BUS BARS	STROMAG/ SPEED-O-CONTROL/ VAHLE/ INSUTECH/ SAFETRACK/ ARMATIC
77.	PENDANT PUSH BUTTONS	BCH/HOIST/CRANE SUPPLIER'S (OEM) APPROVED VENDOR USING APPROVED COMPONENTS
78.	PUSH BUTTON STATIONS	CONTROL DEVICES/ RISHA CONTROL ENGINEERS/ SEN & SINGH ENGINEERS/ SELLWIN ELECTRICALS/ SHRENIK & COMPANY/ POWER & PROTECTION
79.	POWER PACK FOR MAGNETS	ELECTROMAG/ BCH/ EPCC (KAKKU)
80.	LIFTING MAGNETS	OHIO/ WALKER/ EPMS
81.	RADIO REMOTE CONTROL UNITS	CONTROL CHIEF/ STROMAG/ LOTUS WIRELESS (NBB)/ SATELOY (FINLAND)/ FUNK ELECTRONICS PICIORGROS, GmbH/ FOMOTECH/ ADVANCE RADIO CONTROL
82.	CABLE REELING DRUM	ELECTRO ZAVOD/ EMM/ ELEKTROMAG/ MITOOL EQUIPMENTS
83.	415V LT AIR CIRCUIT BREAKERS	L&T/ SIEMENS/ SCHNEIDER/ ABB/ GE POWER CONTROL/ CGL/ CONTROL & SWITCHGEAR/ MERLIN GERIN CONTROL & SWITCHGEARS/ BCH
84.	MOULDED CASE CIRCUIT BREAKER (MCCB)	SCHNEIDER-TELEMECHANIQUE/ L&T/ ABB/ SIEMENS/ GE POWER CONTROL/ BCH/ INDOKOP/ HAVELLS/ MDS (LEGRAND)/ CONTROL & SWITCHGEAR/ LG/ MERLIN GERIN/ ANDREW YULE & COMPANY
85.	MOTOR PROTECTION CIRCUIT BREAKERS (MPCB)	SCHNEIDER/ L&T/ ABB/ SIEMENS/ GE POWER CONTROL/ INDOKOP/ HAVELLS/ MDS (LEGRAND)/ CONTROL & SWITCHGEAR/ BCH/ MERLIN GERIN
86.	MINIATURE CIRCUIT BREAKER (MCB)	SIEMENS/ L&T/ GE POWER CONTROL/ SCHNEIDER/ STANDARD/ INDOASIAN/ HAVELLS/ MDS (LEGRAND)/ ABB/ INDOKOP/ CONTROL & SWITCHGEAR/ BCH/ MERLIN GERIN/ HPL INDIA

© 2022 MECON Limited All rights reserved

Sl. No.	ITEM DESCRIPTION	PREFERRED MAKES
87.	EARTH LEAKAGE CIRCUIT BREAKER/ RCCB	GE POWER CONTROL/ STANDARD/ HAVELLS/ ABB/ SIEMENS PROK DV/ SCHNEIDER/ MDS (LEGRAND)/ L&T/ INDOASIAN/ INDOKOP/ CONTROL & SWITCHGEAR/ BCH/ PRAYOG/ GUTS/ SECURE/ BENDER/ LITTLE FUSE/ MERLIN GERIN/ HPL INDIA
88.	HRC FUSE FOR LT APPLICATION	GE POWER CONTROL/ L&T/ SIEMENS/ INDO ASIAN/ HAVELLS/ STANDARD/ BUSSMAN/ CONTROL & SWITCH GEAR/ ABB/ ESSEN/ D&P/ S&S/ SCHNIEDER-TELEMACHANIQUE/CGL/ MERSEN INDIA
89.	SWITCH FUSE UNIT/COMPOSITE FUSE UNIT	SCHNEIDER/ SIEMENS/ L&T/ C&S/ CGL/ HAVELLS/ STANDARD/ GE POWER CONTROL/ ANDREW YULE/ C&S
90.	SPACE HEATER WITH THERMOSTAT	PYROX/ ASHOK
91.	POWER CONTACTOR/ AUX. CONTACTORS/RELAYS	ABB/ SIEMENS/ SCHNEIDER/ L&T/ GE POWER CONTROL/ CONTROL & SWITCHGEAR/ BCH/ CGL/ HAVELLS/ ANDREW YULE & COMPANY
92.	DC CONTACTOR	SIEMENS/ L&T/ BCH/ SCHNEIDER/ ABB/ CGL/ C&S/ BHEL/ CONTROL & SWITCHGEAR
93.	LT CAPACITORS	SCHNEIDER/ UNISTAR/ CGL/ ABB/ BHEL/ SIEMENS/ L&T/ MEHER/ POWER CAPACITOR (MADHAB CAPACITOR)/ KAPLES ELECTRICALS/ SHREEM CAPACITORS/ KHATAU/ GE POWER/ BHEL/ BCH
94.	VACUUM CONTACTOR	SIEMENS/ L&T/ ABB/ SCHNEIDER/ BHEL/ CGL
95.	ELECTRONIC OVER LOAD RELAYS (EOCR)	KILBURN/ BCH/ SIEMENS/ L&T/ SCHNEIDER-SAMWHA/ LSIS (LG)/ TELEMECHANIC
96.	THERMAL (BIMETALLIC) OVER LOAD RELAYS	BCH/ L&T/ SEIMENS/ SCHNEIDER/ ROCKWELL AUTOMATION/ ABB/ CONTROL & SWITCHGEAR/ GE POWER CONTROL/ ANDREW YULE/ CGL/ HAVELLS
97.	DIGITAL TYPE MULTI-FUNCTION METER	CONSERVE/ L&T/ SECURE/ RISHABH/ SIEMENS/ ABB/ ENERDIS/ SCHNEIDER/ EL MEASURE/ AEP/ SEMS/ SATEC/ NEPTUNE/ MECO/ ELECTRONIC AUTOMATION/ ELECON MEASUREMENTS/ SELEC CONTROLS
98.	ANEMOMETER	ADVANI OERLIKON
99.	RECORDING METERS	SEMS/ ABB/ ENERDIS/ CONZERV/ SIMCO/ BHEL/ REMCO/ DUKE ARNICS
100.	POWER MONITORS/POWER AND KVAR TRANSDUCERS	ENERIDS/ CONSERVE/ NEPTUNE/ RISHABH/ ABB/ AEP/ SIEMENS/ SCHNIEDER

© 2022 MECON Limited All rights reserved

Sl. No.	ITEM DESCRIPTION	PREFERRED MAKES
101.	CURRENT TRANSFORMER/ POTENTIAL TRANSFORMER (415V)	ABB/ JAYSHREE/ PRAGATI/ KAPPA/ INTRAVIDHYUT/ INDCOIL/ PRECISE/ AE/ SIEMENS/ SILKAANS/ WEBER-OERSTED/ SCHNEIDER/ BHEL/ PRYOG /CGL/ JYOTI/ TELK/ APAR INDUSTRIES/ ELMEX CONTROLS
102.	AMMETER/VOLTMETER	IMP/ AE/ MECO/ L&T/ MOTWANI/ CONZERVE/ RISHAB INSTRUMENTS/ SECURE METERS/ ABB/ SIEMENS/ EMERSON/ RAIL/ TOSHNIWAL INDIA/ ENERCON/ SCHNEIDER/ KAPPA/ SEMS/ ENERDIS/ SIMCO/ BHEL/ REMCO/ DUKEARNICS
103.	VOLTAGE/POWER/CURRENT/FREQUENCY/ ENERGEY TRANSDUCERS	ABB/ AEP/ SIEMENS/ SCHNEIDER
104.	INDICATING LAMPS (LED)	BINAY/ SIEMENS/ L&T/ ESSEN/ BCH/ VAISHNO/ TECKNIC/ OSRAM/ TELEMECANIQUE/ SCHNEIDER/ ESBEE/ CONTROL & SWITCHGEAR/ GE POWER CONTROL/ RASS/ TM/ ABB/ HOT LINE SWITCHGEAR
105.	PUSH BUTTONS	SALZER/ BCH/ L&T/ SCHNEIDER/ SIEMENS/ GE POWER/ VAISHNO/ CONTROL DEVICES/ ESSEN DEINKI/ TEKNIC/ CONTROL & SWITCHGEAR/ ESBEE/ VAISHNO/EE/ HOT LINE SWITCHGEAR/ ABB/ TELEMECHANIC/
106.	TIMERS & TIME DELAY RELAY	ABB/ BCH/ L&T/ GE POWER/ SIEMENS/ ESSEN/ ELECTRONIC AUTOMATION/ TELEMECANIQUE/ OMRON/ SCHNEIDER/ EE/ MDS LEGRAND/ EAPL/ NOVATEK ELECTRO
107.	THERMISTOR RELAY	SIEMENS/ MINILEC
108.	SELECTOR SWITCHES & CONTROL SWITCHES	ABB/ GE POWER CONTROL/ BCH/ EPCC/ KAYCEE/ SIEMENS/ TEKNIK/ L&T/CONTROL & SWITCHGEAR/ SCHNEIDER/ VAISHNO/ JYOTI/ SALZER/ STANDARD/ HHE/ SALZER/ HOT LINE SWITCHGEAR/ SWITRON DEVICE/ HPL INDIA/ RELIABLE ELECTRONIC COMPONENTS Pvt. Ltd./ ELECTRONIC & POWER CONTROL/ SWITRON DEVICES
109.	TERMINAL BLOCKS	EPCC/ ELMEX/ PHOENIX CONTACT/ CONNECT WELL/ ESSEN DEINKI/ WAGO/ LAPP/ S&S/ HANSEL/ TECHNO PLAST/ SCHNEIDER-TELEMECHANIQUE

© 2022 MECON Limited All rights reserved

Sl. No.	ITEM DESCRIPTION	PREFERRED MAKES
110.	SWITCH MODE POWER SUPPLY (SMPS)	SIEMENS/ IFM/ ROCKWELL AUTOMATION/ SCHNEIDER/ HONEYWELL/ ABB/ DELTA INDIA ELECTRONICS/ PYROTECH ELECTRONICS/ CONNECTWELL INDUSTRIES/ STATCON ENERGIAA
111.	TEMPERATURE SCANNER	ADVANI OERLIKON/ ECI/ INSTRUMENTATION LTD/ MASIBUS/ PYROTECH/ SIEMENS/ TOSHINWAL
112.	CONTROL TRANSFORMERS	AEI/ AEP/ VOLTAMP/ INTRAVIDYUT/ INDCOIL/ KAPPA/ INDUSHREE/ SIEMENS/ BCH/ UNITECH INDUSTRIES/ JYOTHI/ PRAGATI/ PRECISE/ UNIVERSAL MAGNETICS/ KALPA
113.	FLAME PROOF SWITCHES/SOCKETS/CONTROL STATIONS/LDB/JB	FCG FLAMEPROOF CONTROL GEAR/EX-PROTECTA/FLAME PACK/SHYAM SWITCH GEAR/ FLEXPRO ELECTRICALS/FLAMEPROOF EQUPT.PVT. LTD./ KAYSONS TECHNO EQUIPMENTS
114.	HT AC MOTORS (SQUIRREL CAGE/ SLIPRING & SYNCHRONOUS MOTORS)	MARATHON/ CGL/ KEC/ ABB/ BHEL/ JYOTI/ SIEMENS/ WEG/ TMEIC/ SCHNIEDER/ GE INDIA/ JEUMONT ELECTRIC INDIA PVT. LTD.
115.	LT AC SQUIRREL CAGE MOTORS	ABB/ BHARAT BIJLEE/ CGL/ KEC/ LAXMI HYDRAULICS PVT LTD./ MARATHON/ SIEMENS/ ELGI/ JYOTI/ WEG/ SCHNIEDER/ BHEL/ SUMO/ WERJ ELECTRICS/ GE INDIA
116.	RTD	PYROTECH/GEN. INTRU. CONSORTIUM/ WAIKA/PYRO ELECTRICS/TEMPSENS/ BAUMER TECHNOLOGIES/ THERMAL INSTRUMENT
117.	LT AC CRANE DUTY MOTORS	MARATHON/ KEC/ CGL/ SIEMENS/ ABB/BHARAT BIJLEE/ NGEF (upto 160 frame)/ LAXMI HYDRAULICS (upto 160L frame)/ AREVA
118.	DC ELECTROMAGNETIC BRAKES	ELECTRONIC & POWER CONTROL COMPANY
119.	LT AC ROLL TABLE MOTORS	KEC/ CGL/ ALSTOM/ ABB/ SEW/ IC-BAUER/ NORD/ SIEMENS
120.	LT AC GEARED MOTORS	LAXMI HYDRAULICS PVT LTD/ SEW/ NORD/ IC-BAUER/ POWER BUILD/ DEMAG/ ROSSI/ KEB, GERMANY/ LENZ MECHATRONICS (upto 37kW)/ SUMI CYCLO DRIVE/ KEC/ FLENDER/ NEW ALLENBURY WORKS/ GREAVES COTTON
121.	LT FLAME PROOF/ INCREASED SAFETY SQUIRREL CAGE MOTOR	MARATHON/ BHARAT BIJLEE/ CGL/ KEC/ LAXMI HYDRAULICS PVT LTD (Upto 225 Frame)
122.	ROLLING MILLMAIN DRIVE AC MOTORS	SIEMENS/ ABB/ TOSHIBA/ ALSTOM/ HITACHI/ WEG, BRAZIL

© 2022 MECON Limited All rights reserved

Sl. No.	ITEM DESCRIPTION	PREFERRED MAKES
123.	ACTUATOR MOTORS	AUMA/ ROTORK/ LIMITORQUE/ MARSH/ INSTRUMENTATION LTD./ ABB/ ANTRIB TECHNIK/ CONTINENTAL PROFILES LTD.
124.	PROXIMITY SWITCHES	ROCKWELL AUTOMATION/ SCHNEIDER/ TELEMECHANIQUE/ PYROTECH ELECTRONIC/ BCH ELECTRIC/ JAYASHREE/IFM/ SIEMENS/ SICK/ DELTA/ LINE& LEINDE
125.	LIMIT SWITCHES/SAFETY SWITCHES	SIEMENS/ ESSEN/ GE POWER/ SCHNEIDER-TELEMECHANIQUE/ BCH/ JAYSHREE/ EPCC (KAKKU)/ AG-MECHANIC/ INDUSTRIAL SYNDICATE/ L&T/ ELECTROMAG/ PROTOCONTROL/ SPEED-O-CONTROL/ BENGAL TECHNOCRATS/ ELECTRONIC & POWER CONTROL/ SICK/ IFM
126.	ROTARY LIMIT SWITCHES	EPCC (KAKKU)/ AG-MECHANIC/ TELEMECHANIQUE/ SCHNEIDER/ BENGAL TECHNOCRATS/ ELECTRONIC & POWER CONTROL/ JAYASHREE ELECTRO DEVICES/ SIEMENS/ JAI BALAJI CONTROL
127.	PULL CORD SWITCHES/ BELT SWAY SWITCHES/ZERO SPEED SWITCHES	JAYSHREE/ EPCC (KAKKU)/ AG-MECHANIC/ TELEMECHANIQUE/ STROMKRAFT/ PROTO-CONTROL/ PYROTECH/ AE/ ELECTRONIC & POWER CONTROL/ SAI CONTROL
128.	HOOTER/BUZZER/BELL/SIREN	KHERAJ/ EPCC(KAKKU)/ GETCO/ EDISION
129.	ELECTRONIC WEIGHING SYSTEM	ABB/ SCHENCK/ SARTORIOUS MECHATRONICS/ FL SMIDTH (TRANSWEIGH)/ METTLER-TOLEDO/ KLISTER-MORSE
130.	LOAD CELL	ACME/SCHENK PROCESS/SARTORIOUS/ MAKE FROM EUROPE&USA ORIGIN
131.	ENCODER/TACHO	IFM/ HUBNER/ HEIDENHAINE/ LEONARD/ ROCKWELL AUTOMATION (ALLEN BRADLEY)/ SICK (GERMANY)/ LEIN & LEINDE/ P&F/ SCHNEIDER/ VURLEY-TELEDYNE/DYNAPAR
132.	SENSORS/ SWITCHES * LIGHT BARRIERS * DISTANCE	IFM/ SICK/ ROCKWELL AUTOMATION/ PEPPERL + FUCHS/ SIEMENS/ SCHNIEDER/ DIMETIX AG/ DELTA
133.	SENSORS/ SWITCHES * ISOLATING BARRIERS * ZENER BARRIERS	PEPPERL + FUCHS/ EQUIVALENT
134.	VIBRATION MONITORING SYSTEM/ VIBRATION SENSORS	MASIBUS AUTOMATION AND INSTRUMENTATION/ EQUIVALENT
135.	PHOTO ELECTRIC SENSOR	SICK/ IFM
136.	**HT POWER, LT POWER & CONTROL CABLES**	

© 2022 MECON Limited All rights reserved

Sl. No.	ITEM DESCRIPTION	PREFERRED MAKES
137.	HT CABLES	UNIVERSAL CABLES/ RPG/ TORRENT/ POLYCAB(UPTO 33KV)/ PARAMOUNT/ KEI/ CCI/ FORT GLOSTER/ NICCO/ FINOLEX/ GUPTA POWER INFRASTRUCTURE LTD/ RAVIN CABLES/ UNIFLEX/ INDUSTRIAL CABLE/ ASIAN/ STERLITE TECHNOLOGIS (UPTO 33kV)/ CRYSTAL CABLES (UPTO 33KV) / APAR INDUSTRIES / GEMSCAB (UPTO 11KV)/ CMI
138.	LT POWER CABLES (PVC/ XLPE)	UNIVERSAL/ RPG-KEC CABLES/ POLYCAB/ FINOLEX/ TORRENT/ HAVELLS/ KEI/ SPECIAL CABLES/ RALLISON/ PARAMOUNT/ CORDS/ LAPP/ CHANDRESH/ RAVIN/ CCI/ FORT GLOSTER/ FINECAB/ RADIANT/ DYNAMIC CABLE/ IMT/ GUPTA POWER INFRASTRUCTURE/ SARK CABLE/ SKYTONE ELECTRICALS/ FORTUNE ART/ THERMO CABLE/ GOVIND CABLES/ INSUCON CABLES/ EPSILLON CABLES/ POWER FLEX/ TEMPSENS INSTRUMENTS/ ROLLIFLEX/ SUYOG ELECTRICALS/APAR INDUSTRIES/ CORDS CABLE / ECKO CABLES/ CHANDRESH CABLES/ GEMSCAB/ ALLIED ENGINEERING WORKS/ ZENIUM CABLES/ CMI/ PI SQUARE CABLES/ RAVI INDUSTRIES
139.	LT CONTROL CABLES	LAPP/ UNIVERSAL/ RPG-KEC CABLES/ POLYCAB/ FINOLEX/ TOSHNIWAL/ DELTON/ KEI/ SPECIAL CABLES/ RALLISON/ PARAMOUNT/ CORDS/ HAVELLS/ RAVIN/ CCI/ IGUS/ FORT GLOSTER/ THERMOPAD/ EPSILLON/ IMT CABLES/DYNAMIC CABLE/ THERMO CABLE/ GOYOLENE/ POWER FLEX/ TEMPSENS INSTUMENTS/ ELKAY TELELINKS/ SUYOG ELECTRICAL/ APAR INDUSTRIES/ CORDS CABLE / ECKO CABLES/ CHANDRESH CABLES / INSUCON CABLES / GEMSCAB/ ALLIED ENGINEERING WORKS/ ZENIUM CABLES/ CMI/ PI SQUARE CABLES/ RAVI INDUSTRIES
140.	HEAT RESISTANT CABLES (EPR/ CSP & SR)	LAPP/ UNIVERSAL/ RPG-KEC/ FINOLEX/ TOSHNIWAL/ DELTON/ TORRENT/ SPECIAL CABLES/APAR INDUSTRIES/ CORDS CABLE/ KRISHNA ELECTRICAL INDUSTRIES/ RAVIN CABLES/ CHANDRESH CABLES/PRESTIGE CABLE INDUSTRIES/ NANGANWALAIMPEX/ ADVANCE CABLE / GUPTA POWER INFRASTRUCTURE/ GEMSCAB/ APAR INDUSTRIES/ ZENIUM CABLES/ TEMPSENS INSTUMENTS
141.	TRAILING CABLES	LAPP/ UNIVERSAL/ RPG-KEC

© 2022 MECON Limited All rights reserved

Sl. No.	ITEM DESCRIPTION	PREFERRED MAKES
142.	LIGHTING COPPER CABLES/WIRE (PVC) FRLS	DELTON/ FINOLEX/ UNIVERSAL/ HAVELLS/ INCAB/ KEI/ GEMSCAB/ PARAMOUNT/ POLYCAB/ RAVICAB/ RAJANIGANDHA/ KALINGA/ KEI/ SPECIAL CABLES/ NETCO/ RALLISON/ HAVELLS/ ECKO/ AJANTA ELECTRICS/ SBEE CABLES/ CHANDRESH/ MESCAB/ SUYOG ELECTRICAL/ ECKO CABLES/ CMI/ PI SQUARE CABLES
143.	OPTICAL FIBRE CABLE	MOLEX/ LUCENT/ FINOLEX/ ERICSON/ STERLITE/ HFCL/ OPTEL/ RPG/ AT&T/ UTP/ APAR INDUSTRIES/ KEC INTERNATIONAL (INCLUDING JELLY FILLED CABLES)
144.	FLEXIBLE CABLES	KEI/ GOVIND/ SPECIAL CABLES/ RAJNIGANDHA/ APAR IND./ CORDS/ RAVIN/ SERVEL/ ECKO CABLES/ SHYAM CABLES/ CHANDRESH CABLES/ BCH/ PRESTIGE/ CENTURION POWER CABLE/ UNIED CABLE INDUSTRIES/ NANGANWALA IMPEX/ INSUCON/ UNIVERSAL CABLES/ GEMSCAB/ RPG-KEC/ POLYCAB/ ZENIUM CABLES/ CMI/ TEMPSENS INSTRUMENTS/ PI SQUARE CABLES
145.	SCREENED CABLES	REFER INSTRUMENTION LIST/ ELKAY TELELINKS / CORDS CABLE/ INSUCON CABLES & CONDUCTORS/ TEMPSENS INSTRUMENTS/ RAVI INDUSTRIES
146.	COMPENSATING CABLES	CORDS CABLE/ TEMPSENS INSTRUMENTS
147.	TELECOM CABLES	ELKAY TELELINKS (INCLUDING JELLY FILLED CABLES) / KEC INTERNATIONAL (INCLUDING JELLY FILLED CABLES)
148.	AERIAL BUNCHED CABLES	ALLIED ENGINEERING WORKS/ CMI/ RAVI INDUSTRIES
149.	COAXIAL CABLES	ZENIUM CABLES
150.	CABLE DRAG SYSTEM	IGUS/ KABEL SCHLEP/ CAVOTEC
	ILLUMINATION SYSTEM EQUPT	
151.	LEDLIGHT FITTING (FIXTURES) COMPLETE WITH ALL ACCESSORIES	BAJAJ/ CROMPTON/ GE LIGHTING/ PHILIPS/ SIGMA/ HAVELLS/ OSRAM/ WIPRO/ SSK/ HALONIX TECHNOLOGIES/ SURYA/ PYROTECH ELECTRONICS
152.	AVIATION LIGHTS/ PANELS	BINAY/ SCHNEIDER-TELEMECHANIQUE/ GE/ BCH
153.	STREET LIGHT POLES	BAJAJ ELECTRICALS/ UNIQUE ELECTROTECH PVT. LTD., PUNE/ K.L. INDUSTRIES, MUMBAI/ RIDHI POLES PVT. LTD., VADODARA/ TUBE POLES, MUMBAI/SUBHAM POLES/ PHILIPS/ CGL/ GE/ WIPRO/ TRANSRAIL/ ASTER TELESERVICES/ SKIPPER LIMITED (TUBULAR TYPE)

© 2022 MECON Limited All rights reserved

Sl. No.	ITEM DESCRIPTION	PREFERRED MAKES
154.	HIGH MAST TOWERS	PHILIPS/ BAJAJ ELECTRICALS/ CROMPTON/ GE/ BP PROJECTS/ WIPRO/ TRANSRAIL/ ASTER TELESERVICES/ SKIPPER LIMITED
155.	5/15A PIANO SWITCH	ANCHOR/ ELLORA/ MDS LEGRAND/ CONA/ PRECISION/ CRAB TREE
156.	DECORATIVE SWITCHES & SOCKETS	ANCHOR/ LISHA
157.	PHOTO ELECTRIC CELL/NATURE SWITCH	KAKATIYA ENERGY SYSTEMS PVT. LTD., HYDERABAD/ ADVANCE ELECTRONICS, KOLKATA
158.	SWITCH SOCKET OUTLET	ALSTOM/ ANCHOR/ BCH/ CGL/ ESSEN/ BEST & CROMPTON/ SCHNEIDER
159.	SINGLE PHASE EXHAUST FANS/CEILING FANS	CGL/ CINNI/ KHAITAN/ POWERVENT/ VENTWELL/ BAJAJ/ USHA/ ORIENT/ HAVELLS
	ERECTION MATERIALS	
160.	DOUBLE COMPRESSED CABLE GLANDS	LAPP/ HANSEL/ PHOENIX/ COMET/ PRECISSION-QUALITY/ SUNIL & CO./ ELECTROMAC/ HMI/ CCI/ DOWELLS/ COSMOS/ JANSON/ CGS/ KAYSONS TECHNO EQUIPMENTS
161.	TRANSMISSION LINE HARDWARE	KLEMMAN ENGG/ ASBESCO/ DESCON LTD/ MLIND ENGINEERING/ EXALT ENGINNERING/ RASHTRAUDYOG LTD
162.	CABLE LUGS	DOWELLS/ ISMAL/ JAISON/ COMMET/ CONNECTWELL/ PHOENIX/ MG ELECTRICA
163.	GI CABLE TRAYS	RUKMANI ENTERPRISES/ VATCO ELECTRIC POWER/ PATNI SYSTEM/INDIANA CABLE TRAYS/ ADVANCE POWER PRODUCT/ INDIA ELECTRICALS SYNDICATE/ RABI ENGG. WORKS/ RATAN PROJECT & ENGG. CO/ TECNO FAB MANUFACTURING/ UNITECH FABRICATOR & ENGINEERING/ GS ENGINEERS/ MAHAVIR ENGG/ SHERA TUBE FORGE/ INDMARK/ SUMIP COMPOSITES (FIBRE GLASS TYPE)/ SATNAM COMPOSITES (FRP TYPE)/ ADITYA STEELS INDUSTRIES
164.	GI PIPES	TATA/ ZENITH/ JINDAL/ GSI/ SWASTIK/ AMBICA/ BHARAT/ SURYA PRAKASH/ INDUS TUBE
165.	MS PIPES	MAHARASTRA SEAMLESS/ELECTRO STEEL CASTING/SAIL/JINDAL SAW/ TATA/ITC
166.	PVC CONDUITS/CASING & CAPPING	MODI/ UNIVERSAL/ ATUL/ BAJAJ PLAST/ PREMIER/ SUDHAKAR/ FINOLEX/ ASTRAL-FLOWGUARD/ KISSAN/ SUPREME/ PRINCE/ RELINCE/ GARWARE/ GEROGE FISHER/ GODAVARI

© 2022 MECON Limited All rights reserved

Sl. No.	ITEM DESCRIPTION	PREFERRED MAKES
167.	GI CONDUITS	ZENITH/ JINDAL/ TATA/ SAIL
168.	EARTHING MATERIALS	REPUTED MAKE WITH ISI CERTIFICATION/ RUKMANI ELECTRICALS & COMPONENTS
169.	EARTHING RESISTOR	BHEL/BCH/RESISTECH/NARKHADE
170.	LIGHTNING ARRESTORS	ABB/ OBLUM/ CGL/ ELPRO/ SCHNEIDER/ WS-INSULATORS/ LAMCO/ JAYSHREE INSULATORS
171.	INSULATING MATS FOR DIFFERENT VOLTAGE GRADE	REPUTED MAKE WITH ISI CERTIFICATION
172.	SAFETY ITEMS – HAND GLOVES, SHOCK TREARMENT CHART ETC.	REPUTED MAKE WITH ISI CERTIFICATION
173.	CABLE FIRE SEALING COMPOUNDS	LLOYD INSULATIONS/ EQUIVALENT
	FDA, CCTV, PA & TELECOM EQUIPMENT	
174.	FDA SYSTEM SUPPLIERS	AGNICE FIRE PROTECTION LIMITED/ TECHNICO (INDIA) PVT. LIMITED./FIRE PRO SYSTEMS LTD./ TYCO/ SIEMENS/ HONEYWELL AUTOMATION/ STERLING & WILLSON/ BHARTIYA CACCIALANZA/ PUSHKAR&CO/ASCENT/ADVANTAGE
175.	FDA SYSTEM EQUIPMENT (UL/FM/ULC/LPCB/VDS APPROVED)	SIMPLEX/ NOTIFIER/ EDWARDS/ SIEMENS/ HONEYWELL (ESSER, XLS 3000)/ SCHRACK SECONET / BOSCH
176.	LINEAR HEAT SENSING CABLE (UL/ FM/ULC/LPCB/VDS APPROVED)	KIDDE/ LGM/PATOL/ SYSTEM SENSOR
177.	VIDEO DISPLAY UNIT INCLUDING PC, MONITOR, PRINTER FOR FDA.	DELL/ HP/ HCL/ WIPRO/ IBM/ LENEVO/ PYROTECH ELECTRONICS (For VDU)/ DELTA ELECTRONICS (For VDU)
178.	FDA CABLES	USHA BELTRON/ HCL/ DELTON/ VINDHYA TELELINK/ UNIVERSAL/ FORT GLOSTER/ INCAB/ INDUSTRIAL/FINOLEX/NICCO
179.	IP-PBX EQUIPMENT	CISCO/ TADIRAN/ NEC/ AVAYA/ ALCATEL/ MITEL-AASTRA/ UNIFY
180.	EPABX & HAND SET	INDIAN TELEPHONE INDUSTRIES LTD/ SIEMENS/ ALCATEL/ BPL TELECOM/ AVAYA/ CISCO/ NEC/ UNIFY/ TADIRAN
181.	POWER SUPPLY UNIT	AMARA RAJA/PULSE POWER/SIGNOTRON
182.	BATTERY	AMARA RAJA/ EXIDE
183.	CCTV SYSTEM SUPPLIERS	NELCO LIMITED/ POWER SYSTEMS LTD., KOLKATA/TOSHNIWAL INDUSTRIES/ PANORAMA ELECTRONICS PVT LTD/ HONEYWELL AUTOMATION/ STERLING & WILLSON/ TOSHNIWAL/ PUSHKAR&CO/ASCENT/ADVANTAGE

© 2022 MECON Limited All rights reserved

Sl. No.	ITEM DESCRIPTION	PREFERRED MAKES
184.	CCTV SYSTEM	BOSCH/ PELCO/ HONEYWELL/ SONY/ PANASONIC/ AXIS/ ADOR/ INDIGO VISION/ PYROTECH ELECTRONICS/HANWHA
185.	CCTV MONITOR	SHARP/ HITACHI/ PHILIPS/ LG/ SONY/ SAMSUNG/ SANYO/ PANASONIC/AXIS/ADOR/INDIGO VISION/ PYROTECH ELECTRONICS (For VDU)/ DELTA ELECTRONICS (For VDU)
186.	PA SYSTEM SUPPLIERS	POWER SYSTEM/PUSHKAR&CO/ASCENT/ADVANTAGE/OEM's System Developer
187.	PA SYSTEM EQUIPMENT	BOSCH/ BYTE COMMUNICATION/ HCL/ PHILIPS/ MOTWANI PVT LTD/ ZENITEL/ PHI-AUDIOCOM/ MEGA
188.	TELEPHONE CABLE	DELTON CABLES/ FINOLEX/ CMI/ ELKAY TELELINKS/ HCL/ RELIANCE/ RPG/ UNIFLEX/ KRONE/ D-LINK/ MOLEX/USHA MARTIN/ NETCO/ KEI/ SPECIAL CABLES/ SERVEL
189.	TELEPHONE CABLE TERMINATION BOX	KRONE
190.	VHF SYSTEM	MOTOROLA/ YAESU/ VERTEX–STANDARD/ SIMOCO/KENWOOD
191.	CCTV CABLES	POLYCAB/FINOLEX/THERMOCABLE/SUYUG / SERVEL

NOTE:

For those equipment's whose makes are not indicated above,prior approval of Purchaser/Consultant shall be obtained.

© 2022 MECON Limited All rights reserved

06 INSTRUMENTATION

Sl. No	ITEM DESCRIPTION		*LIST OF MAKES*
A.	**Field Instruments:**		
1.	Pressure Gauge, Differential Pressure gauge&its accessories	:	WIKA, Forbes Marshall, Gauges Bourdon, Thermal Instruments, Baumer, Walchandnagar (Tiwac Div.), Goa Thermostatic, Radix, Standard Instruments
2.	Pressure / Differential Pressure switch (Mech. Type).	:	WIKA, Switzer, Indfoss, Gauges Bourdon, Baumer
3.	Pressure / Differential Pressure switch (Electronic Type).	:	Ifm, WIKA, Turck, KaustubhaUdyog
4.	Pressure / Differential Pressure/ Flow (DP type)/ Level (DP type)/ Temperature Transmitter	:	Emerson, Fuji (except TT), Honeywell, Yokogawa, Siemens, Nivo Controls (except TT)
5.	Temperature gauge &thermowell	:	WIKA, Gauges Bourdon, Thermal Instruments, Baumer, Walchandnagar (Tiwac div.), Forbes Marshall, Goa Instruments, Goa Thermostatic, Radix, Standard Instruments
6.	Thermocouple, RTD&thermowell	:	Gauges Bourdon, Thermal Instruments, Toshniwal Industries, Tempsens, Pyro-electric Instruments, Baumer, Temcon, Goa Instruments, Standard Instruments, Radix, Altop
7.	Temperature Switch	:	Ifm, WIKA, Switzer, Goa Instruments
8.	Rotameter	:	Forbes-Marshall, Instrumentation Engineers, Eureka instruments, Scientific Devices.
9.	Orifice Plate & flanges Assembly,Venturi, Flow nozzle, Wedge flow element	:	Engineering Specialities, Hydro-pneumatics, Micro-precision, Chemtrols-Samil, Minco Flow Element, Minco India, Unicontrols, ABB (Wedge flow only), DynaFluid, Eureka Industrial (Orifice assembly only)
10.	Averaging Pitot Tube,Annubar	:	Emerson, Engineering Specialities, Hydro-pneumatics, Minco India, Unicontrols, DynaFluid
11.	Flow Switch (Mech. Type).	:	Forbes-Marshall, Magnetrol, D.K.

© 2022 MECON Limited All rights reserved

Sl. No	ITEM DESCRIPTION		*LIST OF MAKES*
			Instruments, Switzer, Levcon
12.	Flow switch (Electronic Type).	:	Ifm, Magnetrol, D.K. Instruments, Nivo Controls,Turck India, E&H
13.	Electromagnetic flow meter	:	Yokogawa, Emerson, Siemens, Endress& Hauser, Forbes-Marshall, NivoControls
14.	Vortex Flow meter	:	Yokogawa, Forbes–Marshall, Endress& Hauser, Siemens, ABB
15.	Mass (coriolis) flow meter	:	Emerson, Yokogawa, Forbes–Marshall, Endress& Hauser, Rockwin
16.	Ultrasonic Flow meter	:	Yokogawa, Forbes–Marshall, Endress& Hauser, Siemens, Eureka Industrial
17.	PD/Turbine Flow meters	:	Daniel (Emerson), Bopp & Reuther (Toshniwal), Liquid Controls, Rockwin
18.	Level gauge (tubular, magnetic, reflex type)	:	Gauges Bourdon, Chemtrol, Magnetrol, Baumer, Techtrol, Sigma Instruments, V Automat, DK Instrument, Nivo Controls
19.	Level Switch (Conductivity type)	:	SB Electro-mechanical, Techtrol, Nivo Controls, EIP, Sapcon, V AUTOMAT
20.	Level Switch (Capacitance/RF type)	:	Endress& Hauser, SB Electro-mechanical, Techtrol, Nivo Controls, Sapcon, V AUTOMAT, EIPEnviro, Protocontrol
21.	Level Switch (Tuning fork/ Rod type)	:	Vega, Endress& Hauser, Nivo Controls, S.B. Electro-mechanical, Sapcon
22.	Level Switch (Float type)	:	D K Instruments, Chemtrols, V AUTOMAT, Gauges Bourdon, Sigma Instruments, Baumer, Scientific Devices, SB Electromechanical
23.	Level Switch/ Transmitter (Displacer type)	:	Emerson, D K Instruments, Levcon Instruments, Trac
24.	Level Switch/ Transmitter (Ultrasonic type)	:	Vega,Endress& Hauser, Siemens, Forbes-Marshall, Magnetrol, SB Electromechanical
25.	Level Switch/ Transmitter (Radar type)	:	Vega, Endress & Hauser, Emerson (Rosemount), Siemens, Forbes- Marshall
26.	Level Switch/ Transmitter (Nucleonic type)	:	Dr. Berthold, VEGA, E+H

© 2022 MECON Limited All rights reserved

Sl. No	ITEM DESCRIPTION		*LIST OF MAKES*
27.	Level switch (Electro- mech type)	:	D.K.Instruments, TRAC, LEVCON, VAUTOMAT, Forbes Marshall
28.	Control valve (Globe/Ball/V-Notch/Angle) along with Pneumatic Actuator & Pneumatic Positioner (non-smart)	:	Fisher, Instrumentation Ltd, Masoneilan (Dresser Industries), Flowserve (Valtek), Samson Controls, Arca (Forbes Marshall), MIL Controls, Introl (RK Controls), Metso, Virgo (only ball type), Elomatic, Uniflow Control Instruments Pvt. Ltd., Dembla, Severn Glucon
29.	Control valve (Butterfly) along with Pneumatic Actuator & Pneumatic Positioner (non-smart)	:	Fisher (Emerson), Instrumentation Ltd, Dembla (Except for power cyllinder actuators), Fouress, Metso, Severn Glucon (India), Elomatic,Uniflow Control Instruments Pvt. Ltd. (wafer type only &upto 900mm size)
30.	Electrical Actuator	:	Limitorque, Rotork, Bernard (Instrumentation Ltd), Marsh, Auma, Metso
31.	Electro-hydraulic actuator	:	Reineke, Rexa
32.	I/P converters	:	Fisher, Shreyas-Barton, Masoneilan (Dresser Industries), Forbes Marshall, Marsh-Bellofram, MIL controls, Watson Smith, YOKOGAWA
33.	Smart positioner	:	Fisher, Masoneilan (Dresser Industries), Siemens, Samson Controls, Metso, Flowserve (Valtek), Yokogawa
34.	Solenoid Valve	:	Herion, Burkert, Rotex, Asco, Avcon, Festo, Precision Instruments, IMI Norgren
35.	Air filter regulator	:	IMI Norgren, Placka, Schrader-Schovill, Asco, Fisher
36.	Fittings (compression & pipe) & valves	:	Swagelok, Parker, Excel-Hydro-pneumatics, Hylok, Fluid Control, DynaFluid, Flowtech
37.	SS Impulse Tubes & CS Impulse pipes	:	Sandvik, MJ Patel, Noble Tubes, Allied Steel, SAIL Maharastra Seamless (P) Ltd, Reliable Steel (Reliable Pipes & Tubes ltd).
38.	Junction box (other than FF/Profibus)	:	Rittal, FCG, Baliga, Ex-Protecta, P&F, Protocontrol

© 2022 MECON Limited All rights reserved

Sl. No	ITEM DESCRIPTION		*LIST OF MAKES*
39.	Junction box (FF/Profibus)	:	P&F, Turck, Phoenixcontact, Siemens
40.	Instrumentation Cable (Screened, paired, triad- signal, control, power etc.) (other than FF/Profibus/ Modbus)	:	Delton, Thermopads, KEI industries, Lapp cables, Cords cables, Elkay Telelinks, TCL Cables, BELDEN, KEC, Insucon, Thermocables, Ocean cables, Pagoda cables, Special Cables Pvt. Ltd.
41.	Thermocouple Compensating Cable	:	Toshniwal Cables, Delton, Cords cables, Lapp cables, TCL Cables, Thermopads, BELDEN, Temcon, Thermopads, Tempsens, Associated cables
42.	FF/Profibus/ Modbus cables	:	BELDEN, LEONI, LAPP Cables
	Control room Instrumentation	:	
1.	Programmable Logic Controllers	:	Refer Electrical part of the Make list
2.	Digital Indicator	:	Pyrotech Electronics, Masibus Instruments, Honeywell, TIPL, Yokogawa, Forbes Marshall, Ashe Control
3.	Bargraph Indicator/ Totaliser	:	Masibus Instruments, Pyrotech Electronics, Yokogawa, Honeywell, Ashe Control
4.	Recorders (Chart Less)	:	Yokogawa, Chino, Honeywell, Siemens, ABB.
5.	Microprocessor based controller	:	Yokogawa, Honeywell, Fuji, Toshiba, Foxboro
6.	Digital scanners	:	Micro systems, Masibus Instruments, Procon, TIPL
7.	DC Power Supply Unit	:	Aplab, Phoenix, Elnova, Siemens, Schneider, Pepperl& Fuchs, MTL, Cosel
8.	IS Interface/Zenner Barrier	:	Pepperl& Fuchs, MTL, Stahl, DEHN
9.	Signal isolators	:	Pepperl& Fuchs, MTL, Yokogawa, Phoenix, Radix
10.	Annunciation system	:	Procon, Micro Systems & Controls, Minilec, Pyroelectric, MB controls & Systems, DIGICONT
11.	Instrument Panels/ Cabinets/ Control Desk	:	Rittal, Pyrotech, Hoffmann

© 2022 MECON Limited All rights reserved

Sl. No	ITEM DESCRIPTION		*LIST OF MAKES*
C.	**Analytical / Special Instruments**	:	
1.	Gas analysis Instruments (including CEMS)	:	ABB, Emerson, Siemens (Adage), Sick, Fuji, Yokogawa, Servomex, Fuji (AICPL), Forbes Marshall
2.	Gas analysis components	:	Besides the following make, components of OEM supplier of analyser, can also be considered ➢ Solenoidvalve:Herion(Germany),Burket(Germany),GEMU ➢ Sample gasPump&Peristaltic Pump:KNF(Germany), ASFThomas (Germany), Buhler,CharlesAustin ➢ Rotameter/PurgeRotameter:Krohne(Germany),FPR(Austria),ABB(Germany) ➢ ProbeFilter:SSThyssen(Germany),Schumacel(Germany),ABB(Germany) ➢ Heatedsampletube-prefabricated:Thermon(USA), Thermopads ➢ Condensatemonitor:Buhler ➢ PTFEtube&PVDFfittings:Emtechnik(Germany) ➢ SStubes: Sandvik ➢ SS tubes fittings & valves : Swagelok, Parker ➢ Pressure gauge: WIKA ➢ PLC/Microprocessor based control system: Rockwell, ABB, Siemens, Yokogawa
3.	Stack Flow meter (Ultrasonic/ IR type)	:	Siemens (Adage), Sick, Forbes Marshall (Codel), Fuji, Teledyne, Thermo-scientific
4.	Gas Detectors including portable detector	:	Beiler& Lang (CO-Monitor), Draeger, MSA, Oldham (Industrial Scientific Corporation), Detronics,
5.	Dust Monitor/ SPM analyser	:	Durag, Codel (Forbes Marshall). Sick, Siemens (Adage)
6.	Calorific Value analyzers/ Woobe Index meter	:	Reineke, Union, Yokogawa, Siemens (Adage)
7.	Moisture Analyzers (Nucleonic)	:	Dr. Berthold
8.	Moisture Analyzers (Infra Red)	:	Moist Tech, EMC Electronics (NDC)

© 2022 MECON Limited All rights reserved

Sl. No	ITEM DESCRIPTION		*LIST OF MAKES*
9.	Moisture Analysers (on line air/ gas)	:	Foxboro, Bartec, GE-Panametrics
10.	SWAS Analyzer	:	Forbes Marshall, Emerson, Yokogawa
11.	ORP/PH/ Conductivity meter / Transmitter	:	Emerson, Forbes Marshall, Yokogawa, ABB, HACH
12.	BOD/COD/TSS analyzer	:	Emerson, Forbes Marshall, HACH, Yokogawa, ABB, Honeywell, Teledyne
13.	Dissolved Oxygen analyzer	:	Forbes Marshall, Yokogawa, HACH, Emerson
14.	Turbidity meter	:	Forbes Marshall, Yokogawa, ABB
15.	Flame Detector	:	Honeywell, Durag Instruments
16.	Electronic Boiler drum level indicator	:	Hitech, Hydrastep (Solatron), BHEL, Yarway
17.	Vibration sensors/ transmitters	:	GE Bentley Nevada, IRD (Mechanalysis India), Bruel&Kjaer, Schenck-Avery, SPM Instruments, SKF, Shinkawa, Forbes-Marshall, Rockwell Automation, Masibus
18.	Vibration monitoring system (Turbo-supervisory system)	:	GE Bentley Nevada, IRD (Mechanalysis India), Bruel&Kjaer, Shinkawa (Forbes-Marshall), Rockwell Automation
19.	Infrared radiation pyrometer	:	Land, Raytek, Ircon, Keller HCW, Williamson, Chino, FLUKE
20.	Dip lance type Molten metal temperature measurement system & T/C Tips	:	Hauser Electronite, Ferrotran, Sidermes
21.	Density meter (Nucleonic)	:	Dr. Berthold, Thermo Fisher Scientific, Endress& Hauser, VEGA
22.	Elemental Analyzer	:	Sodern France (Pananalytic), Thermo Fisher Scientific, Real Time Australia (Vishwa Microprocessors), Scantech Australia, Sabia USA
23.	Particle size Analyzer	:	Pananalytic, Outotec, Beckman Coulter, Sympatec(JicoMeasurematics), Thermo Fisher Scientific.
24.	Slurry Density Meter	:	Kansal, Thermo Fisher Scientific, Wess, Vega (DP type), Smar (DP type), Rhosonics, RGI Germany -Nucleonic(

© 2022 MECON Limited All rights reserved

Sl. No	ITEM DESCRIPTION		*LIST OF MAKES*
			JicoMeasurematics)
25.	Lightning / Surge protection device	:	P&F, MTL, DEHN
D.	**Erection Contractor**	:	Elmatics Engineers Pvt. Ltd., Paradigm Engineers and Consultants Pvt. Ltd., Konstelec Engineers Pvt. Ltd., Jasubhai Engineering Pvt. Ltd.
E.	**Testing & Calibration instruments**	:	
1.	4-1/2 Digit Digital Portable Multimeter	:	Fluke, Yokogawa, Philips
2.	Milli volt/ Milliamp Feed & Measure	:	Fluke, Yokogawa, Philips,Beamex, Druck, Scandura
3.	Portable Temperature Calibrator	:	Druck, Scandura, Beamex, Tempsens, Masibus, Nagman
4.	Portable Pressure Calibrator with pumps	:	Druck, Scandura, Beamex, Masibus, Nagman
5.	HART/ Fieldbus configurator	:	Emerson, Fuji, Honeywell, Yokogawa, Siemens
6.	Universal Calibrator	:	Druck, Scandura, Beamex
7.	Insulation Tester	:	Motwane, Fluke, Extech, Megger
8.	Digital Storage oscilloscope	:	Phillips, Hewlett Packard, Yokogawa, Tektronix, Aplab
9.	Soldering & Desoldering Station	:	Q Max, Weller
10.	Vacuum Cleaner	:	Eureka Forbes, BPL,Philips
11.	Tools & tackles	:	Taparia, Everest
12.	Radiation Survey Meter/ Dosimeter	:	Fluke, RAE Systems, Thermo Fisher Scientific, Thermo Electron Corporation, LudLum
13.	Test bench (Pneumatic/ Electronic)	:	Masibus, Nagman, GE, Yokogawa

© 2022 MECON Limited All rights reserved

07 FIRE PROTECTION SYSTEM

Sl No.	Item Description	Preferred Make
1	Cable coating (Fire resistant Paint)	Vijay System, 3M, Hilti, KBS, Promat
2	Fire Barrier System	MTL, P&F, Vijay System, 3M, Hilti, KBS, Promat
3	Fire Door	Madhu Industries, Sen Harvic, AGEW, Hopes Metal, Multiwyn, NCL Seccolor Ltd., Signum, Vijay System, UL Listed manufacturer with CBRI Roorkee test certificate

08 LEVEL-II AUTOMATION

Sl. No.	Description	Make
A	**Hardware**	
1	Server Computers	IBM/HP/DELL
2	Client Computers (PC), LAPTOP	LENOVO/HP/DELL/TOSHIBA
3	Laser Printers	HP/CANON/KYOCERA
4	DMP Printers	TVS/WIPRO/EPSON
5	Appliance based firewall	CISCO/NORTEL/IBM
B	**Network Equipment**	
1	Active components	CISCO/FOUNDRY/NORTEL/3COM/EXTREME
2	Passive components	LUCENT/AMP/MOLEX/KRONE/DLINK
C	**Software**	
1	Mail server software	MICROSOFT/IBM
2	Network Management Software	IBM/HP/CA
3	Antivirus Software	TREND MICRO/SYMANTEC/E TRUST /MCAFEE/KASPERSKY
4	Firewall	MICROSOFT/CHECK POINT/IBM
5	Application software including Process control models	TECHNOLOGY SUPPLIER
D	**Rack**	VALRACK/RITTAL/HCL/PRESIDENT
E	**Local UPS**	EMERSON/APC/NUMERIC/ LIVE LINE/ HIREL.

© 2022 MECON Limited All rights reserved

09 HYDRAULICS & LUBRICATION

SL. NO.	ITEM	MAKE	
1.	**Hydraulics**		
a.	Medium Pressure / High Pressure Hydraulic System	Rexroth / Parker / Eaton/Yuken	
b.	Piston / Vane Pumps	Rexroth / Parker / Eaton/Yuken	
c.	Hydraulic Motor	Rexroth / Parker / Eaton/Hagglunds	
d.	Gear Pump (Low Pressure)	Del Pd Pumps (ROTODEL) / IMO / Tushaco / Rexroth / Parker	
e.	Screw Pump (Low Pressure)	Imo / Alweiler / Nortek / Tushaco	
g.	Hydraulics Proportional Valve	Rexroth / Parker / Eaton/Yuken	
f.	Hydraulic Servo Valve	Rexroth / MOOG	
h.	Accumulator with Safety Shut-Off Block	Hydac / Parker Olear	
i.	Accumulator Charging Kit	Hydac / Parker Olear	
j.	Pressure Filter	Hydac (Germany) / Pall / Internormen / Parker/Rexroth	
k.	Return Filter	Hydac (Germany) / Pall / Internormen / Parker/Rexroth	
l.	Heat Exchanger	Alfa Laval / Tranter/GEA	
m.	Level Indicator	Levcon / Buhler / Techtrol / Wika / Dr. Tiefenbach / Rexroth / Parker	
n.	Level Switch	Shridhan / Stauff / Dr. Tiefenbach / Buhler / Techtrol	
o.	Pressure Gauge & Temperature Gauge	Wika / Forbes Marshall / Stauff / Hydac	
p.	Pressure Switch	Rexroth / Hydac / Parker / Danfoss	
q.	Air Breathers	Stauff / Parker / Hydac	
r.	Contamination Analysis Kit	Pall / Parker (UCC)	
s.	Centrifuge	Alfalaval / Westfalia	
t.	Vacuum Dehydrator	Pall / Parker / Nortek	
u.	Electrostatic Liquid Cleaner	Ferrocare	
v.	Mobile Motorised Pump – Motor – Filter unit for oil filling	Pall / Eaton / Parker / Hydac / Stauff/Rexroth	
w.	Nitrogen Booster Station	Hydac / Parker	
x.	HP Nitrogen Compressor	J.A. Beckar Shone	
2.	**Oil lubrication System**		
a.	Oil lubrication System	Lincoln Helios / Shaan Lube / Bijur Delimon/CENLUB SYSTEMS	
b.	Electrical Heater	Escorts / Alco / Nortek/ThermoPads	
c.	Basket Filter	Pall / Boll & Kirch	
d.	Heat Exchanger	Alfa Laval / Tranter/GEA	
e.	Control Valve	Forbes Marshall (Arca) / Samsung / Fisher /SEVERN GLOCON	
f.	Expansion Joint	Esbi / Stanflex / Elaflex	
g.	Air Breathers	Stauff / Parker / Hydac	
h.	Level Indicator	Levcon / Buhler / Techtrol / Wika / Dr.	

© 2022 MECON Limited All rights reserved

		Tiefenbach	
i.	Level Switch	Shridhan / Stauff / Dr. Tiefenbach / Buhler / Techtrol	
j.	Level Indicator Cum Switch	Stauff / Wika / Dr. Tiefenbach / Buhler/Techtrol	
k.	Pressure Gauge & Temperature Gauge	Wika / Forbes Marshall / Stauff	
l.	Pressure Switch	Rexroth / Hydac / Parker / Danfoss	
m.	Thermostat	Switzer / Hydac / Stauff / Danfoss	
n.	Differential Pressure Gauge / Switch	Wika / Switzer / Hydac / Danfoss / ABB / Endress Hauser	
o.	Pressure Transmitter	Fisher / Forbes Marshall / Endress Hauser / Emerson	
p.	Temperature Transmitter	Fisher / Forbes Marshall / Endress Hauser / Emerson	
q.	Flow Switch	Forbes Marshall / Endress Hauser / Kobold	
r.	Pressure Reducing Valve	Fisher / Forbes Marshall / Samsung	
s.	Water Sensor (On tank)	ASI Casitrol / Nortek / Parker	
t.	Centrifuge	Alfalaval / Westfalia	
u.	Vacuum Dehydrator	Pall / Parker / Nortek	
v.	Mobile Motorised pump – Motor – Filter unit for oil filling	Pall / Hydac / Eaton / Parker / Rexroth	
w.	Flow Meter cum Totalizer	Rockwin / Forbes Marshall	
x.	Water in Oil Detector (Drip leg)	Parker / ASI Casitrol	
3.	**Air-Oil System (Complete Unit)**	Rebs / Nortek	
4.	**Grease Lubrication System (Complete Unit)**	Lincoln Helios / Bijur Delimon / Nortek/CENLUB SYSTEMS	
5.	**Descaling System**		
a.	Centrifugal Pump for Descaling System	KSB / Halberg	
b.	Piston Pump for Descaling System	Uraca / Wepuko	
c.	Air / Gas Safety Relief Valve	L&T / Fainger / Mankenberg	
d.	Spray Valve For Descaling System	Hauhinco / Hunt / Elwood / OH DE High Pressure Technologies	
e.	Accumulator for Descaling system	WSR (Germany) / BHPV / ISGEC	
f.	HP Compressor	Imgersoll Rand / J.A. Beckar Shone	
g.	Auto Back Wash Filter	Boll & Kirch / Hydac	
h.	Spray Nozzles	Lechler / Spraying System	
6.	**Air Controls (All Components)**	Ross / SMC / Parker / Festo / Rexroth	

7.	**Water Pipework**		
a.	Centrifugal Pump (12 bar & below)	KSB / Grundfos / Kirloskar / Voltas	
b.	Auto Back Wash Filter (Cartridge type)	Boll & Kirch / Hydac	
c.	Air release Valve	Upadhyay / Steam & Mining / BDK	
d.	Basket Strainer for water	Superflo / Hydac / Boll Filter	

© 2022 MECON Limited All rights reserved

8.	**Manual Valve**		
a.	Manual Gate / Globe Valves With & Without Gear For High pressure Application	KSB / BHEL / AUDCO / Fouress/SEVERN GLOCON	For Oil Lubrication & Descaling Systems
b.	Manual Gate / Globe Valves With & Without gear For Low pressure Application (16 Bar & Low)	KSB / Audco / Fouress / VOLTECH/Microfinish	For Oil Lubrication Systems and Water Pipework
c.	Butter Fly Valve	Audco / Crane/Virgo/ SEVERN GLOCON/ Stanfford Controls	For Water Pipework
d.	Ball Valve	Audco / Fouress / Hydac/ Microfinish/ Virgo / VOLTECH	For Hydraulic & Pneumatic Systems and Water Pipework
e.	Actuators for operating Valve	L&T / Rotex/EL-O-Matic(Emerson)	For Oil Lubrication & Pneumatic Systems and Water Pipework
f.	Check Valve (Disc Type) – Low Pressure	Audco / BDK / Fouress/KSB / VOLTECH	For Oil Lubrication Systems & Water Pipework
g.	Check Valve (Spring Loaded) – Low Pressure	Audco / BDK / Fouress/VOLTECH	For Oil Lubrication Systems and Water Pipework
h.	Check Valve (Spring Loaded) – High Pressure	Audco / KSB / Fouress	For Descaling & Pneumatic Systems
9.	**Pipes / Tubes**		
a.	Carbon Steel Seamless Pipes / Tubes	Jindal / Maharashtra Seamless / MJ Patel / Indian Seamless / Parker (Imported) / Ratandeep / Soor Neogi/ Anand Seamless/ Indian Seamless	For Hydraulic, Oil Lubrication, Grease & Pneumatic Systems and Water Pipework
b.	Stainless Steel Seamless Pipes / Tubes	Jindal / Ratnamani / Choksi Tubes / MJ Patel / Parker (Imported) / Ratandeep / Soor Neogi/ Remi/Vishal Steel / Shekasa Engg./ Shubh Laxmi Metal	For Hydraulic, Oil Lubrication, Grease & Pneumatic Systems and Water Pipework
c.	Carbon Steel ERW – SAW Pipes / Tubes	Jindal SAW / MJ Patel / SAIL (RSP) / MANN / Well Span / Tata / Ratandeep	For Hydraulic, Oil Lubrication, Grease & Pneumatic Systems and Water Pipework
d.	Pipes / Tubes Fitting (‘O’ Ring type)	Hyd – Air / Hyloc Hydro Technic / Project Tooling System / Parker / Avit/ GEM Engg./J.J. Hydraulics	For Hydraulic, Oil Lubrication, Grease & Pneumatic Systems and Water Pipework
e.	Pipes / Tubes Fitting (Ferule type)	Hyd – Air / Project Tooling System / Parker / Avit / Hyloc Hydro Technic/GEM Engg./J.J.	For Hydraulic, Oil Lubrication, Grease & Pneumatic

© 2022 MECON Limited All rights reserved

		Hydraulics	Systems and Water Pipework
f.	Butt Weld Pipe / Tube Fittings (Carbon Steel & Stainless Steel)	MS Fittings / NL Hazra / MJ Patel / Tube Bends/Hyd-Air/Sarda Pipes & Fittings	For Hydraulic, Oil Lubrication, Grease & Pneumatic Systems and Water Pipework
g.	Polypropylene Clamp, Aluminium Clamps	Stauff / Hyd-Air Engg. / J.J. Hydraulics	For Hydraulic, Oil Lubrication, Grease & Pneumatic Systems and Water Pipework
h.	U - bolts	HICO Multifin Products Pvt. Ltd. / Project Tooling	For Oil Lubrication & Grease System and Water Pipework
i.	Hose with end fitting	Hydrokrimp / Indo Industrial / Superseals / Parker / Aero Quip / Rexroth /India Flex/ GATES India/ WINTEC Hose / Poly Hose / J.J. Hydraulics/ Vision Engineer	For Hydraulic, Oil Lubrication, Grease & Pneumatic Systems and Water Pipework
j.	Flanges	Echjay / NL Hazra / MS Fittings / MJ Patel / Tube Bends/Hyd – Air/ Sarda Pipes & Fittings	For Hydraulic, Oil Lubrication, Grease & Pneumatic Systems and Water Pipework
k.	SAE Flange	Avit / Parker / Hyloc / Stauff/ Hyd- Air / J.J. Hydraulics	For Oil Lubrication, Hydraulic & Pneumatic Systems
10.	**Common Facilities for all Oil Cellars & Hydraulic Room**		
a.	Submersible Type Sump Pump	KSB / SU Motors / Grundfos / Kishore Pumps	
b.	Chain pulley blocks & Hand operating traveling cranes	Batliboi / Morris / WH BRADY & CO / INDEF	
10.	**First Fill & Flushing Oil**		
a.	Lubricating Oil	Indian oil / HP / BP / Mobil Exxon/Balmer Lourie	For Oil Lubrication, Hydraulic & Pneumatic Systems
b.	Hydraulic Oil	Indian oil / HP / BP / Mobil Exxon/Balmer Lourie/ APAR/ HARDCASTLE PERTOFER (Fire Resistant)	For Hydraulic Systems
c.	Flushing Oil	Indian oil / HP / BP / Mobil Exxon/Balmer Lourie	For Oil Lubrication, Hydraulic & Grease Systems
d.	Grease	Indian oil / HP / BP / Mobil Exxon/ Balmer Lourie	For Grease Systems

© 2022 MECON Limited All rights reserved

10. CIVIL

General

The makes and manufacturers shall be from the following list and read along with GTS-13. In case same is not available in the market or in case of change in trade name, equivalent makes / re-designated manufacturer shall be used with prior approval of Engineer In charge.

Sl. No.	MATERIALS	MANUFACTURERS
A	**Anti Termite Treatment**	
1.	Anti Termite Treatment	M/s. Pest Control India ltd., M/s. Mysodet Pvt. Ltd
B.	**Concrete & Masonry works**	
1	Cement	ACC, Ultratech, Grasim, Dalmia
2	Reinforcement Steel / Structural Steel	SAIL, RINL, Tata Steel, IISCO,JSPL,SHYAM
3	Admixtures for concrete (Plasticisers and Water proofing compounds),	SIKA, FOSROC, PIDILITE, MYK, STP,CRYSO
4	White Cement	Birla White, JK White Cement, The India Cement
5	PVC Water Stops	Basecon, Asian Engg. Product, Capnhans India, , Fixopan, Pidilite
C	**Flooring**	
1	Vitrified Tiles	Restile, Kajaria, Somany, RAK, HR Johnson,Asian,Nitco,Morbito
2	Acid Alkali Proof lining / tiles	Restile, Johnson (Endura), Good earth or approved equivalent make
3	Metallic Floor Hardener	M/s. Triveni Color Industries (Floornet) M/s. Heatly & Grasham (India) Ltd. M/s. De-Rust Chemical Corporation of inida (Ferronite) M/s. Cement Research Corporation Pvt. Ltd. (Stilonite)
4	Non Metallic Floor Hardener	Fosroc, Sika, Pidilite, Cryso
5	Ceramic Tiles	Johnson, Somany, Kajaria, NITCO, Orient bell
6	False floor/ Raised access floor	Unitile, Hifloor or equivalent
7	Sunken Portion Treatment	Choksey, Sika, Pidilite, STP,MYK
8	PVC/ Vinyl Flooring	Premier Vinyl Flooring, Responsive Flooring, Armstrong, Polyflor, Wonderfloor.
9	Epoxy Floor	Pidilite, Fosroc, Asian Paints, Sika, Tremco, BASF, MYK
10	Polyurethane Flooring	MYK, Fosroc, Berger, Tremco

© 2022 MECON Limited All rights reserved

Sl. No.	MATERIALS	MANUFACTURERS
D.	**Wood Works**	
1.	Laminates, Veneer	Formica, Decolam, Century, Merino, Greenlam, Durian
2.	Pre-Laminated Particle Board/ Particle Board	Greenply, Kitlam, Bhutan Board, Indian Plywood Mfg, Co. Ltd., Indian Wood and Wood Products, Mangalore, Mysore Plywood Limited, M/s Western India Plywood, Orchid Ply
3.	Flush Door Shutters (Exterior Grade)	Kitply, Green Ply, Kutty Flush Doors, Anchor
4.	Ply Board	Greenply, Kitply, Century or approved equivalent make
5.	Prelaminated MDF Board	Mangalam Timber (Dura Tuff), Century, Action TESA, Archidply or approved equivalent make
8.	Dry wall partition	Saint gobain, USG Boral or approved equivalent make
9	Cement Fibre Board	Everest, Visaka, NCL(Bison)
E.	**Steel Works**	
1.	M.S. Pipe	Jindal Hisar, Kalinga, TATA
2	Metal Fire Check Doors	Godrej, Shakti Met-dor or approved equivalent make
3	Stainless Steel Bolts, Screws, Washers, Nuts	Kundan, Puja, Atul or approved equivalent make
4	Stainless Steel Pipes/Flats	Jindal, Salem Steel or approved equivalent make
5	Dash Fasteners/Anchor bolts for door, windows fixing	Hilti, Fischer, Bosch, WURTH
F.	**Aluminium Works**	
1	Aluminium Sections and fittings	Bhoruka, Hindalco, Jindal
2	Aluminium Composite Panel	Alstrong,Alpolic,Alucobond, Aludecor, Aalutuff
3	E.P.D.M. Gaskets	Anand Reddiplex, Enviro Seals or approved equivalent make
G.	**Fittings & Fixtures**	
1	Doors & Windows Fixtures / Fittings	Everite, Hardwyn, Earl Bihari, Garnish, Godrej, Secur Industries, Hafele,ebco
2	Stainless Steel Door handles, butt hinges (with and without ball bearings), Floor stoppers, Cabinet handles, knobs	Kich, Dorma, Ozone, Godrej, ebco
3	Stainless Steel Tower bolts, Sliding	Kich, Dorma, Ozone, Godrej, ebco

© 2022 MECON Limited All rights reserved

Sl. No.	MATERIALS	MANUFACTURERS
	Bolts	
4	Door Closer / Floor spring	Hardwyn , Dorma, Godrej, Ozone
5	Door Locks	ACME, Godrej, Harrison, PAG, Hafele, Doorset
6	Stainless Steel Friction Stay	Securistyle, Hafele, Dorma, Hettich, Kich
7	Stainless Steel –Glass handles	Kich, Dorma, Ozone, Godrej
8	Stainless Steel Handrails, Balustrade	Kich, Ozone, Godrej
H	**PVC Doors/ Windows**	
1.	PVC Doors	Duroplast, ACCUCEL, Rajshri
2.	UPVC Doors /windows	Duroplast, NCL Veka, Rehau, Fenesta, Kommerling
I.	**Painting Works**	
1	Synthetic Enamel Paints	Berger, Asian Paints, Nerolac, Dulux, Shalimar
2	Oil Bound Distemper	Asian paints, Berger, Nerolac, Jenson & Nicholson, Shalimar.
3	Cement Paint	Snowcem, Berger, Kansai Nerolac, Asian Paints
4	Exterior and Interior Acrylic Emulsion Paint	Dulux, Asian paints, Berger, Snowcem, Nerolac
5	Epoxy Paint	Nerolac, Shalimar, Asian Paints, Huntsman
6	Wall Putty	Birla White, JK White, The India Cement
7	Primers	Dulux, Asian paints, Berger, Snowcem, Nerolac
J.	**Glass**	
1	Clear Float Glass / Toughened Glass/ Reflective Glass/ Mirror	Modiguard, AIS (Asahi), Saint Gobain Glaverbel, Glavermas
K.	**False Ceiling Works**	
1	False ceiling – Gypsum Board System	USG Boral, Gyproc or approved equivalent
2	False ceiling – Aluminium Panel System	Hunter Douglas (Luxalon), Armstong, Interarch
3	False Ceiling - Calcium Silicate Board	Aerolite, Ramco-Hilux, Metroc
L.	**Sealants**	
1	Polysulphide sealant/Silicon Sealant	Pidilite, Fosroc, Choksey, Sika Degussa , Dow Corning
M.	**Expansion Joint Treatment**	
1	Expansion Joint Treatment	M/s.Shalitex, M/s. Pidilite Industries M/s. Sika

© 2022 MECON Limited All rights reserved

Sl. No.	MATERIALS	MANUFACTURERS
		M/s.Shalimar Tar Products
N.	**Water Proofing Treatment**	
1	Polymer based cementitious waterproofing treatment, Elastomeric membrane waterproofing treatment, Polypropylene Polymeric (APP) membrane waterproofing treatment, waterproofing with bimumen felt etc.	BASF, SIKA, FOSROC, STP, BITUMAT, Asian Paint, MYK, Cryso, Pidilite or approved equivalent.
O.	**Sanitary & Plumbing Works**	
1	Vitreous China Sanitary ware	Hindware, Parryware, Kohler, Geberit, Jaquar, Cera
2	White Glazed Fire Clay Sink	Cera, Neycer, Hindware, Parryware
3	Stainless Steel Sink	AMC, Nirali, Jayna, Kaff
4	Plastic Seat Cover of E. W.C.	Commander, Bestolite, Jaquar, Hindware, Parryware, Kohler,
5	C.P. Fittings mixer / pillar taps, washers, C.P. Brass accessories	Jaquar, MARC, Roca, Kohler, Geberit, Nirali, JAL
6	Centrifugally / Sand Cast iron pipes & fittings & fixtures (IS 3989/1729)	NECO, Electrosteel or approved equivalent make
7	G.I. Pipes	Tata, Jindal or approved equivalent make
8	G.I. Fittings	Unik, K.S., Zoloto–M or approved equivalent make
9	Gunmetal Valves	Zoloto, Leader, Sant
10	CP Brass stop Cock& Bib Cock	Jaquar, Ess Ess, MARC, Kohler
11	Ball valve with floats	Zoloto, Leader, Sant, Jayco
12	PTMT fittings, fixtures & accessories	India Prayag, JAL
13	CPVC Pipe	Ajay, Finolex, Astral
14	C.I. Manhole Covers	RIF, NECO, BIC
15	PVC Water Tank	Sintex, Polycon, Infra, Supreme or approved equivalent make
16	Mirror	Atul, Modi Guard, Saint Gobain or approved equivalent make
17	Hand Drier	Kopal, Automat, Euronics or approved equivalent make
18	UPVC Rain Water Pipes	Supreme, Finolex, Kisan, Ashirwad, Astral
19	C.I. Pipes Class LA and fittings	Keso-spun, supra, Electrosteel or approved equivalent make
20	UPVC/HDPE Pipes & fittings	Finolex, Astral, supreme, oriplast, Ashirwad
Q.	Boom barrier	Gandhi Automation, Neptune Automatic, Somfy india, Maple Leaf Electrovacs &

© 2022 MECON Limited All rights reserved

Sl. No.	MATERIALS	MANUFACTURERS
		Access systems
P.	Exterior Grade Compact laminate (HPL)	Fundermax, Greenlam Clads or approved equivalent

Note: In case of items not covered in the above list, the material shall be procured after approval of Client as per the standard material available in the market and having BIS certification mark.

11. LABORATORY EQUIPMENT

Sl. No.	EQUIPMENT	MAKE
1.	Muffle furnace	BYSAKH / THERELEK / NASKAR/ CARBOLITE / NABERTHERM
2.	Drying oven	BYSAKH / THERELEK / NASKAR/ CARBOLITE / NABERTHERM
3.	Hot plate	NASKAR / SICO / SD HARDSON / REMI/ RELITECH
4.	Hot plate – cum –magnetic stirrer	NASKAR / SICO / SD HARDSON / REMI/ RELITECH
5.	Digital pH meter	METTLER / HACH / THERMO FISHER/ METROHM / WTW
6.	Digital conductivity meter	METTLER / HACH / THERMO FISHER/ METROHM / WTW
7.	Turbidity meter	HANNA / WTW / THERMO FISHER/ HACH
8.	Water bath	BOROSIL/RAMKEN/ PUJA SCIENTIFIC / SWAN / RELITECH
9.	Water distillation still	THERMO FISHER / POOJA SCIENTIFIC / BIONICS SCIENTIFIC
10.	Precision analytical balance	METTLER/SARTORIOUS/ AVERY / WENSAR
11.	Platform Balance	METTLER/SARTORIOUS/ AVERY / WENSAR
12.	Electronic top loading balance	METTLER/SARTORIOUS/ AVERY / WENSAR
13.	Spectrographic sample cut off machine	METATECH / CHENNAI METCO / UNIMAT / HERZOG
14.	Grinding-cum-polishing machine	METATECH/ CHENNAI METCO/ UNIMAT
15.	Microwave digestion system	ANALYTIK JENA / MILESTONE S.R.L. / CEM CORPORATION
16.	Atomic absorption spectrometer	SHIMADZU/ AGILENT/ PERKIN ELMER/ THERMO FISHER /

© 2022 MECON Limited All rights reserved

Sl. No.	EQUIPMENT	MAKE
		ANALYTIK JENA
17.	Optical emission spectrometer	THERMO FISHER/SHIMADZU/ BRUKER / SPECTRO
18.	Hydrogen analyser	LECO/BRUKER/THERMOFISHER/CIC/ ELTRA / HORIBA
19.	Inclusion Measurement and Quantification Analysis PoDFA	ABB
20.	Portable X-Ray Fluorescence Spectrometer	THERMO FISHER/ PANALYTICAL/ BRUKER
21.	Laboratory glassware & reagents	RANKEM / FISHER SCIENTIFIC / MERCK/ BOROSIL
22.	Laboratory furniture including double analytical table and fume chamber	GODREJ/ AAKAR SCIENTIFIC / GORDHANDAS DESAI / BHATIA ENGG. WORKS

© 2022 MECON Limited All rights reserved